(PC4146) 955 Combine

(1F18) "D"WARNING EMBLEM
PANNEAU D
"D"SCHILD
SEGNALE"D"
PLACA DE AVISO CON"D"
"D"SKYLT

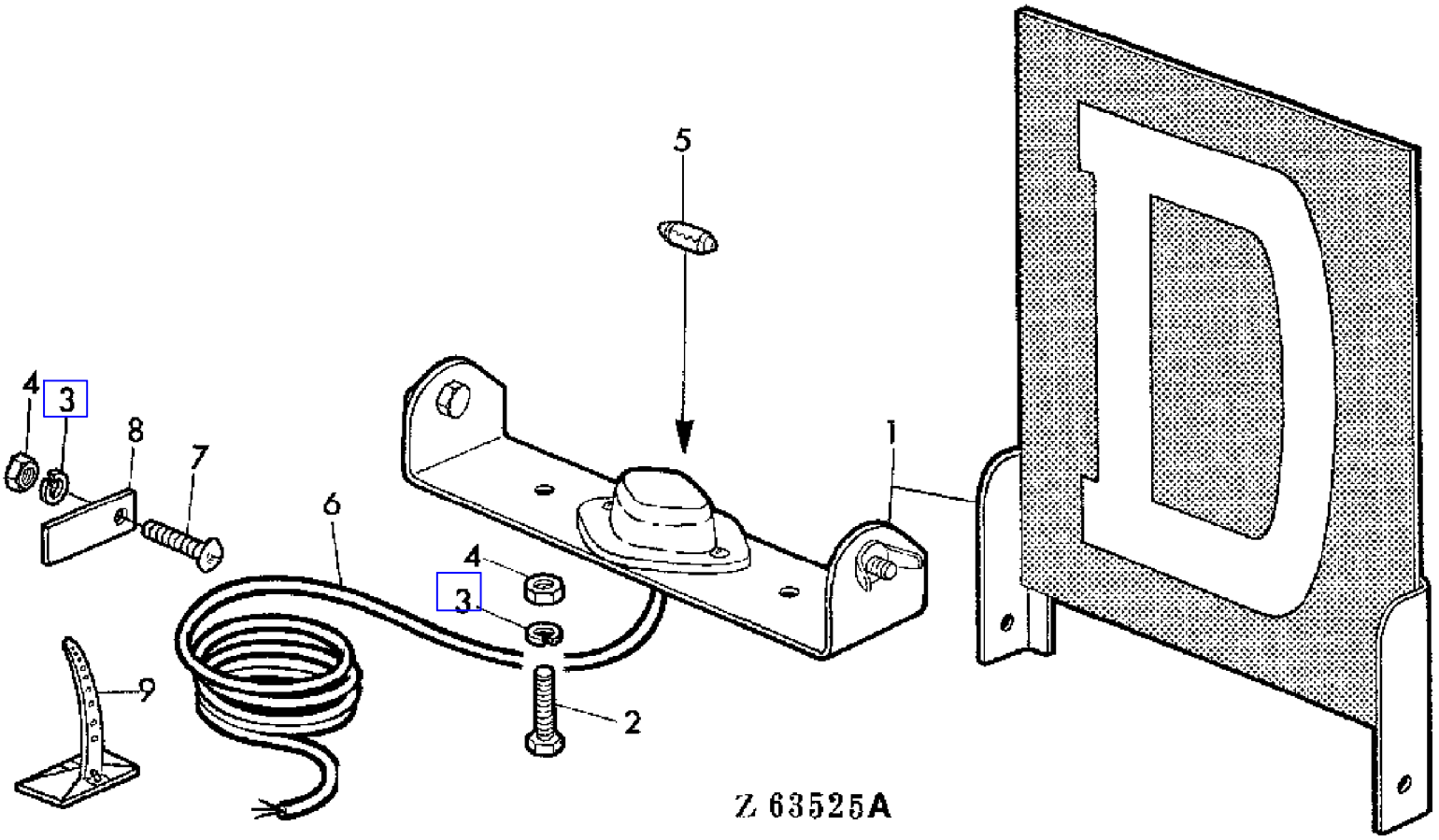

COPYRIGHT©1994 - 2008 DEERE & COMPANY Moline, Illinois All rights reserved

(PC4146) 955 Combine

(1F18) "D"WARNING EMBLEM
PANNEAU D
"D"SCHILD
SEGNALE"D"
PLACA DE AVISO CON"D"
"D"SKYLT

KEY	PART NO.	PART NAME	QTY	SERIAL NO.	955	REMARKS
1	AZ11131	SIGN	1		X	ASSY, AR
2	19M7077	CAP SCREW	2		X	M6X20
3	12M7012	LOCK WASHER	2		X	6MM
4	14M7027	NUT	2		X	M6
5	57M6274	BULB	1		X	12V 5W
6	AZ12750	WIRING LEAD	1		X	
7	21M7086	SCREW	1		X	M6X20
8	Z23521	CLAMP	AR		X	
9	Z36647	CLAMP	AR		X	

COPYRIGHT©1994 - 2008 DEERE & COMPANY Moline, Illinois All rights reserved

(2A25) 3 SPOOL CONTROL VALVE
DISTRIBUTEUR A 3 ELEMENTS
3 FACH STEUERGERAET
DISTRIBUTORE 3 STELE
VALVULA DE MANDO DE 3 EMBOLOS DE DISTRIBUCION
3 SPOLIG MANOVERVENTIL

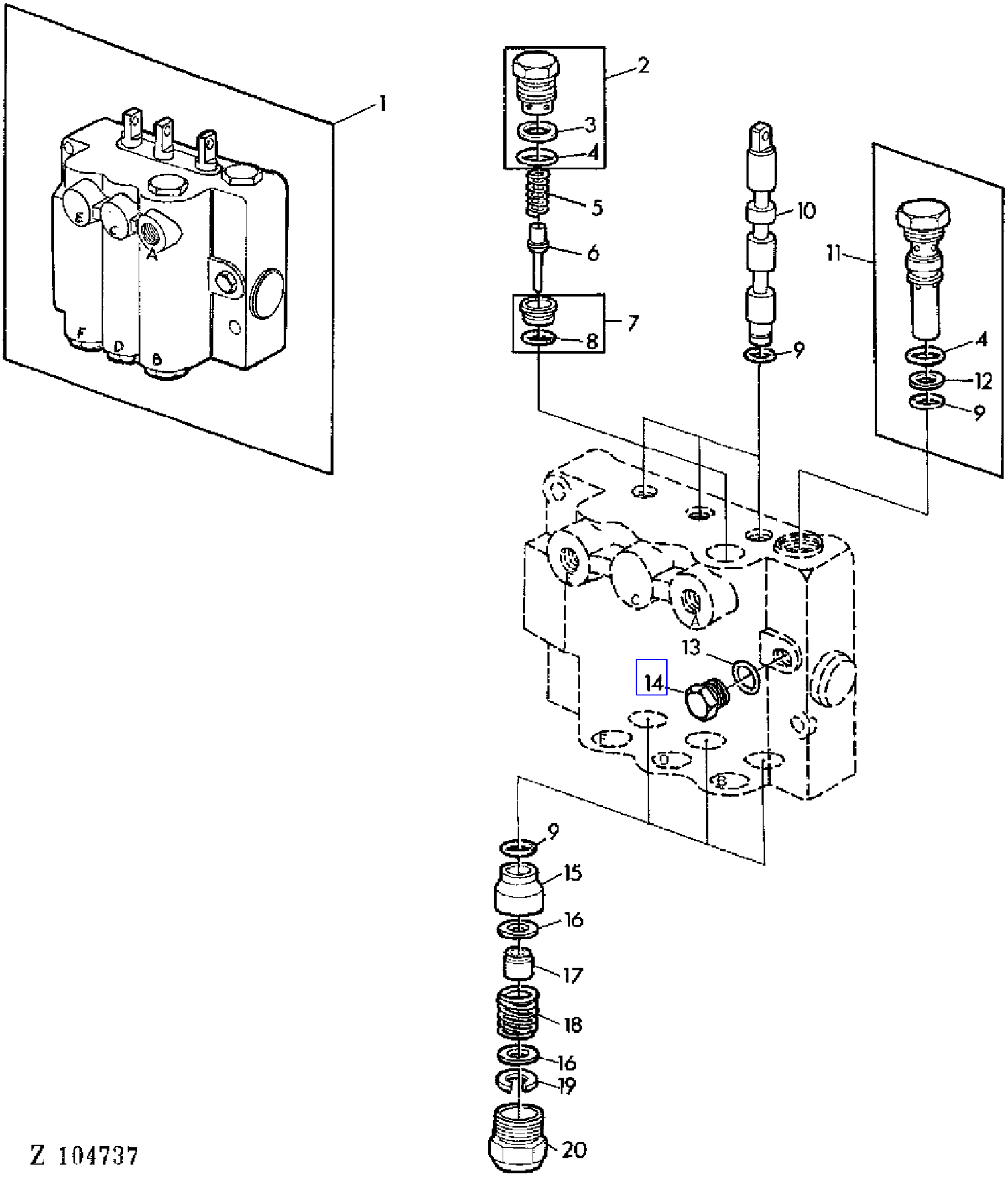

COPYRIGHT©1994 - 2008 DEERE & COMPANY Moline, Illinois All rights reserved

(2A25) 3 SPOOL CONTROL VALVE
DISTRIBUTEUR A 3 ELEMENTS
3 FACH STEUERGERAET
DISTRIBUTORE 3 STELE
VALVULA DE MANDO DE 3 EMBOLOS DE DISTRIBUCION
3 SPOLIG MANOVERVENTIL

KEY	PART NO.	PART NAME	QTY	SERIAL NO.	955	REMARKS
1	AZ33489	CONTROL VALVE	1		X	(A) ASSY
2	AZ33504	PLUG	1		X	
3	H35230	BACK-UP RING	1		X	
4	T13119	O-RING	AR		X	
5	N111493	SPRING	1		X	
6	AN30940	POPPET	1		X	
7	AZ17996	VALVE SEAT INSERT	1		X	
8	R27166	O-RING	1		X	
9	R375R	O-RING	7		X	
10	.....	SPOOL VALVE	7		X	NSEP
11	AH63330	RELIEF VALVE	1		X	
12	H63357	BACK-UP RING	1		X	
13	R26287	O-RING	1		X	
14	R31631	DRAIN PLUG	1		X	
15	N111488	BUSHING	3		X	
16	N31767	WASHER	6		X	
17	H62801	BUSHING	3		X	
18	H60819	SPRING	3		X	
19	32244	SNAP RING	3		X	
20	AH78788	PLUG	3		X	
..	AZ24156	KIT	1		X	KIT, INCL KEYS 3,4,8,9,12,13 GRID 2A25,2,7,8,10,11, GRID 2B2

(A) WITHOUT ORIFICES
SANS LIMITEUR
OHNE DROSSEL
SENZA ORIFICI
SIN LIMITADOR
UTAN STRYPNINGAR

COPYRIGHT©1994 - 2008 DEERE & COMPANY Moline, Illinois All rights reserved

(2B02) 3 SPOOL CONTROL VALVE
DISTRIBUTEUR A 3 ELEMENTS
3 FACH STEUERGERAET
DISTRIBUTORE 3 STELE
VALVULA DE MANDO DE 3 EMBOLOS DE DISTRIBUCION
3 SPOLIG MANOVERVENTIL

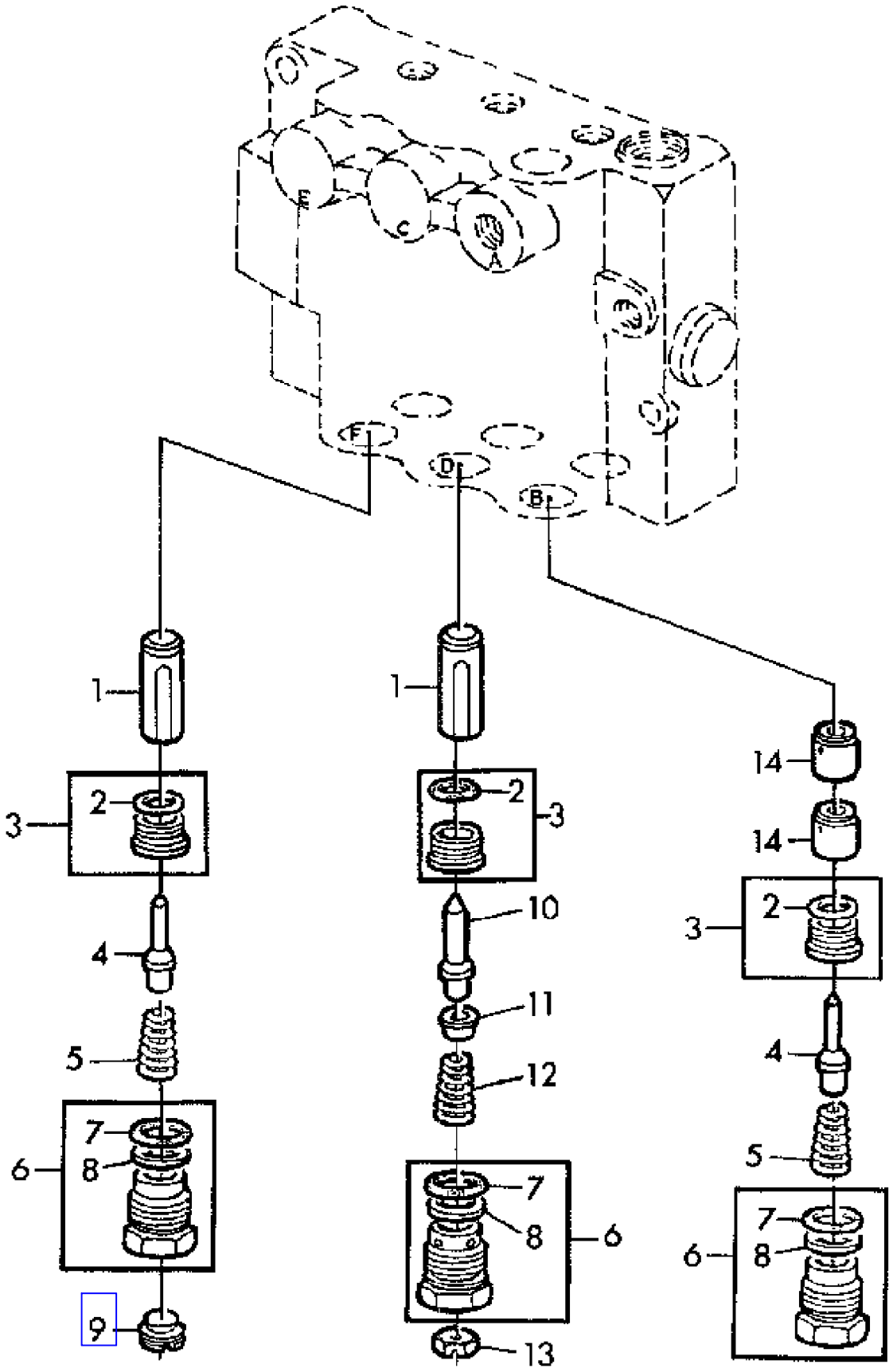

COPYRIGHT©1994 - 2008 DEERE & COMPANY Moline, Illinois All rights reserved

(2B02) 3 SPOOL CONTROL VALVE
DISTRIBUTEUR A 3 ELEMENTS
3 FACH STEUERGERAET
DISTRIBUTORE 3 STELE
VALVULA DE MANDO DE 3 EMBOLOS DE DISTRIBUCION
3 SPOLIG MANOVERVENTIL

KEY	PART NO.	PART NAME	QTY	SERIAL NO.	955	REMARKS
1	Z43510	PISTON	2		X	
2	R27166	O-RING	1		X	
3	AZ17996	VALVE SEAT INSERT	3		X	
4	AN30940	POPPET	2		X	
5	N111493	SPRING	2		X	
6	AZ33505	ADAPTER	3		X	
7	T13119	O-RING	6		X	
8	H35230	BACK-UP RING	6		X	
9	Z23364	ORIFICE	1		X	ID = 1,4 MM
10	AH80223	POPPET	1		X	
11	H84537	GUIDE	1		X	
12	H81705	SPRING	1		X	
13	Z44130	RESTRICTOR	1		X	(AR) ID = 2,5 MM (SUB FOR Z23713)
	Z44135	RESTRICTOR	1		X	(AR) ID = 3,0 MM (SUB FOR Z40697)
14	Z43508	PISTON	2		X	

COPYRIGHT©1994 - 2008 DEERE & COMPANY Moline, Illinois All rights reserved

(2H04) ACCESSORIES
ACCESSOIRES
ZUBEHOERTEILE
ACCESSORI
ACCESORIOS
TILLBEHORSDELAR

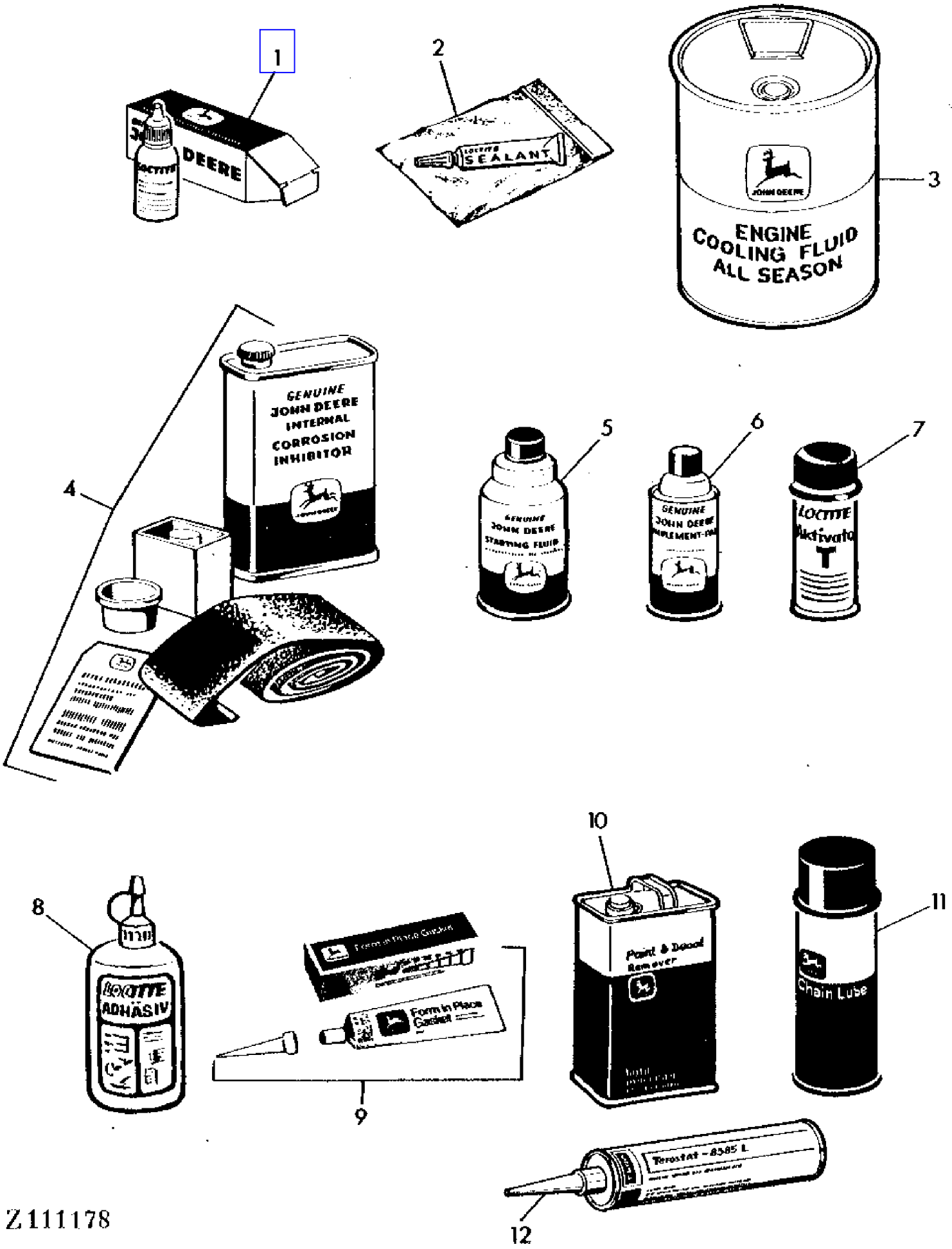

COPYRIGHT©1994 - 2008 DEERE & COMPANY Moline, Illinois All rights reserved

(2H04) ACCESSORIES
ACCESSOIRES
ZUBEHOERTEILE
ACCESSORI
ACCESORIOS
TILLBEHORSDELAR

KEY	PART NO.	PART NAME	QTY	SERIAL NO.	955	REMARKS
1	AT14264	SEALANT	AR		X	(A) LOCTITE SEALANT, 59 CCM (2FL.02) PACKG (5)
	AT26340	SEALANT	AR		X	(B) LOCTITE SEALANT, 59 CCM (2FL.02) PACKG (5)
2	AT14927	SEALANT	AR		X	(A) LOCTITE SEALANT, 2 CCM PACKG (10)
3	DD14134	COOLANT	AR		X	5L (1,3.U.S.GAL) (SUB FOR T19566 APPL)
	DD14135	COOLANT	AR		X	20L (5,3.U.S.GAL) (SUB FOR T19566 APPL)
	DD14136	COOLANT	AR		X	60L (15,9.U.S.GAL) (SUB FOR T19566 APPL)
	DD14137	COOLANT	AR		X	210L (55,5.U.S.GAL) (SUB FOR T19566 APPL)
4	AR41785	KIT	AR		X	KIT
5	AR27814	STARTING FLUID	AR		X	PACKG (12)
6	L94772	PAINT	AR		X	GRUEN, GREEN, VERT, VERDE, GROEN
7	AL25914	ACTIVATOR	1		X	
8	AL25913	ADHESIVE	1		X	
9	TY15130	SEALANT	1		X	3 OZ,90 G (SUB FOR PT94)
10	L94741	PAINT	1		X	(1L) GRUEN, GREEN, VERT, VERDE, GROEN
	L94743	PAINT	1		X	(1L) GELB, YELLOW, JAUN, GIALLO, AMARILLO, GUL
11	TY6240	LUBRICANT	AR		X	15 OZ, PACKG (12)
12	L41074	SEALANT	1		X	TEROSTAT, 310 CCM

(A) HIGH VISCOSITY
VISCOSITE ELEVEE
HOHE VISKOSITAET
ALTA VISCOSITA
ALTA VISCOSIDAD
HOG VISKOSITET

(B) LOW VISCOSITY
VISCOSITE BASSE
NIEDRIGE VISKOSITAET
BASSA VISCOSITA
BAJA VISCOSIDAD
LAG VISKOSITET

COPYRIGHT©1994 - 2008 DEERE & COMPANY Moline, Illinois All rights reserved

(3B08) ADJUSTING SPINDLE FOR VARIABLE SHEAVES CYLINDER
COMMANDE DU VARIATEUR DU BATTEUR
VERSTELLSPINDEL FUER DRESCHTROMMELVARIATOR
ASTA REGISTRABILE PER VARIATORE DEL BATTITORE
HUSILLO DE AJUSTE PARA EL VARIADOR DEL CILINDRO DESGRANADOR
JUSTERSPINDEL FOER CYLINDERVARIATOR

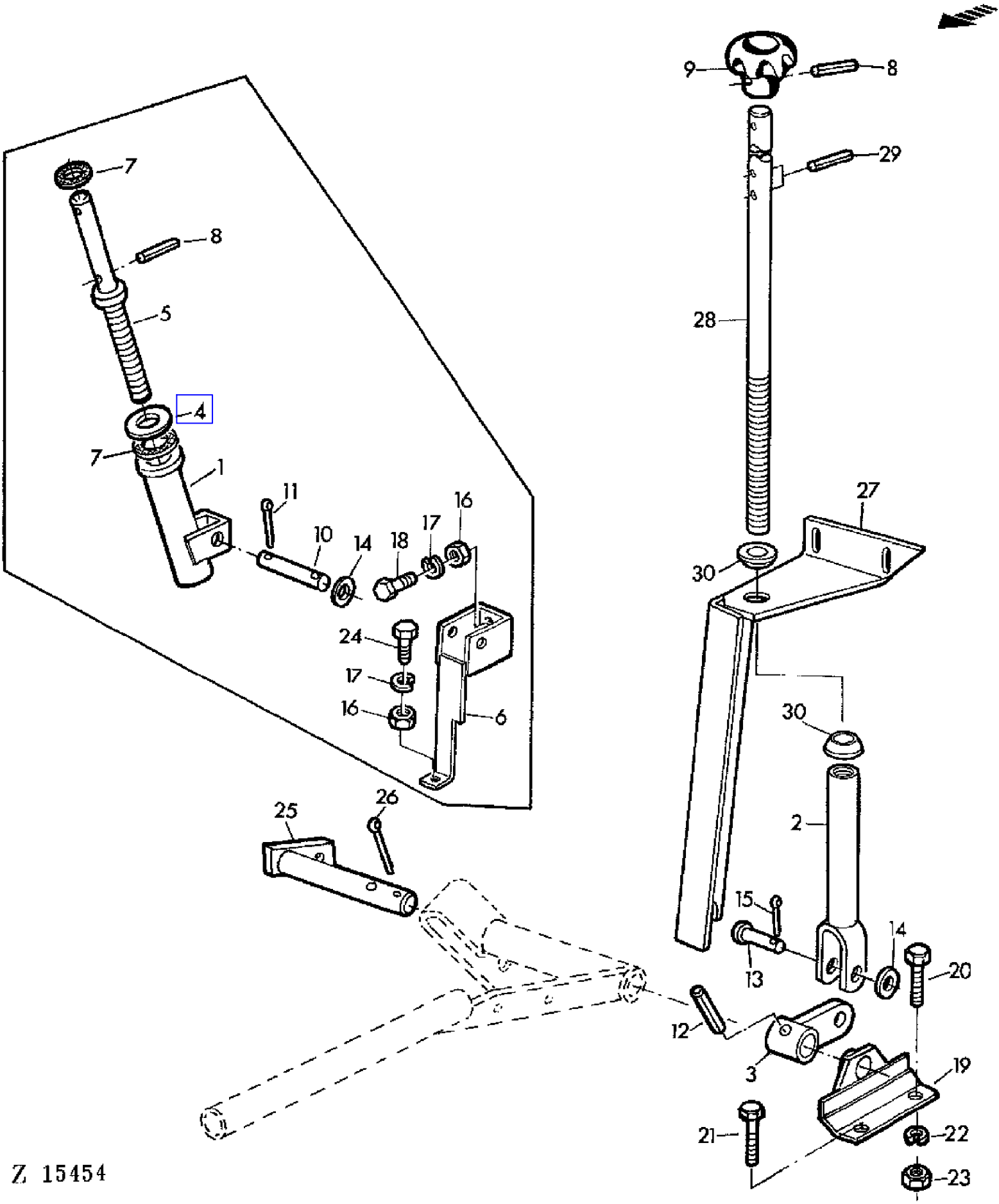

COPYRIGHT©1994 - 2008 DEERE & COMPANY Moline, Illinois All rights reserved

(3B08) ADJUSTING SPINDLE FOR VARIABLE SHEAVES CYLINDER
COMMANDE DU VARIATEUR DU BATTEUR
VERSTELLSPINDEL FUER DRESCHTROMMELVARIATOR
ASTA REGISTRABILE PER VARIATORE DEL BATTITORE
HUSILLO DE AJUSTE PARA EL VARIADOR DEL CILINDRO DESGRANADOR
JUSTERSPINDEL FOER CYLINDERVARIATOR

KEY	PART NO.	PART NAME	QTY	SERIAL NO.			955	REMARKS
1	AZ22440	SLEEVE	1		-	XXXX	X	
2	AZ25481	ADJUSTER	1	XXXX	-	XXXX	X	
	AZ19450	FORK	1		-	XXXX	X	
	AZ28552	ADJUSTER	1	XXXX	-		X	
3	AZ23841	LEVER	1		-	XXXX	X	
	AZ25480	LEVER	1	XXXX	-		X	
4	L18946	WASHER	1		-	XXXX	X	
5	AZ19452	LIFT LINK	1		-	XXXX	X	
6	AZ19453	BRACKET	1		-	XXXX	X	
7	Z32829	WASHER	2		-	XXXX	X	
8	34M7031	SPRING PIN	2				X	5X24MM
9	Z30841	KNOB	1				X	
10	44M7021	PIN	1		-	XXXX	X	12X75X68MM (SUB FOR Z30880)
11	11M7011	COTTER PIN	2		-	XXXX	X	3X15MM
12	34M7046	SPRING PIN	1				X	8X30MM
13	46M4901	PIN	1				X	12H 11X40X35MM
14	24M7043	WASHER	4				X	12MM
15	11M7020	COTTER PIN	3				X	4X25MM
16	14M7029	NUT	3				X	M8
17	12M7008	LOCK WASHER	3				X	8MM
18	19M7163	CAP SCREW	2				X	M8X25
19	AZ18547	BRACKET	2				X	
20	19M7167	CAP SCREW	2				X	M10X25
21	19M7288	CAP SCREW	2				X	M8X30
22	12M7013	LOCK WASHER	2				X	10MM
23	14M7140	NUT	2				X	M10
24	19M7298	CAP SCREW	1				X	M8X35
25	AZ18542	SHAFT	1				X	
26	11M7029	COTTER PIN	1				X	5X40MM
27	AZ25482	BRACKET	1	XXXX	-		X	
	AZ25625	SLEEVE	1	XXXX	-		X	(A)
28	Z36582	ADJUSTER	1	XXXX	-		X	
29	34M7032	SPRING PIN	2	XXXX	-		X	5X28MM
30	47M7006	WASHER	2	XXXX	-		X	17MM

(A) FOR TOP SACKER
POUR ENSACHEUR SUPERIEUR
FUER TOP-SACKER
PER INSACCATORE SUPERIORE
PARA ENSACADOR SUPERIOR
FOR OVRE INSACKNINGSPLATTFORM

COPYRIGHT©1994 - 2008 DEERE & COMPANY Moline, Illinois All rights reserved

(3E14) AIR CONDITIONING COVERS
CACHES DE LA CLIMATISATION
VERKLEIDUNG-KLIMAANLAGE
RIVESTIMENTI,IMPIANTO DELL'ARIA CONDIZIONATA
REVESTIMIENTOS,SISTEMA DE AIRE ACONDICIONADO
BEKLADNAD FOR LUFTKONDITIONERINGSSYSTEM

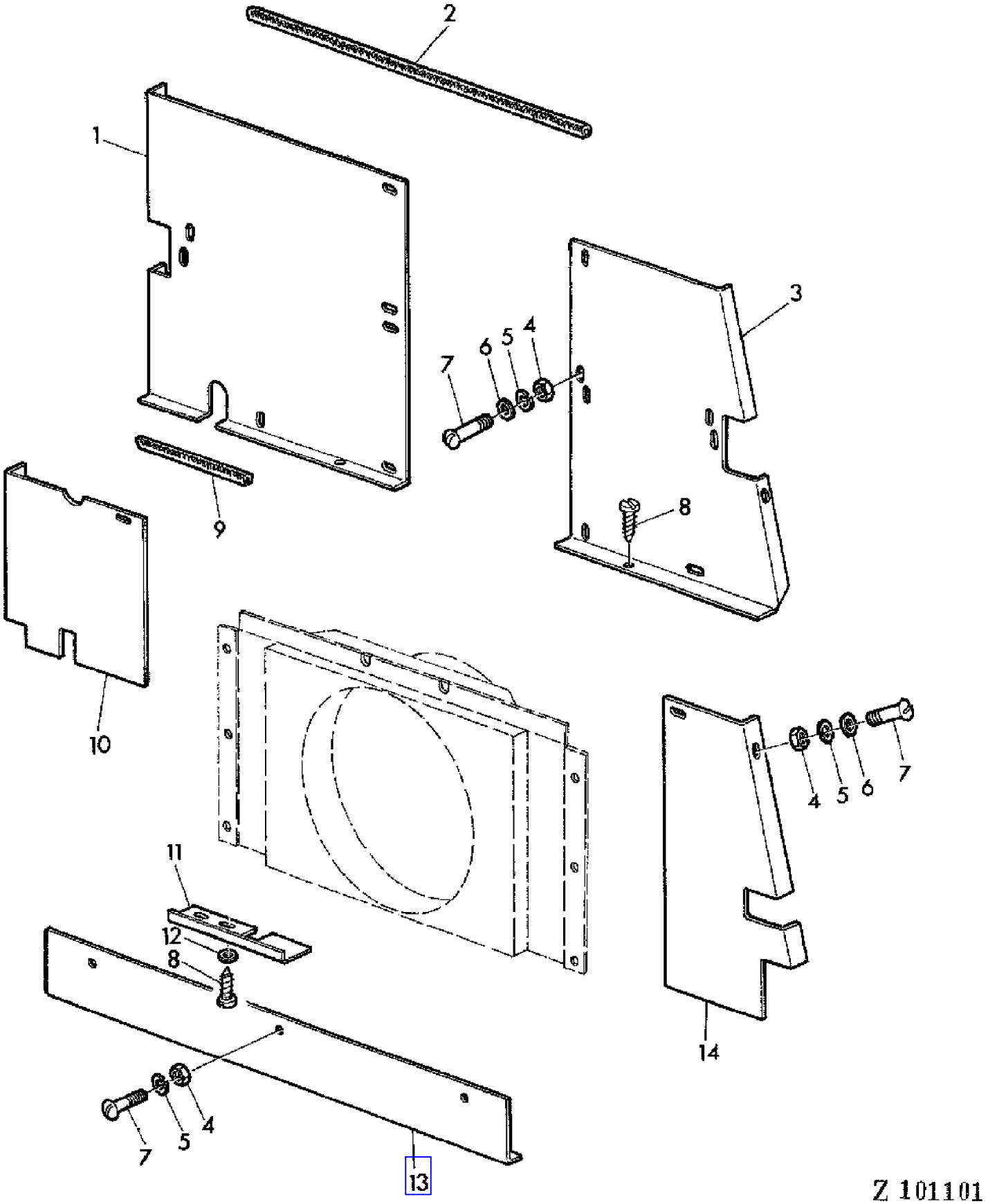

COPYRIGHT©1994 - 2008 DEERE & COMPANY Moline, Illinois All rights reserved

(3E14) AIR CONDITIONING COVERS
CACHES DE LA CLIMATISATION
VERKLEIDUNG-KLIMAANLAGE
RIVESTIMENTI,IMPIANTO DELL'ARIA CONDIZIONATA
REVESTIMIENTOS,SISTEMA DE AIRE ACONDICIONADO
BEKLADNAD FOR LUFTKONDITIONERINGSSYSTEM

KEY	PART NO.	PART NAME	QTY	SERIAL NO.	955	REMARKS
1	Z42152	SHIELD	1		X	
2	Z37777	GUARD	1		X	
3	Z42153	SHIELD	1		X	
4	14M7027	NUT	AR		X	M6
5	12M7012	LOCK WASHER	AR		X	6MM
6	24M7054	WASHER	AR		X	6,4MM
7	21M7031	SCREW	AR		X	M6X15
8	37M7029	SCREW	AR		X	5,5X13MM
9	Z40677	GUARD	1		X	(SUB FOR Z35897)
10	Z42155	SHIELD	1		X	
11	Z42158	SHIELD	1		X	
12	24M7087	WASHER	AR		X	5,5MM
13	Z42156	SHIELD	1		X	
14	Z42154	SHIELD	1		X	

COPYRIGHT©1994 - 2008 DEERE & COMPANY Moline, Illinois All rights reserved

(1C18) AIR INTAKE MANIFOLD
PIPE D'ADMISSION
ANSAUGKRUEMMER
COLLETTORE D'ASPIRAZIONE
TUBO DE ADMISSION DE AIRE
LUFTINTAG

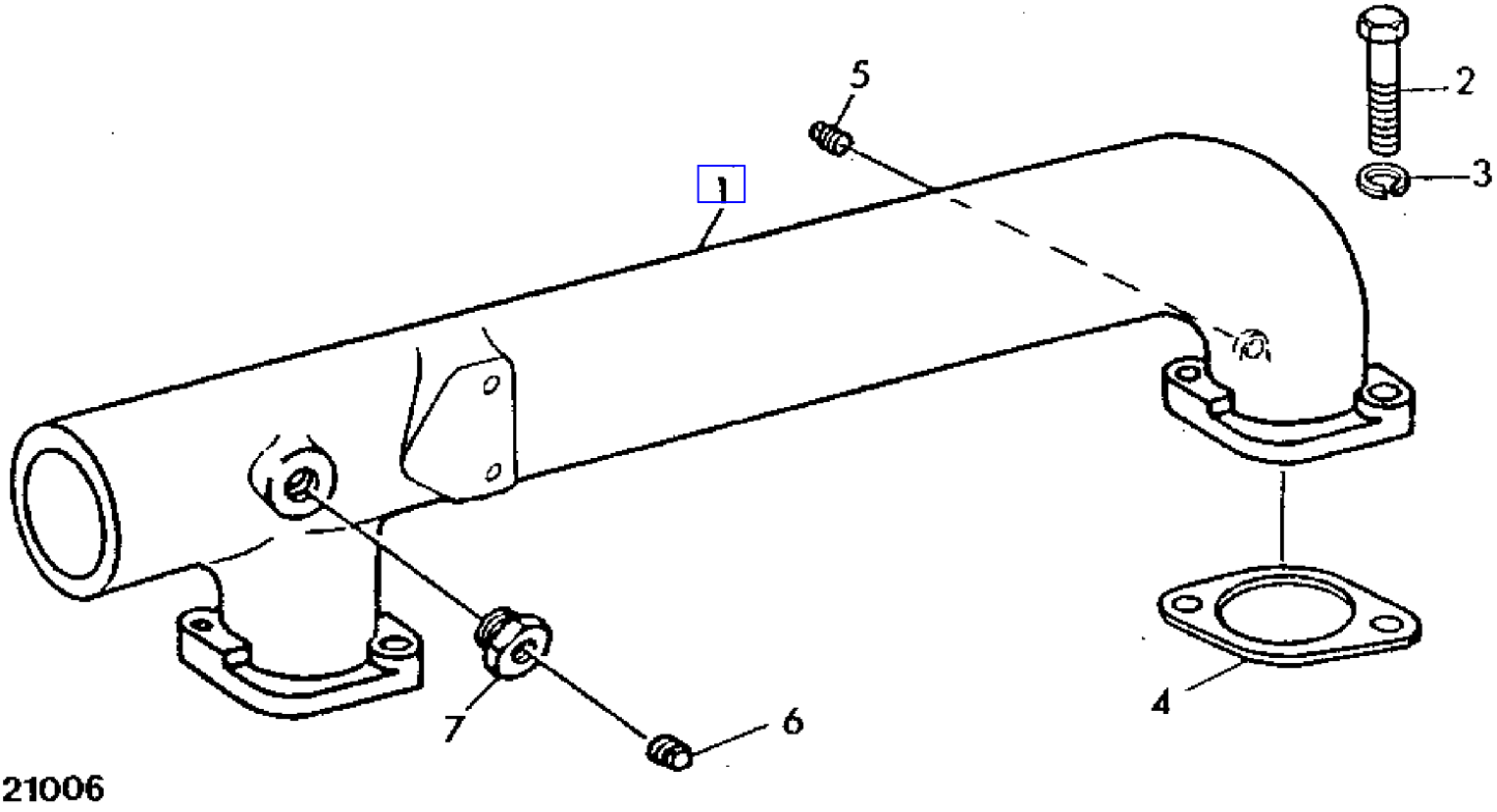

COPYRIGHT©1994 - 2008 DEERE & COMPANY Moline, Illinois All rights reserved

(1C18) AIR INTAKE MANIFOLD
PIPE D'ADMISSION
ANSAUGKRUEMMER
COLLETTORE D'ASPIRAZIONE
TUBO DE ADMISSION DE AIRE
LUFTINTAG

KEY	PART NO.	PART NAME	QTY	SERIAL NO.	955	REMARKS
1	T29676	INTAKE MANIFOLD	1		X	
2	19H988	CAP SCREW	4		X	3/8"X1-1/4"
3	24H1303	WASHER	4		X	13/32"X11/16"X0.060"
4	T20159	GASKET	2		X	
5	15H558	PIPE PLUG	AR		X	1/8"
6	15H255	PIPE PLUG	AR		X	3/8"
7	T27986	FITTING	1		X	

COPYRIGHT©1994 - 2008 DEERE & COMPANY Moline, Illinois All rights reserved

(PC4146) 955 Combine

(1D16) AIR PRE-CLEANER
PREFILTRE A AIR
LUFTVORFILTER
PREFILTRO ARIA
PREPURIFICADOR DE AIRE
LUFTFORRENARE

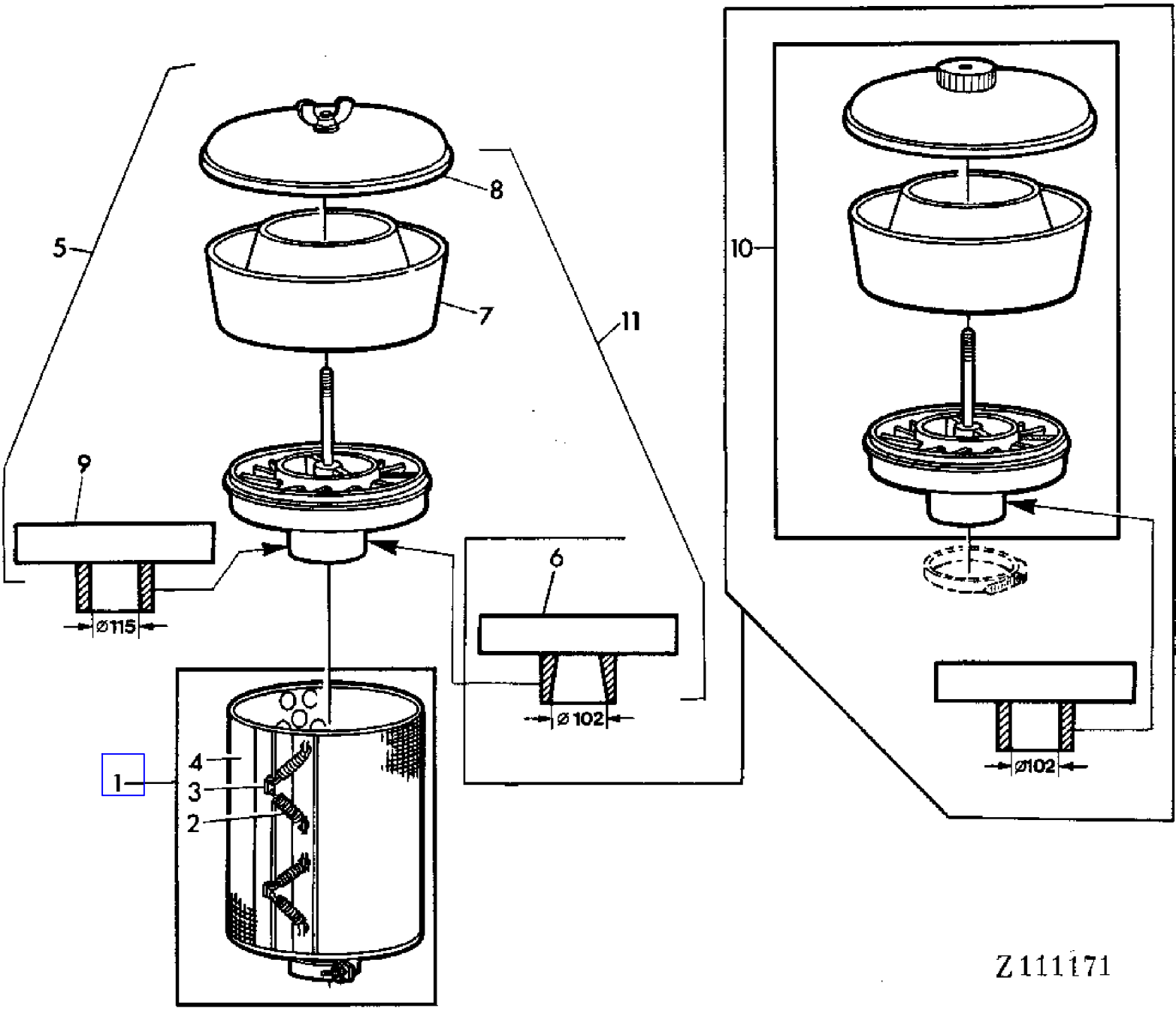

COPYRIGHT©1994 - 2008 DEERE & COMPANY Moline, Illinois All rights reserved

(PC4146) 955 Combine

(1D16) AIR PRE-CLEANER
PREFILTRE A AIR
LUFTVORFILTER
PREFILTRO ARIA
PREPURIFICADOR DE AIRE
LUFTFORRENARE

KEY	PART NO.	PART NAME	QTY	SERIAL NO.			955	REMARKS
1	AR46067	SCREEN	AR		-	014053	X	(FOR AH85336)
	AZ25918	SCREEN	1	014054	-		X	(FOR AZ21733)
2	R21644	SPRING	4		-	014053	X	KIT (2)
3	R21645	RETAINER	2		-	014053	X	KIT (2)
4	AR27808	SCREEN	1		-	014053	X	
5	AZ21733	PRESCREENER	1	014054	-		X	ASSY, INCL KEYS 7-9 (FOR AZ25918)
6	AH61828	BASE	1		-	014053	X	
7	L28519	BOWL	1				X	
8	AL19921	COVER	1				X	
9	AZ21744	PRESCREENER	1	014054	-		X	
10	AH85336	PRESCREENER	1		-	014053	X	(FOR AR46067) (SUB FOR AH61636)
11	AH61636	PRESCREENER	1		-	014053	X	ASSY (ORD AH85336)

COPYRIGHT©1994 - 2008 DEERE & COMPANY Moline, Illinois All rights reserved

(1E14) ALTERNATOR 33 AMPS
ALTERNATEUR 33A
DREHSTROM-GENERATOR 33A
ALTERNATORE 33A
ALTERNADOR 33A
VAXELSTROMSGENERATOR 33A

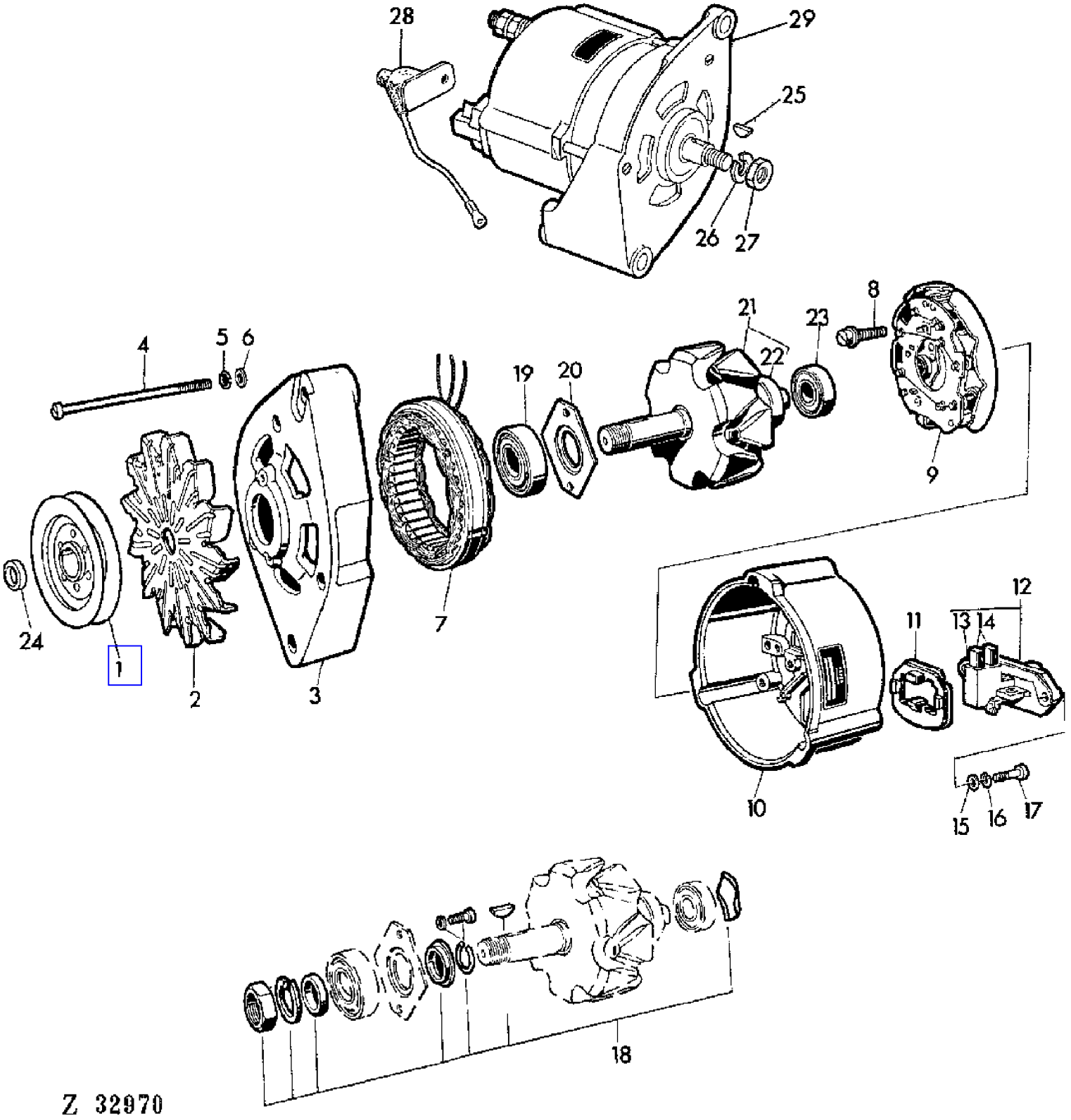

COPYRIGHT©1994 - 2008 DEERE & COMPANY Moline, Illinois All rights reserved

(PC4146) 955 Combine

(1E14) ALTERNATOR 33 AMPS
ALTERNATEUR 33A
DREHSTROM-GENERATOR 33A
ALTERNATORE 33A
ALTERNADOR 33A
VAXELSTROMSGENERATOR 33A

KEY	PART NO.	PART NAME	QTY	SERIAL NO.	955	REMARKS
1	Z10965	PULLEY	1		X	(ORD W/ KEY 24)
2	L29167	FAN	1		X	
3	L29159	CASE	1		X	
4	L32147	SCREW	3		X	(SUB FOR L29166)
5	12M7011	LOCK WASHER	3		X	5MM
6	24M7027	WASHER	3		X	5,3MM
7	AZ24487	STATOR	1		X	
8	L29163	SCREW	3		X	
9	AL27374	RECTIFIER	1		X	(SUB FOR AZ24486)
10	AZ24488	CASE	1		X	
11	Z35542	INSULATOR	1		X	
12	AZ24490	CARBON BRUSH HOLDER	1		X	INCL KEYS 13,14
13	L27339	SPRING	2		X	
14	AL27373	CARBON BRUSH CONDUCTOR	1		X	KIT
15	L29162	WASHER	2		X	
16	12M1622	LOCK WASHER	2		X	4MM
17	AL19208	SCREW	2		X	
18	AL23857	KIT	1		X	KIT
19	AL23852	BEARING	1		X	
20	L29161	PLATE	1		X	
21	AZ24489	ROTOR	1		X	(W/ L29160)
22	L29160	RING	1		X	
23	AL23851	BEARING	1		X	
24	Z32101	WASHER	1		X	
25	26M4223	SHAFT KEY	1		X	4X5MM
26	12M7009	LOCK WASHER	1		X	14MM
27	14M7156	NUT	1		X	M14X1,5
28	AZ24485	CAPACITOR	1		X	
29	AZ23575	ALTERNATOR	1		X	R.BOSCH-14V-33A,0120339512, INCL KEYS 25-28

COPYRIGHT©1994 - 2008 DEERE & COMPANY Moline, Illinois All rights reserved

(1E16) ALTERNATOR 55 AMPS.
ALTERNATEUR 55 A
DREHSTROM-GENERATOR 55 A
ALTERNATORE 55 A
ALTERNADOR 55 A
VAXELSTROMSGENERATOR 55 A

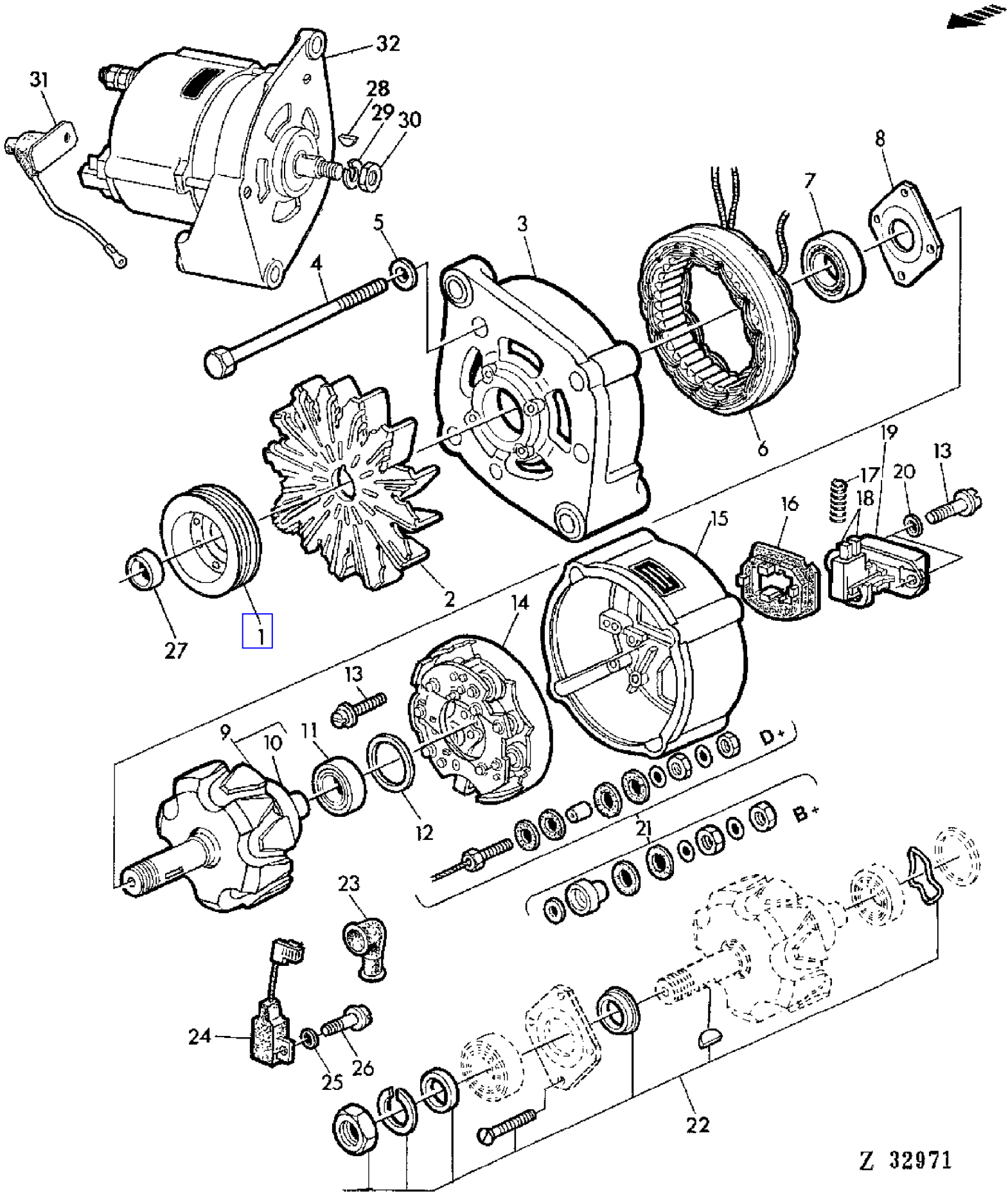

COPYRIGHT©1994 - 2008 DEERE & COMPANY Moline, Illinois All rights reserved

(PC4146) 955 Combine

(1E16) ALTERNATOR 55 AMPS.
ALTERNATEUR 55 A
DREHSTROM-GENERATOR 55 A
ALTERNATORE 55 A
ALTERNADOR 55 A
VAXELSTROMSGENERATOR 55 A

KEY	PART NO.	PART NAME	QTY	SERIAL NO.	955	REMARKS
1	Z10965	PULLEY	1		X	
2	L33993	FAN	1		X	
3	AL30414	CASE	1		X	
4	21M7241	SCREW	4		X	M5X110
5	24M7027	WASHER	4		X	5,3X10X1MM
6	AL30422	STATOR	1		X	
7	JD10036	BALL BEARING	1		X	
8	L33985	FLANGE	1		X	
9	AL30416	ROTOR	1		X	(W/ L33986)
10	L33986	RING	1		X	
11	AL30417	BEARING	1		X	
12	L33987	O-RING	1		X	
13	21M7242	SCREW	3		X	M4X16
14	AL30419	DIODE HOLDER	1		X	
15	AL30418	HOUSING	1		X	
16	L33992	INSULATOR	1		X	
17	L33988	SPRING	2		X	
18	AL30421	CARBON BRUSH CONDUCTOR	1		X	KIT
19	AL30420	REGULATOR	1		X	
20	12M7031	LOCK WASHER	2		X	M4
21	AL30425	KIT	1		X	KIT
22	AL30424	SEAL KIT	1		X	KIT
23	L33994	TERMINAL NIPPLE	2		X	
24	AL30423	CAPACITOR	1		X	
25	12M7075	WASHER	1		X	5MM
26	21M7198	SCREW	1		X	M5X10
27	Z32101	WASHER	1		X	
28	26M4223	SHAFT KEY	1		X	4X5MM
29	12M7009	LOCK WASHER	1		X	14MM
30	14M7156	NUT	1		X	M14X1,5
31	AZ24485	CAPACITOR	1		X	
32	AZ26910	ALTERNATOR	1		X	R.BOSCH-14V-55A,A120421407, INCL KEYS 28-31

COPYRIGHT©1994 - 2008 DEERE & COMPANY Moline, Illinois All rights reserved

(PC4146) 955 Combine

(1E18) ALTERNATOR 65 AMPS
ALTERNATEUR 65A
DREHSTROM-GENERATOR 65A
ALTERNATORE 65A
ALTERNADOR 65A
VAXELSTROMSGENERATOR 65A

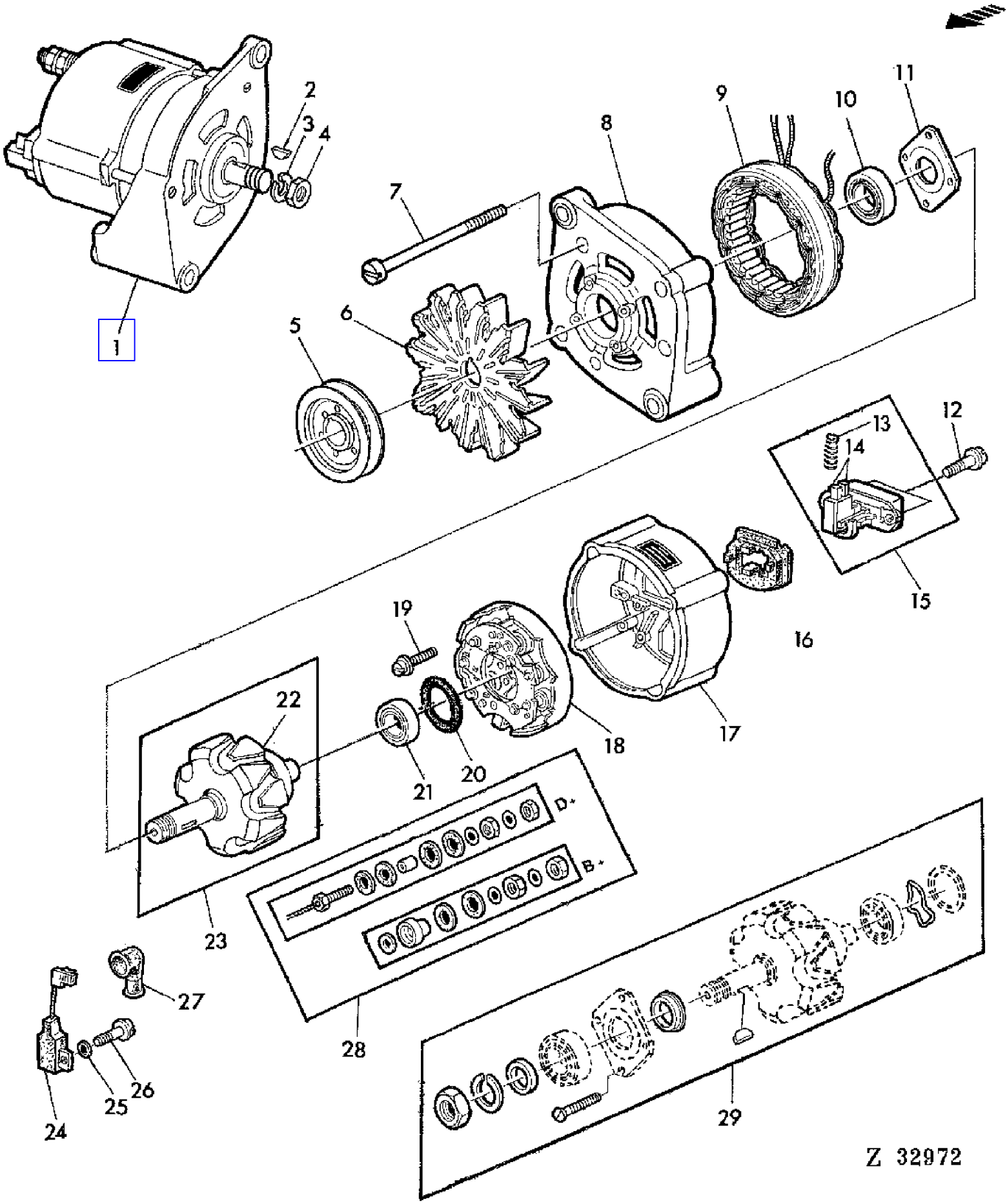

COPYRIGHT©1994 - 2008 DEERE & COMPANY Moline, Illinois All rights reserved

(PC4146) 955 Combine

(1E18) ALTERNATOR 65 AMPS
ALTERNATEUR 65A
DREHSTROM-GENERATOR 65A
ALTERNATORE 65A
ALTERNADOR 65A
VAXELSTROMSGENERATOR 65A

KEY	PART NO.	PART NAME	QTY	SERIAL NO.	955	REMARKS
1	AZ31316	ALTERNATOR	1		X	R.BOSCH 14V 65A,0 120 489 156 INCL KEYS 2-4,7-29
2	26M4223	SHAFT KEY	1		X	
3	12M7009	LOCK WASHER	1		X	14MM
4	14M7156	NUT	1		X	M14X1,5
5	Z10965	PULLEY	1		X	
6	L33993	FAN	1		X	
7	21M7241	SCREW	4		X	M5X110
8	AZ31706	BEARING	1		X	
9	AZ31709	STATOR	1		X	
10	AL30415	PLATE	1		X	
11	L27337	PLATE	1		X	
12	Z42047	SCREW	2		X	
13	Z42048	SPRING	2		X	
14	AL30421	CARBON BRUSH CONDUCTOR	1		X	
15	AZ31949	REGULATOR	1		X	INCL KEYS 13,14
16	L33992	INSULATOR	1		X	
17	AZ31707	BEARING	1		X	
18	AZ31708	RECTIFIER	1		X	
19	Z42049	SCREW	3		X	
20	L33987	O-RING	1		X	
21	AL30417	BEARING	1		X	
22	L33986	RING	1		X	
23	AL30416	ROTOR	1		X	INCL KEY 22
24	AL30423	CAPACITOR	1		X	
25	12M7011	LOCK WASHER	1		X	5MM
26	L33991	BOLT	1		X	
27	L33994	TERMINAL NIPPLE	1		X	
28	AL30425	KIT	1		X	
29	AL30424	SEAL KIT	1		X	

COPYRIGHT©1994 - 2008 DEERE & COMPANY Moline, Illinois All rights reserved

(1E20) ALTERNATOR DELCO REMY 72 AMPS
ALTERNATEUR DELCO REMY 72A
DREHSTROM-GENERATOR DELCO REMY 72A
ALTERNATORE DELCO REMY 72A
ALTERNADOR DELCO REMY 72A
VAXELSTROMSGENERATOR DELCO REMY 72A

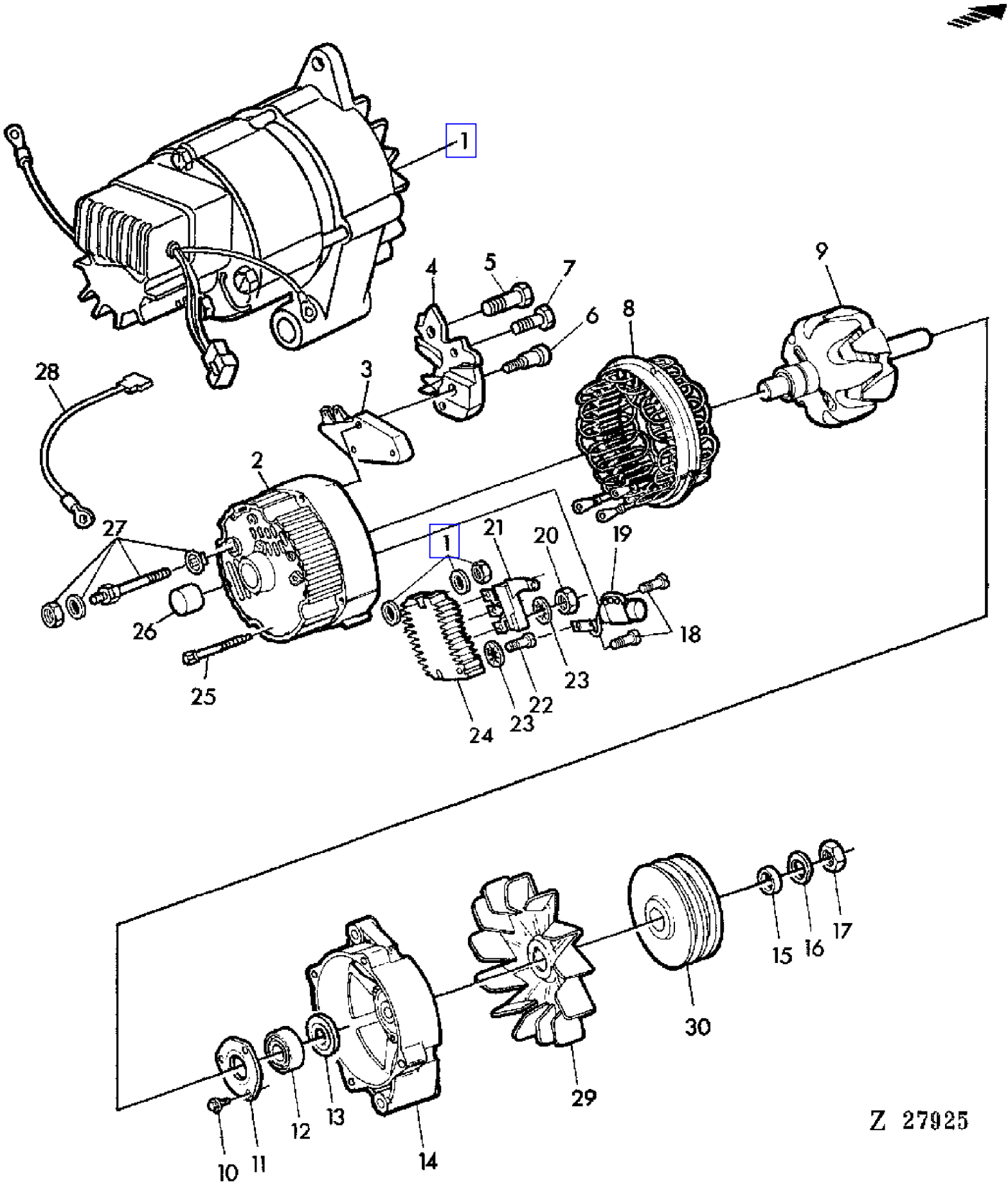

COPYRIGHT©1994 - 2008 DEERE & COMPANY Moline, Illinois All rights reserved

(PC4146) 955 Combine

(1E20) ALTERNATOR DELCO REMY 72 AMPS
ALTERNATEUR DELCO REMY 72A
DREHSTROM-GENERATOR DELCO REMY 72A
ALTERNATORE DELCO REMY 72A
ALTERNADOR DELCO REMY 72A
VAXELSTROMSGENERATOR DELCO REMY 72A

KEY	PART NO.	PART NAME	QTY	ENGINE SERIAL NO.	955	REMARKS
1	AR93446	ALTERNATOR	1		X	DELCO REMY 72A, INCL KEYS 1-28
2	R66301	HOUSING	1		X	REAR
3	AR55827	VOLTAGE REGULATOR	1		X	
4	AR85941	CARBON BRUSH HOLDER	1		X	ASSY
5	21H1376	SCREW	1		X	NO.8X1-1/4"
6	R66302	SCREW	1		X	
7	R51530	SCREW	2		X	
8	AR55837	STATOR	1		X	72AMP.
9	AR78093	ROTOR	1		X	
10	21H1301	SCREW	3		X	NO.10X1/2"
11	AR55836	RETAINER	1		X	
12	JD9449	BALL BEARING	1		X	
13	R51534	SHIM	1		X	
14	R51528	HOUSING	1		X	FRONT
15	R51533	ECCENTRIC LOCKING COLLAR	1		X	
16	T10745	WASHER	1		X	
17	R11049	NUT	1		X	
18	37H2	SCREW	2		X	NO.8X5/8"
19	AR55835	CAPACITOR	1		X	
20	14H605	NUT	3		X	NO.8
21	AR55831	DIODE	1		X	
22	21H1319	SCREW	1		X	NO.8X7/8"
23	12H290	WASHER	4		X	NO.8
24	AR55832	RECTIFIER	1		X	
25	R51535	BOLT	4		X	
26	AR77851	ROLLER BEARING	1		X	
27	AR55834	TERMINAL	1		X	KIT
28	AZ28724	POWER CORD	1		X	
29	R50659	FAN	1		X	
30	Z10965	PULLEY	1		X	

COPYRIGHT©1994 - 2008 DEERE & COMPANY Moline, Illinois All rights reserved

(1E12) ALTERNATOR-BRACKET
ALTERNATEUR-SUPPORT
DREHSTROM-GENERATOR-HALTER
SUPPORTO DEL ALTERNATORE
SOPORTE DEL ALTERNADOR
HALLARE FOR VAXELSTROMSGENERATOR

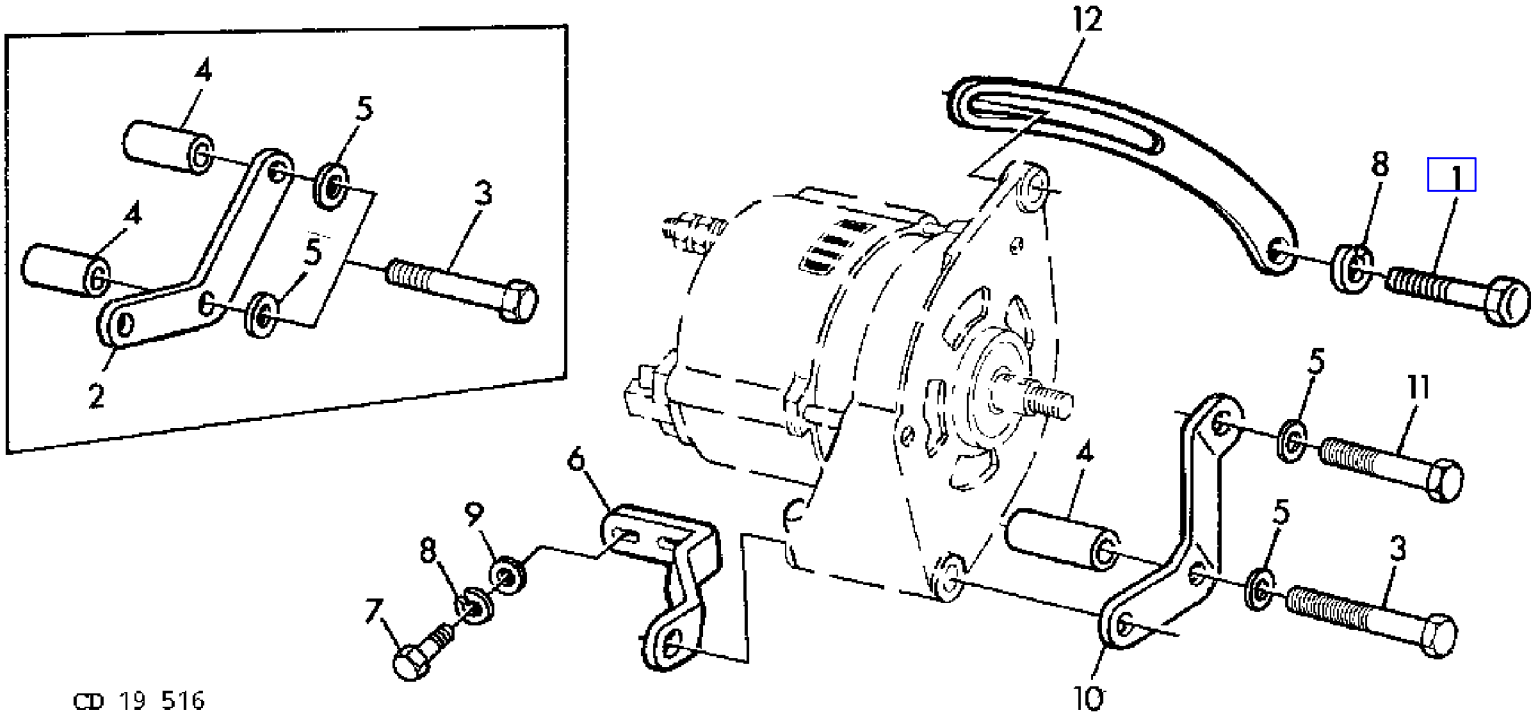

COPYRIGHT©1994 - 2008 DEERE & COMPANY Moline, Illinois All rights reserved

(1E12) ALTERNATOR-BRACKET
ALTERNATEUR-SUPPORT
DREHSTROM-GENERATOR-HALTER
SUPPORTO DEL ALTERNATORE
SOPORTE DEL ALTERNADOR
HALLARE FOR VAXELSTROMSGENERATOR

KEY	PART NO.	PART NAME	QTY	SERIAL NO.	955	REMARKS
1	19H1819	CAP SCREW	1		X	3/8"X2-1/8"
2	R60827	SUPPORT	1		X	FRONT (ORD R66794 W/ 19H1801)
3	19H2128	CAP SCREW	2		X	3/8"X3" (FOR R60827)
	19H2128	CAP SCREW	1		X	3/8"X3" (FOR R66794)
4	R64449	BUSHING	2		X	(FOR R60827) (SUB FOR 24H2547)
	R64449	BUSHING	1		X	(FOR R66794)
5	24H1304	WASHER	2		X	13/32"X23/32"X.120"
6	R60828	BRACKET	1		X	REAR
7	19H2284	CAP SCREW	2		X	3/8"X7/8"
8	12H304	LOCK WASHER	3		X	3/8"
9	24H1305	WASHER	2		X	13/32"X13/16"X.060"
10	R66794	BRACKET	1		X	
11	19H1801	CAP SCREW	1		X	3/8"X2" (FOR R66794)
12	T20204	STRAP	1		X	

COPYRIGHT©1994 - 2008 DEERE & COMPANY Moline, Illinois All rights reserved

(4C09) ANTI-WRAP GUARD(CROSS SHAKER)
GARANT ANTIENROULEMENT - SECOUEUR ROTATIF
WICKELSCHUTZ-QUERSCHUETTLER
DIFESA CONTRA AVVOLGIMENTI (SCUOTITORE INCROCIATO)
DEFENSA CONTRA ARROLLAMIENTO (SACUDIDOR TRANSVERSAL)
LINDNINGSSKYDD FOR TVARLIGGANDE SKAKARE

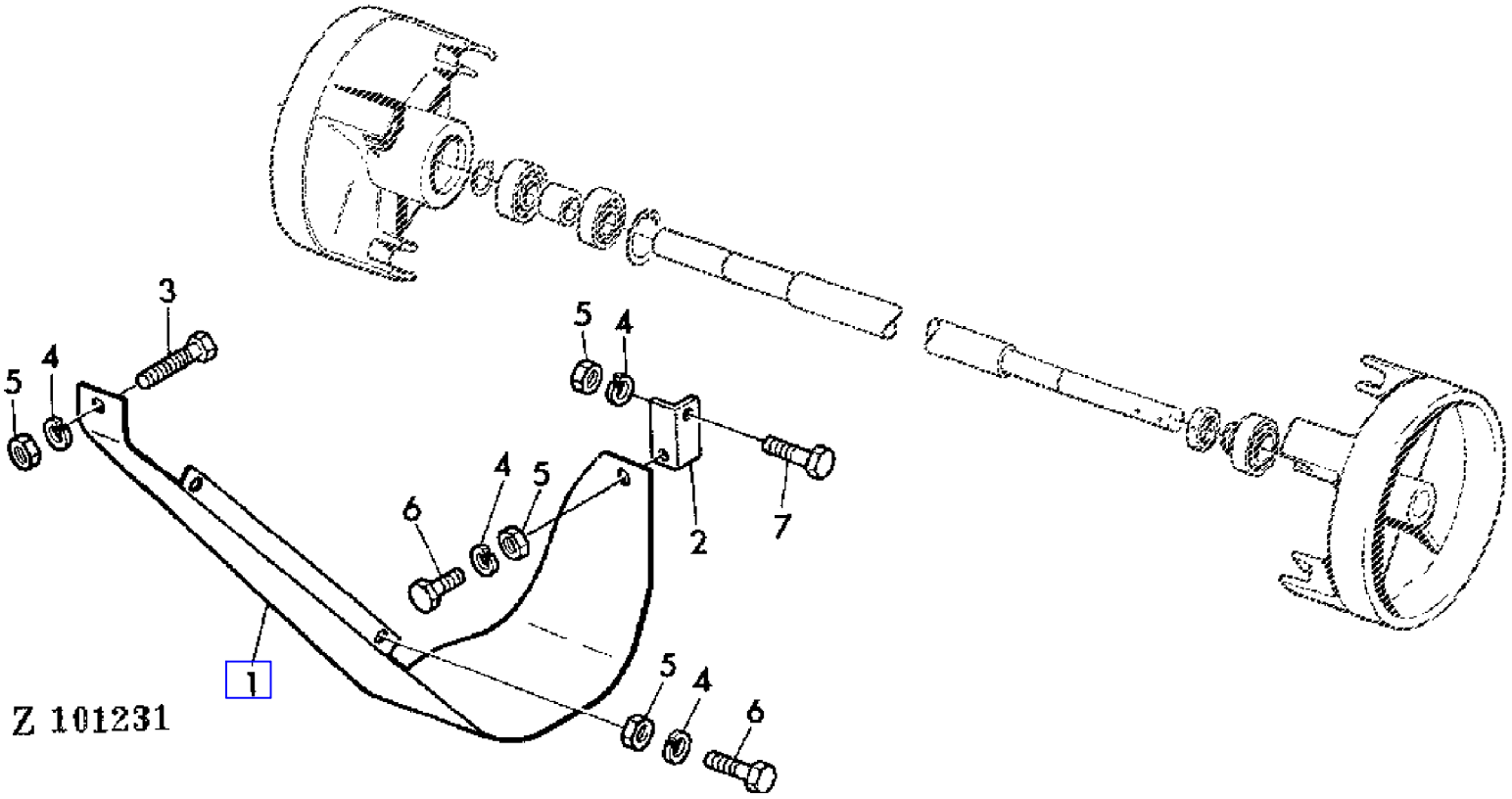

COPYRIGHT©1994 - 2008 DEERE & COMPANY Moline, Illinois All rights reserved

(4C09) ANTI-WRAP GUARD(CROSS SHAKER)
GARANT ANTIENROULEMENT - SECOUEUR ROTATIF
WICKELSCHUTZ-QUERSCHUETTLER
DIFESA CONTRA AVVOLGIMENTI (SCUOTITORE INCROCIATO)
DEFENSA CONTRA ARROLLAMIENTO (SACUDIDOR TRANSVERSAL)
LINDNINGSSKYDD FOR TVARLIGGANDE SKAKARE

KEY	PART NO.	PART NAME	QTY	SERIAL NO.	955	REMARKS
1	AZ22013	DEFLECTOR	1		X	RH, AR
	AZ22014	DEFLECTOR	1		X	LH, AR
2	Z33067	ANGLE	1		X	RH, AR
	Z33068	ANGLE	1		X	LH, AR
3	19M7284	CAP SCREW	2		X	M8X18
4	12M7008	LOCK WASHER	AR		X	8MM
5	14M7029	NUT	AR		X	M8
6	19M7297	CAP SCREW	AR		X	M8X12
7	19M7162	CAP SCREW	1		X	M8X15

COPYRIGHT©1994 - 2008 DEERE & COMPANY Moline, Illinois All rights reserved

(1H14) AXLE EXTENSION(FINAL DRIVE SHAFT)
RALLONGE(ARBRE DE COMMANDE FINALE)
ACHSVERLAENGERUNG (ENDANTRIEBSWELLE)
PROLUNGA ASSALE(ALBERO RIDUZIONE FINALE)
ALARGADERA (EJE DEL MANDO FINAL)
AXELFORLANGNING (SLUTVAXEL)

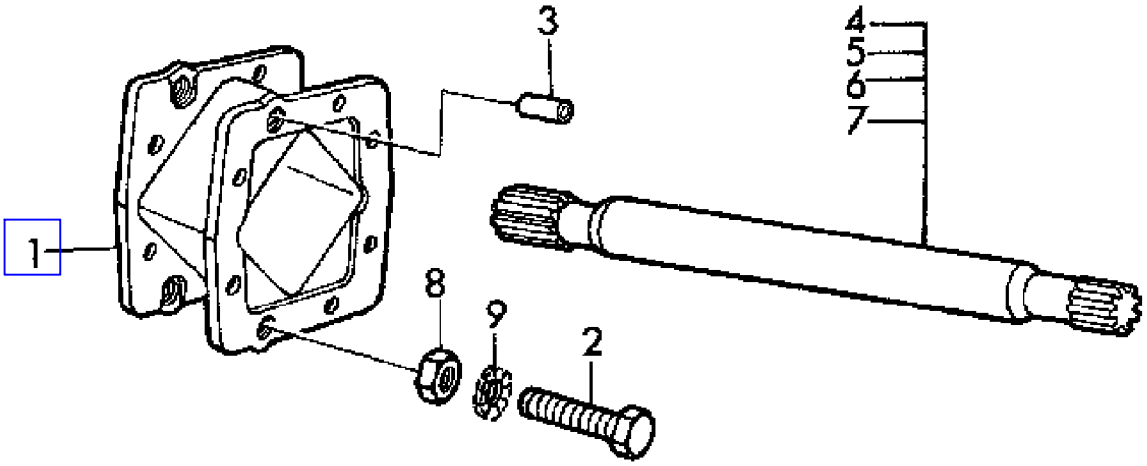

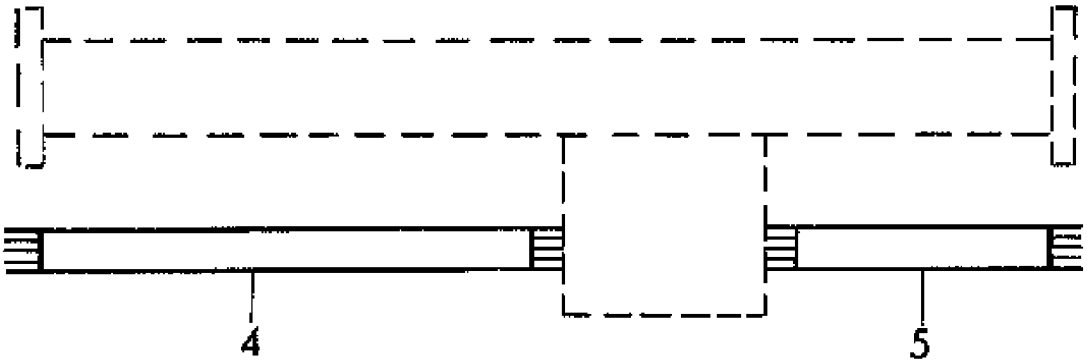

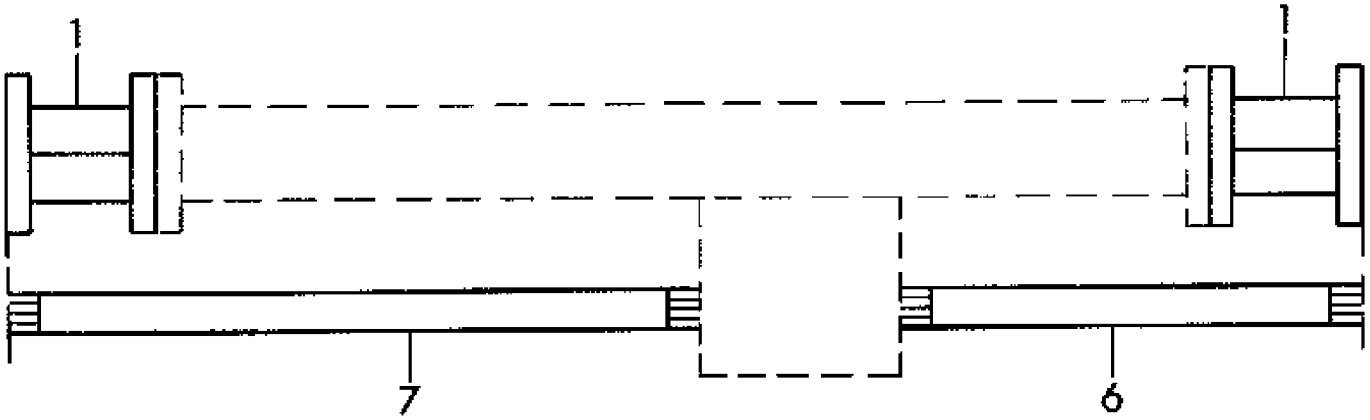

Z 61890A

COPYRIGHT©1994 - 2008 DEERE & COMPANY Moline, Illinois All rights reserved

(1H14) AXLE EXTENSION(FINAL DRIVE SHAFT)
RALLONGE(ARBRE DE COMMANDE FINALE)
ACHSVERLAENGERUNG (ENDANTRIEBSWELLE)
PROLUNGA ASSALE(ALBERO RIDUZIONE FINALE)
ALARGADERA (EJE DEL MANDO FINAL)
AXELFORLANGNING (SLUTVAXEL)

KEY	PART NO.	PART NAME	QTY	SERIAL NO.			955	REMARKS
1	Z10863	EXTENSION	2				X	(A)
2	19H2663	CAP SCREW	12				X	(A) 3/4"X2-1/8"
	19H1862	CAP SCREW	4				X	(A) 3/4"X2-1/2"
3	H36569	BUSHING	4				X	(A)
4	Z32611	DRIVE SHAFT	1		-	016667	X	(A) LH, LGTH = 671 MM 26.42"
	Z37933	DRIVE SHAFT	1	016668	-	026952	X	(A) LH, LGTH = 645 MM 25.39"
	Z37937	SHAFT	1	026953	-		X	(A) LH, LGTH = 593 MM 23.35"
5	Z32612	DRIVE SHAFT	1		-	016667	X	(A) RH, LGTH = 273,5 MM 10.77"
	Z37934	DRIVE SHAFT	1	016668	-	026952	X	(A) RH, LGTH = 246 MM 9.69"
	Z37938	SHAFT	1	026953	-		X	(A) RH, LGTH = 295,5 MM 11.63"
6	P50244	DRIVE SHAFT	1		-	016667	X	(A) RH, LGTH = 410 MM 16.13"
	Z38335	DRIVE SHAFT	1	016668	-	026952	X	(A) RH, LGTH = 386 MM 15.2"
	Z38796	DRIVE SHAFT	1	026953	-		X	(A) RH, LGTH = 435 MM 17.13"
7	Z32614	DRIVE SHAFT	1		-	016667	X	(A) LH, LGTH = 811 MM 31.93"
	Z38336	DRIVE SHAFT	1	016668	-	026952	X	(A) LH, LGTH = 785 MM 30.9"
	Z38794	DRIVE SHAFT	1	026953	-		X	(A) LH, LGTH = 735 MM 28.94"
8	14H794	NUT	16				X	(A) 3/4"
9	12M7053	LOCK WASHER	16				X	(A) 19MM

(A) WHEEL DRIVEN COMBINES ONLY
UNIQUEMENT SUR MOISSONNEUSE-BATTEUSE AVEC ENTRAINEMENT A ROUES
NUR BEI MAEHDRESCHER MIT RADANTRIEB
SOLTANTO CON MIETITREBBIE CON AZION. A RUOTA
TAN SOLO PARA COSECHADORAS CON ACCION. DE RUEDAS
ENDAST VID SKORDETROSKA FORSEDD MED HJULDREV

COPYRIGHT©1994 - 2008 DEERE & COMPANY Moline, Illinois All rights reserved

(2E17) AXLE SUPPORT
SUPPORT D'ESSIEU
ACHSVERSTREBUNG
SUPPORTO D'ASSALE
SOPORTE DEL EJE
AXELFASTE

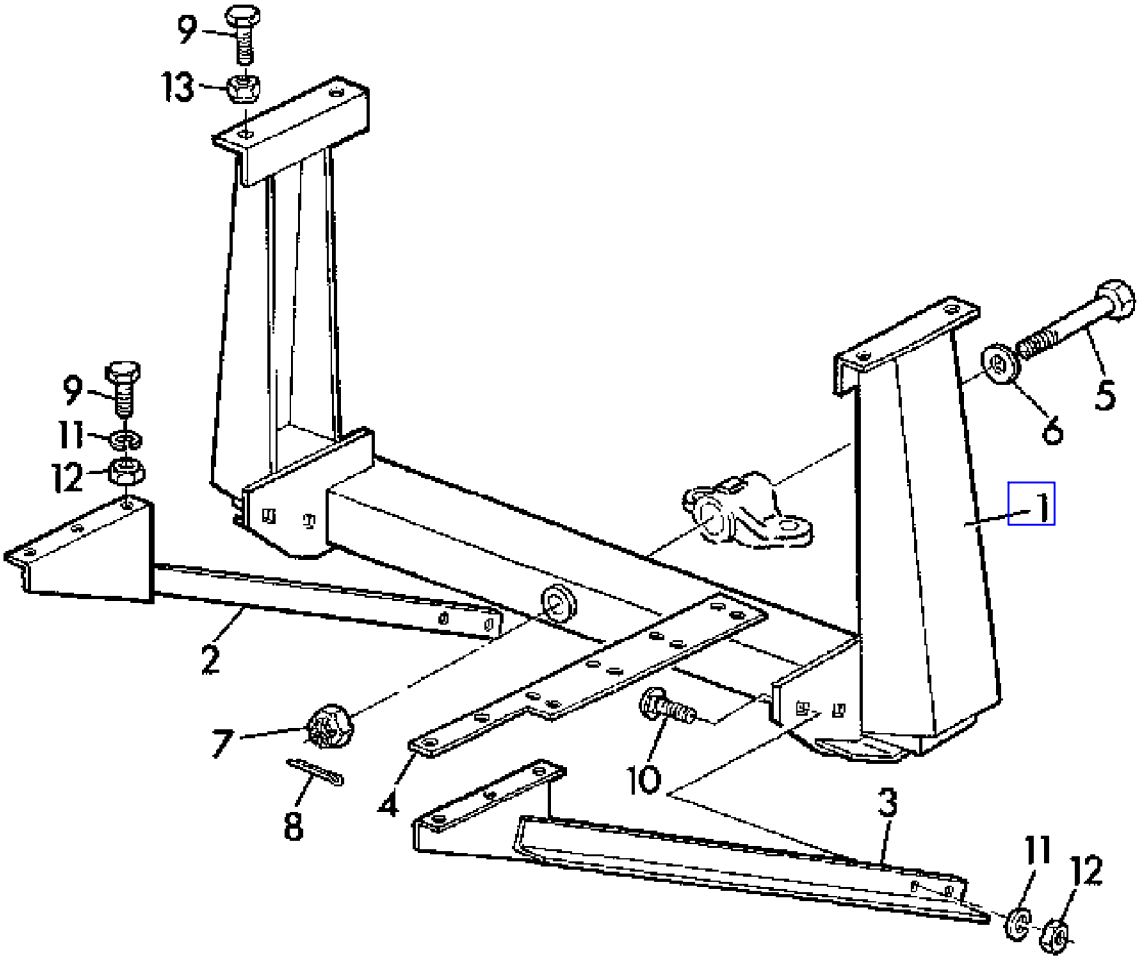

Z 36281

COPYRIGHT©1994 - 2008 DEERE & COMPANY Moline, Illinois All rights reserved

(PC4146) 955 Combine

(2E17) AXLE SUPPORT
SUPPORT D'ESSIEU
ACHSVERSTREBUNG
SUPPORTO D'ASSALE
SOPORTE DEL EJE
AXELFASTE

KEY	PART NO.	PART NAME	QTY	SERIAL NO.	955	REMARKS
1	AZ20378	CROSSBAR	1		X	
2	AZ20377	BRACE	1		X	RH
3	AZ20376	BRACE	1		X	LH
4	Z35192	RETAINER	1		X	
5	Z31728	CAP SCREW	1		X	20X190MM
6	Z26239	WASHER	1		X	
7	14M7211	NUT	1		X	M20
8	11M7024	COTTER PIN	1		X	4X40MM
9	19M7169	CAP SCREW	10		X	M10X35
10	03M7098	BOLT	4		X	M10X35
11	12M7013	LOCK WASHER	10		X	M10
12	14M7140	NUT	10		X	M10
13	14M7167	LOCK NUT	4		X	M10

COPYRIGHT©1994 - 2008 DEERE & COMPANY Moline, Illinois All rights reserved

(1E09) BATTERY
BATTERIE
BATTERIE
BATTERIA
BATERIA
BATTERI

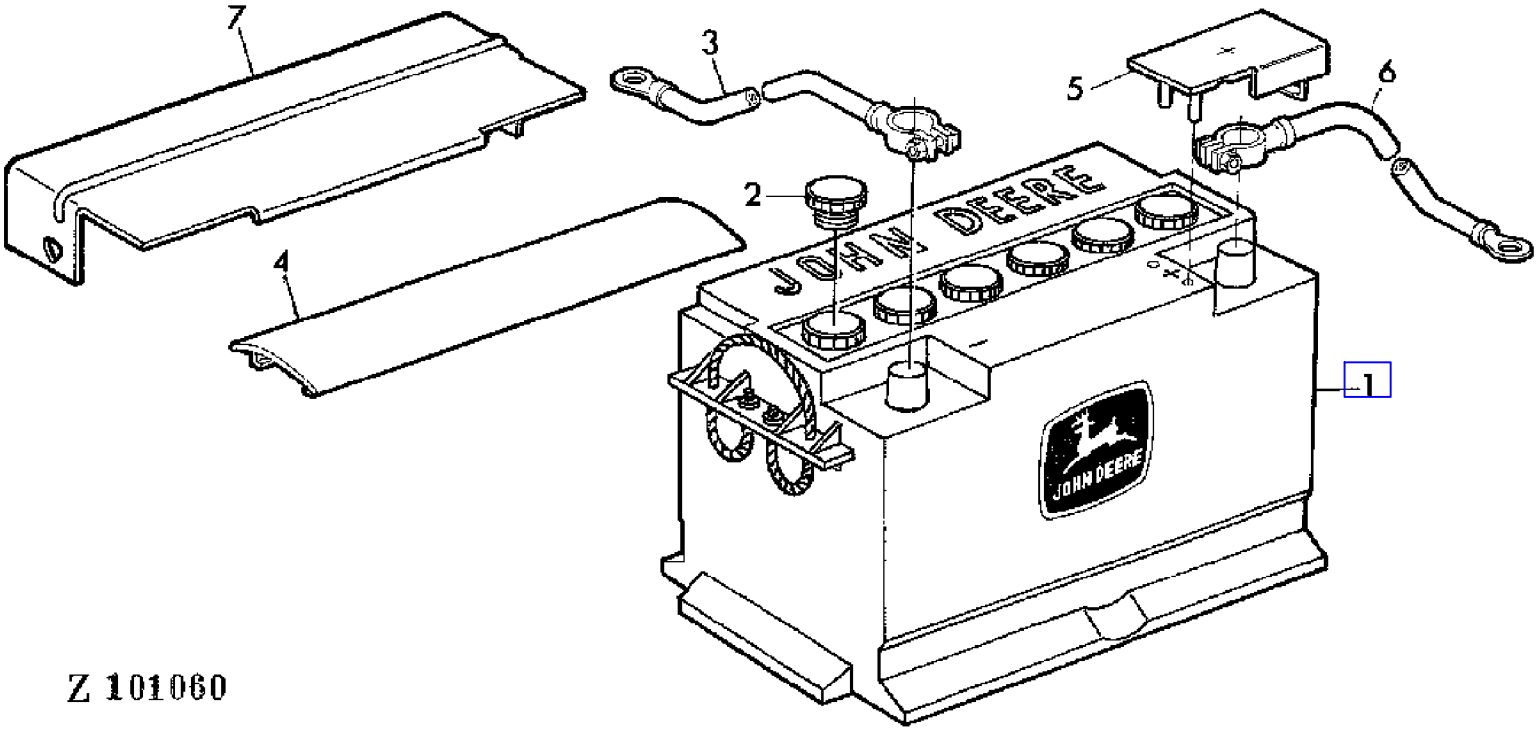

COPYRIGHT©1994 - 2008 DEERE & COMPANY Moline, Illinois All rights reserved

(PC4146) 955 Combine

(1E09) BATTERY
BATTERIE
BATTERIE
BATTERIA
BATERIA
BATTERI

KEY	PART NO.	PART NAME	QTY	SERIAL NO.	955	REMARKS
1	AZ28597	BATTERY	1	- 052570	X	AR, 12V 88AH 395A (ORD AL66622)
	AL37560	BATTERY	1	- 052570	X	12V 88AH 395A (SUB FOR AL26940)
2	Z35198	PLUG	6	- 052570	X	
3	AZ14775	CABLE	1		X	
4	Z35200	COVER	1	- 052570	X	
5	Z35199	COVER	1		X	
6	AZ21140	CABLE	1		X	
7	Z41812	COVER	1	- 052570	X	

COPYRIGHT©1994 - 2008 DEERE & COMPANY Moline, Illinois All rights reserved

(1E10) BATTERY
BATTERIE
BATTERIE
BATTERIA
BATERIA
BATTERI

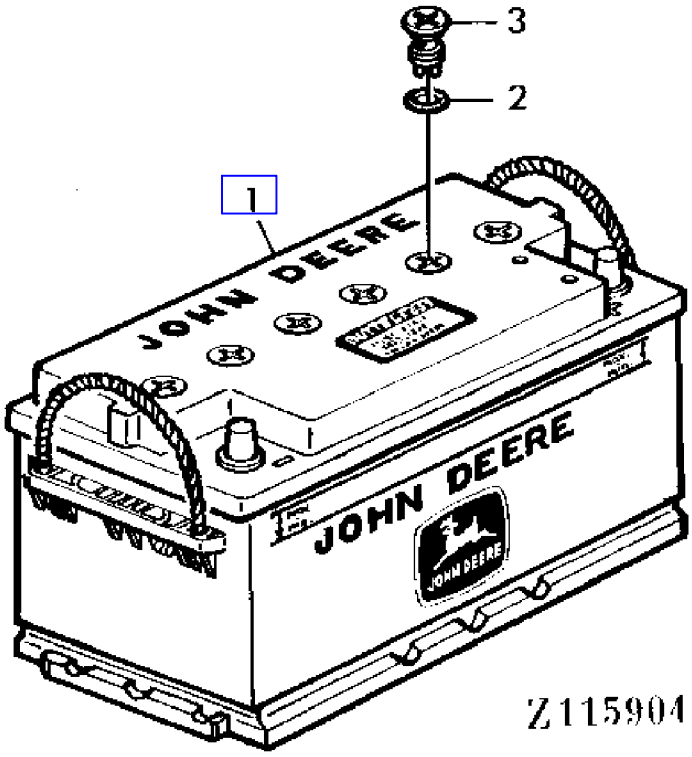

COPYRIGHT©1994 - 2008 DEERE & COMPANY Moline, Illinois All rights reserved

(PC4146) 955 Combine

(1E10) BATTERY
BATTERIE
BATTERIE
BATTERIA
BATERIA
BATTERI

KEY	PART NO.	PART NAME	QTY	SERIAL NO.		955	REMARKS
1	AL66622	BATTERY	1	052571	-	X	12V 88AH 395A
2	L62875	O-RING	6	052571	-	X	
3	L62874	PIPE PLUG	6	052571	-	X	

COPYRIGHT©1994 - 2008 DEERE & COMPANY Moline, Illinois All rights reserved

(3G15) BEARING BRACKET,LEFT-HAND
SUPPORT DU PALIER GAUCHE
LAGERHALTER LINKS
SUPPORTO CUSCINETTO SINISTRO
PORTACOJINETE Y SOPORTE (LADO IZQUIERDO)
LAENSTER LAGERHALLARE

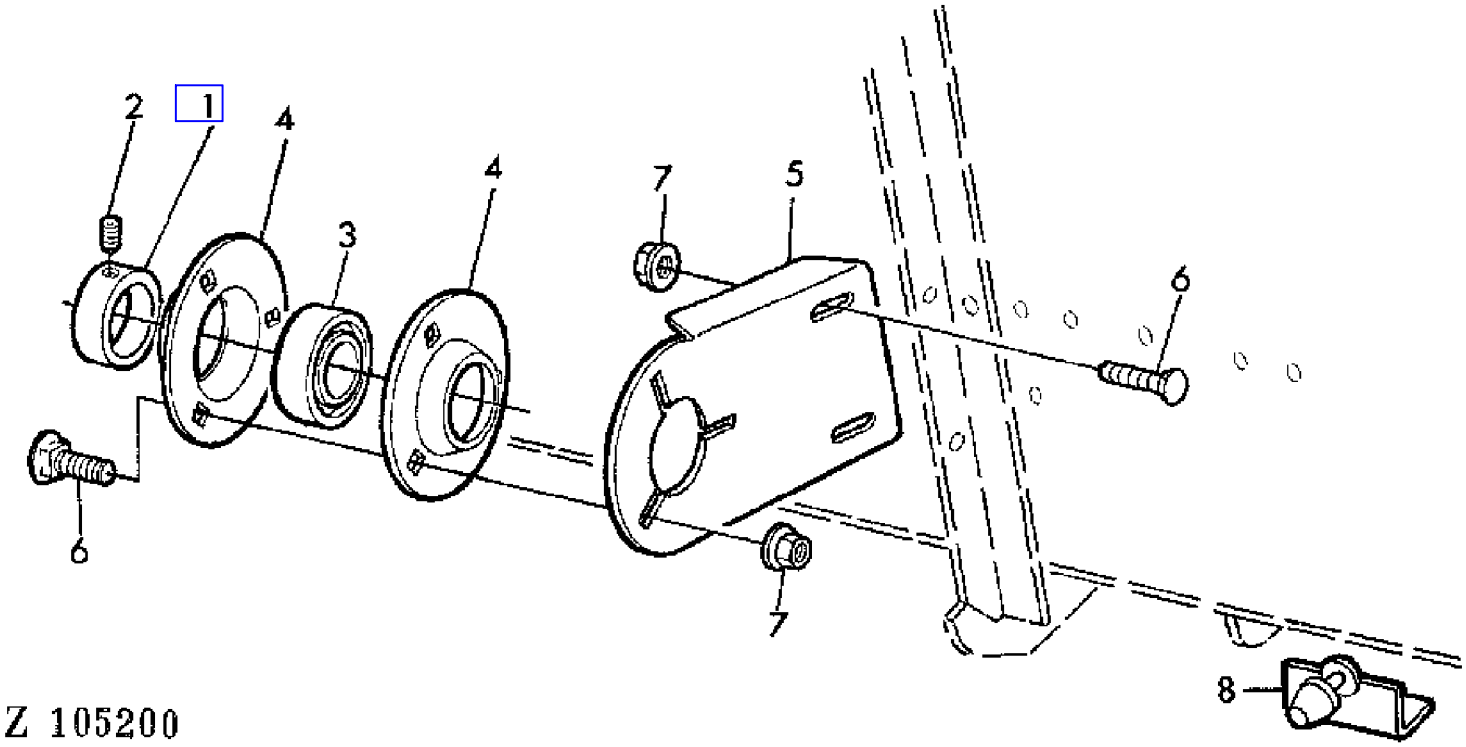

COPYRIGHT©1994 - 2008 DEERE & COMPANY Moline, Illinois All rights reserved

(3G15) BEARING BRACKET,LEFT-HAND
SUPPORT DU PALIER GAUCHE
LAGERHALTER LINKS
SUPPORTO CUSCINETTO SINISTRO
PORTACOJINETE Y SOPORTE (LADO IZQUIERDO)
LAENSTER LAGERHALLARE

KEY	PART NO.	PART NAME	QTY	SERIAL NO.	955	REMARKS
1	JD8544	ECCENTRIC LOCKING COLLAR	1		X	
2	.....	SET SCREW	1		X	5/16"X5/16"
3	JD9274	BALL BEARING	1		X	
4	C3056E	PRESSED FLANGED HOUSING	2		X	
5	H87583	BRACKET	1		X	(A)
6	03H1765	BOLT	5		X	3/8"X3/4"
7	N10215	LOCK NUT	5		X	3/8"
8	AZ34942	HOLDER	2		X	AR (SUB FOR AZ25088)

(A) ON CUTTING PLATFORMS OVER 18 FT
UNIQUEMENT PLATES-FORMES DE COUPE DE PLUS DE 18'
NUR BEI SCHNEIDWERKEN UEBER 18'
SOLTANTO PER PIATTAFORME CON PIU DI 18'
TAN SOLO EN PLATAFORMAS DE CORTE A PARTIR DE 18 PIES
ENDAST FOER SKAERBORD OEVER 18'

COPYRIGHT©1994 - 2008 DEERE & COMPANY Moline, Illinois All rights reserved

(PC4146) 955 Combine

(4A25) BEATER
TIRE-PAILLE
WENDETROMMEL
LANCIAPAGLIA
BATIDOR
HALMVINDA

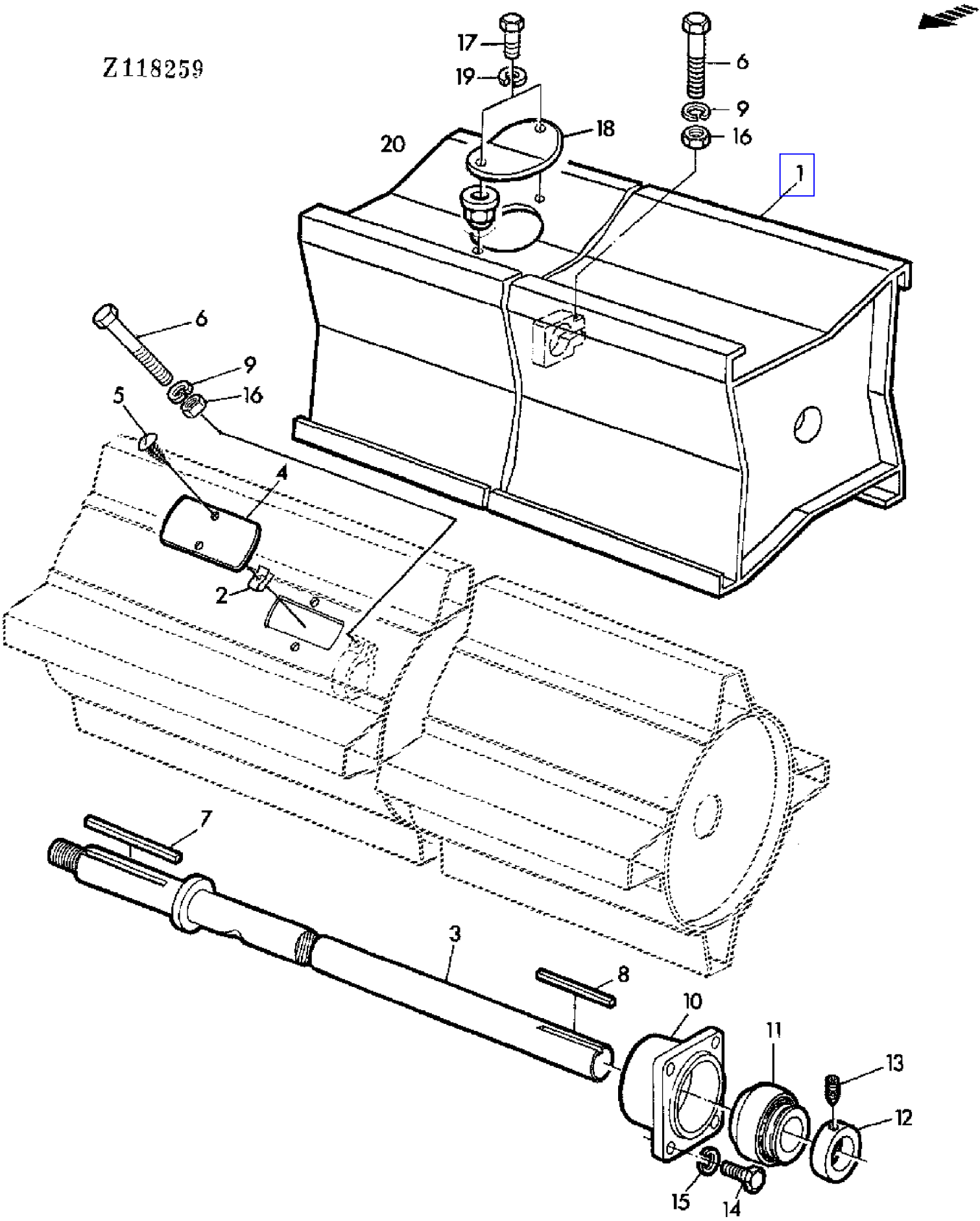

COPYRIGHT©1994 - 2008 DEERE & COMPANY Moline, Illinois All rights reserved

(PC4146) 955 Combine

(4A25) BEATER
TIRE-PAILLE
WENDETROMMEL
LANCIAPAGLIA
BATIDOR
HALMVINDA

KEY	PART NO.	PART NAME	QTY	SERIAL NO.	955	REMARKS
1	AZ34393	BEATER	1		X	INCL KEYS 6,9,16-19 (SUB FOR AZ20897)
2	Z20443	NUT	2	- 012311	X	
3	AZ20540	SHAFT	1		X	
4	Z34285	COVER	1	- 012311	X	
5	37M7009	SCREW	2	- 012311	X	
6	19M7495	CAP SCREW	1		X	M16X100
7	49M7019	SHAFT KEY	1		X	12X8X180MM
8	49M7018	SHAFT KEY	1		X	12X8X140MM
9	12M7017	LOCK WASHER	1		X	16MM
10	Z11331	HOUSING	2		X	(SUB FOR Z10745, Z11131)
11	AZ19432	BALL BEARING	2		X	
12	AZ20539	ECCENTRIC LOCKING COLLAR	2		X	INCL KEY 13
13	22M7081	SET SCREW	2		X	M10X10
14	19M7285	CAP SCREW	8		X	M12X30
15	12M7014	LOCK WASHER	8		X	12MM
16	14M7142	NUT	1		X	M16
17	19M7297	CAP SCREW	2		X	M8X12
18	Z30879	COVER	1		X	
19	12M7008	LOCK WASHER	2		X	8MM
20	Z51801	NUT	2		X	

COPYRIGHT©1994 - 2008 DEERE & COMPANY Moline, Illinois All rights reserved

(4B01) BEATER VARIABLE DRIVE
VARIATEUR DU TIRE-PAILLE
WENDETROMMEL-VARIATOR
VARIATORE LANCIAPAGLIA
VARIADOR DEL BATIDOR
HALMVINDANSVARIATOR

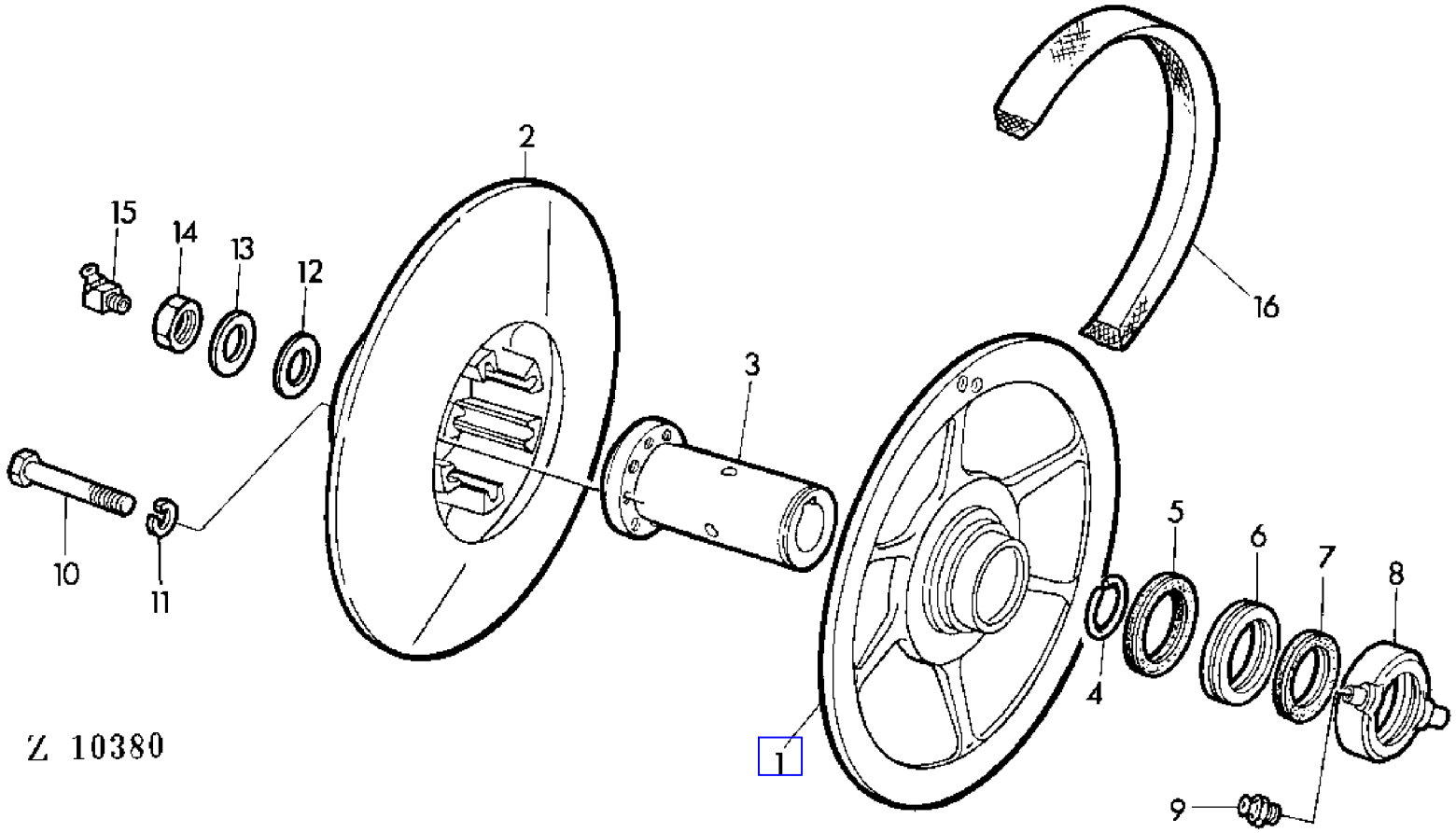

COPYRIGHT©1994 - 2008 DEERE & COMPANY Moline, Illinois All rights reserved

(4B01) BEATER VARIABLE DRIVE
VARIATEUR DU TIRE-PAILLE
WENDETROMMEL-VARIATOR
VARIATORE LANCIAPAGLIA
VARIADOR DEL BATIDOR
HALMVINDANSVARIATOR

KEY	PART NO.	PART NAME	QTY	SERIAL NO.	955	REMARKS
1	Z10769	HALF SHEAVE	1		X	
2	Z11295	HALF SHEAVE	1		X	
3	Z10746	HUB	1		X	
4	Z32314	SNAP RING	1		X	
5	Z22296	FELT	1		X	
6	JD33164	THRUST BEARING	1		X	
7	Z22297	FELT	1		X	
8	Z10128	RING	1		X	
9	58M7006	LUBRICATION FITTING	1		X	M8X1
10	19M7156	CAP SCREW	8		X	M10X60
11	12M7013	LOCK WASHER	8		X	10MM
12	Z26640	WASHER	AR		X	TK = 1 MM, ID = 25 MM
13	Z30966	WASHER	1		X	TK = 5 MM, ID = 26 MM
14	14M7174	LOCK NUT	1		X	M24X1,5
15	58M5577	LUBRICATION FITTING	1		X	M8
16	Z53288	BELT	1		X	(SUB FOR Z20823)

COPYRIGHT©1994 - 2008 DEERE & COMPANY Moline, Illinois All rights reserved

(PC4146) 955 Combine

(3D06) BLOWER FAN
VENTILATEUR
GEBLAESE
VENTILAZIONE
VENTILADOR
VENTILATIONSFLAEKT

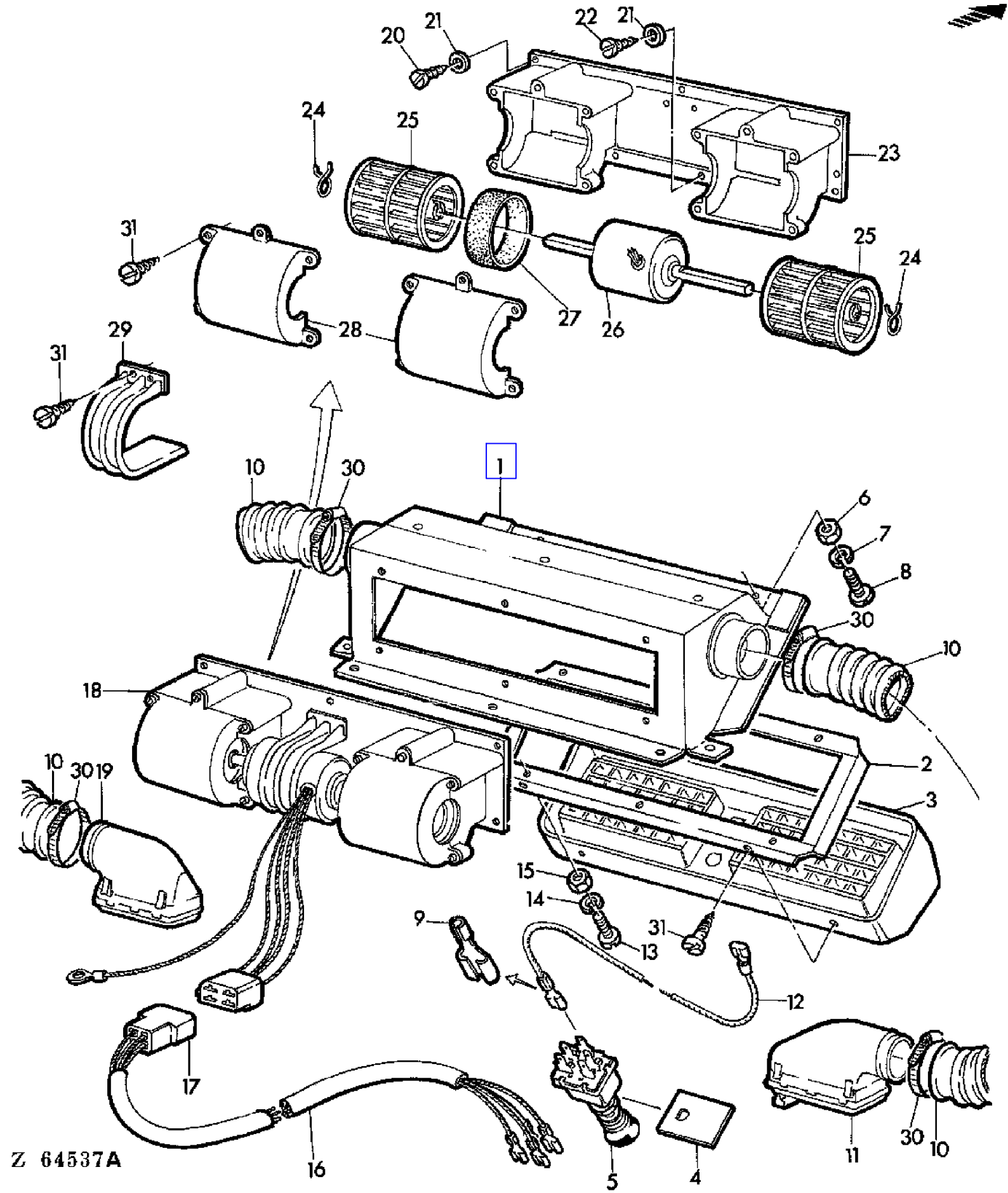

COPYRIGHT©1994 - 2008 DEERE & COMPANY Moline, Illinois All rights reserved

(PC4146) 955 Combine

(3D06) BLOWER FAN
VENTILATEUR
GEBLAESE
VENTILAZIONE
VENTILADOR
VENTILATIONSFLAEKT

KEY	PART NO.	PART NAME	QTY	SERIAL NO.	955	REMARKS
1	CA19725	HOUSING	1		X	
2	CA19734	FRAME	1		X	
3	CA19730	AIR DUCT	1		X	
4	CA19733	PLATE	1		X	
5	CA19731	SWITCH	1		X	
6	14M7027	NUT	8		X	M6
7	12M7012	LOCK WASHER	8		X	6MM
8	21M7031	SCREW	8		X	M6X15
9	CA19728	TERMINAL	AR		X	
10	CA19735	HOSE	2		X	
11	CA19737	AIR DUCT	1		X	LH
12	CA19729	CABLE	1		X	INCL KEY 9
13	21M1249	SCREW	6		X	M4X12
14	12M7031	LOCK WASHER	6		X	4MM
15	14M7139	NUT	6		X	M4
16	CA19732	WIRING HARNESS	1		X	INCL KEY 17
17	CA19727	LINK	1		X	
18	CA19726	MOTOR	1		X	ASSY, INCL KEYS 20-31
19	CA19736	AIR DUCT	1		X	RH
20	37M7026	SCREW	5		X	4,2X9,5MM
21	24M7117	WASHER	7		X	4,3MM
22	37M7030	SCREW	2		X	4,2X25MM
23	CA19897	MODULE	1		X	
24	CA19900	CLAMP	2		X	
25	CA19899	FAN	2		X	
26	CA19894	MOTOR	1		X	
27	CA19895	ENGINE	1		X	
28	CA19896	COVER	2		X	
29	CA19898	HOLDER	1		X	
30	Z34568	CLAMP	4		X	
31	37M6835	SCREW	AR		X	5,5X13MM

COPYRIGHT©1994 - 2008 DEERE & COMPANY Moline, Illinois All rights reserved

(1G08) BRACKETS-VARIABLE GROUND SPEED DRIVE
VARIATEUR DE DEPLACEMENT-SUPPORTS
HALTERUNG-FAHRVARIATOR
SUPPORTI DEL VARIATORE DI VELOCITA SUL TERRENO
SOPORTES DEL VARIADOR CONTINUO DE LA VELOCIDAD DE MARCHA
HALLARE FOR KORVARIATOR

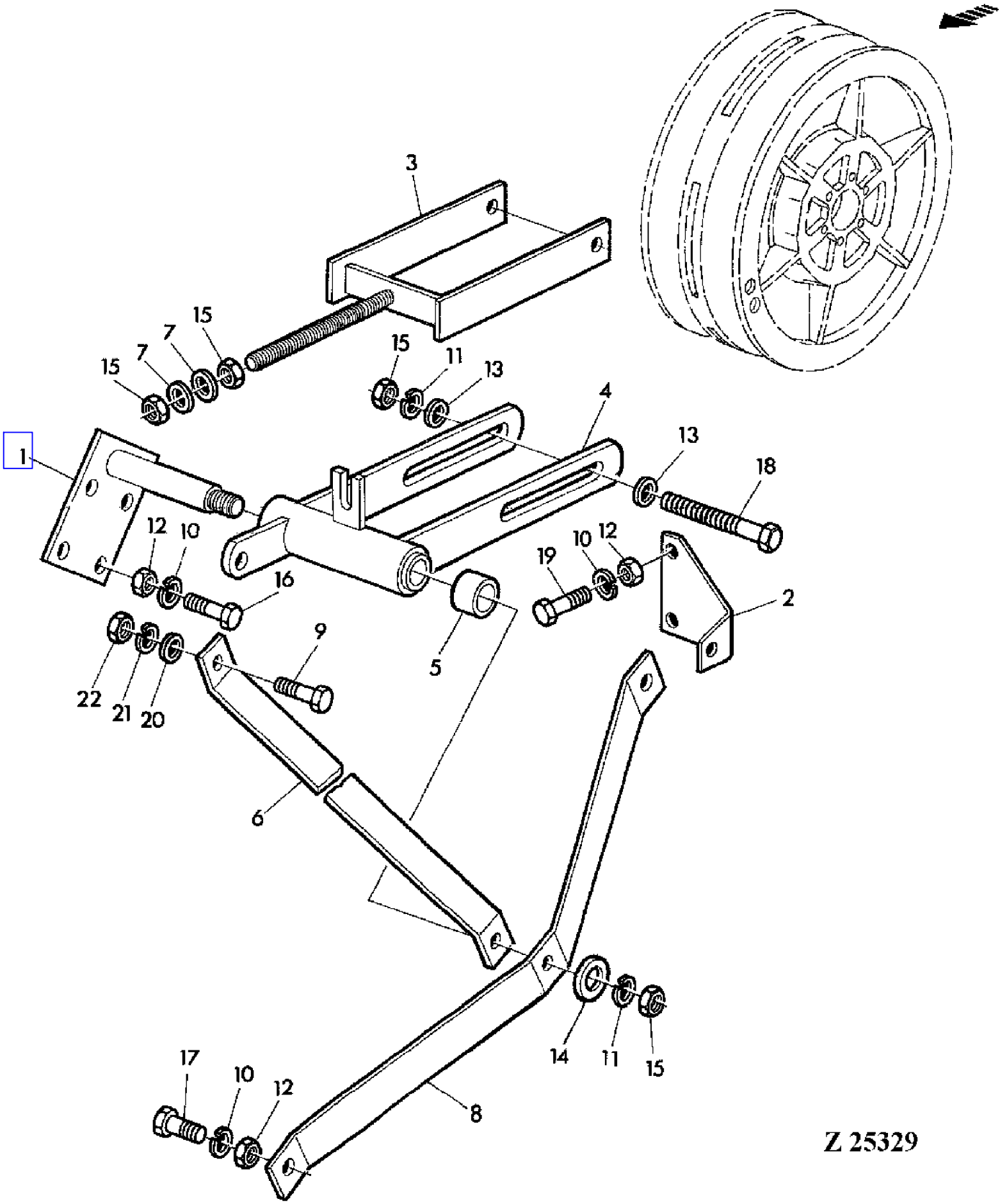

COPYRIGHT©1994 - 2008 DEERE & COMPANY Moline, Illinois All rights reserved

(1G08) BRACKETS-VARIABLE GROUND SPEED DRIVE
VARIATEUR DE DEPLACEMENT-SUPPORTS
HALTERUNG-FAHRVARIATOR
SUPPORTI DEL VARIATORE DI VELOCITA SUL TERRENO
SOPORTES DEL VARIADOR CONTINUO DE LA VELOCIDAD DE MARCHA
HALLARE FOR KORVARIATOR

KEY	PART NO.	PART NAME	QTY	SERIAL NO.	955	REMARKS
1	AZ31513	LEVER	1		X	(SUB FOR AZ10420)
2	Z32058	BRACKET	1		X	
3	AZ10418	SADDLE	1		X	
4	AZ10705	FORK	1		X	
5	Z20862	BUSHING	2		X	
6	Z20869	BRACKET	1		X	
7	24M7053	WASHER	AR		X	17MM
8	Z20870	BRACE	1		X	
9	19M7268	CAP SCREW	1		X	M12X25
10	12M7013	LOCK WASHER	AR		X	10MM
11	12M7017	LOCK WASHER	AR		X	16MM
12	14M7022	NUT	AR		X	M10
13	L18889	WASHER	2		X	
14	Z26641	WASHER	1		X	
15	14M7084	NUT	AR		X	M16
16	19M7166	CAP SCREW	4		X	M10X20
17	19M7183	CAP SCREW	2		X	M10X40
18	19M7356	CAP SCREW	1		X	M16X250
19	19M7167	CAP SCREW	2		X	M10X25
20	24M7038	WASHER	AR		X	14MM
21	12M7014	LOCK WASHER	AR		X	12MM
22	14M7031	NUT	AR		X	M12

COPYRIGHT©1994 - 2008 DEERE & COMPANY Moline, Illinois All rights reserved

(2B18) BRAKE CYLINDER
CYLINDRE DE FREIN
BREMSZYLINDER
CILINDRO COMANDO FRENO
BOMBIN DEL FRENO
BROMSTRYKCYLINDER

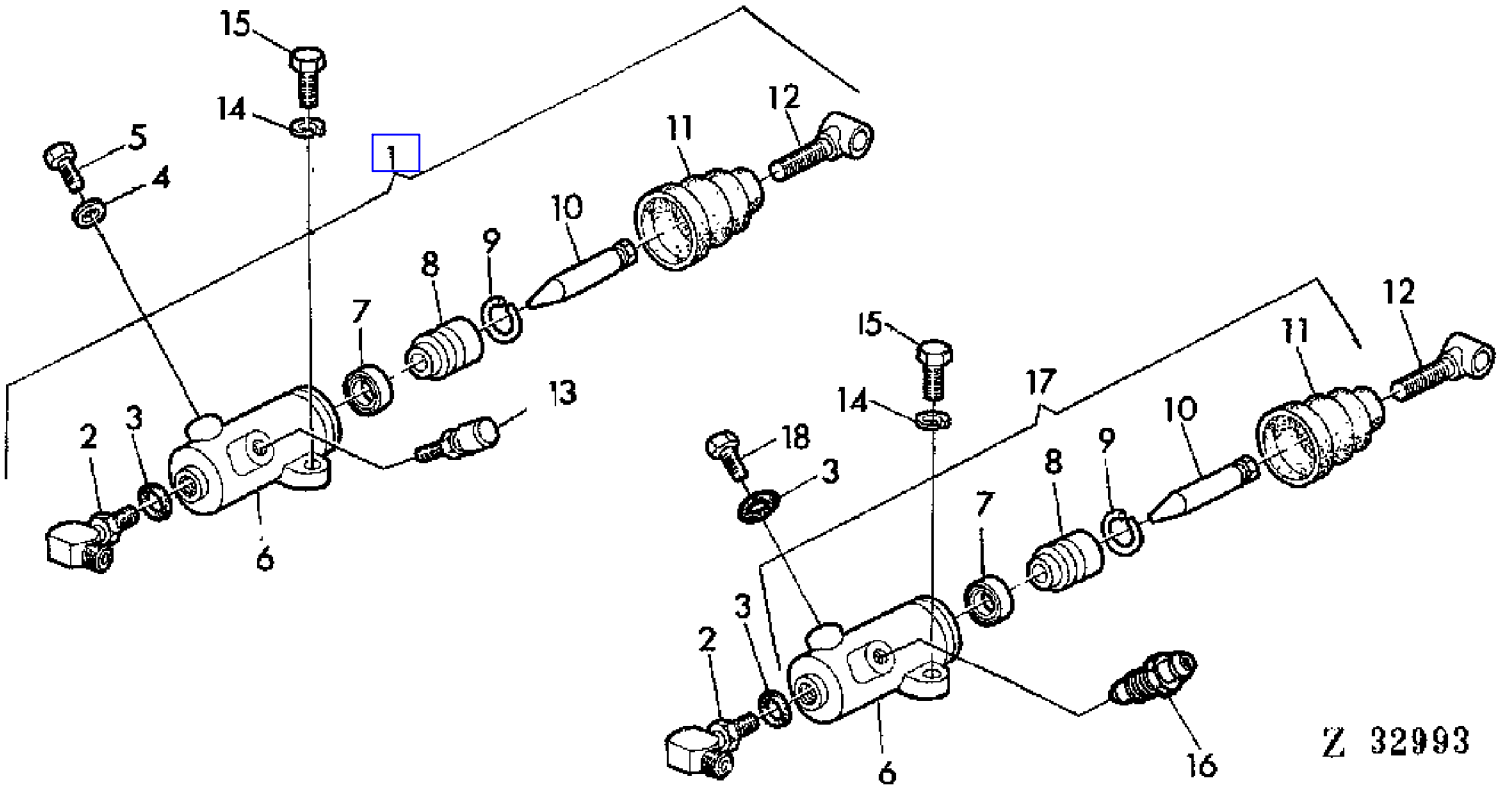

COPYRIGHT©1994 - 2008 DEERE & COMPANY Moline, Illinois All rights reserved

(2B18) BRAKE CYLINDER
CYLINDRE DE FREIN
BREMSZYLINDER
CILINDRO COMANDO FRENO
BOMBIN DEL FRENO
BROMSTRYKCYLINDER

KEY	PART NO.	PART NAME	QTY	SERIAL NO.	955	REMARKS
1	AZ18762	HYDRAULIC CYLINDER	1		X	LH, INCL KEYS 2-13 (ORD AZ30204 W/ AR26746, R21612, (2) R26287, Z30222)
	AZ18763	HYDRAULIC CYLINDER	1		X	RH, INCL KEYS 2-13 (ORD AZ30204 W/ AR26746, R21612, (2) R26287, Z30222)
2	AR26746	ELBOW FITTING	2		X	
3	R26287	O-RING	2		X	
4	51M4229	RING	2		X	
5	Z30220	CAP SCREW	2		X	
6	.....	ANGLE BLADE CYLINDER	2		X	NSEP
7	Z30217	SEAL	2		X	
8	.....	PISTON	2		X	NSEP
9	40M6219	SNAP RING	2		X	22MM
10	Z30218	PLUNGER	2		X	
11	Z30219	BOOT	2		X	
12	Z30222	EYEBOLT	2		X	
13	AL37521	BLEED VALVE	2		X	(SUB FOR Z30221)
14	12H303	LOCK WASHER	4		X	5/16"
15	19H1905	CAP SCREW	4		X	5/16"X1"
16	R21612	BLEED SCREW	2		X	
17	AZ30204	HYDRAULIC CYLINDER	2		X	INCL KEYS 6-11
18	R31631	DRAIN PLUG	2		X	

COPYRIGHT©1994 - 2008 DEERE & COMPANY Moline, Illinois All rights reserved

(1I06) BRAKE FOOT PEDALS
PEDALES DE FREIN
BREMSE-FUSSHEBEL
PEDALI FRENO
PEDALES DE FRENO
BROMSPEDALER

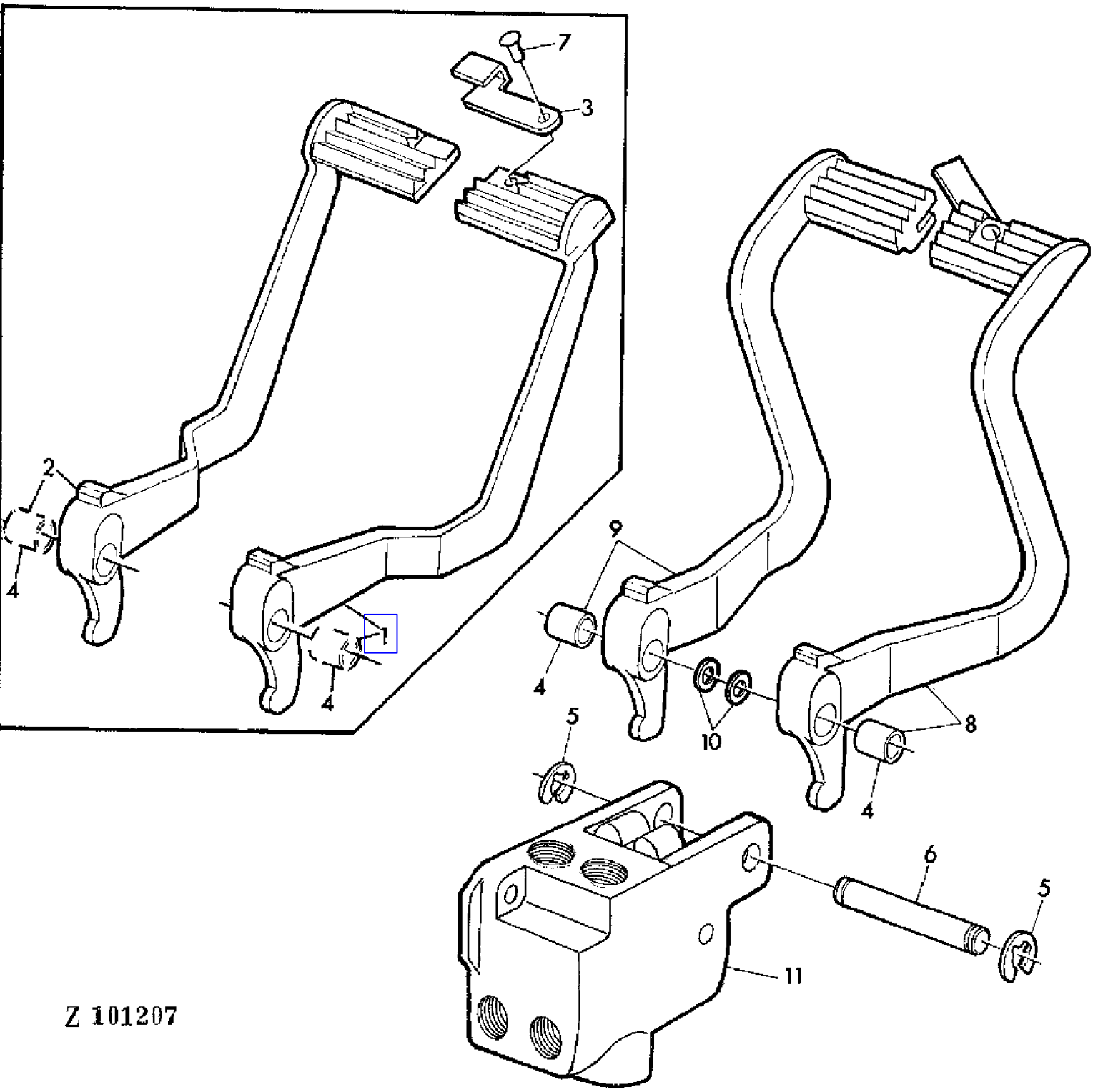

COPYRIGHT©1994 - 2008 DEERE & COMPANY Moline, Illinois All rights reserved

(1I06) BRAKE FOOT PEDALS
PEDALES DE FREIN
BREMSE-FUSSHEBEL
PEDALI FRENO
PEDALES DE FRENO
BROMSPEDALER

KEY	PART NO.	PART NAME	QTY	SERIAL NO.		955	REMARKS
1	AZ14582	PEDAL	1		- 026722	X	ASSY, INCL KEYS 3,4,8
2	AZ14821	PEDAL	1		- 026722	X	ASSY, INCL KEY 4
3	Z21757	LEVER	1		- 026722	X	
4	B177R	BUSHING	2			X	
5	F2863R	SNAP RING	2			X	
6	T49189	PIN	1			X	(SUB FOR T21803)
7	16M2549	RIVET	1		- 026722	X	8X25MM
8	AZ28883	PEDAL	1	026723	-	X	INCL KEY 4
9	AZ28884	PEDAL	1	026723	-	X	INCL KEY 4
10	Z27188	SHIM	AR			X	
11	.....	HOUSING	1			X	SECTION 70

COPYRIGHT©1994 - 2008 DEERE & COMPANY Moline, Illinois All rights reserved

(2C19) BRAKE SYSTEM
CIRCUIT DE FREIN
BREMSSYSTEM
IMPIANTO FRENANTE
SISTEMA DE FRENO
BROMSSYSTEM

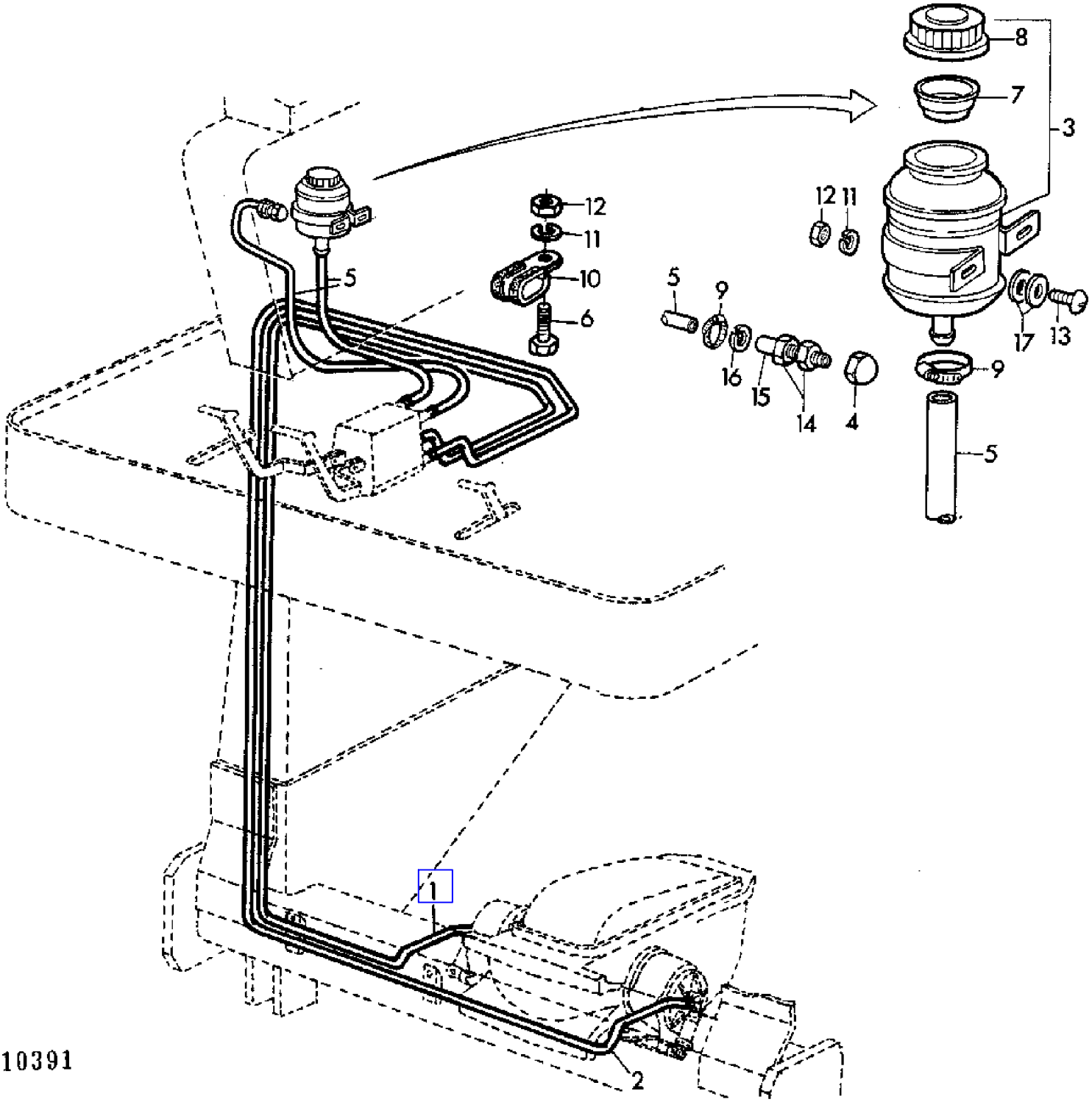

COPYRIGHT©1994 - 2008 DEERE & COMPANY Moline, Illinois All rights reserved

(2C19) BRAKE SYSTEM
CIRCUIT DE FREIN
BREMSSYSTEM
IMPIANTO FRENANTE
SISTEMA DE FRENO
BROMSSYSTEM

KEY	PART NO.	PART NAME	QTY	SERIAL NO.			955	REMARKS
1	AZ21339	OIL LINE	1		-	027002	X	
	AZ28094	OIL LINE	1	027003	-		X	
2	AZ21337	OIL LINE	1		-	027002	X	
	AZ28095	OIL LINE	1	027003	-		X	
3	AZ23719	OIL CUP	1		-	027002	X	ASSY, INCL KEYS 7,8
4	14M7235	NUT	1		-	027002	X	M8X1
5	Z34641	HOSE	1		-	027002	X	
6	19M7286	CAP SCREW	AR				X	M6X25
7	Z27996	STRAINER	1		-	027002	X	
8	Z27997	COVER	1		-	027002	X	
9	Z28856	CLAMP	2		-	027002	X	
10	Z29668	CLAMP	AR				X	
11	12M7012	LOCK WASHER	AR				X	6MM
12	14M7027	NUT	AR				X	M6
13	21M7127	SCREW	2		-	027002	X	M6X18
14	14M7254	NUT	1		-	027002	X	M8
15	Z33654	FITTING	1		-	027002	X	
16	12M7008	LOCK WASHER	1		-	027002	X	8MM
17	24M7100	WASHER	4		-	027002	X	7MM

COPYRIGHT©1994 - 2008 DEERE & COMPANY Moline, Illinois All rights reserved

(2B20) BRAKE VALVE
MAITRE-CYLINDRE DE FREIN
BREMSVENTIL
CILINDRO MAESTRO FRENI
VALVULA DE MANDO DEL FRENO
BROMSVENTIL

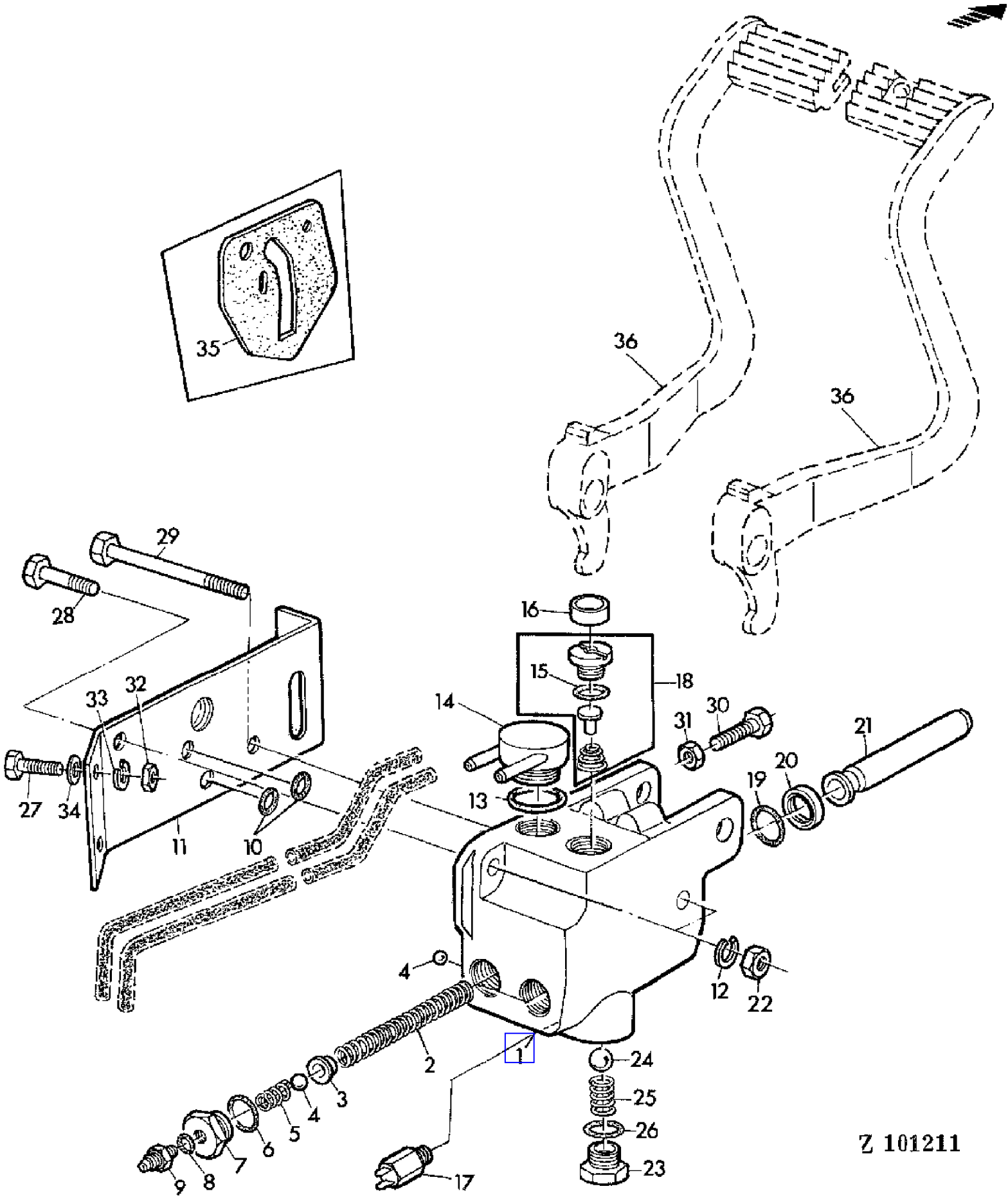

COPYRIGHT©1994 - 2008 DEERE & COMPANY Moline, Illinois All rights reserved

(PC4146) 955 Combine

(2B20) BRAKE VALVE
MAITRE-CYLINDRE DE FREIN
BREMSVENTIL
CILINDRO MAESTRO FRENI
VALVULA DE MANDO DEL FRENO
BROMSVENTIL

KEY	PART NO.	PART NAME	QTY	SERIAL NO.			955	REMARKS
1	AR63616	HOUSING	1				X	
2	R50112	SPRING	2				X	
3	T21815	RETAINER	2				X	
4	400R	BALL	3				X	
5	T21814	SPRING	2				X	
6	F3171R	O-RING	2				X	
7	R50110	FITTING	2				X	
8	R26287	O-RING	2				X	
9	R27139	FITTING	2				X	
10	R62513	O-RING	1	012312	-		X	
11	Z30213	BRACKET	1		-	012311	X	
	Z36749	BRACKET	1	012312	-		X	
12	12M7014	LOCK WASHER	2				X	12MM
13	A4730R	O-RING	1				X	
14	AZ21028	ADAPTER	1				X	INCL KEY 13
15	R26906	O-RING	1				X	
16	R35286	CAP	1				X	
17	AL27809	SWITCH	1				X	(SUB FOR AL17696)
18	AL23836	CHECK VALVE	1				X	ASSY, INCL KEY 15
19	R495R	O-RING	2				X	
20	T22101	SEAL	2				X	
21	R50111	PISTON	2		-	013543	X	(ORD (2) L34040)
	L34040	PISTON	2	013544	-		X	(SUB FOR L31840)
22	12M7031	LOCK WASHER	2				X	12MM
23	R39112	FITTING	2				X	
24	D2361R	BALL	2				X	
25	T21816	SPRING	2				X	
26	R26375	O-RING	2				X	
27	19M7139	CAP SCREW	2				X	M8X12
28	19M7387	CAP SCREW	1				X	M12X40
29	19M7415	CAP SCREW	1				X	M12X130
30	L32504	CAP SCREW	2				X	3/8"X1-1/4" (SUB FOR 19H1732)
31	14H732	NUT	2				X	3/8"
32	14M7029	NUT	2				X	M8
33	12M7008	LOCK WASHER	2				X	8MM
34	24M7036	WASHER	2				X	9MM
35	T30687	GASKET	1		-	012311	X	
36	.....	PEDAL	2				X	SECTION 60

COPYRIGHT©1994 - 2008 DEERE & COMPANY Moline, Illinois All rights reserved

(PC4146) 955 Combine

(3D08) CAB HEATING
CHAUFFAGE DE LA CABINE
KABINENHEIZUNG
RISCALDAMENTO CABINA
CALEFACCION DE LA CABINA
HYTTVARME

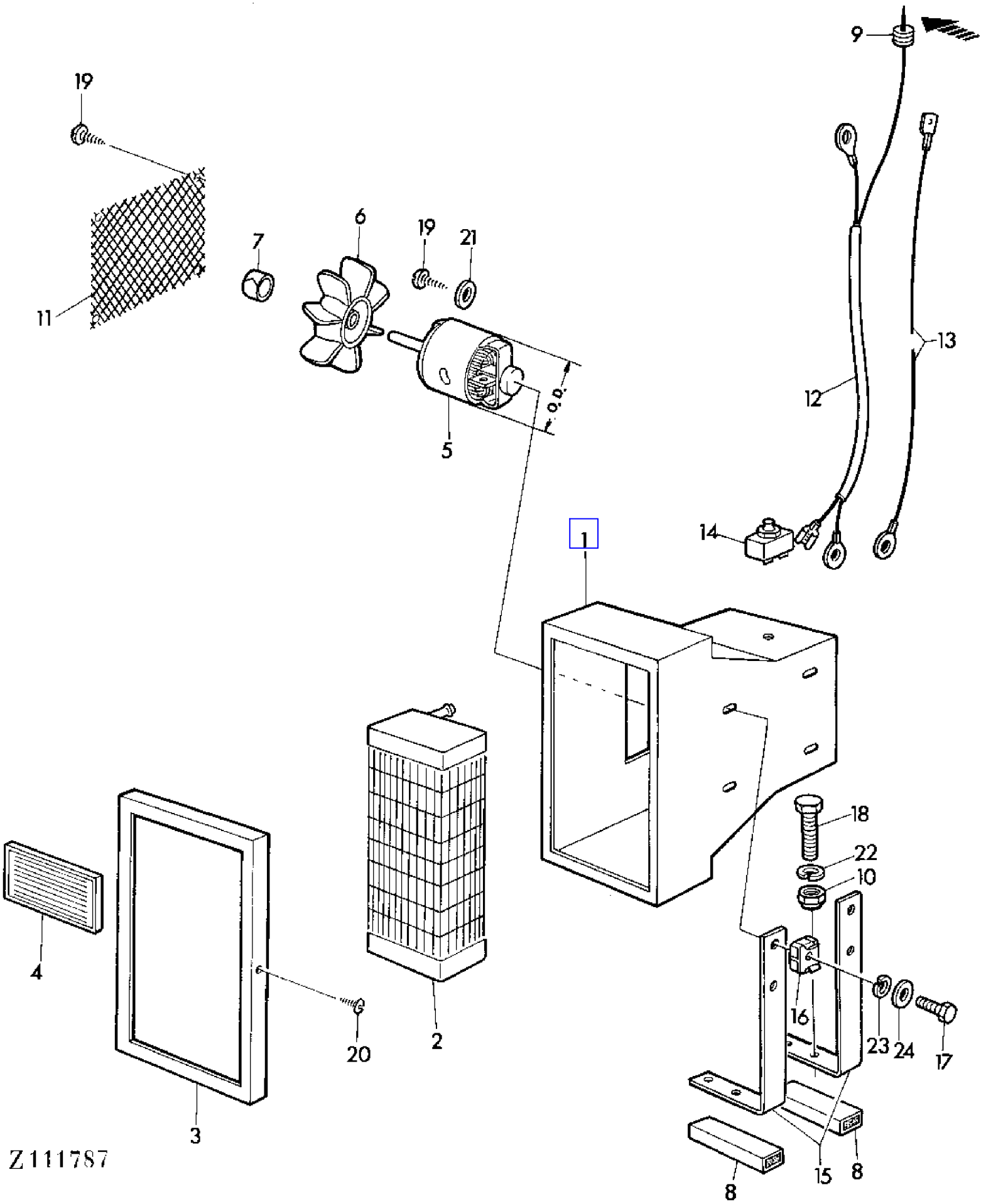

COPYRIGHT©1994 - 2008 DEERE & COMPANY Moline, Illinois All rights reserved

(PC4146) 955 Combine

(3D08) CAB HEATING
CHAUFFAGE DE LA CABINE
KABINENHEIZUNG
RISCALDAMENTO CABINA
CALEFACCION DE LA CABINA
HYTTVARME

KEY	PART NO.	PART NAME	QTY	SERIAL NO.	955	REMARKS
1	AL25289	HOUSING	1		X	(FOR AL25290)
	AL25296	HOUSING	1		X	(FOR AL23866)
2	AL25293	HEAT EXCHANGER	1		X	
3	VS140.00.02	FRAME	1		X	
4	VS130.00.04	GRATE	4		X	
5	AL23866	MOTOR	1		X	12V, OD = 59 MM (FOR AL25296) (SUB FOR VR10157)
	AL25290	MOTOR	1		X	12V, OD = 51 MM (FOR AL25289)
6	AL25291	IMPELLER	1		X	ASSY, INCL KEY 7
7	VR10168	BUSHING	1		X	
8	Z36071	SPACER	2		X	
9	Z21238	GROMMET	AR		X	
10	14M7166	LOCK NUT	4		X	M8
11	L30893	SCREEN	1		X	
12	VS009.01.37	CABLE	1		X	
13	VS009.01.47	CABLE	1		X	
14	VR10163	SWITCH	1		X	
15	VS140.95.31	HOLDER	2		X	
16	VS902.60.41	NUT	4		X	
17	19M7373	CAP SCREW	4		X	M5X20
18	19M7322	CAP SCREW	4		X	M8X35
19	VS902.11.44	SCREW	7		X	4,2X13MM, ASSY (W/ KEY 21)
20	37M7018	SCREW	2		X	2,9X6,5MM
21	.....	WASHER	3		X	(ORD KEY 19)
22	12M7008	LOCK WASHER	4		X	8MM
23	12M7011	LOCK WASHER	4		X	5MM
24	24M7027	WASHER	4		X	5,3MM

COPYRIGHT©1994 - 2008 DEERE & COMPANY Moline, Illinois All rights reserved

(1F24) CABLE CLIPS CONNECTORS AND PLUGS
PRISES,ELECTRIQUES
STECKVERBINDER FUER ELEKTRIK
CONNETTORI E DISTRIBUTORI ELETTRICI
REGLETAS DE CONEXIONES Y DISTRIBUIDORES ELECTRICOS
KOPPLINGSPLINTEN OCH STICKANSLUTNINGAR

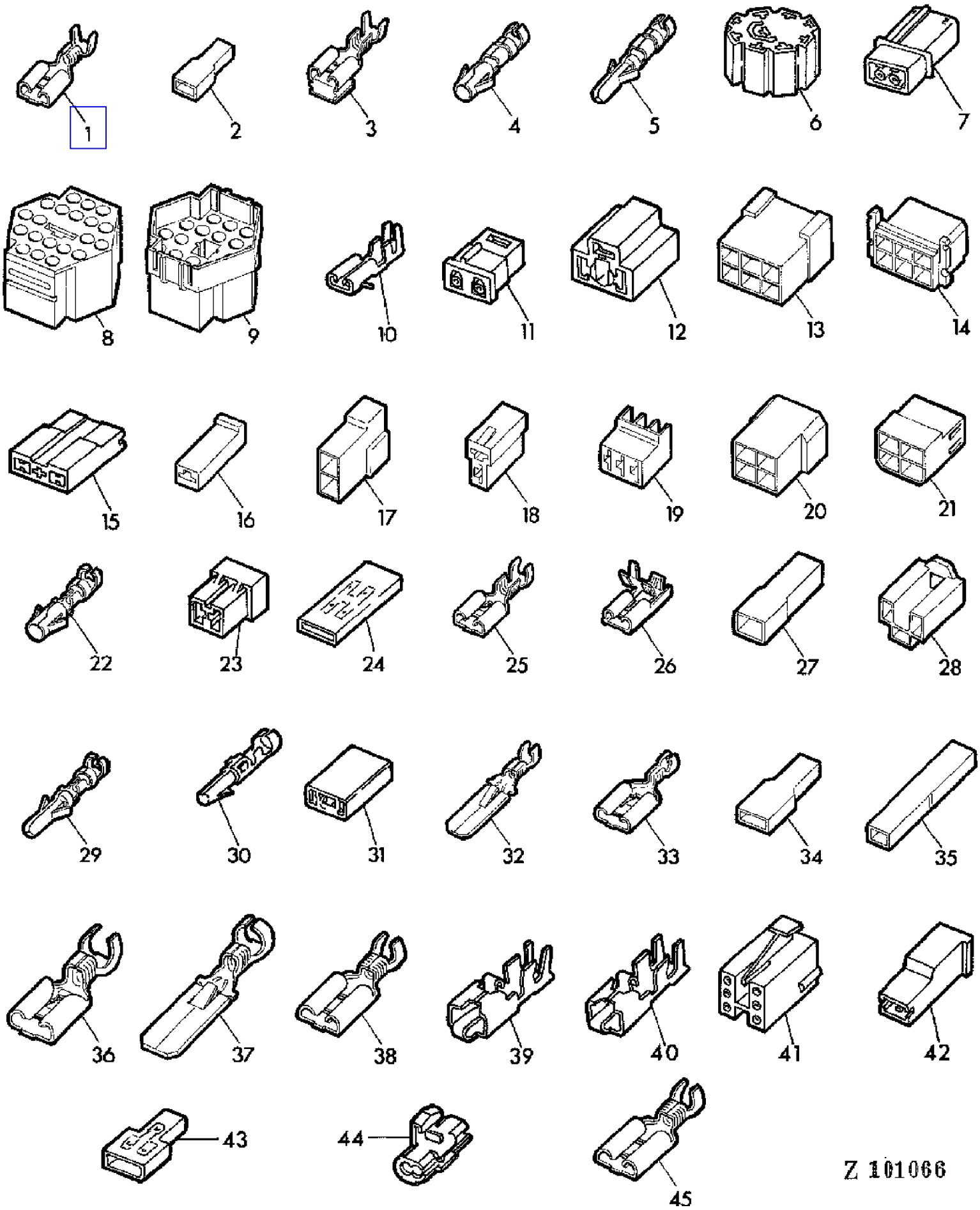

COPYRIGHT©1994 - 2008 DEERE & COMPANY Moline, Illinois All rights reserved

(1F24) CABLE CLIPS CONNECTORS AND PLUGS
PRISES,ELECTRIQUES
STECKVERBINDER FUER ELEKTRIK
CONNETTORI E DISTRIBUTORI ELETTRICI
REGLETAS DE CONEXIONES Y DISTRIBUIDORES ELECTRICOS
KOPPLINGSPLINTEN OCH STICKANSLUTNINGAR

KEY	PART NO.	PART NAME	QTY	SERIAL NO.	955	REMARKS
1	57M7045	TERMINAL	AR		X	
2	57M7033	INSULATING SLEEVE	AR		X	(SUB FOR Z28350)
3	57M7070	CONNECTOR	AR		X	
4	L36681	SOCKET CONTACT	AR		X	(FOR L37799) (SUB FOR Z34512)
5	L35423	PIN CONTACT	AR		X	(FOR L37798) (SUB FOR Z34514)
6	Z40754	CONNECTOR	AR		X	
7	Z40862	PIN CONTACT CONNECTOR BODY	AR		X	
8	L37799	SOCKET CONT.CONNECTOR BO...	AR		X	(SUB FOR Z34510)
9	L37798	PIN CONTACT CONNECTOR BODY	AR		X	(SUB FOR Z34511)
10	Z40695	SOCKET	AR		X	
11	Z40696	SOCKET	AR		X	
12	Z40753	RECEPTACLE CONNECTOR BODY	AR		X	
13	57M7059	TAB CONNECTOR BODY	AR		X	(SUB FOR Z29297)
14	57M7058	RECEPTACLE CONNECTOR BODY	AR		X	(SUB FOR Z29296)
15	Z40742	RECEPTACLE CONNECTOR BODY	AR		X	
16	57M7067	RECEPTACLE CONNECTOR BODY	AR		X	(SUB FOR Z34559)
17	57M7066	TAB CONNECTOR BODY	AR		X	
18	57M7065	RECEPTACLE CONNECTOR BODY	AR		X	
19	57M7062	RECEPTACLE CONNECTOR BODY	AR		X	
20	57M7061	TAB CONNECTOR BODY	AR		X	(SUB FOR Z34509)
21	57M7060	RECEPTACLE CONNECTOR BODY	AR		X	(SUB FOR Z34508)
22	L36685	SOCKET CONTACT	AR		X	(FOR L37799) (SUB FOR Z34515)
23	Z30963	ELECTRICAL PLUG	AR		X	
24	AZ31110	RECEPTACLE CONNECTOR BODY	AR		X	
25	57M7041	TERMINAL	AR		X	
26	57M7069	TERMINAL	AR		X	
27	57M7068	TAB CONNECTOR BODY	AR		X	(SUB FOR Z34560)
28	57M7064	RECEPTACLE CONNECTOR BODY	AR		X	
29	L36670	PIN CONTACT	AR		X	(FOR L37798) (SUB FOR Z34513)
30	Z40755	ELECTRICAL PLUG	AR		X	
31	H104855	RECEPTACLE CONNECTOR BODY	AR		X	(SUB FOR Z40924)
32	57M7039	TAB	AR		X	(SUB FOR Z29299)
33	57M7038	TERMINAL	AR		X	
34	57M7072	INSULATING SLEEVE	AR		X	
35	57M7073	FLAT CONNECTOR	AR		X	
36	57M7071	TERMINAL	AR		X	
37	57M7040	TAB	AR		X	
38	57M7046	TERMINAL	AR		X	
39	57M7106	TERMINAL	AR		X	2,5-4,0MM2 (SUB FOR Z40740)
40	57M7089	TERMINAL	AR		X	0,7-2,0MM2 (SUB FOR Z40741)
41	Z40756	ELECTRICAL PLUG	AR		X	
42	Z40757	INSULATING SLEEVE	AR		X	
43	AZ31109	ELECTRICAL PLUG	AR		X	
44	57M7095	CONNECTOR	AR		X	(SUB FOR AZ26518)

COPYRIGHT©1994 - 2008 DEERE & COMPANY Moline, Illinois All rights reserved

(1F24) CABLE CLIPS CONNECTORS AND PLUGS
PRISES,ELECTRIQUES
STECKVERBINDER FUER ELEKTRIK
CONNETTORI E DISTRIBUTORI ELETTRICI
REGLETAS DE CONEXIONES Y DISTRIBUIDORES ELECTRICOS
KOPPLINGSPLINTEN OCH STICKANSLUTNINGAR

KEY	PART NO.	PART NAME	QTY	SERIAL NO.	955	REMARKS
45	57M7044	TERMINAL	AR		X	

COPYRIGHT©1994 - 2008 DEERE & COMPANY Moline, Illinois All rights reserved

(1A23) CAMSHAFT/VALVES/ROCKER ARM SHAFT
ARBRE A CAMES/SOUPAPES/ARBRE DE CULBUTEURS
NOCKENWELLE/VENTILE/KIPPHEBELACHSE
ALBERO A CAMME/VALVOLE/ALBERO BILANCIERI
ARBOL DE LEVAS/VALVULAS/EJE DE BALANCINES
KAMAXEL/VENTILER/VIPPARMSAXEL

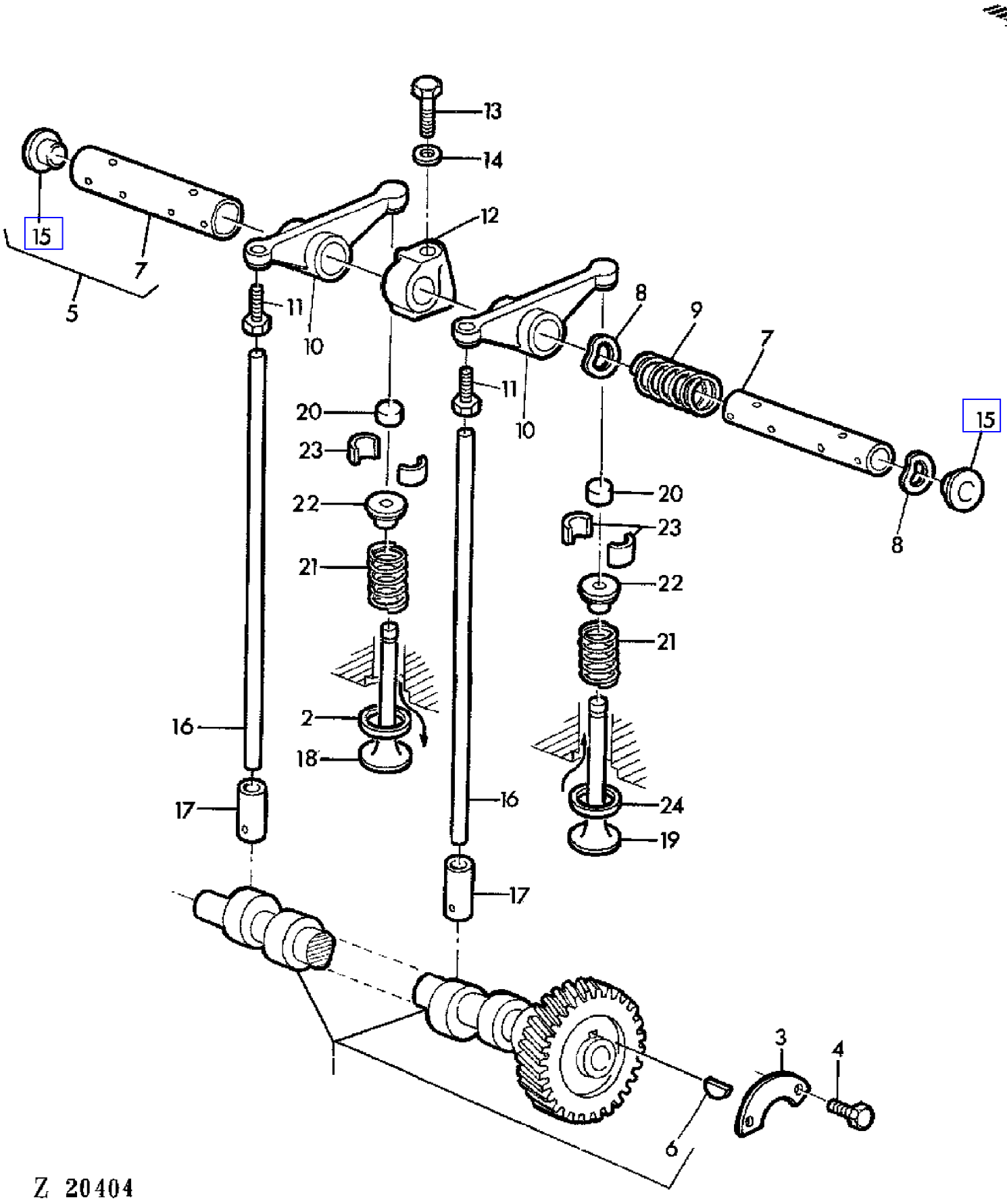

COPYRIGHT©1994 - 2008 DEERE & COMPANY Moline, Illinois All rights reserved

(1A23) CAMSHAFT/VALVES/ROCKER ARM SHAFT
ARBRE A CAMES/SOUPAPES/ARBRE DE CULBUTEURS
NOCKENWELLE/VENTILE/KIPPHEBELACHSE
ALBERO A CAMME/VALVOLE/ALBERO BILANCIERI
ARBOL DE LEVAS/VALVULAS/EJE DE BALANCINES
KAMAXEL/VENTILER/VIPPARMSAXEL

KEY	PART NO.	PART NAME	QTY	ENGINE SERIAL NO.	955	REMARKS
1	RE14977	CAMSHAFT	1		X	ASSY, INCL KEY 6 (SUB FOR AR97624, AT18190, DD13432)
2	CD14725	VALVE SEAT INSERT	AR		X	
3	T20072	PLATE	1		X	
4	19H1731	CAP SCREW	2		X	3/8"X1"
5	DD12121	ROCKER ARM SHAFT	1		X	KIT, INCL KEYS 7,15
6	T28041	SHAFT KEY	1		X	
7	R54986	SHAFT	1		X	NSEP (ORD KEY 5)
8	T20316	WASHER	2		X	
9	T20314	SPRING	5		X	
10	RE19031	ROCKER ARM	12		X	ASSY, INCL KEY 11 (SUB FOR AT31250)
11	.....	CAP SCREW	12		X	NSEP (ORD RE19031)
12	T20315	SUPPORT	6		X	
13	19H1733	CAP SCREW	6		X	3/8"X2-1/2"
14	R42729	WASHER	6		X	(SUB FOR T23594)
15	R54565	PLUG	2		X	
16	T20310	PIN	12		X	
17	T20073	TAPPET	12		X	
18	R52251	INTAKE VALVE	6		X	OD = STANDARD
	R57332	INTAKE VALVE	AR		X	OD = +0,076 MM 0.003"
	R57336	INTAKE VALVE	AR		X	OD = +0,762 MM 0.030"
19	R52252	EXHAUST VALVE	6		X	OD = STANDARD
	R57333	EXHAUST VALVE	AR		X	OD = +0,076 MM 0.003"
	R57337	EXHAUST VALVE	AR		X	OD = +0,762 MM 0.030"
20	T20129	CAP	12		X	
21	R26125	SPRING	12		X	
22	T20176	RETAINER	12		X	
23	T20077	RETAINER	24		X	
24	CD13979	VALVE SEAT INSERT	6		X	(W/ AR76241)
	CD13979	VALVE SEAT INSERT	AR		X	(W/ AR76289)
	CD13979	VALVE SEAT INSERT	6	- 235169	X	(W/ AR78607)

COPYRIGHT©1994 - 2008 DEERE & COMPANY Moline, Illinois All rights reserved

(PC4146) 955 Combine

(4C17) CHAFFER
GRILLES A OTONS
KURZSTROHSIEBE
CRIVELLI
CRIBAS DE GRANZAS
SALL

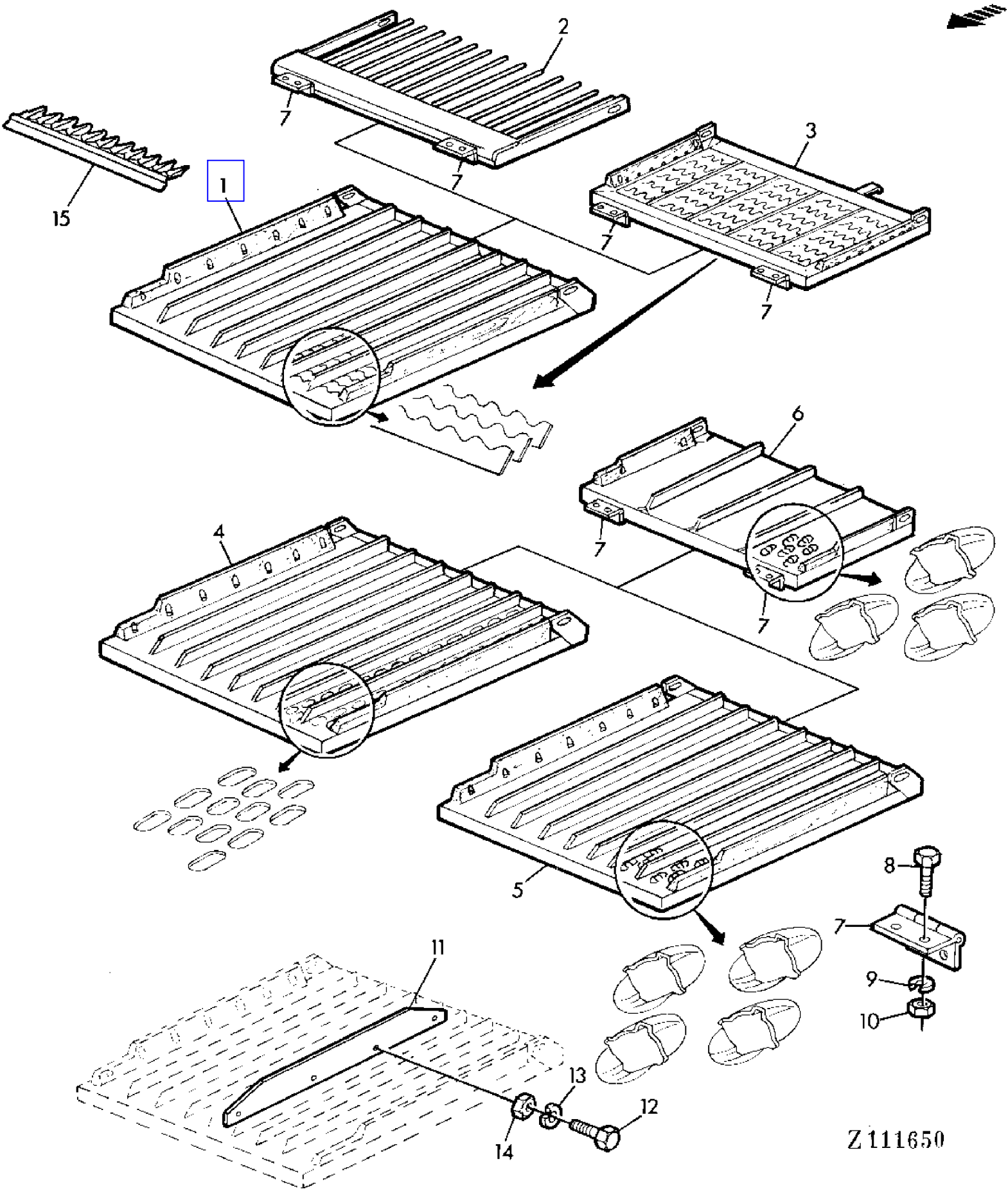

COPYRIGHT©1994 - 2008 DEERE & COMPANY Moline, Illinois All rights reserved

(4C17) CHAFFER
GRILLES A OTONS
KURZSTROHSIEBE
CRIVELLI
CRIBAS DE GRANZAS
SALL

KEY	PART NO.	PART NAME	QTY	SERIAL NO.			955	REMARKS
1	AZ28396	CHAFFER	1				X	(SUB FOR AZ10143)
2	AZ14287	EXTENSION	1				X	
3	AZ10144	EXTENSION	1		-	023897	X	
	AZ40214	CHAFFER	1	023898	-		X	(SUB FOR AZ23217)
4	AZ13655	CHAFFER	1				X	
5	AZ16222	CHAFFER	1				X	
6	AZ13656	EXTENSION	1				X	
7	Z24604	HINGE	AR				X	
8	19M6614	CAP SCREW	AR				X	M6X12
9	12M7012	LOCK WASHER	AR				X	6MM
10	14M7027	NUT	AR				X	M6
11	Z39063	GUIDE	5				X	(SUB FOR Z20287)
12	21M7015	CAP SCREW	30				X	M5X12
13	12M7011	LOCK WASHER	30				X	5MM
14	14M7028	NUT	30				X	M5
15	Z44873	FINGER GRATE	AR				X	

COPYRIGHT©1994 - 2008 DEERE & COMPANY Moline, Illinois All rights reserved

(4C03) CHAIN DRIVE-CROSS SHAKER
ENTRAINEMENT CHAINE DU SECOUEUR ROTATIF
KETTENANTRIEB-QUERSCHUETTLER
COMANDO CATENA DEL AGITATORE
TRANSMISION POR CADENA DEL SACUDIDOR TRANSVERSAL
TVAERSKAKARENS KEDJEDRIVNING

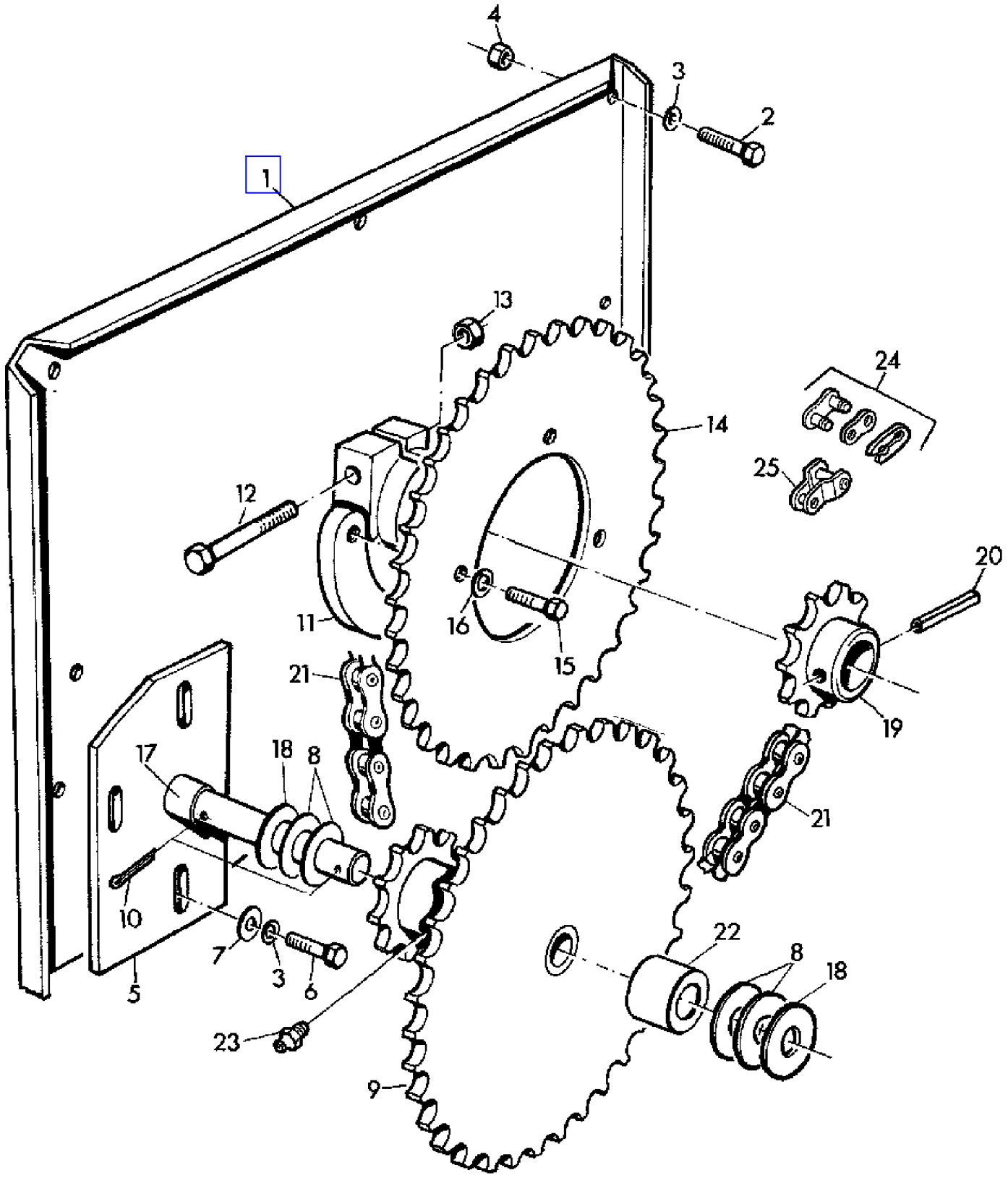

Z 101230

COPYRIGHT©1994 - 2008 DEERE & COMPANY Moline, Illinois All rights reserved

(4C03) CHAIN DRIVE-CROSS SHAKER
ENTRAINEMENT CHAINE DU SECOUEUR ROTATIF
KETTENANTRIEB-QUERSCHUETTLER
COMANDO CATENA DEL AGITATORE
TRANSMISION POR CADENA DEL SACUDIDOR TRANSVERSAL
TVAERSKAKARENS KEDJEDRIVNING

KEY	PART NO.	PART NAME	QTY	SERIAL NO.		955	REMARKS
1	AZ19541	SHEET	1	-	026422	X	
2	19M7166	CAP SCREW	5	-	026422	X	M10X20
3	12M7013	LOCK WASHER	7	-	026422	X	10MM
4	14M7140	NUT	5	-	026422	X	M10
5	AZ22292	PIVOT	1	-	026422	X	
6	19M7381	CAP SCREW	2	-	026422	X	M10X28
7	24M7040	WASHER	2	-	026422	X	11MM
8	Z27188	SHIM	4	-	026422	X	20,5X28X0,56MM
9	AZ19546	CHAIN SPROCKET	1	-	026422	X	
10	11M7022	COTTER PIN	2	-	026422	X	4X30MM
11	Z10758	HUB	1	-	026422	X	
12	19M7327	CAP SCREW	1	-	026422	X	M10X65
13	14M7167	LOCK NUT	1	-	026422	X	M10
14	Z30948	CHAIN SPROCKET	1	-	026422	X	Z = 60
15	19M7139	CAP SCREW	3	-	026422	X	M8X20
16	12M7008	LOCK WASHER	3	-	026422	X	8MM
17	Z33127	SPACER	1	-	026422	X	
18	L18947	WASHER	AR	-	026422	X	
19	Z30929	CHAIN SPROCKET	1	-	026422	X	Z = 13
20	34M7041	SPRING PIN	1	-	026422	X	6X30MM
21	AZ19536	LINK CHAIN	2	-	026422	X	L = 77, INCL KEYS 24,25
22	Z21765	SPACER	2	-	026422	X	
23	58M7004	LUBRICATION FITTING	1	-	026422	X	M6X1
24	AL14207	LINK	AR	-	026422	X	
25	AZ12881	LINK	AR	-	026422	X	

COPYRIGHT©1994 - 2008 DEERE & COMPANY Moline, Illinois All rights reserved

(PC4146) 955 Combine

(2H02) CHAINS
CHAINES
KETTEN
CATENE
CADENAS
DRIVKEDJOR

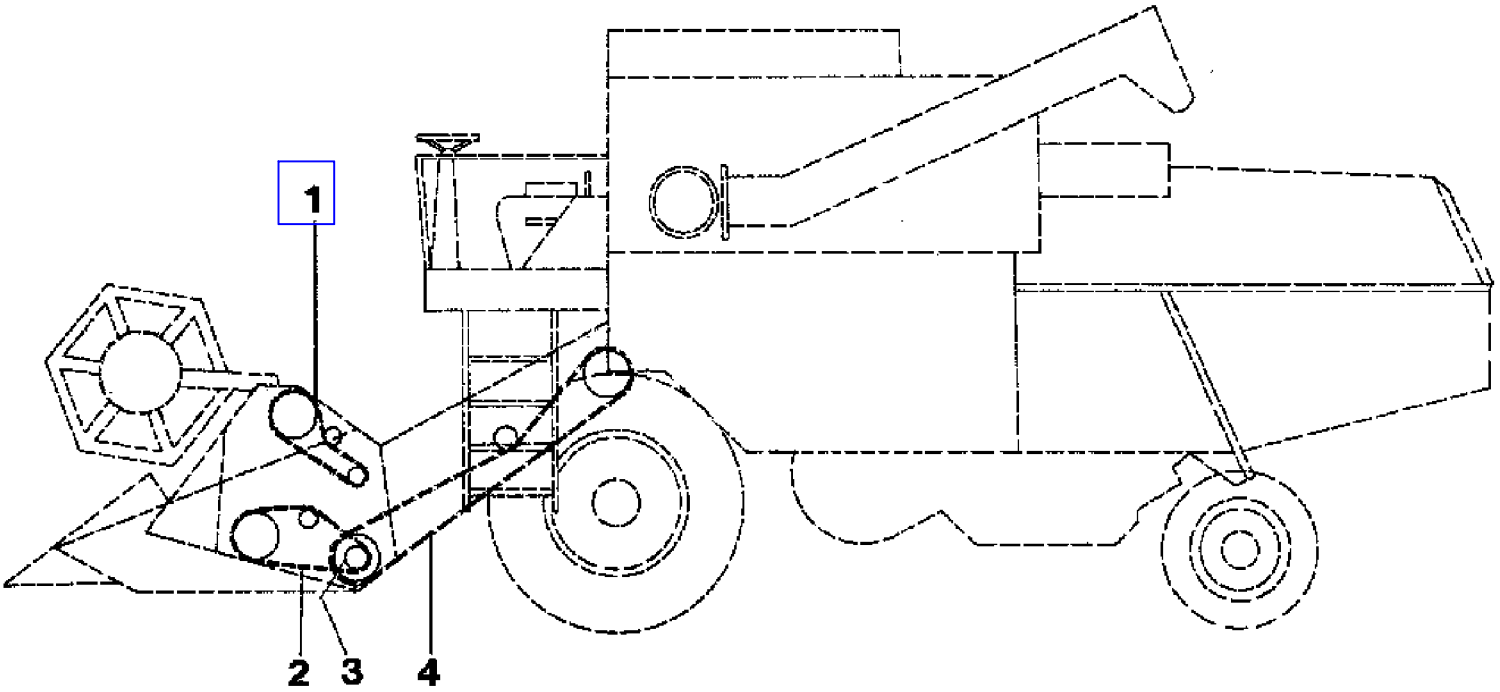

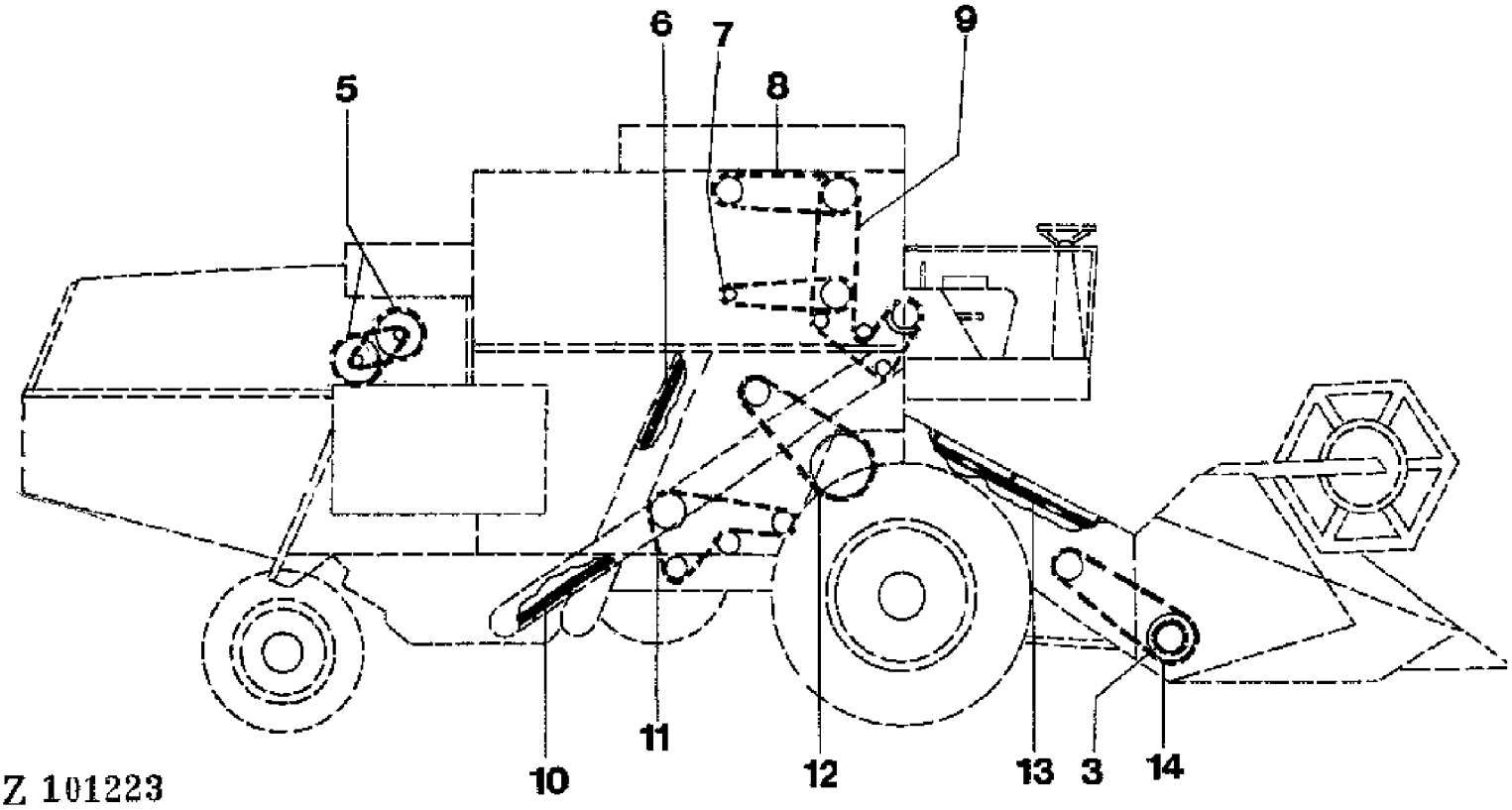

COPYRIGHT©1994 - 2008 DEERE & COMPANY Moline, Illinois All rights reserved

(2H02) CHAINS
CHAINES
KETTEN
CATENE
CADENAS
DRIVKEDJOR

KEY	PART NO.	PART NAME	QTY	SERIAL NO.		955	REMARKS
1	AZ19336	LINK CHAIN	1			X	L = 93
2	AZ19396	LINK CHAIN	1			X	L = 99
3	AN102383	LINK CHAIN	2			X	AR, L = 13
4	AZ19133	LINK CHAIN	1		- 024836	X	L = 195
	AZ19482	LINK CHAIN	1		- 024836	X	L = 219
	AZ28814	LINK CHAIN	1	024837	-	X	L = 193
	AZ28815	LINK CHAIN	1	024837	-	X	L = 218
5	AZ19536	LINK CHAIN	2		- 024836	X	L = 77
6	AZ10367	GATHERER CHAIN	1			X	L = 153
7	AZ10591	LINK CHAIN	1			X	L = 117
8	AZ32090	ROLLER CHAIN	1			X	L = 34 (SUB FOR AZ10363)
	AZ17183	LINK CHAIN	1			X	(A) L = 60
9	AZ23911	LINK CHAIN	1			X	L = 127
	AZ10362	LINK CHAIN	1			X	L = 132
10	AZ24219	LINK CHAIN	1			X	L = 156
11	AZ10279	LINK CHAIN	1			X	L = 122
12	AZ18000	LINK CHAIN	1			X	L = 107
13	AZ24715	LINK CHAIN	1			X	L = 85
	AZ27683	LINK CHAIN	1			X	L = 85
	AZ18672	GATHERER CHAIN	1			X	L = 87
	AZ24242	GATHERER CHAIN	1			X	L = 87
	AZ24728	GATHERER CHAIN	1			X	L = 98
	AZ24237	GATHERER CHAIN	1			X	L = 100
14	AZ25031	LINK CHAIN	1			X	AR, L = 88

(A) ONLY WITH GRAIN TANK EXTENSION
UNIQUEMENT AVEC REHAUSSE DE TREMIE
NUR BEI KORNTANKAUFSATZ
SOLO CON ESTENZIONE DE SERBATOIO GRANO
SOLO CON EXTENSION P.TANQUE DE GRANO
ENDAST VID SPANNMALSTANK-FORHOJNING

COPYRIGHT©1994 - 2008 DEERE & COMPANY Moline, Illinois All rights reserved

(1G14) CLUTCH
EMBRAYAGE
KUPPLUNG
FRIZIONE
EMBRAGUE
KOPPLING

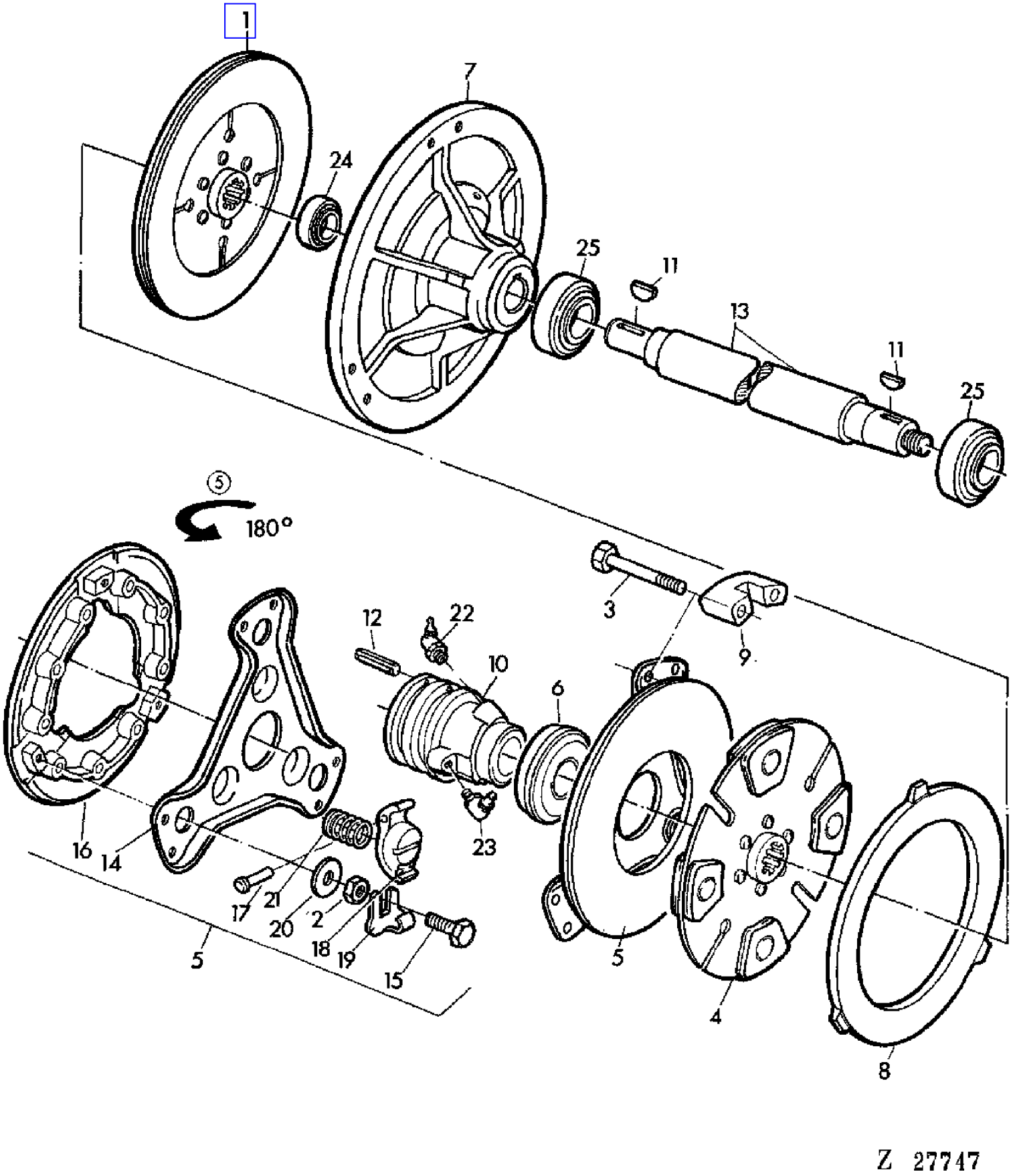

COPYRIGHT©1994 - 2008 DEERE & COMPANY Moline, Illinois All rights reserved

(PC4146) 955 Combine

(1G14) CLUTCH
EMBRAYAGE
KUPPLUNG
FRIZIONE
EMBRAGUE
KOPPLING

KEY	PART NO.	PART NAME	QTY	SERIAL NO.	955	REMARKS
1	AH12305	DRIVER	1	- 026952	X	
2	14H882	NUT	3	- 026952	X	5/16"
3	19H1907	CAP SCREW	6	- 026952	X	5/16"X2-3/4"
4	AH65439	CLUTCH DISK	1	- 026952	X	
5	AH65440	CLUTCH PLATE	1	- 026952	X	ASSY, INCL KEYS 2,14-21
6	AM3983T	THRUST BEARING	1	- 026952	X	
7	H10032	WHEEL	1	- 026952	X	
8	Z11015	CLUTCH PLATE	1	- 026952	X	(SUB FOR H10037)
9	H10739	SPACER	3	- 026952	X	
10	H10740	HOUSING	1	- 026952	X	
11	26H41	SHAFT KEY	2	- 026952	X	
12	34H270	SPRING PIN	2	- 026952	X	5/32"X1-1/2"
13	Z32600	SHAFT	1	- 026952	X	
14	H33689	BRACKET	1	- 026952	X	
15	H61022	CAP SCREW	3	- 026952	X	
16	H64934	CLUTCH PLATE	1	- 026952	X	
17	T11700	PIN	3	- 026952	X	
18	T11701	LEVER	3	- 026952	X	
19	T13267	CLIP	3	- 026952	X	
20	T13269	WASHER	3	- 026952	X	
21	T17911	SPRING	3	- 026952	X	
22	JD7788	LUBRICATION FITTING	3	- 026952	X	
23	JD7806	LUBRICATION FITTING	1	- 026952	X	
24	JD8542	BALL BEARING	1	- 026952	X	
25	JD10089	BALL BEARING	2	- 026952	X	(SUB FOR JD9301)

COPYRIGHT©1994 - 2008 DEERE & COMPANY Moline, Illinois All rights reserved

(1G20) CLUTCH
EMBRAYAGE
KUPPLUNG
FRIZIONE
EMBRAGUE
KOPPLING

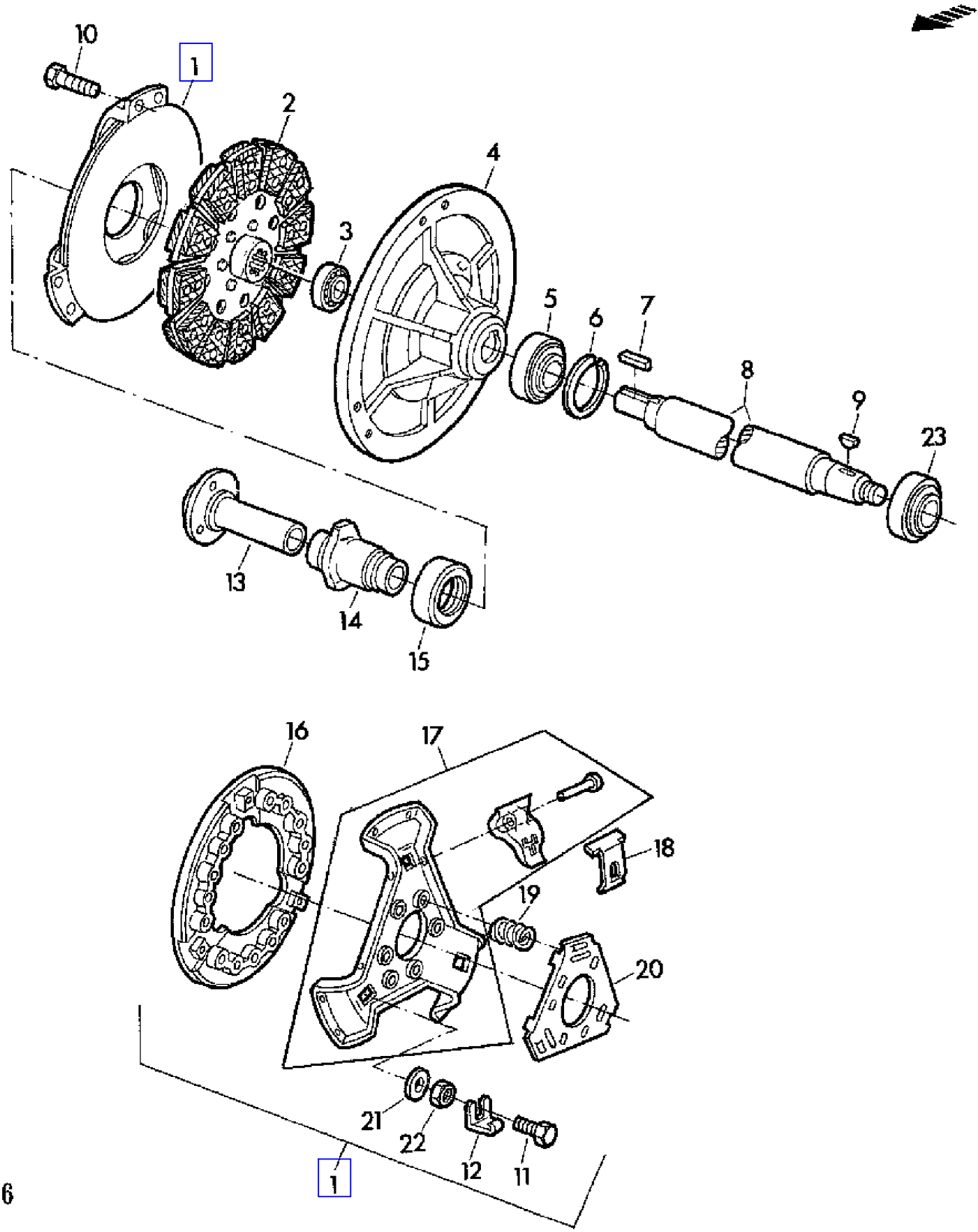

COPYRIGHT©1994 - 2008 DEERE & COMPANY Moline, Illinois All rights reserved

(PC4146) 955 Combine

(1G20) CLUTCH
EMBRAYAGE
KUPPLUNG
FRIZIONE
EMBRAGUE
KOPPLING

KEY	PART NO.	PART NAME	QTY	SERIAL NO.		955	REMARKS
1	AH84956	CLUTCH	1	026953	-	X	ASSY
2	AZ40096	CLUTCH DISK	1	026953	-	X	(SUB FOR AZ24248, AZ30976)
3	AZ20825	BALL BEARING	1	026953	-	X	
4	Z11389	CLUTCH PLATE	1	026953	-	X	(SUB FOR H84673)
5	JD10087	BALL BEARING	1	026953	-	X	(SUB FOR JD8524)
6	40M1871	SNAP RING	1	026953	-	X	
7	T3142H	SHAFT KEY	1	026953	-	X	
8	Z34712	SHAFT	1	026953	-	X	
9	26H41	SHAFT KEY	1	026953	-	X	
10	19H1936	CAP SCREW	6	026953	-	X	3/8"X3/4"
11	H81534	CAP SCREW	3	026953	-	X	
12	H81536	CLIP	3	026953	-	X	
13	Z10974	HUB	1	026953	-	X	
14	Z10975	HOUSING	1	026953	-	X	
15	JD39117	THROW-OUT BEARING	1	026953	-	X	
16	H85361	CLUTCH PLATE	1	026953	-	X	
17	AH86586	PLATE	1	026953	-	X	ASSY
18	T35298	LINK	3	026953	-	X	
19	H85363	SPRING	6	026953	-	X	
20	T35300	RING	1	026953	-	X	
21	H81535	WASHER	3	026953	-	X	
22	H81537	NUT	3	026953	-	X	
23	JD10089	BALL BEARING	1	026953	-	X	(SUB FOR JD9301)

COPYRIGHT©1994 - 2008 DEERE & COMPANY Moline, Illinois All rights reserved

(2E03) CLUTCH ATTACHMENT FOR HYDRAULIC LINE
RACCORD DE CANALISATION HYDRAULIQUE
KUPPLUNGSSTUECK FUER HYDRAULIKLEITUNG
RACCORDO DI TUBAZIONE IDRAULICA
ACOPLAMIENTO PARA TUBERIA HIDRAULICA
KOPPLING FOR HYDRAULLEDNING

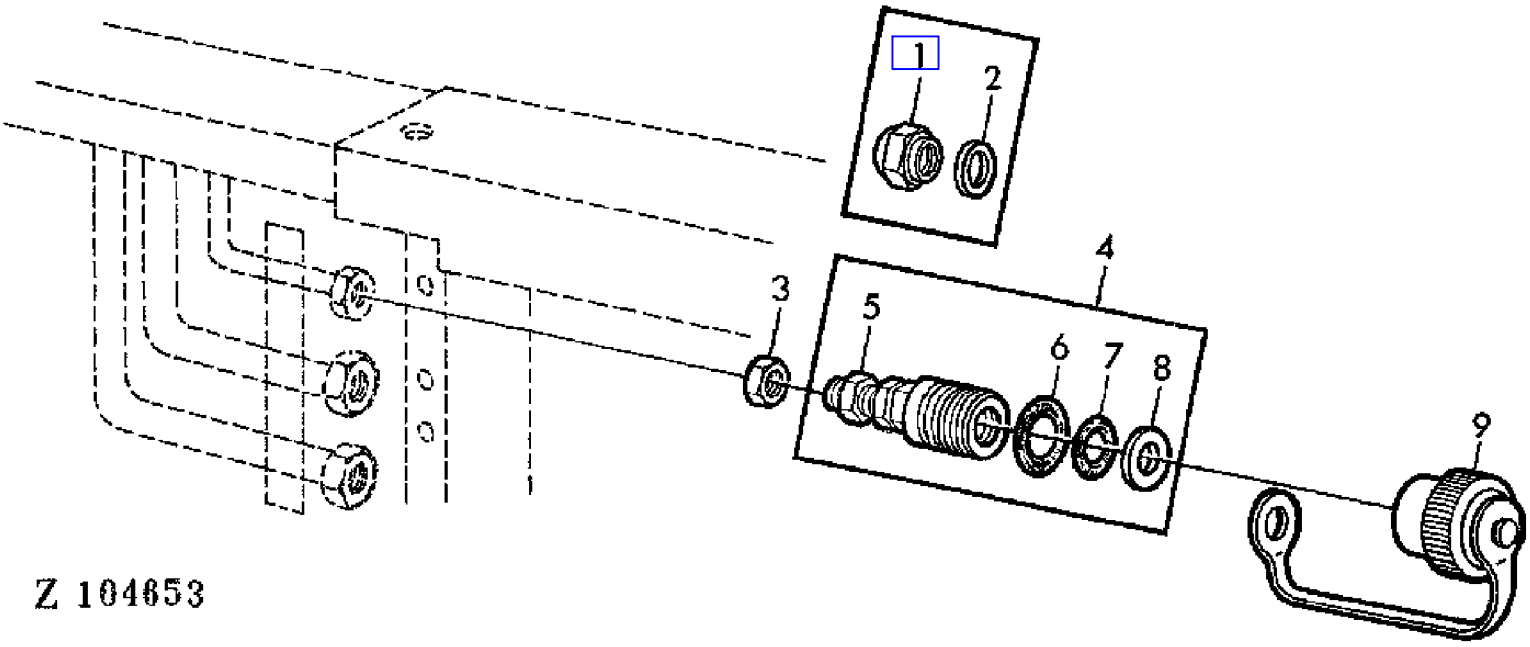

COPYRIGHT©1994 - 2008 DEERE & COMPANY Moline, Illinois All rights reserved

(2E03) CLUTCH ATTACHMENT FOR HYDRAULIC LINE
RACCORD DE CANALISATION HYDRAULIQUE
KUPPLUNGSSTUECK FUER HYDRAULIKLEITUNG
RACCORDO DI TUBAZIONE IDRAULICA
ACOPLAMIENTO PARA TUBERIA HIDRAULICA
KOPPLING FOR HYDRAULLEDNING

KEY	PART NO.	PART NAME	QTY	SERIAL NO.	955	REMARKS
1	Z36276	ADAPTER	1	- XXXX	X	(A) (FOR AZ25220)
2	51M4236	RING	1	- XXXX	X	(A) 14X18MM (FOR AZ25220)
3	14H832	NUT	1		X	9/16"
4	AZ34272	EXTERNAL HALF COUPLER	1		X	(A) (SUB FOR AZ25220)
5	14H812	NUT	1		X	3/8"
6	Z29863	O-RING	1		X	
7	Z29864	O-RING	1		X	
8	Z29865	BACK-UP RING	1		X	
9	Z29904	COVER	1		X	

(A) WITH U.S.CUTTING PLATFORMS ONLY
UNIQUEMENT POUR PLATES-FORMES DE COUPE US
NUR BEI US-SCHNEIDWERKEN
SOLO PER PIATTAFORME DI TAGLIO US
PLATAFORMAS DE CORTE EE.UU.SOLAMENTE
ENDAST FOR US SKARBORD

COPYRIGHT©1994 - 2008 DEERE & COMPANY Moline, Illinois All rights reserved

(2B17) CLUTCH CYLINDER
CYLINDRE D'EMBRAYAGE
KUPPLUNG-HYDRAULIKZYLINDER
CILINDRO SECONDARIO PER FRIZIONE
CILINDRO HIDRAULICO DEL EMBRAGUE
ARBETS-CYLINDER FOR KOPPLING

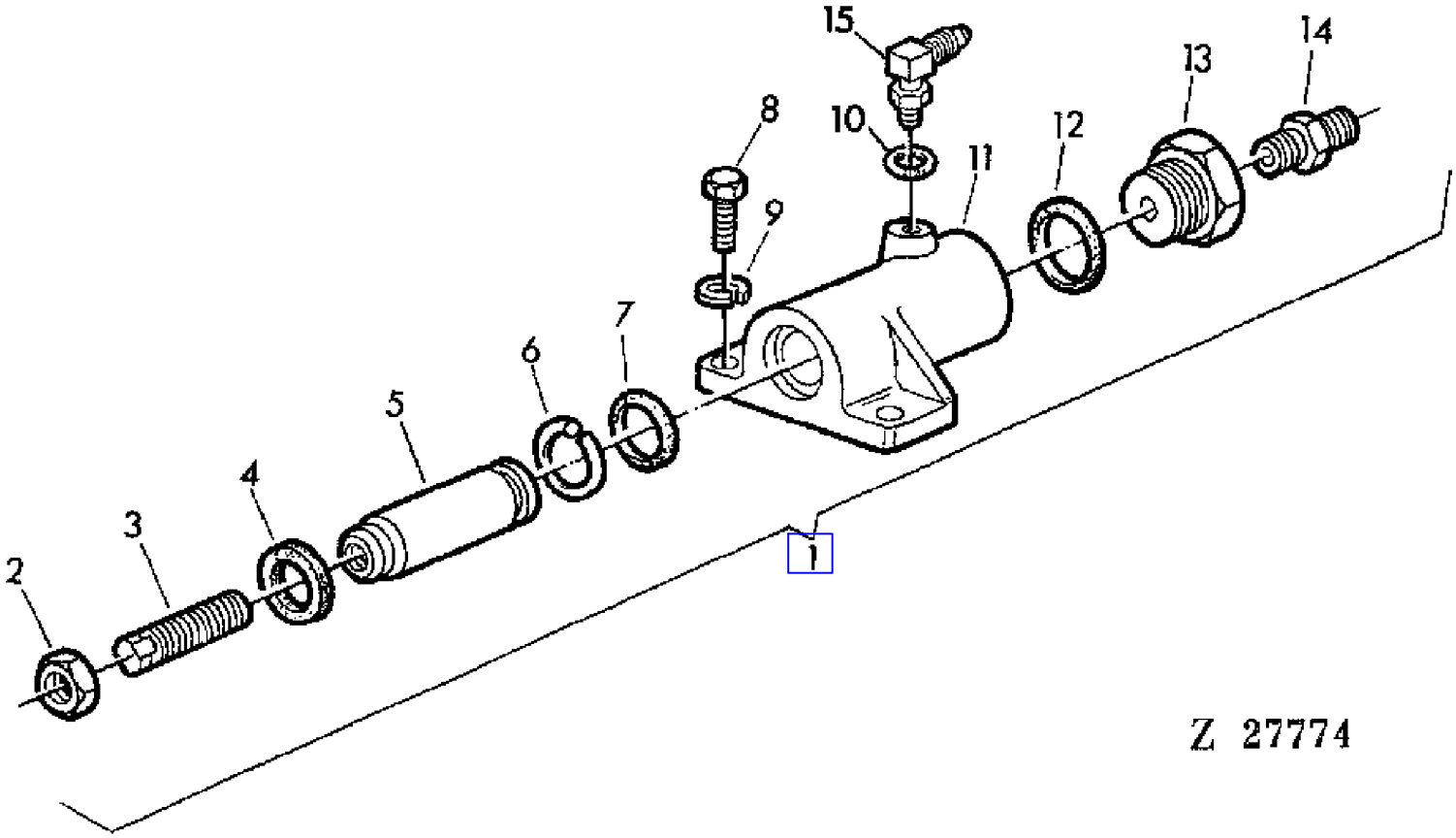

COPYRIGHT©1994 - 2008 DEERE & COMPANY Moline, Illinois All rights reserved

(2B17) CLUTCH CYLINDER
CYLINDRE D'EMBRAYAGE
KUPPLUNG-HYDRAULIKZYLINDER
CILINDRO SECONDARIO PER FRIZIONE
CILINDRO HIDRAULICO DEL EMBRAGUE
ARBETS-CYLINDER FOR KOPPLING

KEY	PART NO.	PART NAME	QTY	SERIAL NO.	955	REMARKS
1	AZ27757	HYDRAULIC CYLINDER	1		X	ASSY, INCL KEYS 2-7,10-15
2	14H821	NUT	1		X	5/8"
3	Z30200	SET SCREW	1		X	
4	Z30207	SCRAPER RING	1		X	
5	Z30210	PLUNGER	1		X	
6	40M6801	SNAP RING	1		X	
7	R29463	O-RING	1		X	
8	19H1731	CAP SCREW	2		X	3/8"X1"
9	12H304	LOCK WASHER	2		X	3/8"
10	R26287	O-RING	1		X	
11	Z10697	HOUSING	1		X	
12	U13639	O-RING	1		X	
13	Z30201	FITTING	1		X	
14	Z34737	HYD. QUICK-CONNECT COUPLER	1		X	
15	AR26746	ELBOW FITTING	1		X	

COPYRIGHT©1994 - 2008 DEERE & COMPANY Moline, Illinois All rights reserved

(1G12) CLUTCH HOUSING
CARTER D'EMBRAYAGE
KUPPLUNGSGEHAEUSE
SCATOLA FRIZIONE
CARTER DEL EMBRAGUE
KOPPLINGSHUS

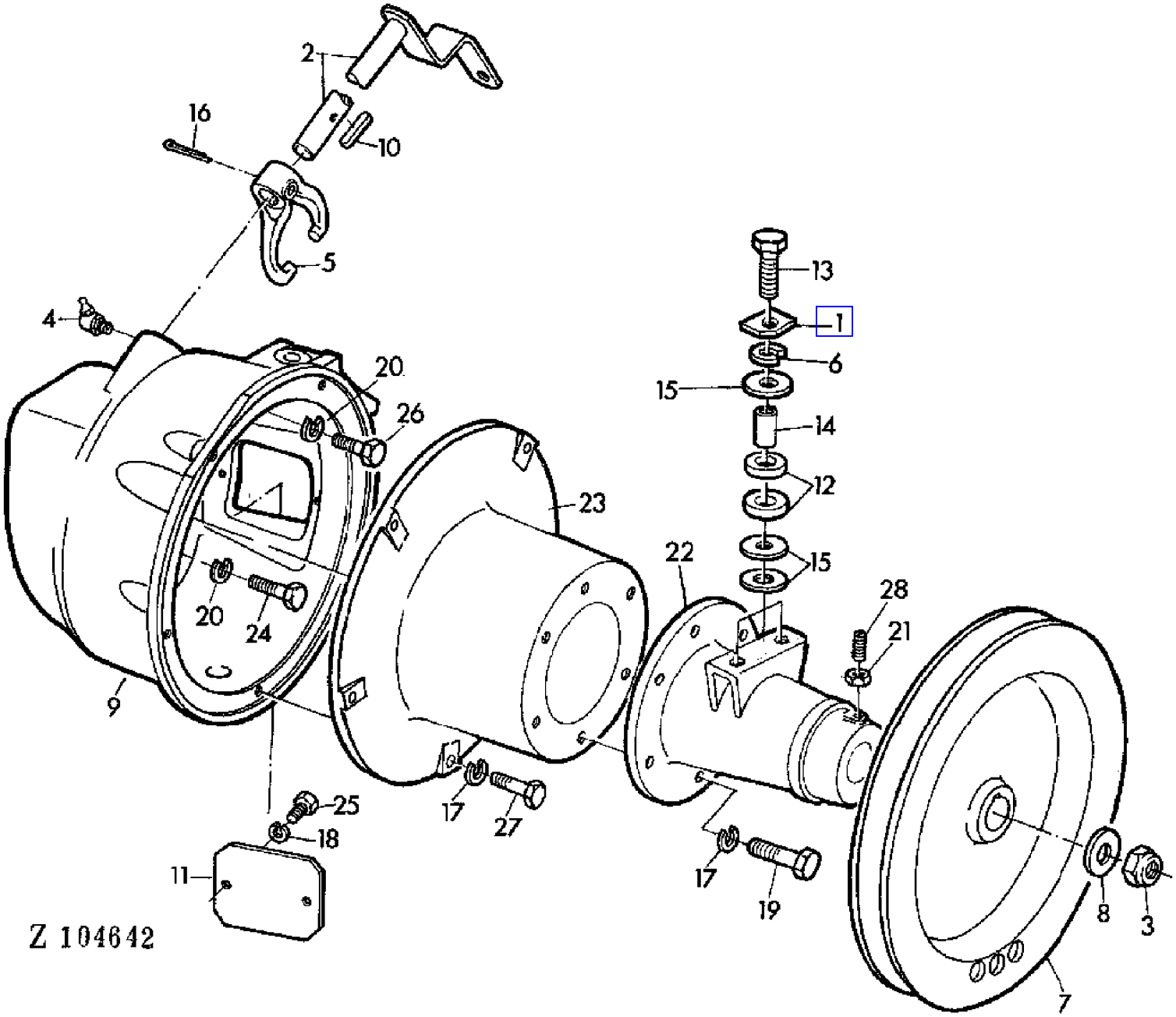

COPYRIGHT©1994 - 2008 DEERE & COMPANY Moline, Illinois All rights reserved

(PC4146) 955 Combine

(1G12) CLUTCH HOUSING
CARTER D'EMBRAYAGE
KUPPLUNGSGEHAEUSE
SCATOLA FRIZIONE
CARTER DEL EMBRAGUE
KOPPLINGSHUS

KEY	PART NO.	PART NAME	QTY	SERIAL NO.			REMARKS
1	P48682	CLIP	2		-	026952	
2	AZ18425	SHAFT	1		-	026952	
3	CM10111	LOCK NUT	1		-	026952	5/8"
4	JD7788	LUBRICATION FITTING	1		-	026952	
5	H10393	FORK	1		-	026952	
6	12H301	LOCK WASHER	1		-	026952	1/2"
7	H11497	PULLEY	1		-	026952	
8	H20895	WASHER	1		-	026952	
9	H64039	HOUSING	1		-	026952	
10	P27895	SHAFT KEY	1		-	026952	
11	P46405	COVER	1		-	026952	
12	P46413	ABSORBER	2		-	026952	
13	19H2060	CAP SCREW	1		-	026952	1/2"X3"
14	Z32610	SPACER	1		-	026952	
15	Z27661	WASHER	4		-	026952	
16	11H237	COTTER PIN	1		-	026952	1/8"X2"
17	12H304	LOCK WASHER	10		-	026952	3/8"
18	12M7008	LOCK WASHER	2		-	026952	8MM
19	19H2545	CAP SCREW	5		-	026952	3/8"X1-3/8"
20	12M7014	LOCK WASHER	6		-	026952	12MM
21	14H850	NUT	2		-	026952	1/4"
22	Z10845	HOUSING	1		-	017447	
	Z11164	HOUSING	1	017448	-	026952	
23	Z10844	HOUSING	1		-	026952	
24	19H1740	CAP SCREW	3		-	026952	7/16"X1-3/4"
25	19H1813	CAP SCREW	2		-	026952	5/16"X5/8"
26	19H1821	CAP SCREW	2		-	026952	7/16"X1-1/4"
27	19H2552	CAP SCREW	5		-	026952	3/8"X1-1/8"
28	22H902	SET SCREW	2		-	026952	1/4"X1"

COPYRIGHT©1994 - 2008 DEERE & COMPANY Moline, Illinois All rights reserved

(1G16) CLUTCH HOUSING,DRIVE SHEAVE
CARTER D'EMBRAYAGE,POULIE DE COMMANDE
KUPPLUNGSGEHAEUSE,ANTRIEBSSCHEIBE
SCATOLA FRIZIONE,PULEGGIA COMANDO
CARTER DEL EMBRAGUE,POLEA DE ACCIONAMIENTO
KOPPLINGSHUS,DRIVREMSKIVA

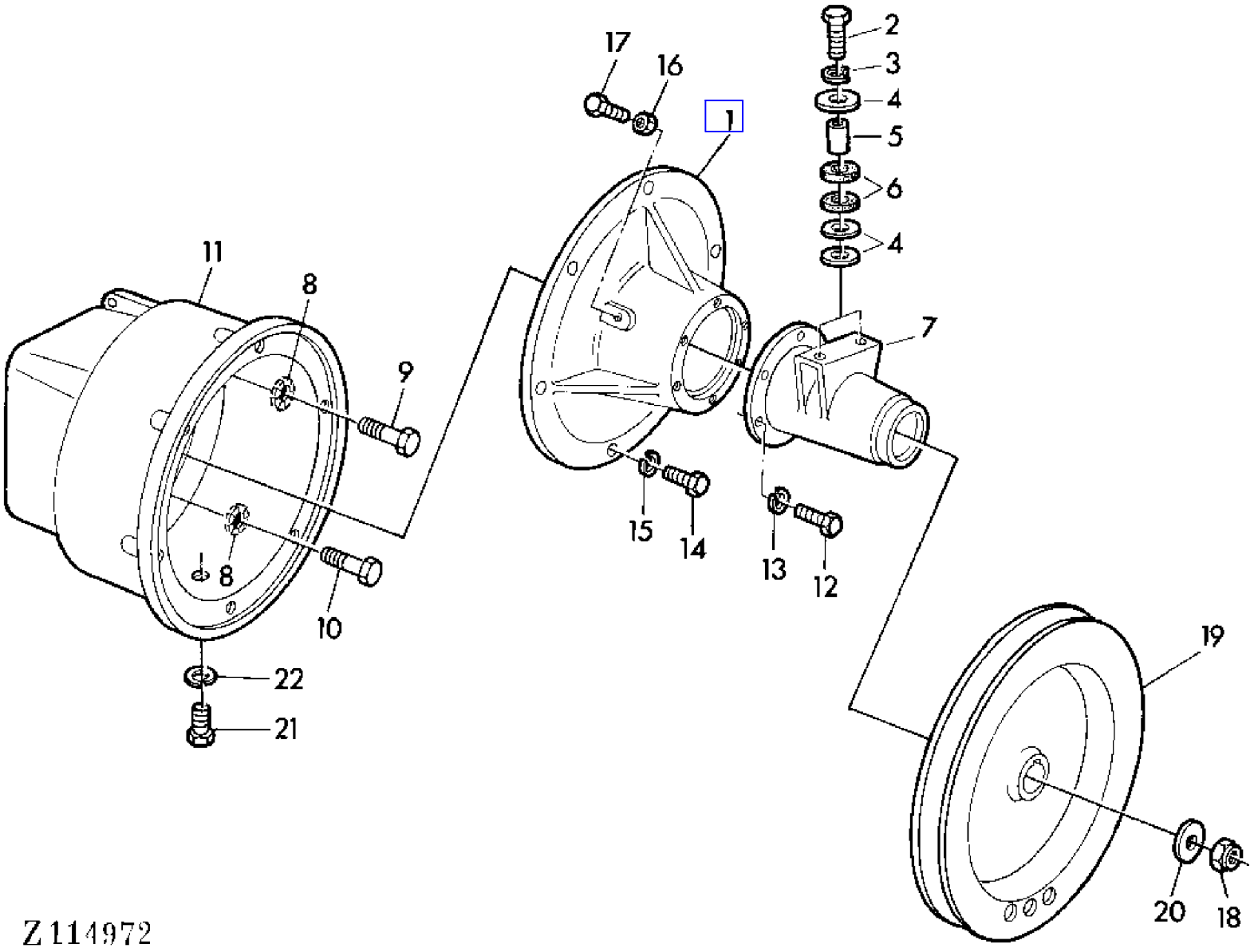

COPYRIGHT©1994 - 2008 DEERE & COMPANY Moline, Illinois All rights reserved

(1G16) CLUTCH HOUSING,DRIVE SHEAVE
CARTER D'EMBRAYAGE,POULIE DE COMMANDE
KUPPLUNGSGEHAEUSE,ANTRIEBSSCHEIBE
SCATOLA FRIZIONE,PULEGGIA COMANDO
CARTER DEL EMBRAGUE,POLEA DE ACCIONAMIENTO
KOPPLINGSHUS,DRIVREMSKIVA

KEY	PART NO.	PART NAME	QTY	SERIAL NO.		955	REMARKS
1	Z10971	FLANGE	1	026953	-	X	
2	19H2060	CAP SCREW	2	026953	-	X	1/2"X3"
3	12H301	LOCK WASHER	2	026953	-	X	1/1"
4	Z27661	WASHER	AR	026953	-	X	
5	Z32610	SPACER	2	026953	-	X	
6	P46413	ABSORBER	4	026953	-	X	
7	Z11230	HOUSING	1	026953	-	X	
8	H20551	LOCK WASHER	5	026953	-	X	
9	19H1821	CAP SCREW	2	026953	-	X	7/16"X1-1/4"
10	19H1740	CAP SCREW	3	026953	-	X	7/16"X1-3/4"
11	Z11204	HOUSING	1	026953	-	X	(ORD W/ (2) Z35658, (2) Z35659)
12	19H1905	CAP SCREW	6	026953	-	X	5/16"X1"
13	12M7008	LOCK WASHER	6	026953	-	X	8MM
14	19H2461	CAP SCREW	6	026953	-	X	3/8"X1-3/4"
15	12H304	LOCK WASHER	6	026953	-	X	3/8"
16	14H785	NUT	2	026953	-	X	5/16"
17	Z34710	CAP SCREW	2	026953	-	X	
18	CM10111	LOCK NUT	1	026953	-	X	
19	H11497	PULLEY	1	026953	-	X	
20	H20895	WASHER	1	026953	-	X	
21	19M8028	CAP SCREW	1			X	M8X8
22	12M7008	LOCK WASHER	1			X	8MM

COPYRIGHT©1994 - 2008 DEERE & COMPANY Moline, Illinois All rights reserved

(2B16) CLUTCH MASTER CYLINDER
MAITRE-CYLINDRE DE L'EMBRAYAGE
KUPPLUNGSHAUPTZYLINDER
CILINDRO PRINCIPALE DELLA FRIZIONE
CILINDRO PRINCIPAL DE EMBRAGUE
HUVUDCYLINDER FOR KOPPLINGEN

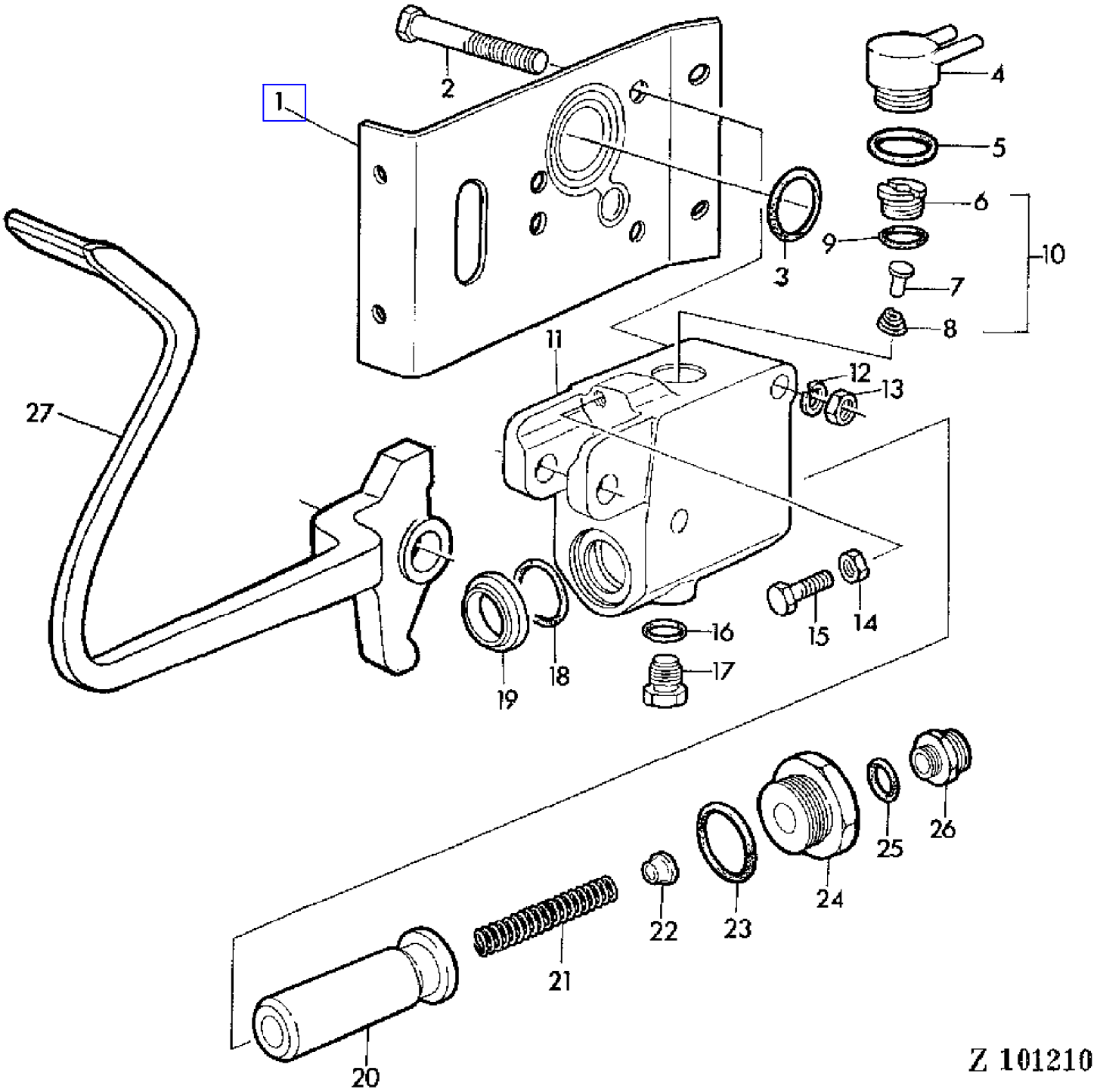

COPYRIGHT©1994 - 2008 DEERE & COMPANY Moline, Illinois All rights reserved

(2B16) CLUTCH MASTER CYLINDER
MAITRE-CYLINDRE DE L'EMBRAYAGE
KUPPLUNGSHAUPTZYLINDER
CILINDRO PRINCIPALE DELLA FRIZIONE
CILINDRO PRINCIPAL DE EMBRAGUE
HUVUDCYLINDER FOR KOPPLINGEN

KEY	PART NO.	PART NAME	QTY	SERIAL NO.		955	REMARKS
1	Z36749	BRACKET	1	027003	-	X	
2	19M7349	CAP SCREW	2	027003	-	X	M12X95
3	Z34697	O-RING	1	027003	-	X	
4	AZ21028	ADAPTER	1	027003	-	X	INCL KEY 5
5	A4730R	O-RING	1	027003	-	X	
6	.....	SEAT	1	027003	-	X	NSEP (ORD KEY 10)
7	.....	POPPET	1	027003	-	X	NSEP (ORD KEY 10)
8	.....	SPRING	1	027003	-	X	NSEP (ORD KEY 10)
9	R26906	O-RING	1	027003	-	X	(FOR AL23836) (ORD AL67574)
10	AL67574	VALVE	1	027003	-	X	INCL KEYS 6,7,8 (SUB FOR AL23836)
11	Z11272	HOUSING	1	027003	-	X	
12	12M7014	LOCK WASHER	2	027003	-	X	12MM
13	14M7031	NUT	2	027003	-	X	M12
14	14H812	NUT	1	027003	-	X	3/8"
15	19H1732	CAP SCREW	1	027003	-	X	3/8"X1-1/4"
16	R26375	O-RING	1	027003	-	X	
17	Z30204	PLUG	1	027003	-	X	
18	R29463	O-RING	1	027003	-	X	
19	Z30207	SCRAPER RING	1	027003	-	X	
20	Z30212	PLUNGER	1	027003	-	X	
21	Z39415	COMPRESSION SPRING	1	027003	-	X	
22	T21815	RETAINER	1	027003	-	X	
23	U13639	O-RING	1	027003	-	X	
24	Z30211	FITTING	1	027003	-	X	
25	R26448	O-RING	1	027003	-	X	
26	Z42193	FITTING	1	027003	-	X	(SUB FOR Z32964)
27	.....	PEDAL	1			X	SECTION 50

COPYRIGHT©1994 - 2008 DEERE & COMPANY Moline, Illinois All rights reserved

(1G18) CLUTCH OPERATING LINKAGE
TIMONERIE D'EMBRAYAGE
KUPPLUNGSAUSRUECKUNG
FORCELLA E ALBERO INNESTO FRIZIONE
MECANISMO DE MANDO DE EMBRAQUE
KOPPLINGENS MANOVERLANKAGE

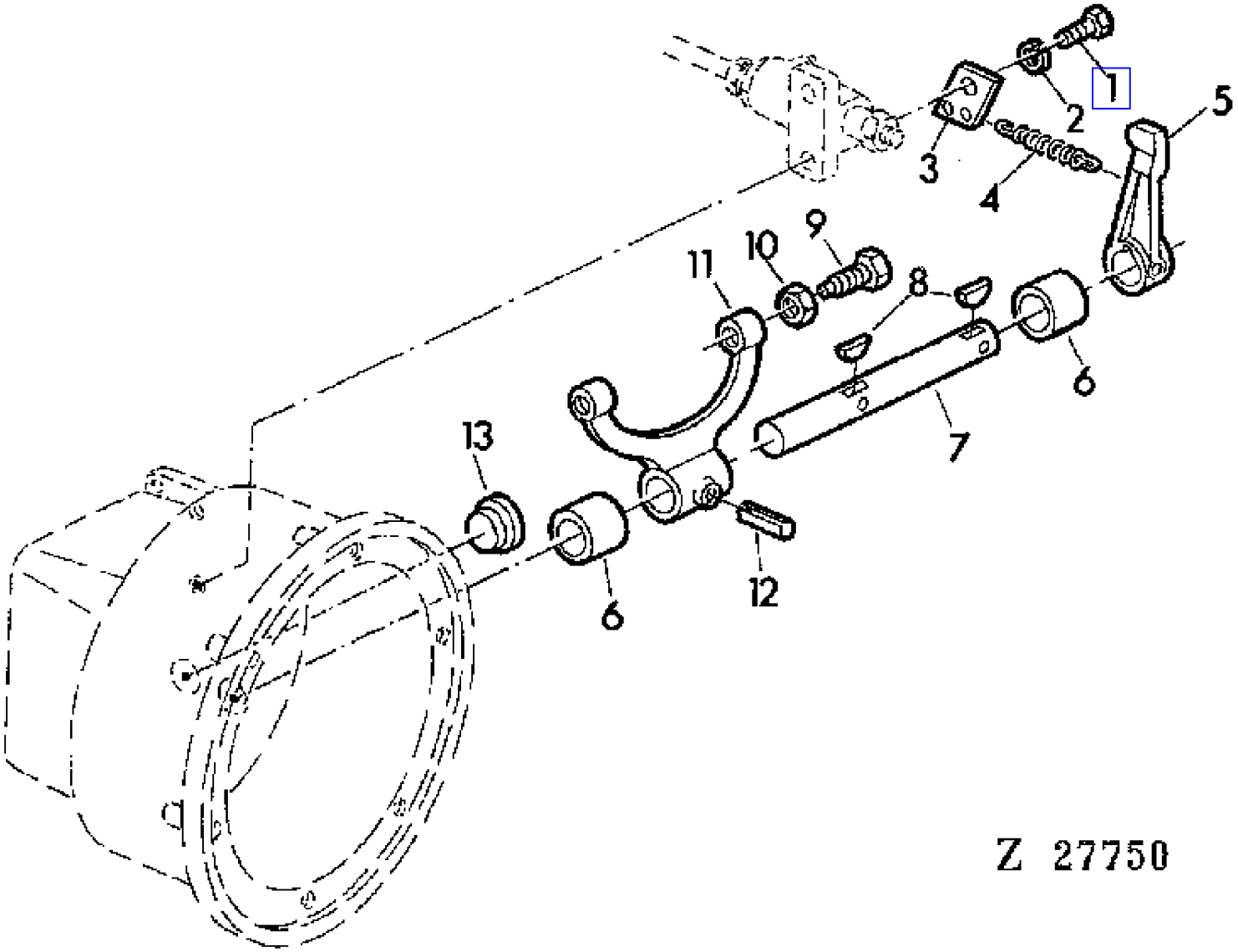

COPYRIGHT©1994 - 2008 DEERE & COMPANY Moline, Illinois All rights reserved

(1G18) CLUTCH OPERATING LINKAGE
TIMONERIE D'EMBRAYAGE
KUPPLUNGSAUSRUECKUNG
FORCELLA E ALBERO INNESTO FRIZIONE
MECANISMO DE MANDO DE EMBRAQUE
KOPPLINGENS MANOVERLANKAGE

KEY	PART NO.	PART NAME	QTY	SERIAL NO.		955	REMARKS
1	19H1731	CAP SCREW	2	026953	-	X	3/8"X1"
2	12H304	LOCK WASHER	2	026953	-	X	3/8"
3	Z34721	RETAINER	1	026953	-	X	
4	Z30447	SPRING	1	026953	-	X	
5	Z10976	LEVER	1	026953	-	X	
6	Z21764	SPACER	2	026953	-	X	OD = 32 MM
	Z35658	SPACER	2	026953	-	X	OD = 37 MM
7	Z34711	SHAFT	1	026953	-	X	
8	26H41	SHAFT KEY	2	026953	-	X	
9	22M2088	SET SCREW	2	026953	-	X	6X25MM
10	14M7027	NUT	2	026953	-	X	M6
11	Z10710	FORK	1	026953	-	X	
12	34H316	SPRING PIN	1	026953	-	X	1/2"
13	Z35659	PLUG	1	026953	-	X	

COPYRIGHT©1994 - 2008 DEERE & COMPANY Moline, Illinois All rights reserved

(1G10) CLUTCH OPERATING PARTS
COMMANDE DE L'EMBRAYAGE
KUPPLUNGSBETAETIGUNG
TIRANTERIA FRIZIONE
PIEZAS DE ACCIONAMIENTO DEL EMBRAGUE
KOPPLINGSLANKAGE

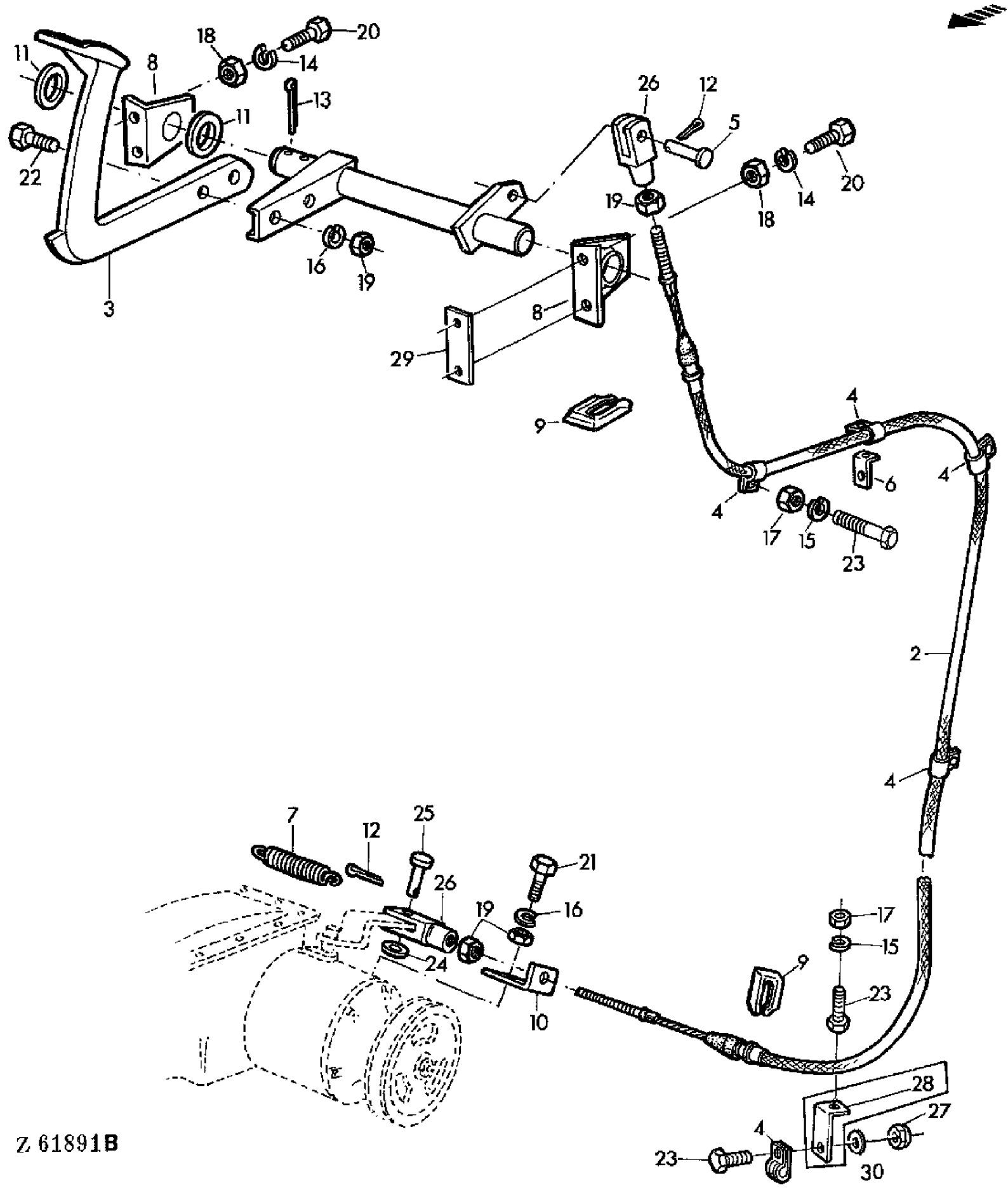

COPYRIGHT©1994 - 2008 DEERE & COMPANY Moline, Illinois All rights reserved

(1G10) CLUTCH OPERATING PARTS
COMMANDE DE L'EMBRAYAGE
KUPPLUNGSBETAETIGUNG
TIRANTERIA FRIZIONE
PIEZAS DE ACCIONAMIENTO DEL EMBRAGUE
KOPPLINGSLANKAGE

KEY	PART NO.	PART NAME	QTY	SERIAL NO.		955	REMARKS
1	AZ18400	SHAFT	1		- 026952	X	
2	AZ21467	PUSH PULL CABLE	1		- 005545	X	
	AZ24928	PUSH PULL CABLE	1	005546	- 026952	X	
3	Z10498	PEDAL	1		- 026952	X	
4	Z22067	CLAMP	5		- 026952	X	
5	Z24484	PIN	1		- 026952	X	
6	Z25613	HOLDER	1		- 026952	X	
7	Z25992	EXTENSION SPRING	1		- 026952	X	
8	Z28255	BEARING	2		- 026952	X	
9	Z29162	CLAMP	2		- 026952	X	
10	Z29744	HOLDER	1		- 026952	X	
11	L19105	WASHER	2		- 026952	X	
12	11M7011	COTTER PIN	2		- 026952	X	3X15MM
13	11M7024	COTTER PIN	2		- 026952	X	4X40MM
14	12M7008	LOCK WASHER	4		- 026952	X	8MM
15	12M7012	LOCK WASHER	2		- 026952	X	6MM
16	12M7013	LOCK WASHER	3		- 026952	X	10MM
17	14M7027	NUT	2		- 026952	X	M6
18	14M7029	NUT	4		- 026952	X	M8
19	14M7140	NUT	5		- 026952	X	M10
20	19M7139	CAP SCREW	4		- 026952	X	M8X20
21	19M7168	CAP SCREW	1		- 026952	X	M10X30
22	19M7169	CAP SCREW	2		- 026952	X	M10X35
23	19M7077	CAP SCREW	4		- 026952	X	M6X20
24	24M7106	WASHER	1		- 026952	X	10MM
25	45M6299	PIN	1		- 026952	X	
26	54M4422	YOKE	2		- 026952	X	
27	14M7165	LOCK NUT	1		- 026952	X	M6
28	Z29282	HOLDER	1		- 005545	X	
29	Z32631	STRAP	1		- 026952	X	
30	24M7088	WASHER	1		- 026952	X	6,6MM

COPYRIGHT©1994 - 2008 DEERE & COMPANY Moline, Illinois All rights reserved

(1G17) CLUTCH PEDAL
PEDALE D'EMBRAYAGE
KUPPLUNGSFUSSHEBEL
PEDALE FRIZIONE
PEDAL DEL EMBRAGUE
KOPPLINGSPEDAL

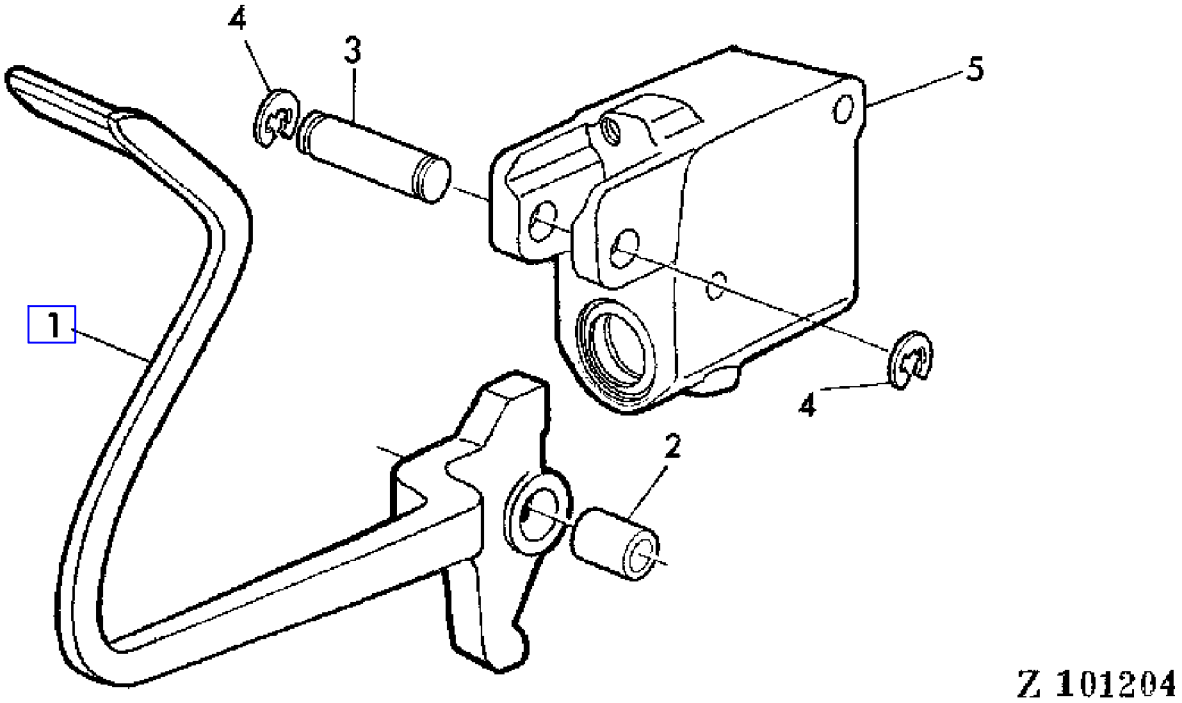

COPYRIGHT©1994 - 2008 DEERE & COMPANY Moline, Illinois All rights reserved

(1G17) CLUTCH PEDAL
PEDALE D'EMBRAYAGE
KUPPLUNGSFUSSHEBEL
PEDALE FRIZIONE
PEDAL DEL EMBRAGUE
KOPPLINGSPEDAL

KEY	PART NO.	PART NAME	QTY	SERIAL NO.		955	REMARKS
1	AZ29582	CHANNEL	1	026953	-	X	
2	B177R	BUSHING	1			X	
3	Z30203	PIN	1			X	
4	F2863R	SNAP RING	2			X	
5	.....	HOUSING	1			X	SECTION 70

COPYRIGHT©1994 - 2008 DEERE & COMPANY Moline, Illinois All rights reserved

(1D06) COLD WEATHER STARTING AID"THERMOSTART"
AIDE AU DEMARRAGE THERMOSTART
KALTSTARTANLAGE "THERMOSTART"
DISPOSITIVO AVVIAMENTO A FREDDO THERMOSTART"
DISPOSITIVO PARA EL ARRANQUE EN TIEMPO FRIO "THERMOSTART"
KALLSTARTSUTRUSTNING"THERMOSTART"

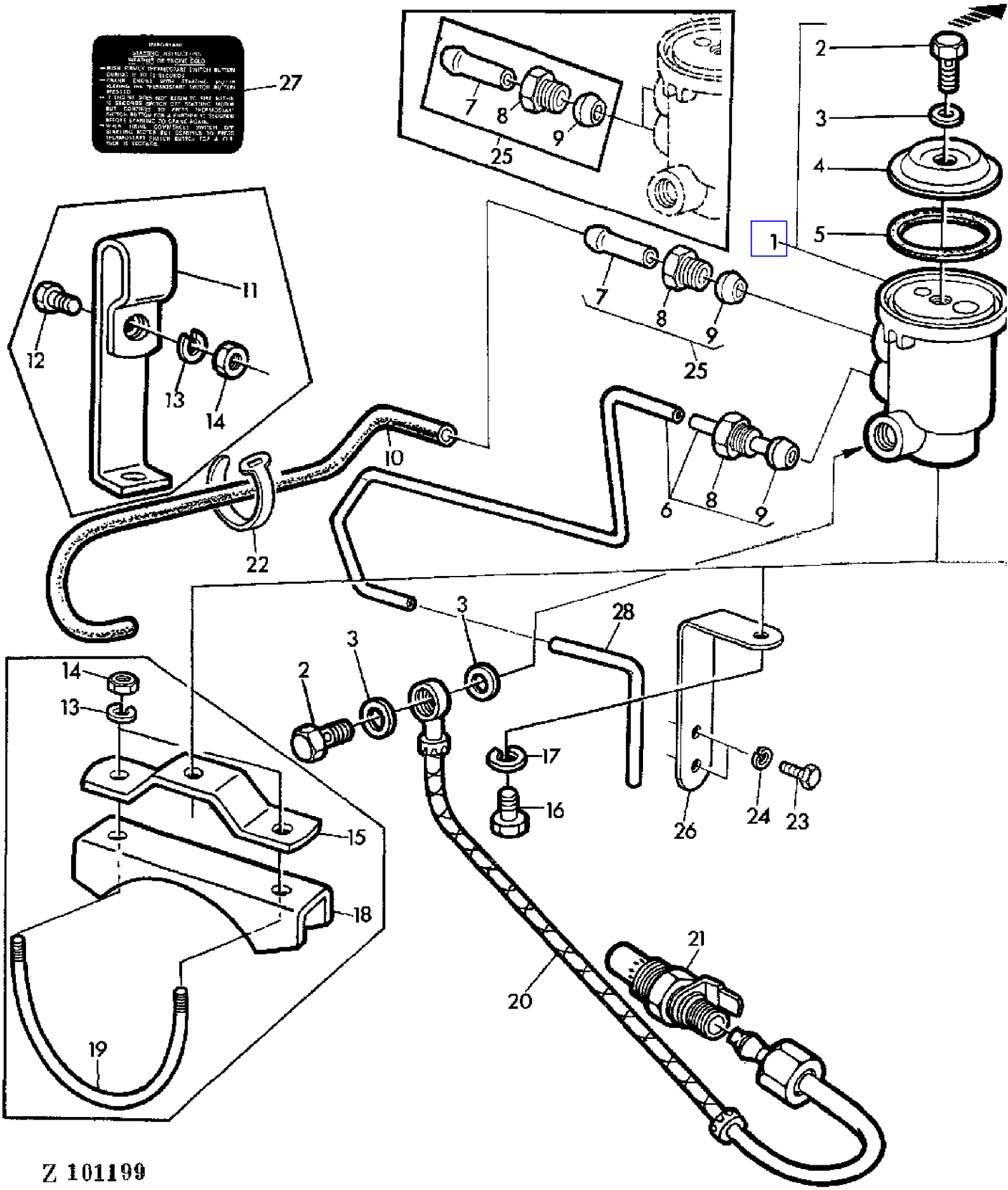

COPYRIGHT©1994 - 2008 DEERE & COMPANY Moline, Illinois All rights reserved

(1D06) COLD WEATHER STARTING AID"THERMOSTART"
AIDE AU DEMARRAGE THERMOSTART
KALTSTARTANLAGE "THERMOSTART"
DISPOSITIVO AVVIAMENTO A FREDDO THERMOSTART"
DISPOSITIVO PARA EL ARRANQUE EN TIEMPO FRIO "THERMOSTART"
KALLSTARTSUTRUSTNING"THERMOSTART"

KEY	PART NO.	PART NAME	QTY	SERIAL NO.			955	REMARKS
1	AT26140	RESERVOIR	1				X	ASSY, INCL KEYS 2-5 (SUB FOR DD11381)
2	CD12887	FITTING	2				X	
3	51M4230	RING	3				X	(SUB FOR CD12888)
4	T27974	COVER	1				X	
5	T27973	WASHER	1				X	
6	AR94128	FUEL LINE	1	410664	-		X	(A) ASSY, INCL KEYS 8,9
7	CD14805	HOSE FITTING	1				X	NSEP (ORD DD13407)
8	R62035	FITTING	2				X	NSEP (ORD AR94128, DD13407)
9	R62034	SLEEVE FITTING	2				X	
10	T28003	HOSE	1		-	410663	X	(A) NSEP, (ORD KIT R68281)
11	T27978	RETAINER	1		-	006489	X	
12	21H1023	SCREW	1		-	006489	X	1/4"X5/8"
13	12H302	LOCK WASHER	3		-	006489	X	1/4"
	12H302	LOCK WASHER	3		-	006489	X	1/4"
	12H302	LOCK WASHER	2	006490	-		X	1/4"
14	14H786	NUT	3		-	006489	X	1/4"
	14H786	NUT	2	006490	-		X	1/4"
15	CD13202	HOLDER	1		-	006489	X	
16	19H1894	CAP SCREW	1				X	3/8"X3/4"
17	12H304	LOCK WASHER	1				X	3/8"
18	CD13203	RETAINER	1		-	006489	X	
19	CD13204	BAIL	1		-	006489	X	
20	AR65440	HOSE	1		-	410663	X	(A) LGTH = 258 MM 10.15"
	AR94126	HOSE	1	410664	-		X	(A) LGTH = 365 MM 14.37"
21	AR63105	BURNER	1				X	
22	CD12892	TIE BAND	AR	006490	-		X	
23	19H2020	CAP SCREW	2	006490	-		X	5/16"X1/2"
24	12H303	LOCK WASHER	2	006490	-		X	5/16"
25	DD13407	HOSE FITTING	2		-	410663	X	(A) KIT, INCL KEYS 7-9
	DD13407	HOSE FITTING	1	410664	-		X	(A) KIT, INCL KEYS 7-9
26	CD14873	HOLDER	1	006490	-		X	
27	CD12932	DECAL	AR				X	ENGLISH
	CD12931	DECAL	AR				X	FRANCAIS
	CD12933	LABEL	AR				X	DEUTSCH
28	Z38664	FUEL LINE	1				X	
..	R68281	BULK HOSE	AR				X	LGTH = 1,5 M 59" (SUB FOR AT32064)

(A) ENGINE SERIAL NO.
NO SERIE MOTEUR
MOTOR-SERIENNUMMER
NUM.SERIE DEL MOTORE
NUM.SERIE DEL MOTOR
MOTORNS SERIENUMMER

COPYRIGHT©1994 - 2008 DEERE & COMPANY Moline, Illinois All rights reserved

(2G04) COMPRESSOR GUARD
GARANT DE COMPRESSEUR
SCHUTZE-KOMPRESSORANLAGE
GRIGLIA DI PROTEZIONE DEL COMPRESSORE
REJILLA PROTECTORA DEL COMPRESOR
SKYDDSGALLER FOR KOMPRESSOR

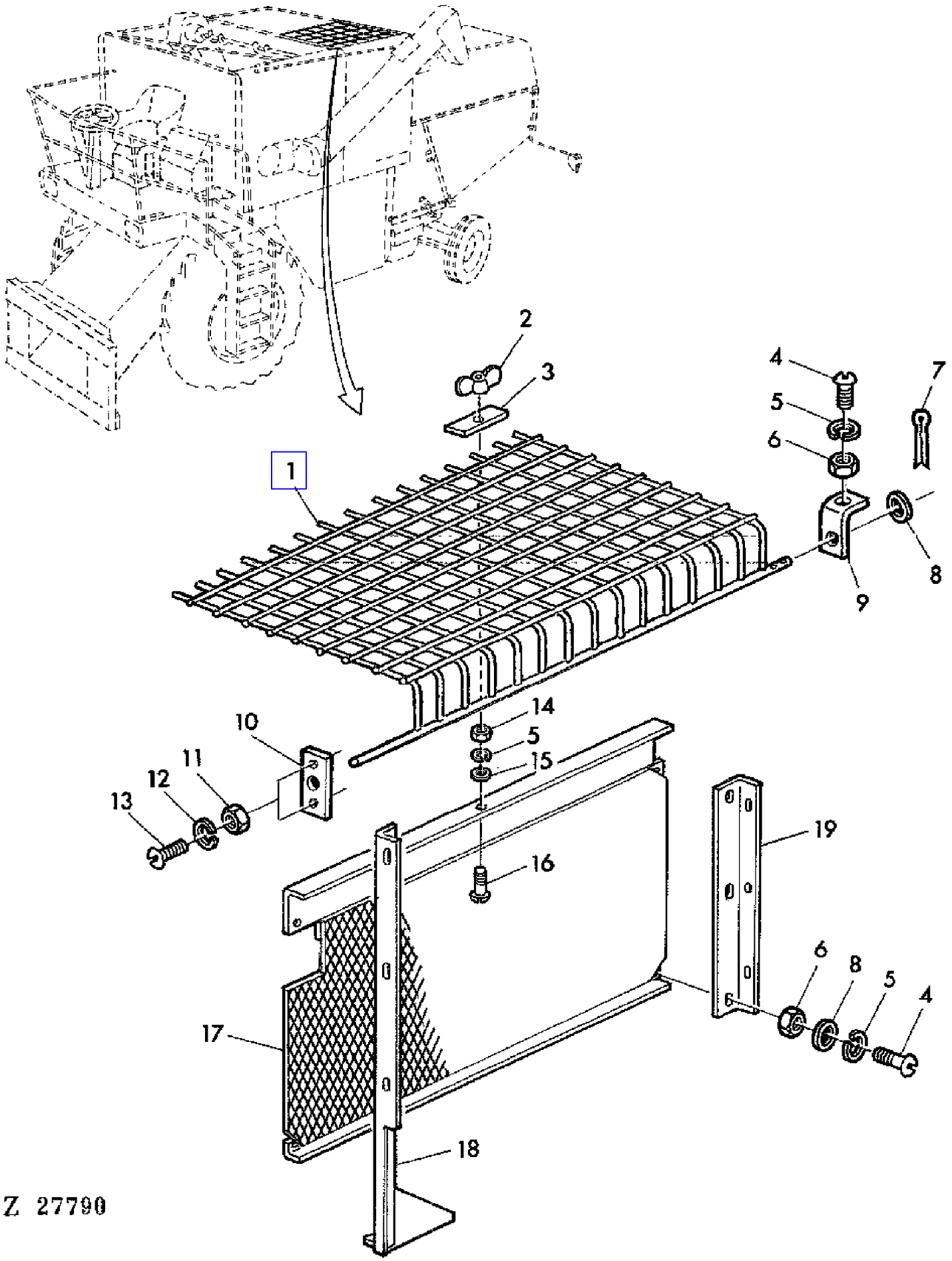

COPYRIGHT©1994 - 2008 DEERE & COMPANY Moline, Illinois All rights reserved

(2G04) COMPRESSOR GUARD
GARANT DE COMPRESSEUR
SCHUTZE-KOMPRESSORANLAGE
GRIGLIA DI PROTEZIONE DEL COMPRESSORE
REJILLA PROTECTORA DEL COMPRESOR
SKYDDSGALLER FOR KOMPRESSOR

KEY	PART NO.	PART NAME	QTY	SERIAL NO.	955	REMARKS
1	DA22639	GUARD	1		X	
2	Z20285	WING NUT	1		X	
3	CA22644	STRAP	1		X	
4	21M7081	SCREW	AR		X	M8X15
5	12M7008	LOCK WASHER	AR		X	8MM
6	14M7029	NUT	AR		X	M8
7	11M7010	SPRING PIN	AR		X	2X18MM
8	24M7055	WASHER	AR		X	8,4MM
9	CA22646	HOLDER	1		X	
10	CA22645	STRAP	1		X	
11	14M7027	NUT	AR		X	M6
12	12M7012	LOCK WASHER	AR		X	6MM
13	21M7031	SCREW	2		X	M6X15
14	14M7203	NUT	1		X	M8
15	24M7036	WASHER	1		X	9MM
16	21M7125	SCREW	1		X	M8X25
17	DA22635	GUARD	1		X	
18	DA22627	SUPPORT	1		X	
19	CA22640	ANGLE	1		X	

COPYRIGHT©1994 - 2008 DEERE & COMPANY Moline, Illinois All rights reserved

(3D11) COMPRESSOR-AIR CONDITIONED CAB
COMPRESSEUR-CABINE CLIMATISEE
KOMPRESSOR-KABINE MIT KLIMAANLAGE
COMPRESSORE-CABINA CONDIZIONATA
COMPRESOR-CABINA CON AIRE ACONDICIONADO
KOMPRESSOR-HYTT MED LUFTKONDITIONERING

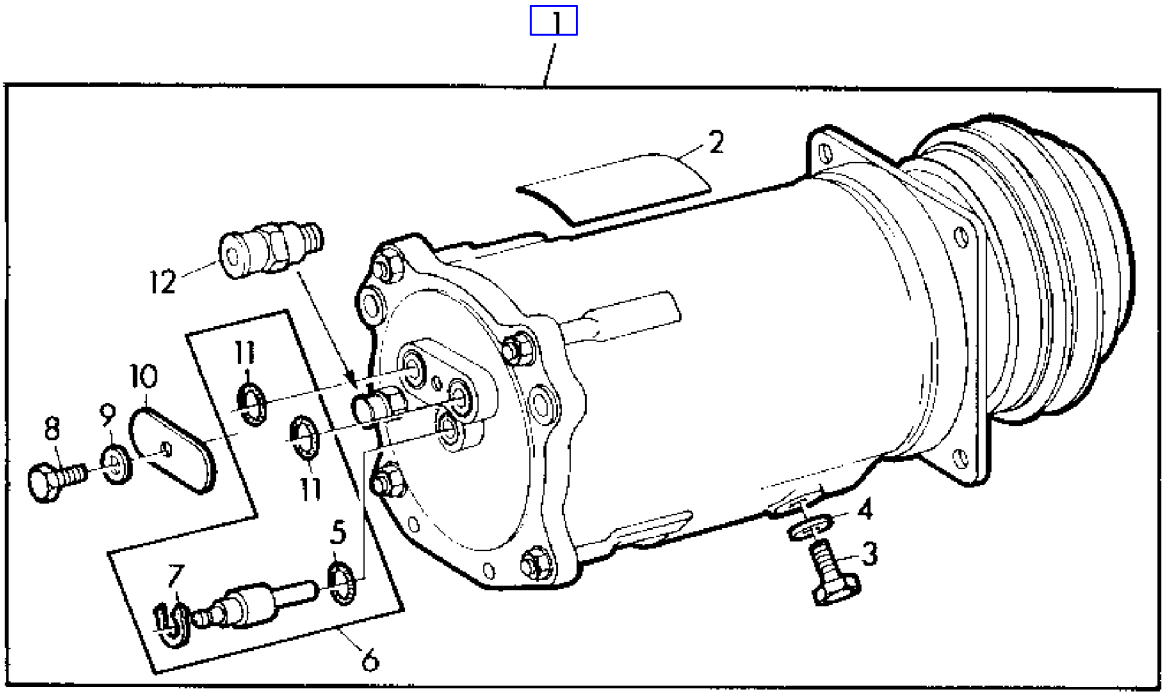

Z 107944

COPYRIGHT©1994 - 2008 DEERE & COMPANY Moline, Illinois All rights reserved

(3D11) COMPRESSOR-AIR CONDITIONED CAB
COMPRESSEUR-CABINE CLIMATISEE
KOMPRESSOR-KABINE MIT KLIMAANLAGE
COMPRESSORE-CABINA CONDIZIONATA
COMPRESOR-CABINA CON AIRE ACONDICIONADO
KOMPRESSOR-HYTT MED LUFTKONDITIONERING

KEY	PART NO.	PART NAME	QTY	SERIAL NO.	955	REMARKS
1	AR92109	COMPRESSOR	1		X	(SUB FOR AR77343) INCL KEYS 2-11,15
	TY6665	COMPRESSOR	1		X	(A) (SUB FOR TY6601)
2	R42822	LABEL	1		X	
3	R47233	PLUG	1		X	
4	R47234	WASHER	1		X	
5	32240	O-RING	1		X	
6	AR78501	KIT	1		X	
7	R63571	SNAP RING	1		X	
8	19H2522	CAP SCREW	1	- XXXX	X	AR, 3/8"X2"
	19M7170	CAP SCREW	1	XXXX -	X	AR, 10X50MM
9	24H1884	WASHER	1		X	13/32"X120"
10	R60171	STRAP	1		X	
11	R47235	O-RING	2		X	
12	AR49808	VALVE	1		X	

(A) SERVICE-EXCHANGE COMPRESSOR
COMPRESSEUR REVISE
UEBERHOLTER AUSTAUSCHKOMPRESSOR
COMPRESSORE RITOCCATO
COMPRESOR DE RECAMBIO REACONDICIONADO
KOMPRESSOR (UTBYTE)

COPYRIGHT©1994 - 2008 DEERE & COMPANY Moline, Illinois All rights reserved

(4A15) CONCAVE
CONTRE-BATTEUR
DRESCHKORB
CONTROBATTITORE
CONCAVO
SLAGSKO

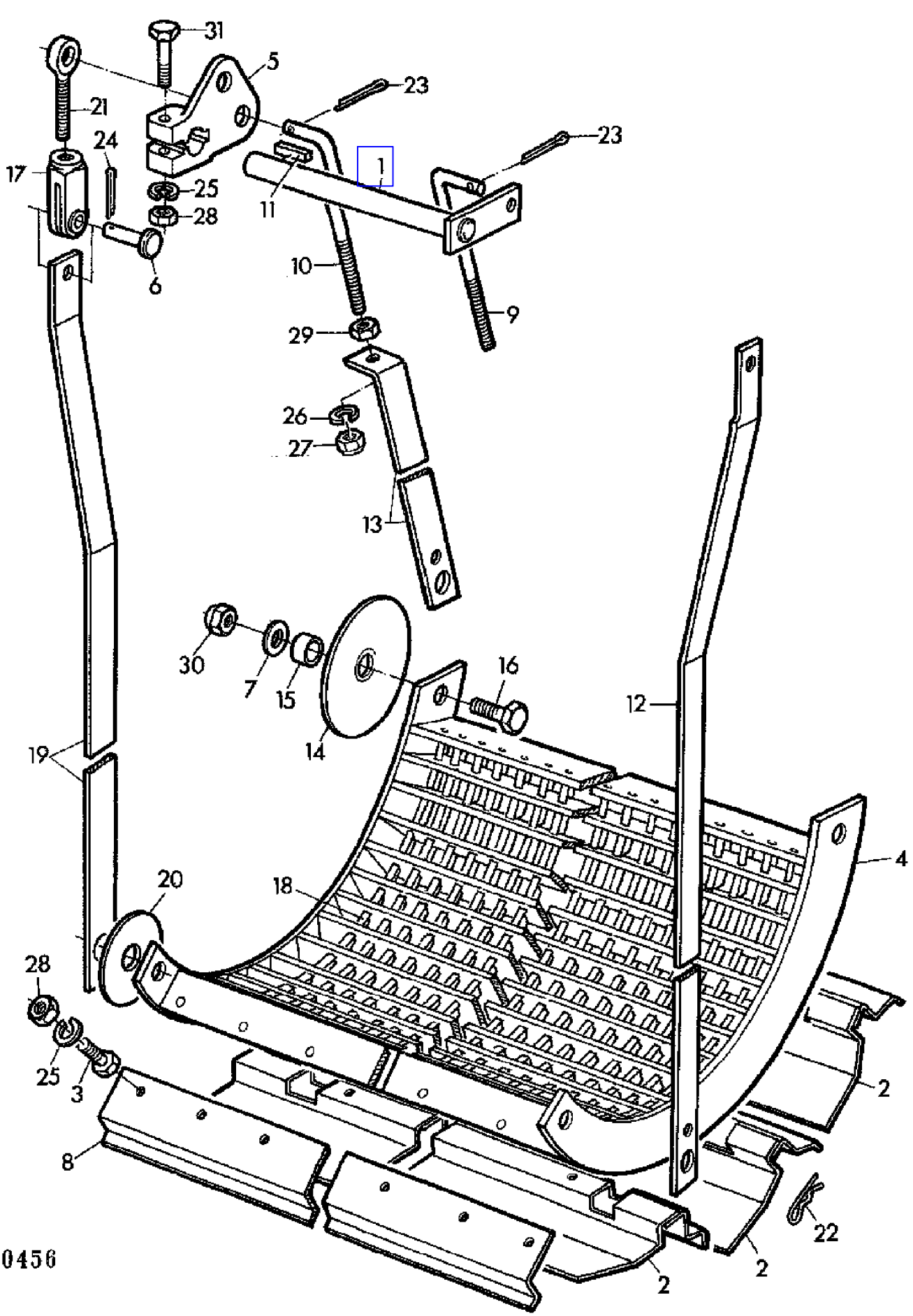

COPYRIGHT©1994 - 2008 DEERE & COMPANY Moline, Illinois All rights reserved

(4A15) CONCAVE
CONTRE-BATTEUR
DRESCHKORB
CONTROBATTITORE
CONCAVO
SLAGSKO

KEY	PART NO.	PART NAME	QTY	SERIAL NO.	955	REMARKS
1	AZ10055	SHAFT	1		X	
2	Z20088	SHEET	3		X	
3	19M7139	CAP SCREW	7		X	M8X20
4	AZ35456	CONCAVE	1		X	(A) (SUB FOR AZ17013)
	AZ34045	CONCAVE	1		X	(B) (SUB FOR AZ17516)
5	Z10047	ADJUSTER	1		X	RH
6	46M6880	PIN	1		X	11X35X27MM
7	24M7053	WASHER	4		X	17MM
8	Z28715	SHEET	1		X	
9	Z32645	PIN	1		X	REAR, LH
10	Z32644	PIN	1		X	REAR, RH
11	49M4108	SHAFT KEY	1		X	8X7X32MM
12	Z32647	BRACE	1		X	LH
13	Z32648	BRACE	2		X	REAR
14	Z20084	COVER	2		X	
15	Z33976	BUSHING	4		X	(SUB FOR Z32643)
16	19M7397	CAP SCREW	4		X	M16X50
17	Z24493	YOKE	1		X	12X48MM
18	Z25894	WIRE	AR		X	(A)
	Z20064	WIRE	AR		X	(B)
19	Z32646	BRACE	1		X	RH
20	Z27780	COVER	2		X	
21	Z29332	EYEBOLT	1		X	
22	L18955	QUICK LOCK PIN	AR		X	
23	11M7021	COTTER PIN	2		X	4X28MM
24	11M7019	COTTER PIN	1		X	4X20MM
25	12M7008	LOCK WASHER	8		X	8MM
26	12M7014	LOCK WASHER	3		X	12MM
27	14M7168	LOCK NUT	2		X	M12
28	14M7029	NUT	8		X	M8
29	14M7031	NUT	2		X	M12
30	14M7170	LOCK NUT	4		X	M16
31	19M7165	CAP SCREW	1		X	M8X55

(A) CONCAVE FOR MAIZE
CONTRE-BATTEUR MAIS
MAISDRESCHKORB
CONTROBATTITORE DA MAIS
CONCAVO PARA MAIZ
SLAGSKO FOR MAJS

(B) CONCAVE FOR GRAIN
CONTRE-BATTEUR CEREALES
GETREIDEDRESCHKORB
CONTROBATTITORE DA GRANO
CONCAVO PARA CEREALES
SLAGSKO FOR SAD

COPYRIGHT©1994 - 2008 DEERE & COMPANY Moline, Illinois All rights reserved

(3B06) CONCAVE AND HAND BRAKE LEVER
LEVIERS DE CONTRE-BATTEUR ET DE FREIN A MAIN
DRESCHKORBHEBEL UND HANDBREMSHEBEL
LEVE CONTROBATTITORE E FRENO A MANO
PALANCAS DEL FRENO DE MANO Y DE AJUSTE DEL CONCAVO
SPAKAR FOR SLAGSKO OCH HANDBROMS

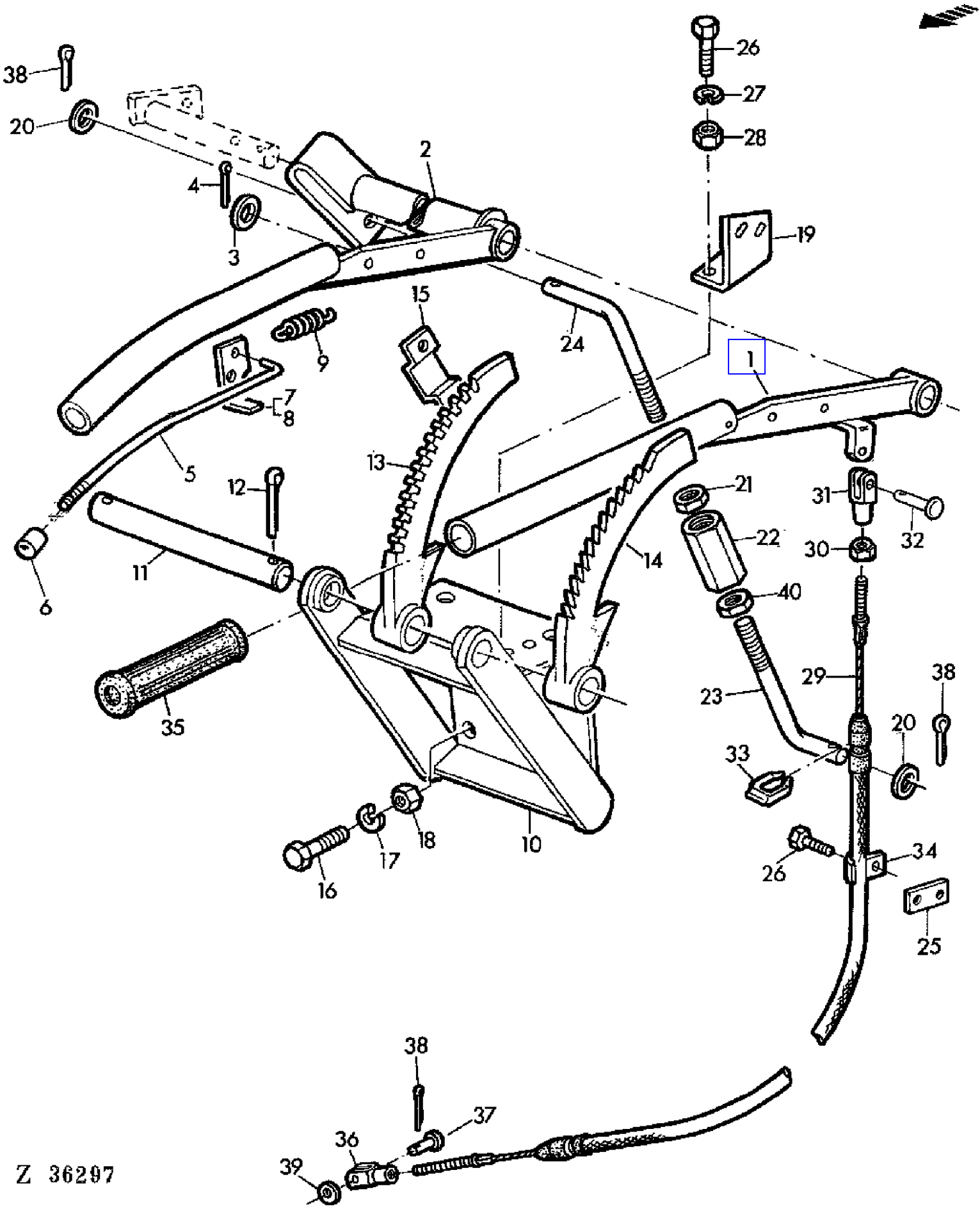

COPYRIGHT©1994 - 2008 DEERE & COMPANY Moline, Illinois All rights reserved

(3B06) CONCAVE AND HAND BRAKE LEVER
LEVIERS DE CONTRE-BATTEUR ET DE FREIN A MAIN
DRESCHKORBHEBEL UND HANDBREMSHEBEL
LEVE CONTROBATTITORE E FRENO A MANO
PALANCAS DEL FRENO DE MANO Y DE AJUSTE DEL CONCAVO
SPAKAR FOR SLAGSKO OCH HANDBROMS

KEY	PART NO.	PART NAME	QTY	SERIAL NO.	955	REMARKS
1	AZ18548	HANDBRAKE	1	- XXXX	X	(ORD AZ25483 W/ Z36579)
	AZ25483	HANDBRAKE LEVER	1	XXXX -	X	(A) (SUB FOR AZ18548)
2	AZ24622	LEVER	1		X	(B) (ORD AZ31089 W/ Z41473) (SUB FOR AZ18549)
	AZ31089	LEVER	1		X	(B) (SUB FOR AZ24622)
3	24M7040	WASHER	2		X	11MM
4	11M7014	COTTER PIN	2		X	3X25MM
5	Z21822	HOOK BOLT	2		X	(FOR AZ24622, AZ25483)
	Z41473	HOOK BOLT	1		X	(FOR AZ31089)
6	Z21823	KNOB	2		X	
7	Z21833	LATCH	1		X	(A)
8	Z21834	LATCH	1		X	(B)
9	Z21613	EXTENSION SPRING	2		X	
10	AZ29888	BRACKET	1		X	(SUB FOR AZ27537, Z10752)
11	Z29953	PIN	1		X	
12	11M7023	COTTER PIN	2		X	4X35MM
13	Z11323	SECTOR	1		X	(SUB FOR Z10248)
14	Z11324	SECTOR	1		X	(SUB FOR Z10674)
15	Z29945	BRACKET	1		X	
16	19M7163	CAP SCREW	3		X	M8X25
17	12M7008	LOCK WASHER	5		X	8MM
18	14M7029	NUT	5		X	M8
19	Z29946	PLATE	1	- XXXX	X	
	Z36579	HOLDER	1	XXXX -	X	
20	24M7043	WASHER	2		X	12MM
21	14M7031	NUT	2		X	M12
22	99M3833	TURNBUCKLE	1		X	
23	Z21905	HOOK BOLT	1		X	
24	Z21906	HOOK BOLT	1		X	
25	Z34870	STRAP	1		X	
26	19M7375	CAP SCREW	6		X	M6X18
27	12M7012	LOCK WASHER	7		X	6MM
28	14M7027	NUT	9		X	M6
29	AZ21465	PUSH PULL CABLE	1		X	
30	14M7152	NUT	1		X	M10
31	Z24492	YOKE	1		X	10X40MM
32	Z24484	PIN	1		X	
33	Z29162	CLAMP	2		X	
34	Z30685	CLAMP	1		X	
35	Z26791	HANDLE	1		X	

(A) HAND BRAKE
FREIN A MAIN
HANDBREMSE
FRENO A MANO
FRENO DE MANO
HANDBROMS

(B) CONCAVE
CONTRE-BATTEUR
DRESCHKORB
CONTROBATTITORE
CONCAVO
SLAGSKO

COPYRIGHT©1994 - 2008 DEERE & COMPANY Moline, Illinois All rights reserved

(3B06) CONCAVE AND HAND BRAKE LEVER
LEVIERS DE CONTRE-BATTEUR ET DE FREIN A MAIN
DRESCHKORBHEBEL UND HANDBREMSHEBEL
LEVE CONTROBATTITORE E FRENO A MANO
PALANCAS DEL FRENO DE MANO Y DE AJUSTE DEL CONCAVO
SPAKAR FOR SLAGSKO OCH HANDBROMS

KEY	PART NO.	PART NAME	QTY	SERIAL NO.	955	REMARKS
36	54M4421	YOKE	2		X	10X20MM
37	Z24487	PIN	1		X	
38	11M7019	COTTER PIN	4		X	4X20MM
39	24M7106	WASHER	1		X	10MM
40	14M7146	NUT	1		X	M12

(A) HAND BRAKE
FREIN A MAIN
HANDBREMSE
FRENO A MANO
FRENO DE MANO
HANDBROMS

(B) CONCAVE
CONTRE-BATTEUR
DRESCHKORB
CONTROBATTITORE
CONCAVO
SLAGSKO

COPYRIGHT©1994 - 2008 DEERE & COMPANY Moline, Illinois All rights reserved

(3D20) CONDENSOR-AIR CONDITIONED CAB
CONDENSEUR-CABINE CLIMATISEE
KONDENSATOR-KABINE MIT KLIMAANLAGE
CONDENSATORE-CABINA CONDIZIONATA
CONDENSADOR-CABINA CON AIRE ACONDICIONADO
KONDENSOR-HYTT MED LUFTKONDITIONERING

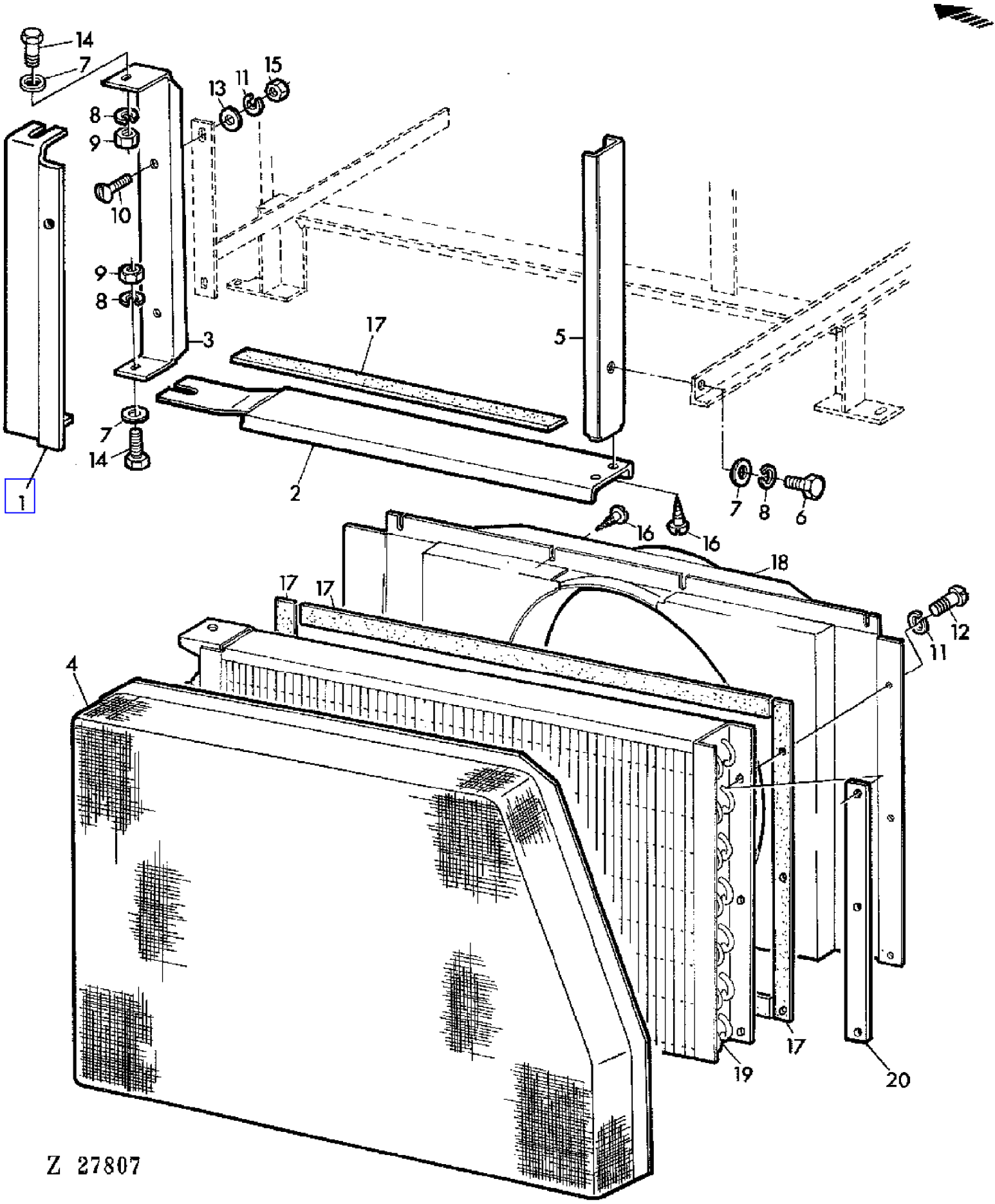

COPYRIGHT©1994 - 2008 DEERE & COMPANY Moline, Illinois All rights reserved

(3D20) CONDENSOR-AIR CONDITIONED CAB
CONDENSEUR-CABINE CLIMATISEE
KONDENSATOR-KABINE MIT KLIMAANLAGE
CONDENSATORE-CABINA CONDIZIONATA
CONDENSADOR-CABINA CON AIRE ACONDICIONADO
KONDENSOR-HYTT MED LUFTKONDITIONERING

KEY	PART NO.	PART NAME	QTY	SERIAL NO.	955	REMARKS
1	Z39061	GUIDE	1		X	
2	DA23762	HOLDER	1		X	
3	CA20523	HOLDER	1		X	
4	DA23753	SCREEN	1		X	
5	DA21220	HOLDER	1		X	
6	19M7162	CAP SCREW	AR		X	M8X16
7	24M7036	WASHER	AR		X	9MM
8	12M7008	LOCK WASHER	AR		X	8MM
9	14M7029	NUT	AR		X	M8
10	21M7085	SCREW	3		X	M6X20
11	12M7012	LOCK WASHER	AR		X	6MM
12	21M7031	SCREW	AR		X	M6X15
13	24M7088	WASHER	AR		X	6,6MM
14	19M7139	CAP SCREW	2		X	M8X20
15	14M7027	NUT	AR		X	M6
16	37M6835	SCREW	AR		X	5,5X13MM
17	CA20531	WEATHERSTRIP	AR		X	
18	DA22359	SHROUD	1		X	
19	AH87966	VAPOR CONDENSER	1		X	
20	CA22533	STRAP	1		X	

COPYRIGHT©1994 - 2008 DEERE & COMPANY Moline, Illinois All rights reserved

(3A25) CONTROL LEVER CONSOLE,RIGHT-HAND
CONSOLE DE COMMANDE DROITE
SCHALTKASTEN,RECHTS
SCATOLA COMANDO DESTRA
CAJA DE MANDOS DERECHA
HOEGER MANOEVERSPAKSHUS

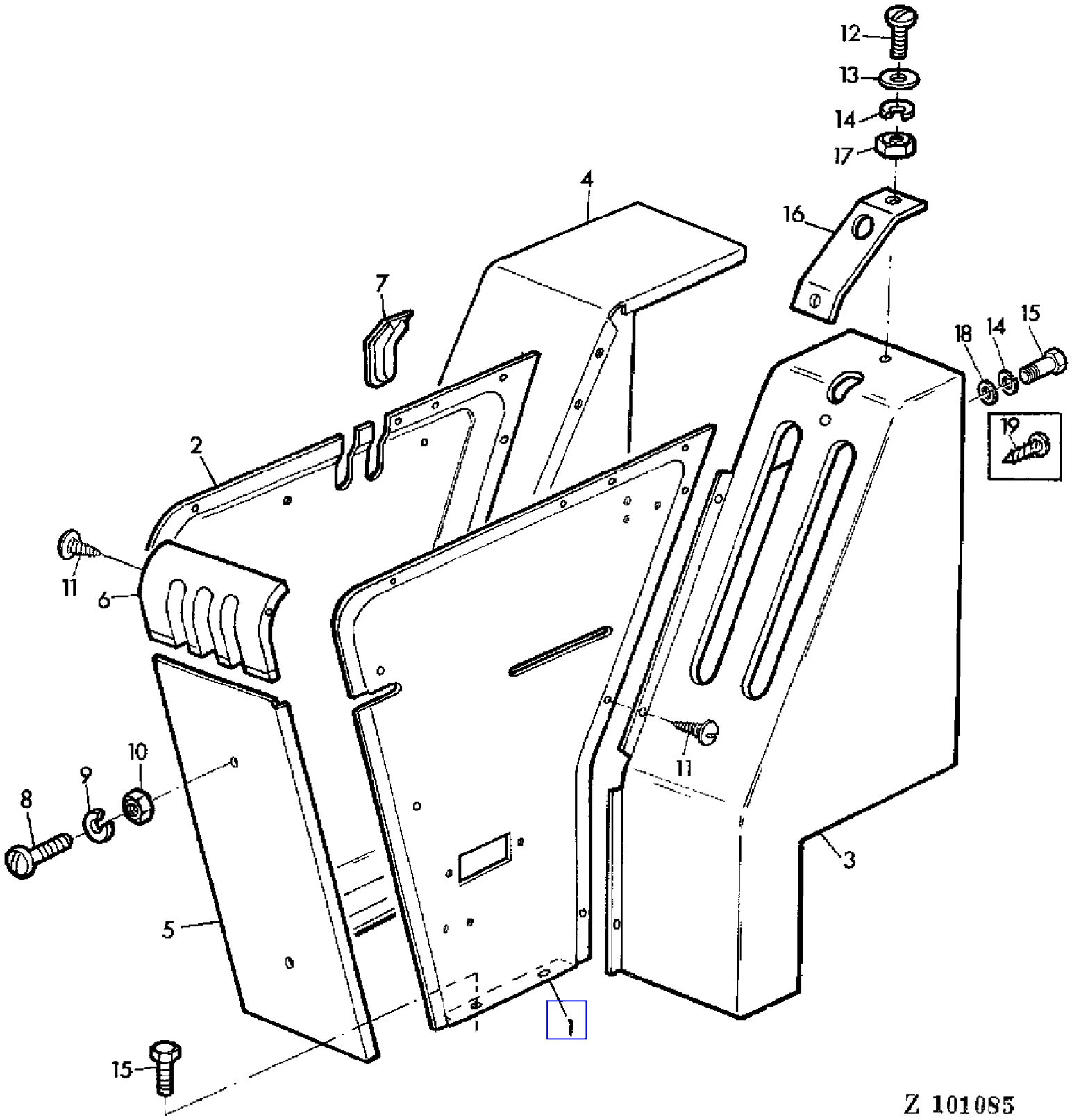

COPYRIGHT©1994 - 2008 DEERE & COMPANY Moline, Illinois All rights reserved

(3A25) CONTROL LEVER CONSOLE,RIGHT-HAND
CONSOLE DE COMMANDE DROITE
SCHALTKASTEN,RECHTS
SCATOLA COMANDO DESTRA
CAJA DE MANDOS DERECHA
HOEGER MANOEVERSPAKSHUS

KEY	PART NO.	PART NAME	QTY	SERIAL NO.	955	REMARKS
1	AZ23726	SHEET	1		X	
2	AZ18563	SHEET	1		X	
3	AZ22683	CONSOLE	1		X	(SUB FOR AZ21369)
4	AZ21368	SHEET	1		X	
5	Z29973	SHEET	1		X	
6	Z30041	COVER	1		X	
7	Z30299	COVER	2		X	
8	21M7081	SCREW	2		X	M8X25
9	12M7008	LOCK WASHER	2		X	8MM
10	14M7029	NUT	2		X	M8
11	37M7011	SCREW	12		X	4,8X9,5MM
12	21M7031	SCREW	3		X	M6X15
13	Z26250	WASHER	3		X	
14	12M7012	LOCK WASHER	3		X	6MM
15	19M6614	CAP SCREW	4		X	M6X12
16	Z29933	GUIDE	1		X	
17	14M7027	NUT	2		X	M6
18	24M7088	WASHER	AR		X	6,6MM
19	37M7029	SCREW	2		X	5,5X13MM

COPYRIGHT©1994 - 2008 DEERE & COMPANY Moline, Illinois All rights reserved

(3B04) CONTROL LEVERS,LEFT-HAND
LEVIERS DE COMMANDE GAUCHES
BEDIENUNGSHEBEL LINKS
LEVE COMANDO SINISTRI
PALANCAS DE MANDO A LA IZQUIERDA
VANSTER MANOVERSPAKAR

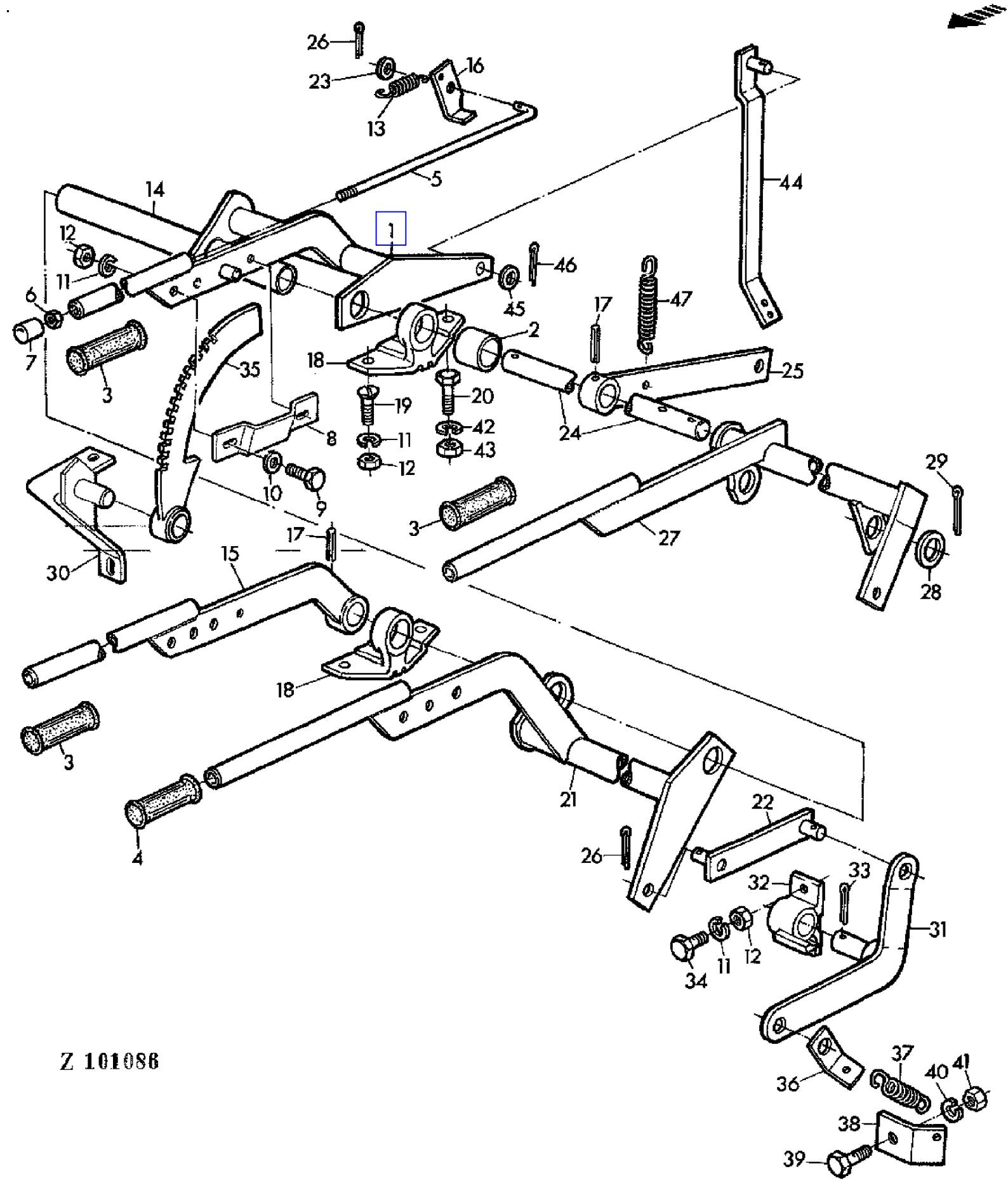

COPYRIGHT©1994 - 2008 DEERE & COMPANY Moline, Illinois All rights reserved

(3B04) CONTROL LEVERS,LEFT-HAND
LEVIERS DE COMMANDE GAUCHES
BEDIENUNGSHEBEL LINKS
LEVE COMANDO SINISTRI
PALANCAS DE MANDO A LA IZQUIERDA
VANSTER MANOVERSPAKAR

KEY	PART NO.	PART NAME	QTY	SERIAL NO.	955	REMARKS
1	AZ10981	LEVER	1		X	
2	Z21832	SPACER	1		X	
3	Z26791	HANDLE	3		X	(A)
4	Z30976	HANDLE	1		X	(B)
5	Z21824	HOOK BOLT	1		X	
6	14M7027	NUT	1		X	M6
7	Z21823	KNOB	1		X	
8	Z36022	RETAINER	1		X	(SUB FOR Z10205)
9	19M7163	CAP SCREW	2		X	M8X25
10	24M7036	WASHER	2		X	9MM
11	12M7008	LOCK WASHER	6		X	8MM
12	14M7029	NUT	6		X	M8
13	Z21613	EXTENSION SPRING	2		X	
14	Z21827	PIPE	1		X	
15	AZ10974	LEVER	1		X	
16	Z21834	LATCH	1		X	
17	34M7047	SPRING PIN	2		X	8X40MM
18	Z10207	BEARING	2		X	
19	21M7125	SCREW	2		X	M8X25
20	19M7167	CAP SCREW	1		X	M10X25
21	AZ10977	LEVER	1		X	
22	AZ10984	STRAP	1		X	
23	24M7040	WASHER	1		X	11MM
24	Z21829	SHAFT	1		X	
25	AZ10975	LEVER	1		X	
26	11M7014	COTTER PIN	3		X	3X25MM
27	AZ10979	LEVER	1		X	
28	Z24651	WASHER	3		X	
29	11M7038	COTTER PIN	1		X	6X45MM
30	AZ30656	BRACKET	1		X	(SUB FOR AZ28600, Z10203)
31	Z10202	LEVER	1		X	
32	Z10201	BEARING	1		X	
33	11M7024	COTTER PIN	1		X	4X40MM
34	19M7288	CAP SCREW	2		X	M8X30
35	Z11323	SECTOR	1		X	(SUB FOR Z10248)
36	Z22572	HOLDER	1		X	
37	E10073	SPRING	1		X	
38	Z22573	STRAP	1		X	
39	19M7158	CAP SCREW	1		X	M12X45

(A) BLACK
NOIR
SCHWARZ
NERO
NEGRO
SVART

(B) YELLOW
JAUNE
GELB
GIALLO
AMARILLO
GUL

COPYRIGHT©1994 - 2008 DEERE & COMPANY Moline, Illinois All rights reserved

(3B04) CONTROL LEVERS,LEFT-HAND
LEVIERS DE COMMANDE GAUCHES
BEDIENUNGSHEBEL LINKS
LEVE COMANDO SINISTRI
PALANCAS DE MANDO A LA IZQUIERDA
VANSTER MANOVERSPAKAR

KEY	PART NO.	PART NAME	QTY	SERIAL NO.	955	REMARKS
40	12M7014	LOCK WASHER	1		X	12MM
41	14M7031	NUT	1		X	M12
42	12M7013	LOCK WASHER	1		X	10MM
43	14M7140	NUT	1		X	M10
44	AZ13285	LEVER	1		X	
45	24M7038	WASHER	1		X	14MM
46	11M7013	COTTER PIN	1		X	3X20MM
47	Z22925	EXTENSION SPRING	1		X	

(A) BLACK
NOIR
SCHWARZ
NERO
NEGRO
SVART

(B) YELLOW
JAUNE
GELB
GIALLO
AMARILLO
GUL

COPYRIGHT©1994 - 2008 DEERE & COMPANY Moline, Illinois All rights reserved

(3E12) CONTROL UNIT-AIR CONDITIONING SYSTEM
UNITE DE COMMANDE-CLIMATISATION
STEUERUNGSEINHEIT-KLIMAANLAGE
CENTRO DI COMANDO,IMPIANTO DI ARIA CONDIZIONATA
CENTRO DE MANDO,SISTEMA DE ACONDICIONAMIENTO DE AIRE
KONTROLLADA FOR LUFTKONDITIONERING

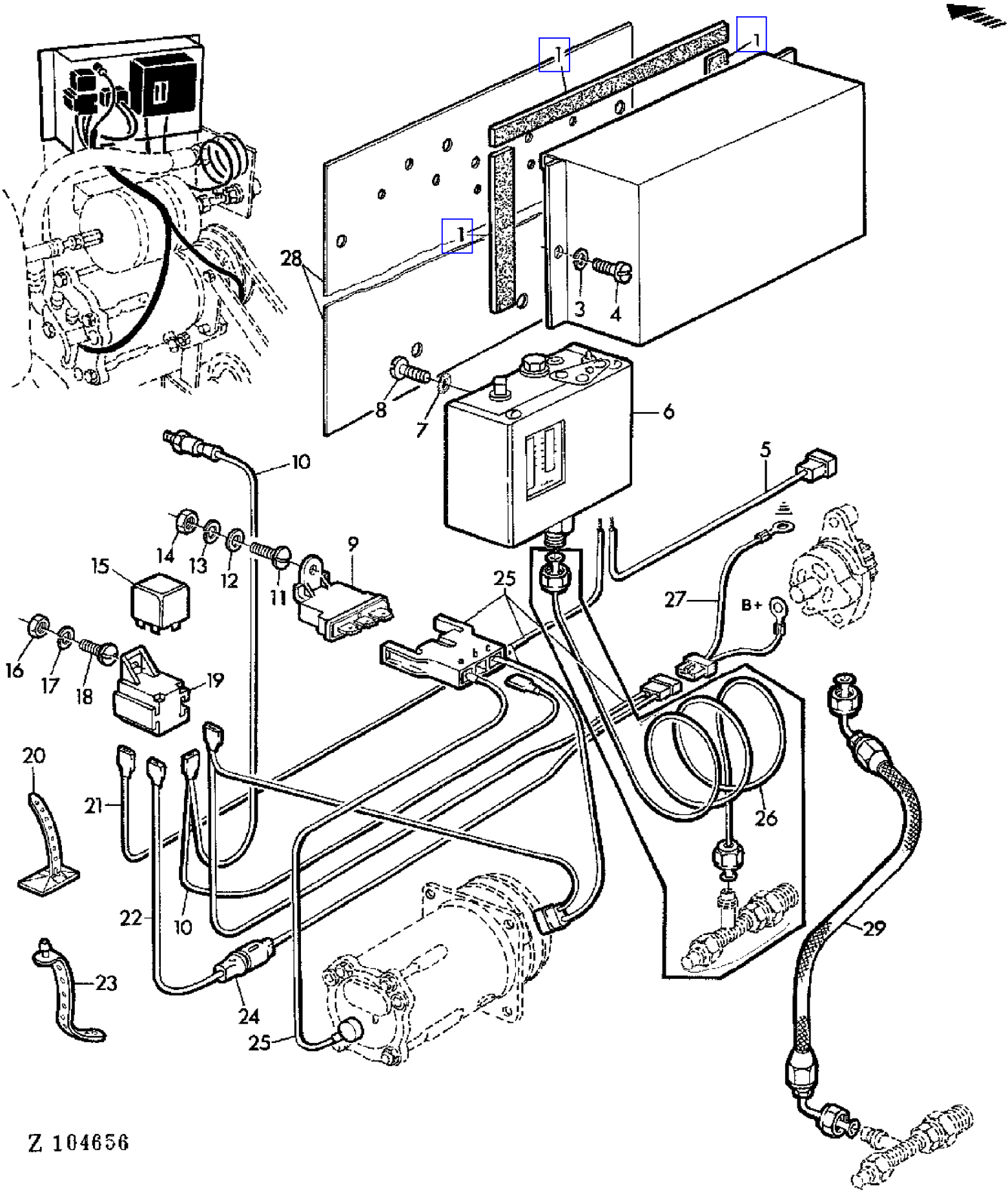

COPYRIGHT©1994 - 2008 DEERE & COMPANY Moline, Illinois All rights reserved

(3E12) CONTROL UNIT-AIR CONDITIONING SYSTEM
UNITE DE COMMANDE-CLIMATISATION
STEUERUNGSEINHEIT-KLIMAANLAGE
CENTRO DI COMANDO,IMPIANTO DI ARIA CONDIZIONATA
CENTRO DE MANDO,SISTEMA DE ACONDICIONAMIENTO DE AIRE
KONTROLLADA FOR LUFTKONDITIONERING

KEY	PART NO.	PART NAME	QTY	SERIAL NO.	955	REMARKS
1	CA20531	WEATHERSTRIP	1		X	LGTH = 3300 MM 20X4MM
2	AZ31712	SHIELD	1		X	
3	12M7012	LOCK WASHER	2		X	6MM
4	21M7088	SCREW	2		X	M6X12
5	AZ31716	POWER CORD	1		X	
6	AZ31713	ACCUMULATOR	1		X	
7	12M7045	LOCK WASHER	2		X	4MM
8	21M7137	SCREW	2		X	M4X10
9	AR77344	FUSE	1		X	
10	AZ29061	WIRING HARNESS	1		X	
11	21M7033	SCREW	1		X	M4X16
12	24M7117	WASHER	1		X	4,3MM
13	12M7031	LOCK WASHER	1		X	4MM
14	14M7139	NUT	1		X	M4
15	AZ26996	RELAY	1		X	
16	14M7028	NUT	1		X	M5
17	12M7011	LOCK WASHER	1		X	5MM
18	21M7158	SCREW	1		X	M5X12
19	AZ26995	RECEPTACLE CONNECTOR BODY	1		X	
20	Z36647	CLAMP	AR		X	
21	AZ31717	POWER CORD	1		X	
22	AZ29063	POWER CORD	1		X	
23	Z31020	CLAMP	1		X	
24	AZ29064	FUSE HOLDER	1		X	
25	AZ29206	WIRING HARNESS	1		X	
26	AZ31715	TUBE	1		X	(ORD AZ33951)
27	AZ29059	WIRING HARNESS	1		X	
28	AZ31876	SHEET	1		X	
29	AZ33951	HYDRAULIC HOSE	1		X	(SUB FOR AZ31715)

COPYRIGHT©1994 - 2008 DEERE & COMPANY Moline, Illinois All rights reserved

(1B19) COOLANT MANIFOLD/THERMOSTAT
PIPE D'EAU/THERMOSTAT
KUEHLWASSERKRUEMMER/THERMOSTAT
COLLETTORE REFRIGERANTE/TERMOSTATO
COLECTOR DEL AGUA DE REFRIGERACION/TERMOSTATO
KYLVATTENROER/TERMOSTAT

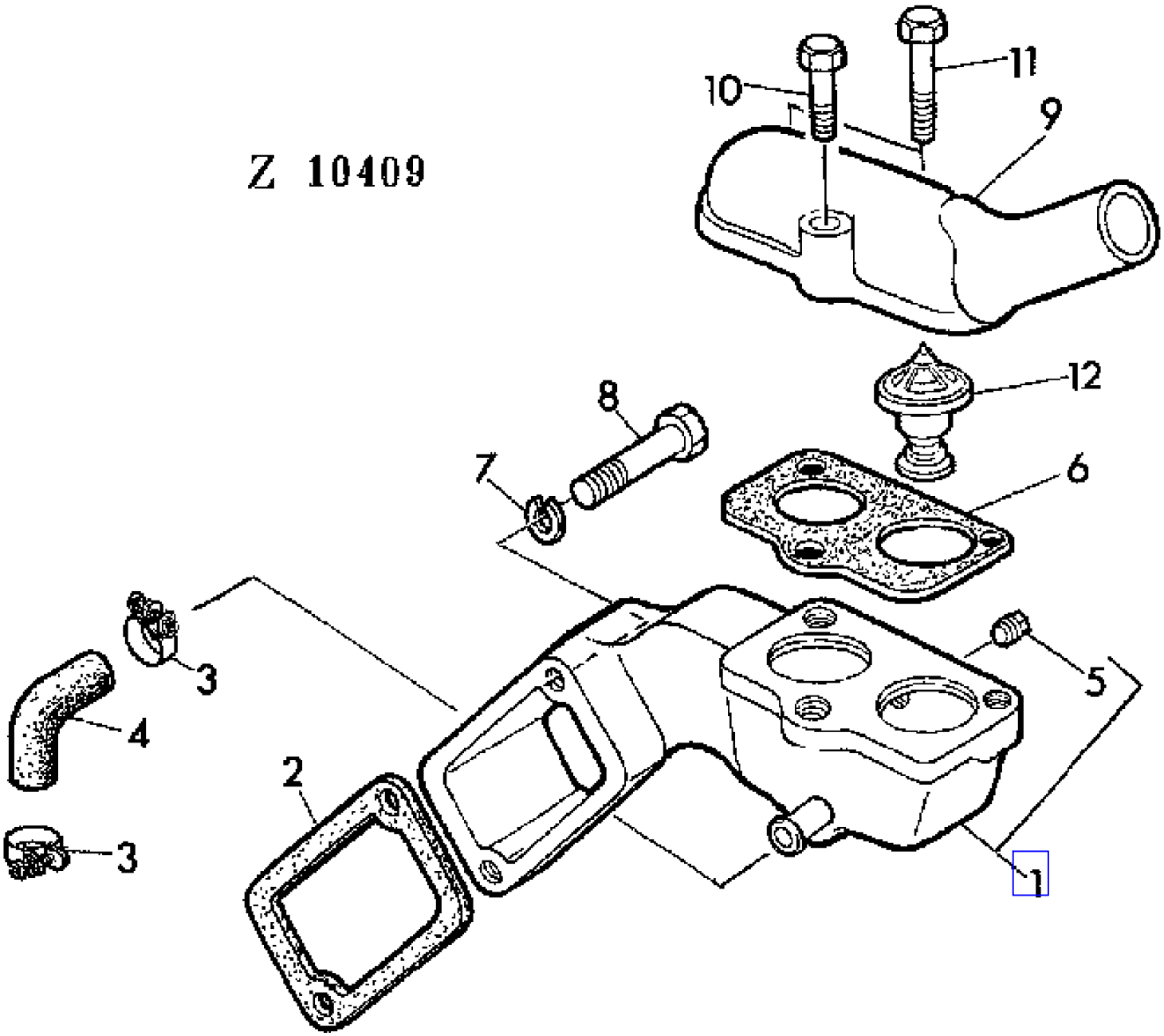

COPYRIGHT©1994 - 2008 DEERE & COMPANY Moline, Illinois All rights reserved

(1B19) COOLANT MANIFOLD/THERMOSTAT
PIPE D'EAU/THERMOSTAT
KUEHLWASSERKRUEMMER/THERMOSTAT
COLLETTORE REFRIGERANTE/TERMOSTATO
COLECTOR DEL AGUA DE REFRIGERACION/TERMOSTATO
KYLVATTENROER/TERMOSTAT

KEY	PART NO.	PART NAME	QTY	ENGINE SERIAL NO.		955	REMARKS
1	AR76291	COOLANT MANIFOLD	1	235170	-	X	ASSY, INCL KEY 5
2	R54641	GASKET	1	235170	-	X	
3	AR89478	CLAMP	2	235170	-	X	(SUB FOR AT11384)
4	R62156	HOSE	1	235170	-	X	
5	15H584	PIPE PLUG	1	235170	-	X	1/2"
6	R54638	GASKET	1	235170	-	X	
7	12H304	LOCK WASHER	2	235170	-	X	3/8"
8	19H1912	CAP SCREW	2	235170	-	X	3/8"X3-1/2"
9	R55968	CASE	1	235170	-	X	
10	19H1801	CAP SCREW	1	235170	-	X	3/8"X2"
11	19H1732	CAP SCREW	2	235170	-	X	3/8"X1-1/4"
12	AR48675	THERMOSTAT	2	235170	-	X	82C (180F)

COPYRIGHT©1994 - 2008 DEERE & COMPANY Moline, Illinois All rights reserved

(1B20) COOLANT MANIFOLD/THERMOSTAT
PIPE D'EAU/THERMOSTAT
KUEHLWASSERKRUEMMER/THERMOSTAT
COLLETTORE REFRIGERANTE/TERMOSTATO
COLECTOR DEL AGUA DE REFRIGERACION/TERMOSTATO
KYLVATTENROER/TERMOSTAT

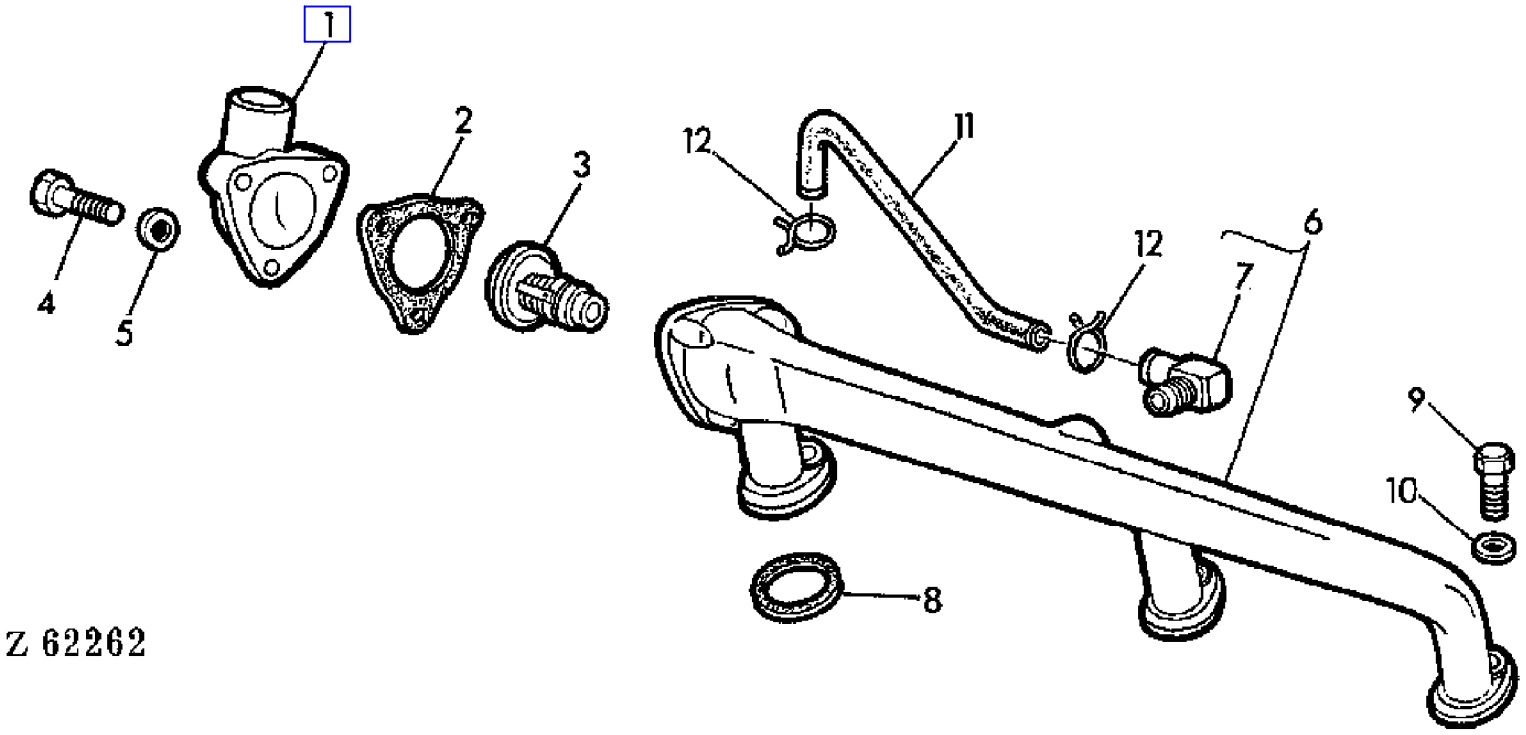

COPYRIGHT©1994 - 2008 DEERE & COMPANY Moline, Illinois All rights reserved

(1B20) COOLANT MANIFOLD/THERMOSTAT
PIPE D'EAU/THERMOSTAT
KUEHLWASSERKRUEMMER/THERMOSTAT
COLLETTORE REFRIGERANTE/TERMOSTATO
COLECTOR DEL AGUA DE REFRIGERACION/TERMOSTATO
KYLVATTENROER/TERMOSTAT

KEY	PART NO.	PART NAME	QTY	ENGINE SERIAL NO.	955	REMARKS
1	T24934	COVER	1	- 235169	X	
2	T24932	GASKET	1	- 235169	X	
3	AR77411	THERMOSTAT	1	- 235169	X	90C (195F) (SUB FOR AR70601)
4	19H1801	CAP SCREW	3	- 235169	X	3/8"X2"
5	24H1304	WASHER	3	- 235169	X	13/32"X23/32"X.120"
6	AT23071	COOLANT MANIFOLD	1	- 235169	X	ASSY, INCL KEY 7
7	AR50710	HOSE FITTING	1	- 235169	X	
8	T23002	GASKET	3	- 235169	X	
9	R53219	CAP SCREW	3	- 235169	X	1/2"X5"
10	T20168	WASHER	3	- 235169	X	
11	T25471	HOSE	1	- 235169	X	
12	T29130	CLAMP	2	- 235169	X	

COPYRIGHT©1994 - 2008 DEERE & COMPANY Moline, Illinois All rights reserved

(3G12) CORN HEAD DRIVE SHAFT/HYDROST.REEL DRIVE
ARBRE D'ENTRAIN.DU CUEILLEUR/COMM.HYDROST.DU RABATTEUR
ANTRIEBSWELLE FUER MAISPFLUECKVORSATZ/HYDROST.HASPELANTRIEB
ALBERO COMANDO PER TESTATA SPANNOCCH./COMANDO IDROST.ASPO
EJE DE ACCION.PARA CABEZAL DE MAIZ/TRANSM.MOLINETE HIDROST.
DRIVAXEL FOR MAJSAGGREGAT/HYDROSTAT.HASPELDRIVNING

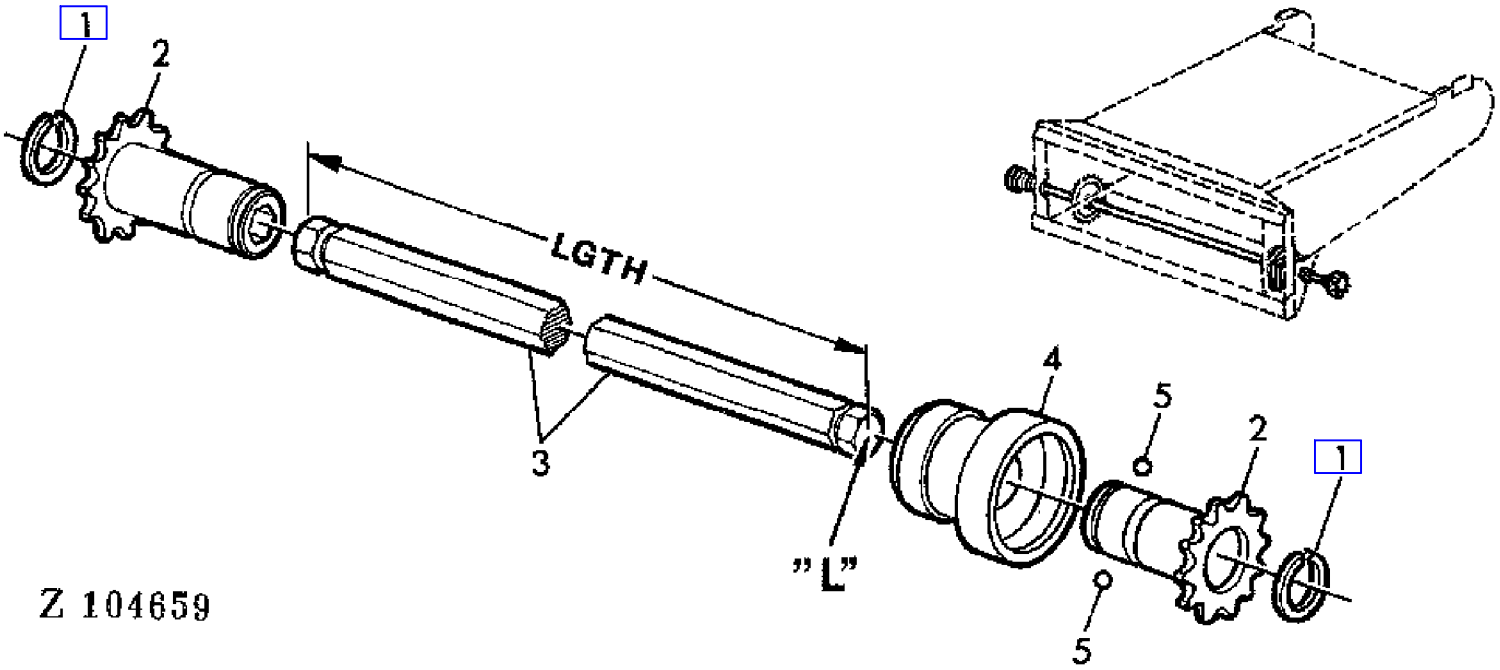

COPYRIGHT©1994 - 2008 DEERE & COMPANY Moline, Illinois All rights reserved

(3G12) CORN HEAD DRIVE SHAFT/HYDROST.REEL DRIVE
ARBRE D'ENTRAIN.DU CUEILLEUR/COMM.HYDROST.DU RABATTEUR
ANTRIEBSWELLE FUER MAISPFLUECKVORSATZ/HYDROST.HASPELANTRIEB
ALBERO COMANDO PER TESTATA SPANNOCCH./COMANDO IDROST.ASPO
EJE DE ACCION.PARA CABEZAL DE MAIZ/TRANSM.MOLINETE HIDROST.
DRIVAXEL FOR MAJSAGGREGAT/HYDROSTAT.HASPELDRIVNING

KEY	PART NO.	PART NAME	QTY	SERIAL NO.	955	REMARKS
1	H80926	SNAP RING	2		X	AR
2	AZ33602	CHAIN SPROCKET	2		X	AR
3	Z43552	TOOLBAR	1		X	LGTH = 2330 MM 91.73", AR
4	AH89038	QUICK COUPLER	2		X	AR
5	N104243	BALL	3		X	AR

COPYRIGHT©1994 - 2008 DEERE & COMPANY Moline, Illinois All rights reserved

(1C10) COUNTERSHAFT FOR ROTARY RADIATOR SCREEN
RENVOI DU TAMIS ROTATIF
VORGELEGE FUER ROTIERENDES KUEHLERSIEB
CONTROALBERO PER SCHERMO ROTATIVO DEL RADIATORE
EJE INTERMEDIO PARA LA REJILLA ROTATORIA DEL RADIADOR
MELLANAXEL FOER ROTERANDE KYLARSKYDD

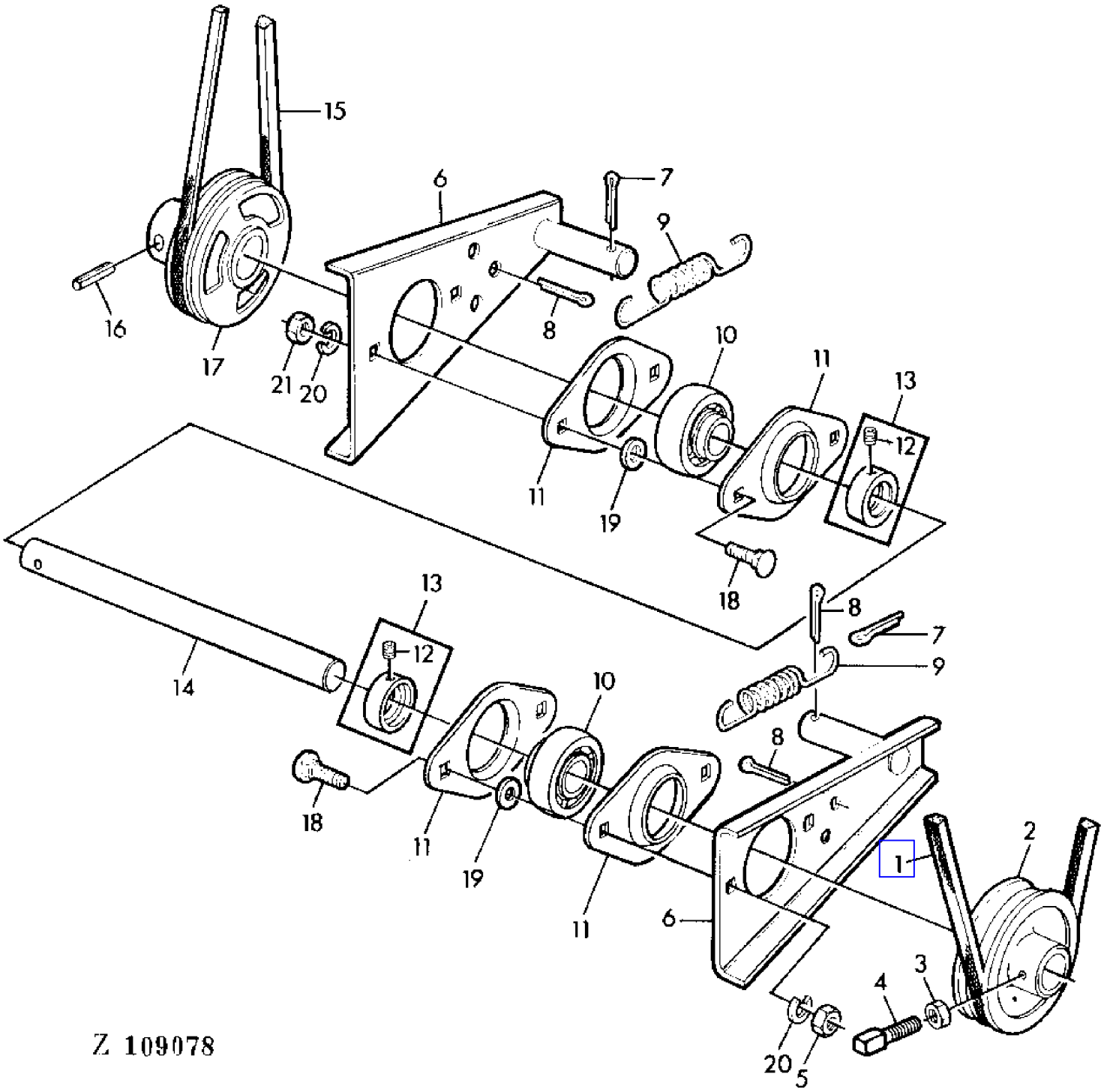

COPYRIGHT©1994 - 2008 DEERE & COMPANY Moline, Illinois All rights reserved

(1C10) COUNTERSHAFT FOR ROTARY RADIATOR SCREEN
RENVOI DU TAMIS ROTATIF
VORGELEGE FUER ROTIERENDES KUEHLERSIEB
CONTROALBERO PER SCHERMO ROTATIVO DEL RADIATORE
EJE INTERMEDIO PARA LA REJILLA ROTATORIA DEL RADIADOR
MELLANAXEL FOER ROTERANDE KYLARSKYDD

KEY	PART NO.	PART NAME	QTY	SERIAL NO.	955	REMARKS
1	Z31283	BELT	1		X	
2	Z10864	PULLEY	1		X	
3	14M7029	NUT	1		X	M8
4	Z32434	SET SCREW	1		X	8X20MM
5	14M7027	NUT	4		X	M6
6	AZ23070	SUPPORT	2		X	
7	11M7013	COTTER PIN	2		X	3,2X20MM
8	11M7035	COTTER PIN	2		X	6,3X25MM
9	Z21232	EXTENSION SPRING	2		X	
10	AZ19970	BALL BEARING	2		X	
11	Z31372	PRESSED FLANGED HOUSING	4		X	
12	22M7079	SET SCREW	2		X	6X6MM, KIT
13	AZ20030	ECCENTRIC LOCKING COLLAR	2		X	INCL KEY 12
14	Z32875	SHAFT	1		X	
15	Z32190	BELT	1		X	
16	34M7033	SPRING PIN	1		X	5X30MM
17	Z10818	PULLEY	1		X	
18	03M7092	BOLT	4		X	M6X16
19	24M7054	WASHER	4		X	6,4MM
20	12M7012	LOCK WASHER	4		X	6MM

COPYRIGHT©1994 - 2008 DEERE & COMPANY Moline, Illinois All rights reserved

(2E12) COVER PLATE AND BRACKET
COUVERCLE ET RENFORTS
ABDECKBLECH UND VERSTREBUNG
COPERCHIO E SUPPORTI
CHAPA DE CUBRIMIENTO Y RIOSTRAS
TAECKPLATTA OCH HALLARE

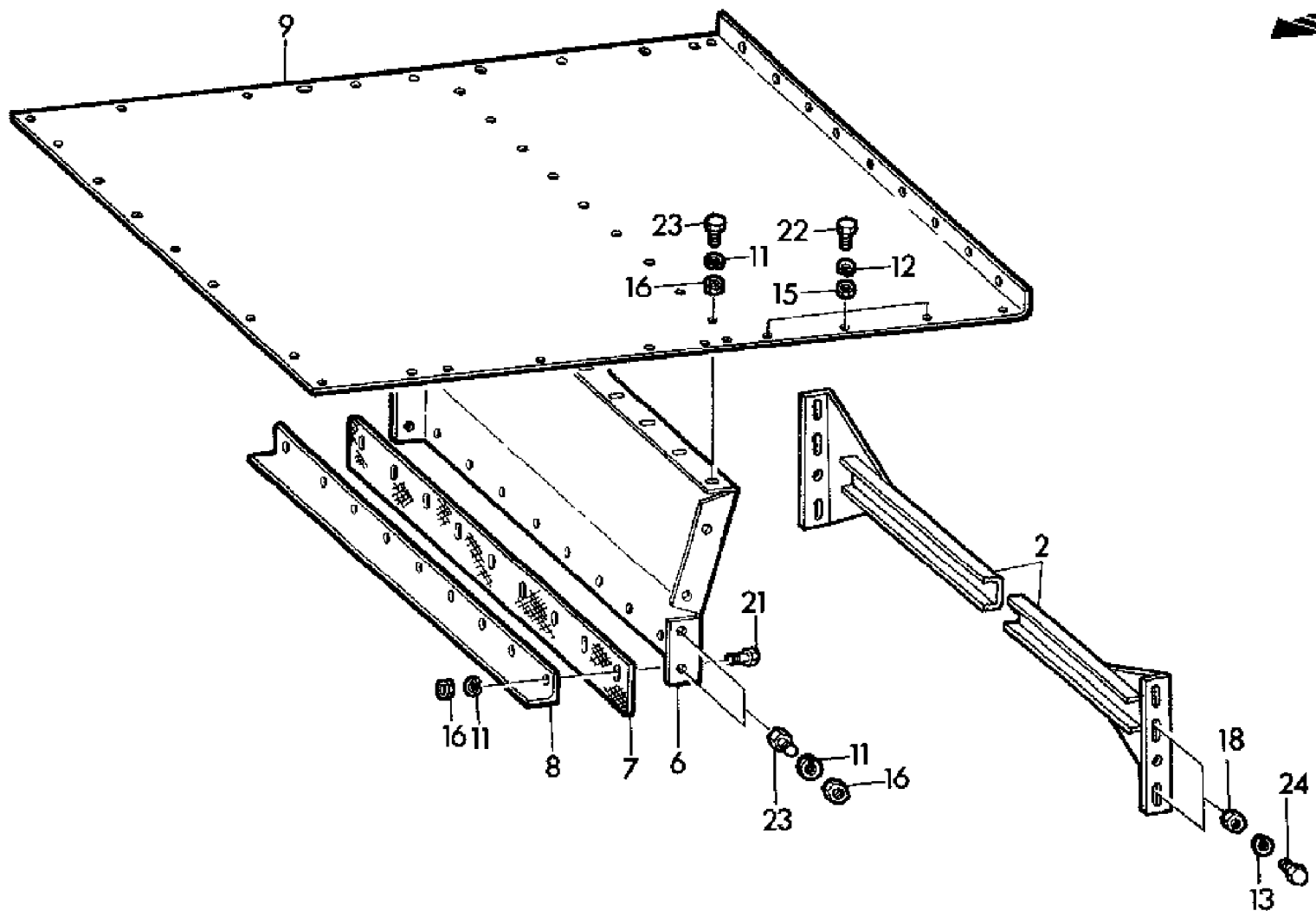

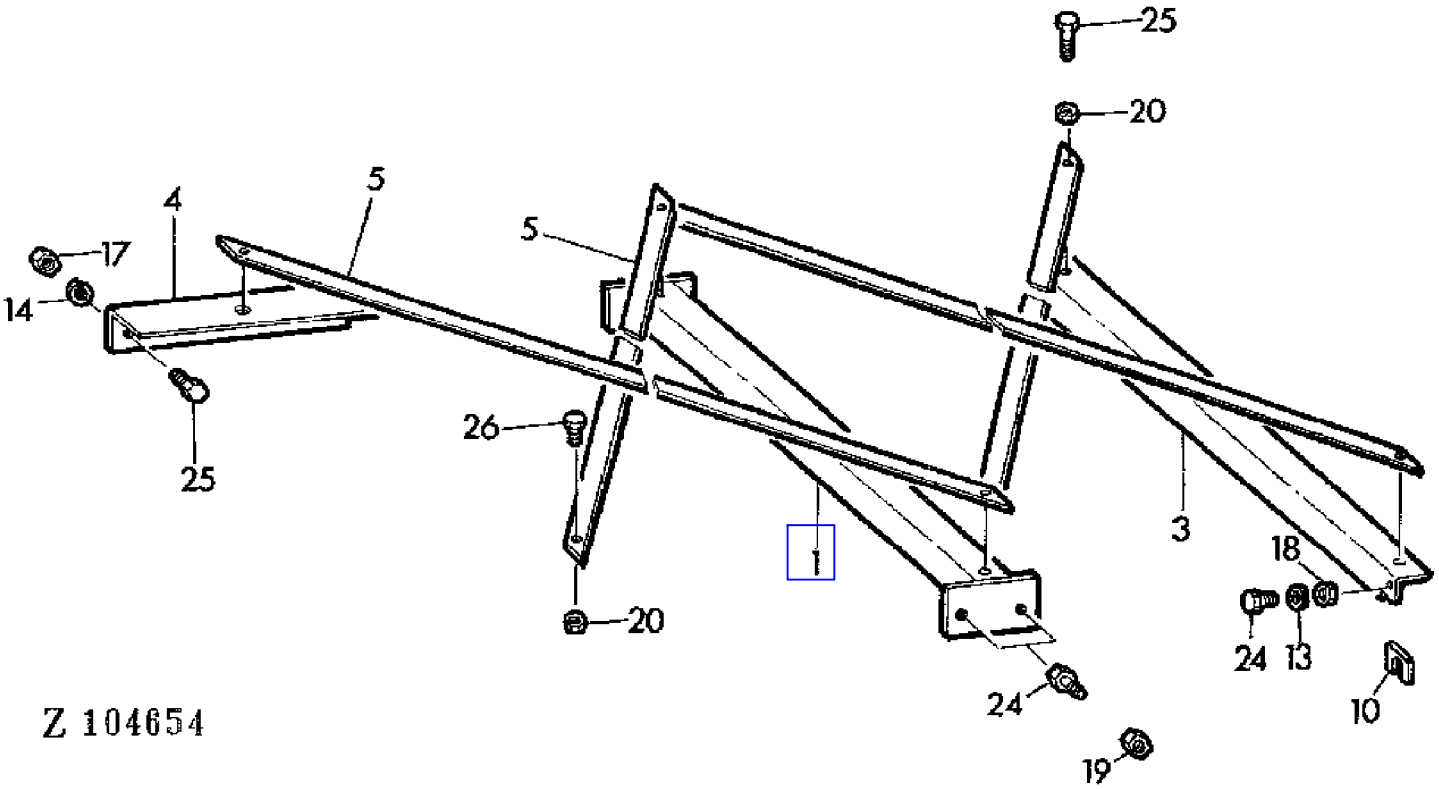

COPYRIGHT©1994 - 2008 DEERE & COMPANY Moline, Illinois All rights reserved

(2E12) COVER PLATE AND BRACKET
COUVERCLE ET RENFORTS
ABDECKBLECH UND VERSTREBUNG
COPERCHIO E SUPPORTI
CHAPA DE CUBRIMIENTO Y RIOSTRAS
TAECKPLATTA OCH HALLARE

KEY	PART NO.	PART NAME	QTY	SERIAL NO.	955	REMARKS
1	AZ21462	BRACE	1		X	(ORD AZ34225)
	AZ34225	BRACE	1		X	
2	AZ23227	CROSSBAR	1		X	(SUB FOR AZ16073)
3	Z20653	BRACE	1		X	
4	Z20655	ANGLE	2		X	
5	Z20657	BRACE	4		X	
6	Z20661	DEFLECTOR	1		X	
7	Z20663	GASKET	1		X	
8	Z20665	ANGLE	1		X	
9	Z20667	SHEET	1		X	
10	Z30298	SHIM	AR		X	
11	12M7008	LOCK WASHER	22		X	8MM
12	12M7012	LOCK WASHER	6		X	6MM
13	12M7013	LOCK WASHER	6		X	10MM
14	12M7014	LOCK WASHER	8		X	12MM
15	14M7027	NUT	AR		X	M6
16	14M7029	NUT	22		X	M8
17	14M7031	NUT	8		X	M12
18	14M7140	NUT	6		X	M10
19	14M7167	LOCK NUT	6		X	M10
20	14M7168	LOCK NUT	2		X	M12
21	19M7139	CAP SCREW	5		X	M8X20
22	19M7159	CAP SCREW	6		X	M6X15
23	19M7162	CAP SCREW	17		X	M8X15
24	19M7167	CAP SCREW	14		X	M10X25
25	19M7171	CAP SCREW	14		X	M12X35
26	19M7268	CAP SCREW	2		X	M12X25

COPYRIGHT©1994 - 2008 DEERE & COMPANY Moline, Illinois All rights reserved

(4F04) COVER PLATES FOR GRAIN TANK EXTENSION
HABILLAGE DE REHAUSSE DE TREMIE
VERKLEIDUNGSBLECHE KORNTANKAUFSATZ
COPERCHIO DELLA ESTENSIONE GRANDE SERBATOIO GRANO
CHAPAS DE REVESTIMIENTO DE LA EXTENSION DEL TANQUE DE GRANO
LOCK FOER SPANNMALSTANKENS FOERHOEJNING

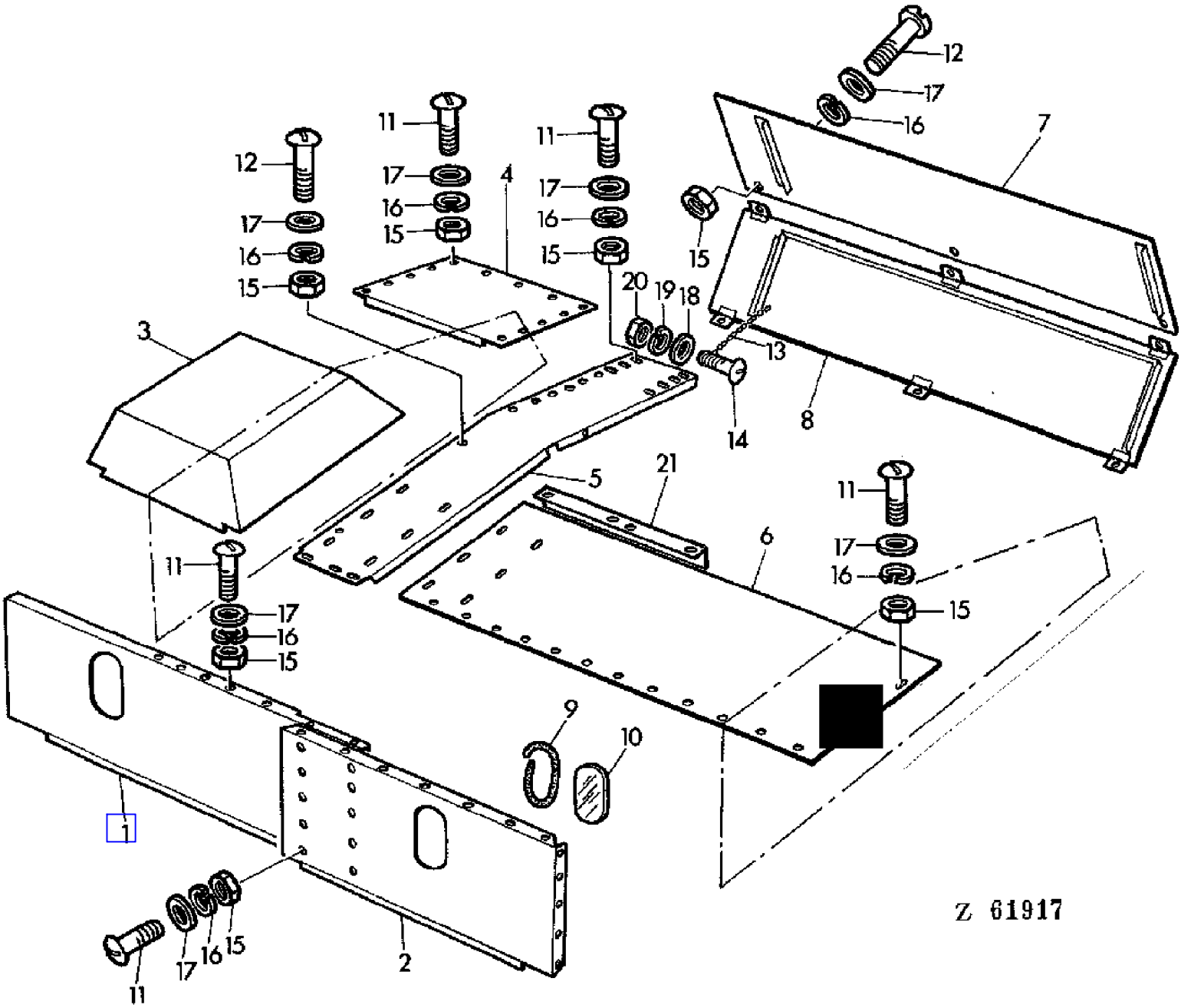

COPYRIGHT©1994 - 2008 DEERE & COMPANY Moline, Illinois All rights reserved

(4F04) COVER PLATES FOR GRAIN TANK EXTENSION
HABILLAGE DE REHAUSSE DE TREMIE
VERKLEIDUNGSBLECHE KORNTANKAUFSATZ
COPERCHIO DELLA ESTENSIONE GRANDE SERBATOIO GRANO
CHAPAS DE REVESTIMIENTO DE LA EXTENSION DEL TANQUE DE GRANO
LOCK FOER SPANNMALSTANKENS FOERHOEJNING

KEY	PART NO.	PART NAME	QTY	SERIAL NO.	955	REMARKS
1	AZ17186	SHEET	1		X	FRONT, RH
2	AZ17189	SHEET	1		X	FRONT, LH
3	AZ17200	GUARD	1		X	
4	Z28542	SHEET	1		X	
5	Z28550	COVER	1		X	
6	Z28548	COVER	1		X	
7	AZ17191	COVER	1		X	
8	AZ17195	COVER	1		X	
9	Z23294	GASKET	2		X	
10	Z23295	WINDOWPANE	2		X	
11	21M7031	SCREW	58		X	M6X15
12	21M7085	SCREW	8		X	M6X20
13	AZ17304	LINK CHAIN	2		X	L = 10
14	21M7178	BOLT	4		X	M5X12
15	14M7027	NUT	66		X	M6
16	12M7012	LOCK WASHER	66		X	6MM
17	24M7088	WASHER	66		X	6,6MM
18	24M7087	WASHER	4		X	5,5MM
19	12M7011	LOCK WASHER	4		X	5MM
20	14M7028	NUT	4		X	M5
21	Z33576	ANGLE	1		X	

COPYRIGHT©1994 - 2008 DEERE & COMPANY Moline, Illinois All rights reserved

(1B03) CRANKSHAFT FOR 0.254MM(0.010 IN.)UNDERSIZE BEARINGS
VILEBREQUIN POUR PALIERS COTE REPAR,0.254MM(0.010IN.)
KURBELWELLE MIT 0,254MM(0,010IN.)KLEINEREM LAGERDURCHMESSER
ALBERO A GOMITO CON BRONZINE MINORATI DI 0,254MM(0.01 IN.)
CIGUENAL CON DIAMETRO,DE COJINETES REDUCIDO 0,254MM /0,010IN
VEVAXEL MED UNDERDIMENS. RAMLAGER(0,254MM-0,01 IN MINDRE)

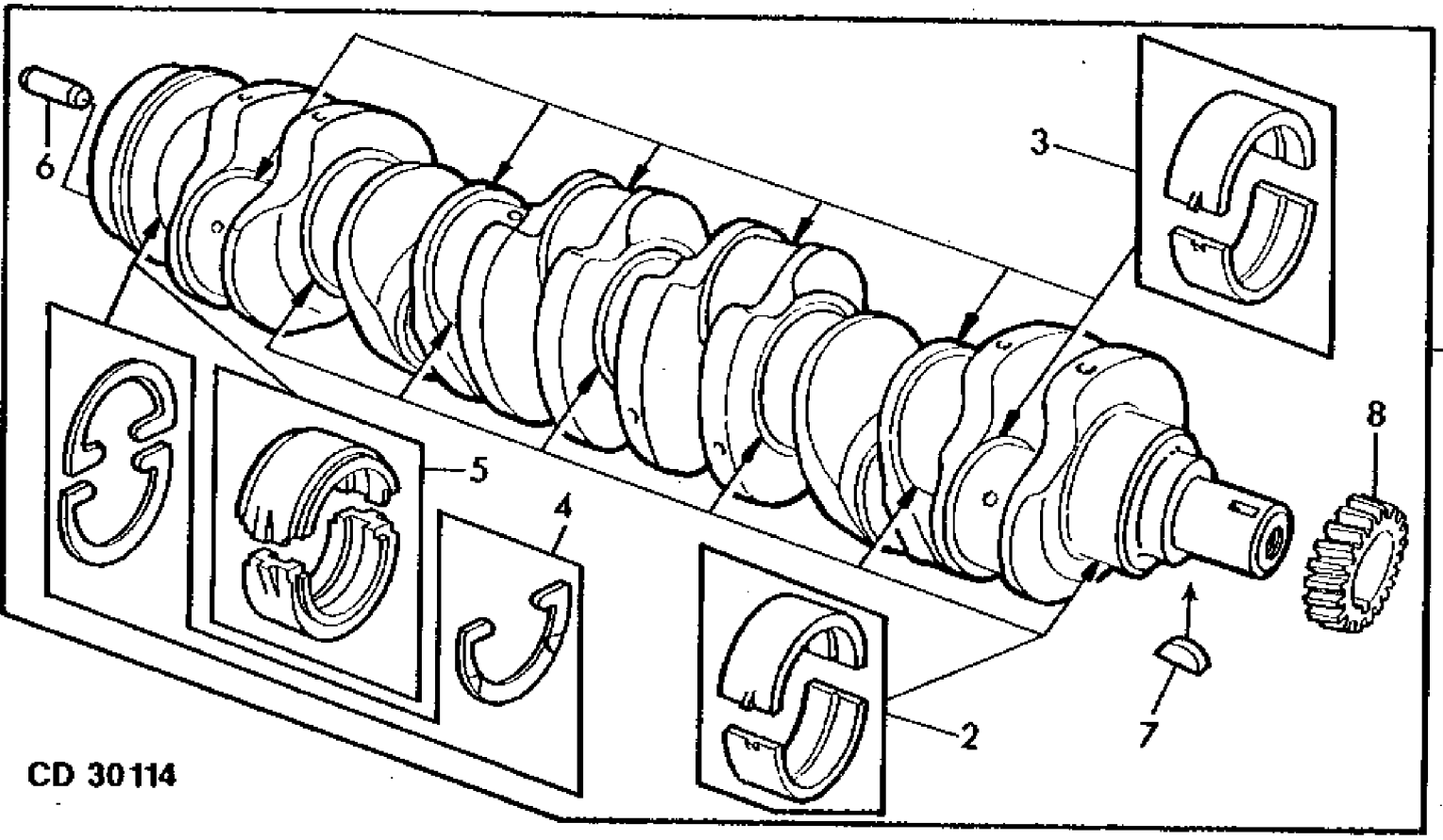

COPYRIGHT©1994 - 2008 DEERE & COMPANY Moline, Illinois All rights reserved

(1B03) CRANKSHAFT FOR 0.254MM(0.010 IN.)UNDERSIZE BEARINGS
VILEBREQUIN POUR PALIERS COTE REPAR,0.254MM(0.010IN.)
KURBELWELLE MIT 0,254MM(0,010IN.)KLEINEREM LAGERDURCHMESSER
ALBERO A GOMITO CON BRONZINE MINORATI DI 0,254MM(0.01 IN.)
CIGUENAL CON DIAMETRO,DE COJINETES REDUCIDO 0,254MM /0,010IN
VEVAXEL MED UNDERDIMENS. RAMLAGER(0,254MM-0,01 IN MINDRE)

KEY	PART NO.	PART NAME	QTY	SERIAL NO.	955	REMARKS
1	RE26205	KIT	AR		X	(A) KIT, MARKED "R" (SUB FOR DD13896)
2	RE27353	KIT	6		X	ID = -0.254 MM 0.010" (KIT (2) R87750)
3	RE27349	KIT	6		X	ID = -0.254 MM 0.010" (KIT (2) R87748)
4	RE13571	KIT	1		X	REAR, TK = STANDARD (KIT (3) R78598)
5	RE27351	KIT	1		X	REAR, ID = -0.254 MM 0.010" (KIT (2) R87749)
6	A120R	DOWEL PIN	1		X	
7	26H72	SHAFT KEY	1		X	1/8"X5/8"
8	T20094	GEAR	1		X	Z = 24

(A) CHECK LOCAL AVAILABILITY
VERIFIER DISPONIBILITE LOCALE
LOKALE VERFUEGBARKEIT UEBERPRUEFEN
ESAMINARE SI OTTENIBILE
VERIFICAR EL SUMINISTRO LOCAL
KONTROLLERA ATKOMLIGHET

COPYRIGHT©1994 - 2008 DEERE & COMPANY Moline, Illinois All rights reserved

(1B02) CRANKSHAFT-BEARINGS
PALIERS DE VILEBREQUIN
KURBELWELLEN-LAGER
BRONZINE DI BANCO
COJINETES DE BANCADA
RAMLAGER

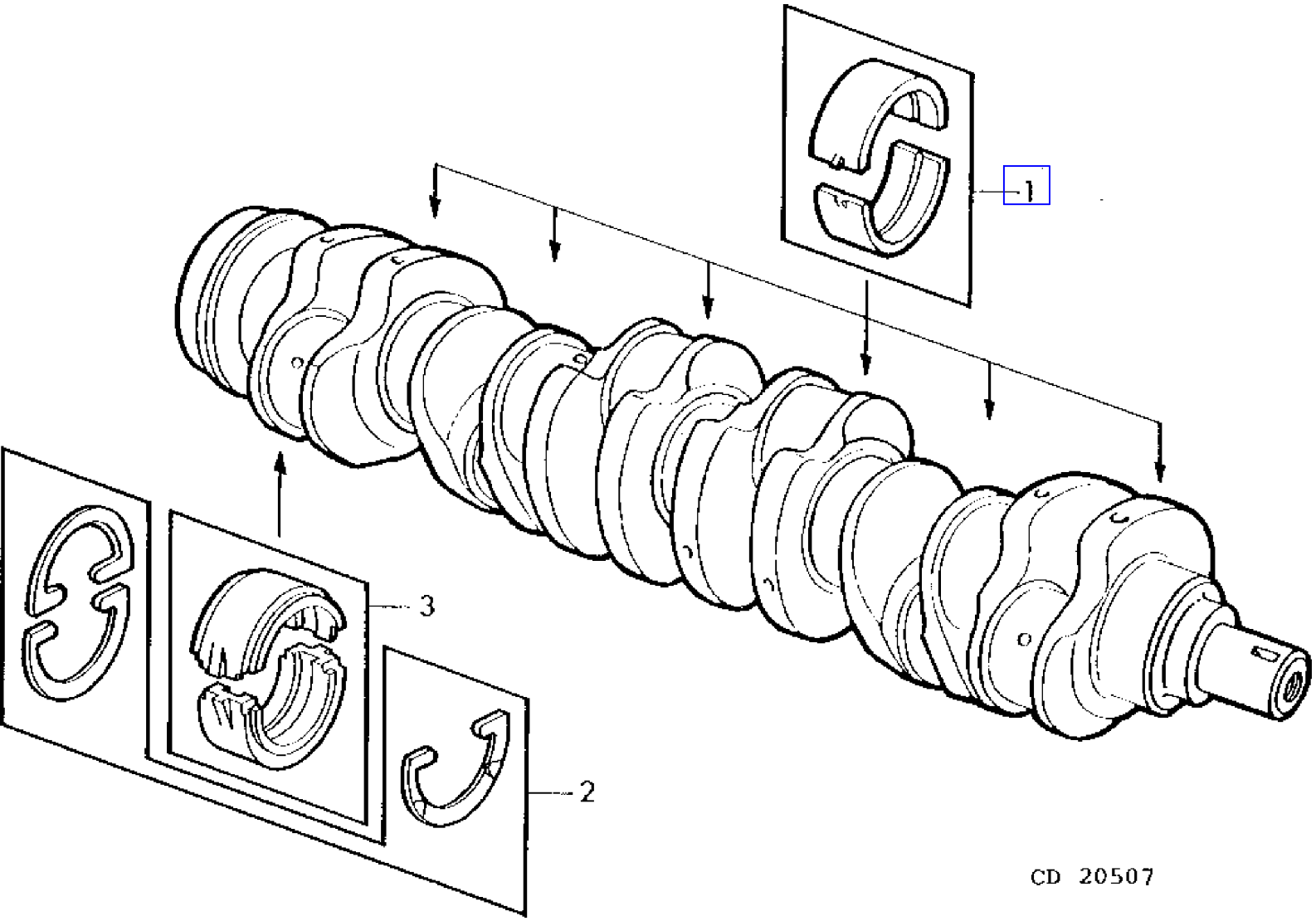

COPYRIGHT©1994 - 2008 DEERE & COMPANY Moline, Illinois All rights reserved

(1B02) CRANKSHAFT-BEARINGS
PALIERS DE VILEBREQUIN
KURBELWELLEN-LAGER
BRONZINE DI BANCO
COJINETES DE BANCADA
RAMLAGER

KEY	PART NO.	PART NAME	QTY	SERIAL NO.	REMARKS
1	RE27352	KIT	6		ID = STANDARD (KIT (2) R83380) (SUB FOR AT21140 KIT (2) T23214)
	RE27353	KIT	AR		ID = -0.254 MM 0.010" (KIT (2) R87550) (SUB FOR AT21108 KIT (2) T23552) (SUB FOR AT21110 KIT (2) T23554)
	RE27360	KIT	AR		ID = -0.508 MM 0.020" (KIT (2) R87756) (SUB FOR AT21112 KIT (2) T23556)
	RE27368	KIT	AR		ID = -0.762 MM 0.030" (KIT (2) R87559) (SUB FOR AT21114 KIT (2) T23558)
2	RE13571	KIT	1		TK = STANDARD (KIT (3) R78598)
	AR95932	KIT	AR		TK = 0.17 MM 0.007" (KIT (3) R64851)
3	RE27350	KIT	1		REAR, ID = STANDARD (KIT (2) R83381) (SUB FOR AR81786 KIT (2) R64264) (SUB FOR AT21139 KIT (2) T23215)
	RE27351	KIT	AR		REAR, ID = -0.254 MM 0.010" (KIT (2) R87749) (SUB FOR AR81787 KIT (2) R64847) (SUB FOR AR81788 KIT (2) R64848) (SUB FOR AT21130 KIT (2) T23574) (SUB FOR AT21132 KIT (2) T23576)
	RE27359	KIT	AR		REAR, ID = -0.508 MM 0.020" (KIT (2) R87755) (SUB FOR AR81789 KIT (2) R64849) (SUB FOR AT21134 KIT (2) T23578)
	RE27366	KIT	AR		REAR, ID = -0.762 MM 0.030" (KIT (2) R87758) (SUB FOR AR81790 KIT (2) R64850) (SUB FOR AT21136 KIT (2) T23580)

COPYRIGHT©1994 - 2008 DEERE & COMPANY Moline, Illinois All rights reserved

(1A25) CRANKSHAFT/TIMING GEARS
VILEBREQUIN/DISTRIBUTION
KURBELWELLE/STEUERRAEDER
ALBERO A COLLI/INGRANAGGI DISTR.
CIGUENAL/ENGRANAJES DE DISTRIBUCION
VEVAXEL/TIDHJUL

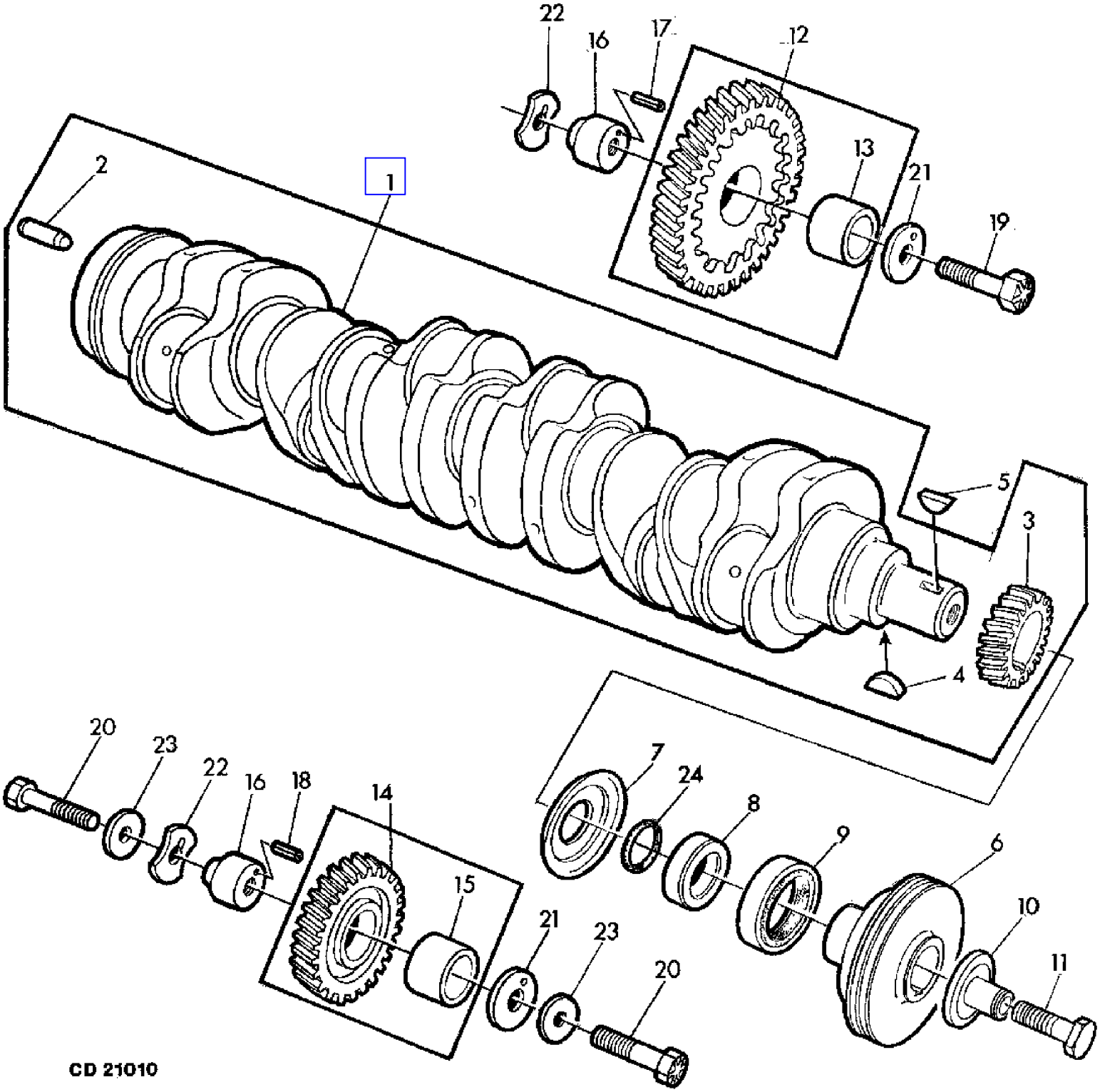

COPYRIGHT©1994 - 2008 DEERE & COMPANY Moline, Illinois All rights reserved

(1A25) CRANKSHAFT/TIMING GEARS
VILEBREQUIN/DISTRIBUTION
KURBELWELLE/STEUERRAEDER
ALBERO A COLLI/INGRANAGGI DISTR.
CIGUENAL/ENGRANAJES DE DISTRIBUCION
VEVAXEL/TIDHJUL

KEY	PART NO.	PART NAME	QTY	SERIAL NO.	955	REMARKS
1	AT22562	CRANKSHAFT	1		X	ASSY, INCL KEYS 2-4
2	A120R	DOWEL PIN	1		X	(SUB FOR T26565 APPL)
3	T20094	GEAR	1		X	Z = 24
4	26H72	SHAFT KEY	1		X	1/8"X5/8"
5	26H27	SHAFT KEY	1		X	5/16"X1-1/8"
6	R54796	PULLEY	1		X	
7	T20046	OIL SLINGER	1		X	
8	T30413	WEAR RING	1		X	(ORD R81989 W/ H35244)
	R81989	SLEEVE	1		X	
9	AR67942	SEAL	1		X	FRONT
10	R55872	PULLEY	1		X	
11	T23474	CAP SCREW	1		X	
12	AR91660	GEAR	1		X	UP, Z = 55, INCL KEY 13 (SUB FOR AT18009)
13	T20034	BUSHING	1		X	
14	AT24252	GEAR	1		X	LOW, ASSY, INCL KEY 15
15	T26321	BUSHING	1		X	
16	R89825	PIN	2		X	(SUB FOR T26323)
17	34H283	SPRING PIN	1		X	3/16"X1-1/8"
18	34H286	SPRING PIN	1		X	3/16"X1-1/2"
19	T26327	SCREW	1		X	
20	T26325	SCREW	2		X	
21	T26326	THRUST WASHER	2		X	
22	T26324	THRUST WASHER	2		X	
23	R76126	WASHER	2		X	(SUB FOR R42364, 24H1890)
24	H35244	RING	1		X	(FOR R81989)

COPYRIGHT©1994 - 2008 DEERE & COMPANY Moline, Illinois All rights reserved

(4C05) CROSS SHAKER DRIVE
ENTRAINEMENT DU SECOUEUR ROTATIF
ANTRIEB FUER QUERSCHUETTLER
COMANDO AGITATORE
TRANSMISION DEL SACUDIDOR TRANSVERSAL
TVAERSKAKARENS DRIVNING

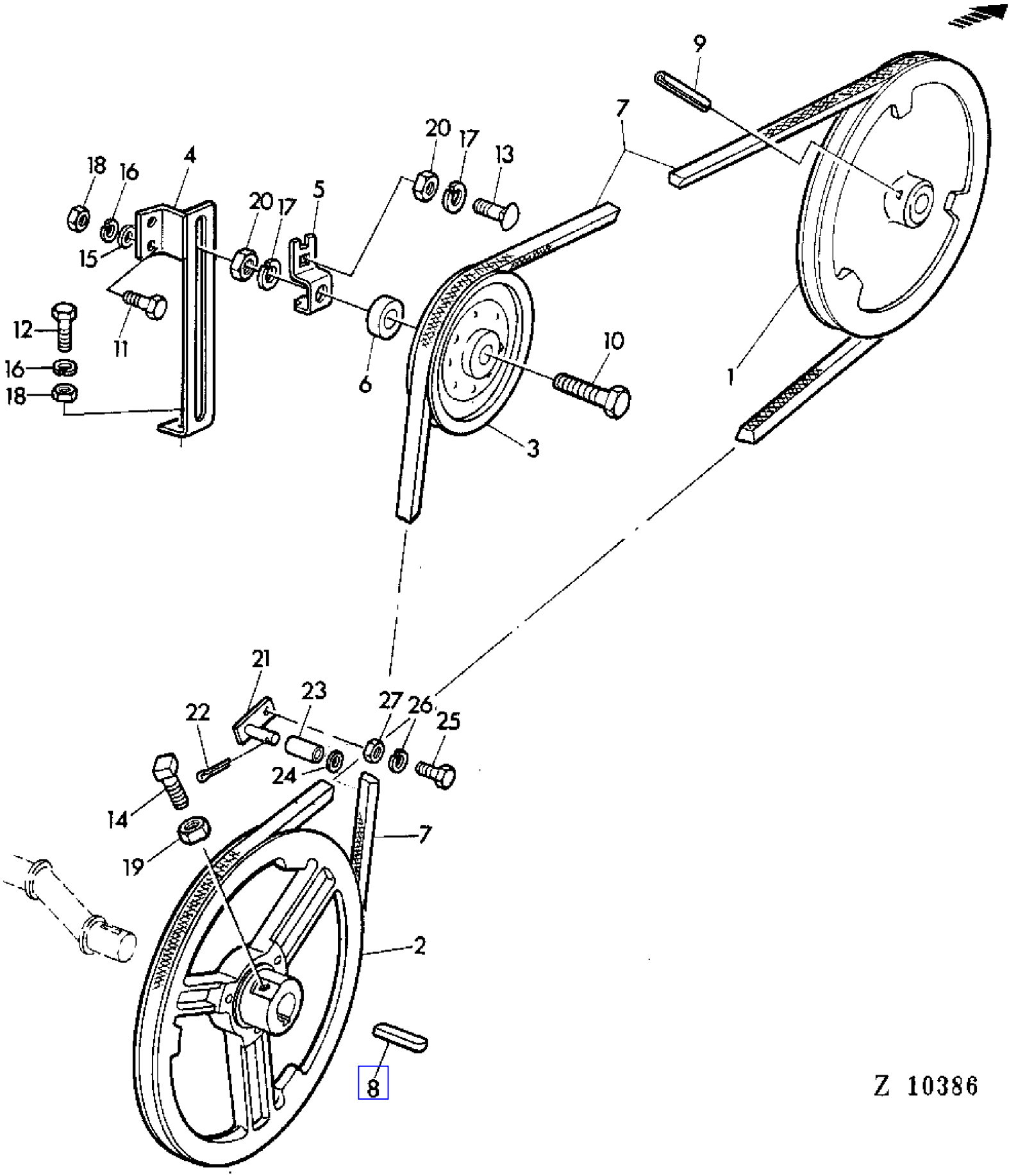

COPYRIGHT©1994 - 2008 DEERE & COMPANY Moline, Illinois All rights reserved

(4C05) CROSS SHAKER DRIVE
ENTRAINEMENT DU SECOUEUR ROTATIF
ANTRIEB FUER QUERSCHUETTLER
COMANDO AGITATORE
TRANSMISION DEL SACUDIDOR TRANSVERSAL
TVAERSKAKARENS DRIVNING

KEY	PART NO.	PART NAME	QTY	SERIAL NO.	955	REMARKS
1	Z10865	PULLEY	1	- 026422	X	
2	Z10866	PULLEY	1	- 026422	X	
3	AZ24263	IDLER	1	- 026422	X	
4	AZ21863	TIGHTENER	1	- 026422	X	
5	Z32881	HOLDER	1	- 026422	X	
6	Z32882	SPACER	1	- 026422	X	
7	Z32883	BELT	1	- 026422	X	
8	49M4111	SHAFT KEY	1	- 026422	X	8X7X40MM
9	34M7049	SPRING PIN	1	- 026422	X	8X50MM
10	19M7182	CAP SCREW	1	- 026422	X	M12X50
11	19M7376	CAP SCREW	2	- 026422	X	M8X22
12	19M7163	CAP SCREW	1	- 026422	X	M8X25
13	03M7107	BOLT	1	- 026422	X	M12X25
14	Z32433	SET SCREW	2	- 026422	X	10X30MM
15	24M7036	WASHER	2	- 026422	X	9MM
16	12M7008	LOCK WASHER	3	- 026422	X	8MM
17	12M7014	LOCK WASHER	2	- 026422	X	12MM
18	14M7029	NUT	3	- 026422	X	M8
19	14M7140	NUT	1	- 026422	X	M10
20	14M7031	NUT	2	- 026422	X	M12
21	AZ23913	RETAINER	1	- 026422	X	
22	11M7013	COTTER PIN	1	- 026422	X	3,2X20MM
23	Z34900	BUSHING	1	- 026422	X	
24	24M7043	WASHER	1	- 026422	X	12MM
25	19M7375	CAP SCREW	1	- 026422	X	M6X18
26	12M7012	LOCK WASHER	1	- 026422	X	6MM
27	14M7027	NUT	1	- 026422	X	M6

COPYRIGHT©1994 - 2008 DEERE & COMPANY Moline, Illinois All rights reserved

(4C07) CROSS SHAKER DRIVE
COMMANDE DU SECOUEUR ROTATIF
ANTRIEB FUER QUERSCHUETTLER
COMANDO SCUOTITORE INCROCIATO
TRANSMISION DEL SACUDIDOR TRANSVERSAL
TVARSKAKARDRIVNING

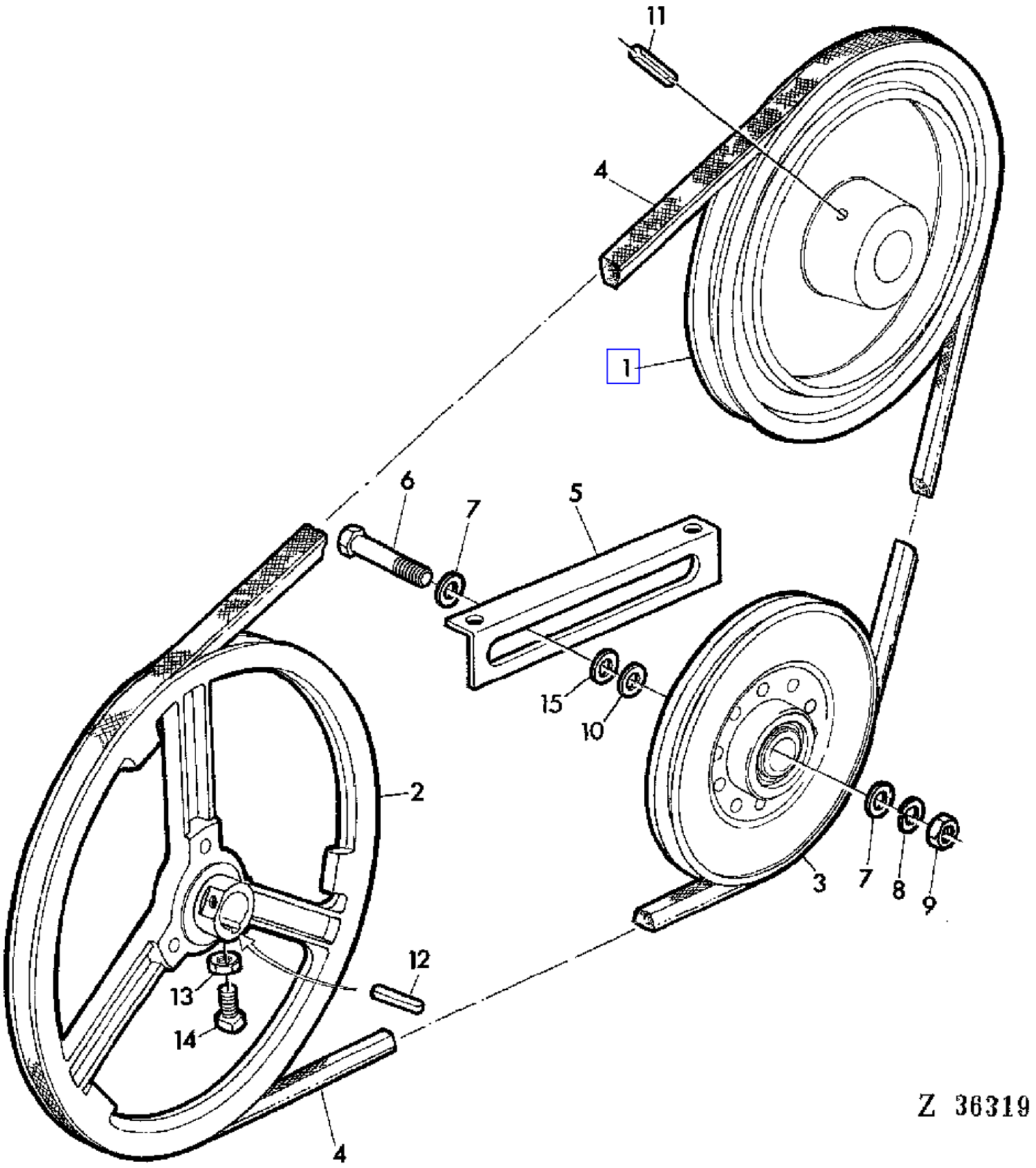

COPYRIGHT©1994 - 2008 DEERE & COMPANY Moline, Illinois All rights reserved

(4C07) CROSS SHAKER DRIVE
COMMANDE DU SECOUEUR ROTATIF
ANTRIEB FUER QUERSCHUETTLER
COMANDO SCUOTITORE INCROCIATO
TRANSMISION DEL SACUDIDOR TRANSVERSAL
TVARSKAKARDRIVNING

KEY	PART NO.	PART NAME	QTY	SERIAL NO.		955	REMARKS
1	Z10865	PULLEY	1	026423	-	X	
2	Z10866	PULLEY	1	026423	-	X	
3	AZ24263	IDLER	1	026423	-	X	
4	Z35965	BELT	1	026423	-	X	
5	Z35963	ANGLE	1	026423	-	X	
6	19M7273	CAP SCREW	1	026423	-	X	M12X60
7	24M7102	WASHER	2	026423	-	X	14MM
8	12M7014	LOCK WASHER	1	026423	-	X	12MM
9	14M7031	NUT	1	026423	-	X	M12
10	24M7044	WASHER	5	026423	-	X	13MM
11	34M7049	SPRING PIN	1	026423	-	X	8X50MM
12	49M4111	SHAFT KEY	1	026423	-	X	8X7X40MM
13	14M7140	NUT	2	026423	-	X	M10
14	Z32433	SET SCREW	2	026423	-	X	10X30MM
15	24M7107	WASHER	2	026423	-	X	14MM

COPYRIGHT©1994 - 2008 DEERE & COMPANY Moline, Illinois All rights reserved

(4B24) CROSS SHAKER SHAFT AND HUB
ARBRE ET MOYEU DE SECOUEUR ROTATIF
QUERSCHUETTLERWELLE UND NABEN
ALBERO E MOZZI DEL AGITATORE
EJES Y CUBOS DE ARRASTRE DEL SACUDIDOR TRANSVERSAL
TVAERSKAKARAXEL OCH NAV

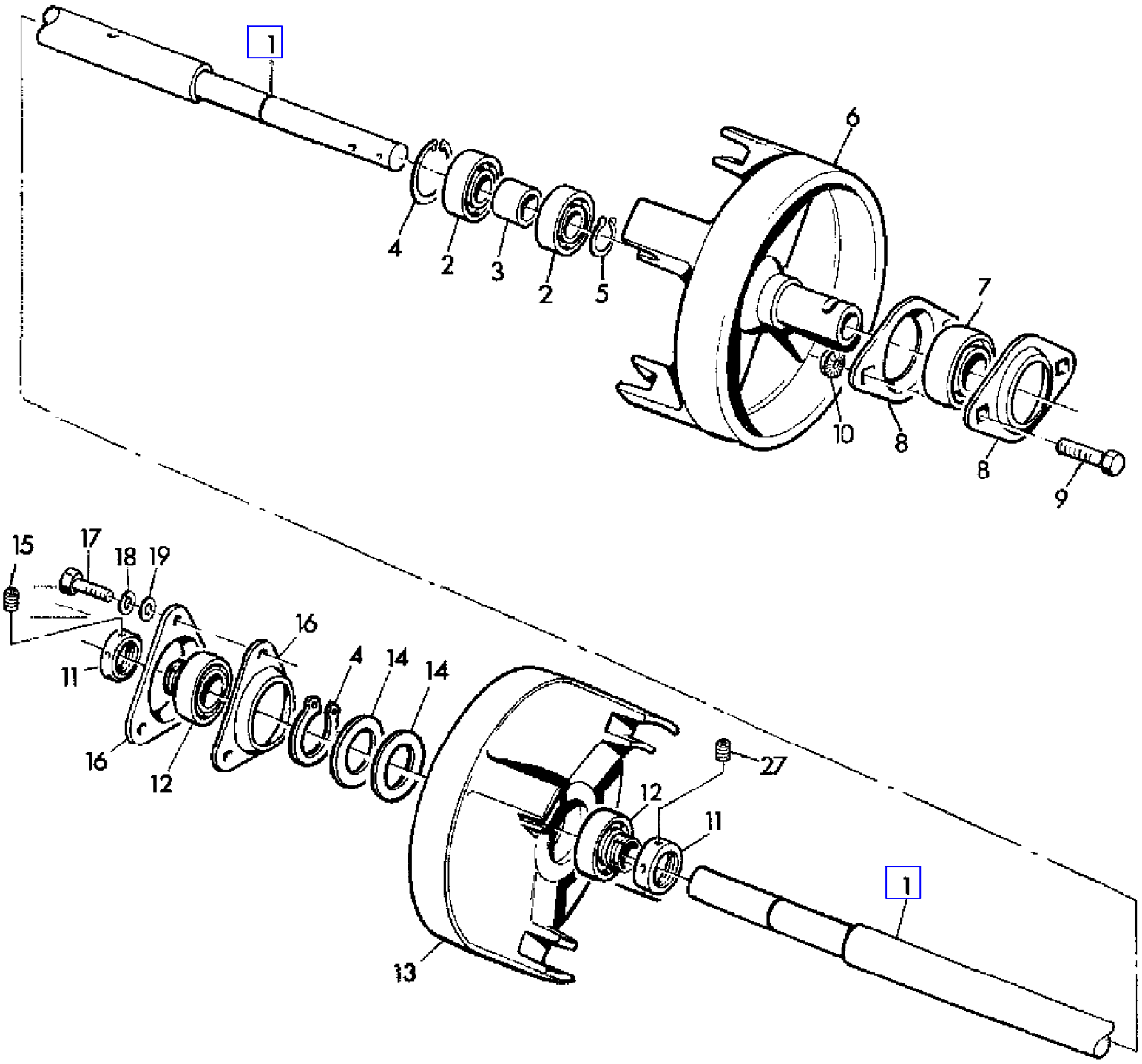

Z 27832

COPYRIGHT©1994 - 2008 DEERE & COMPANY Moline, Illinois All rights reserved

(4B24) CROSS SHAKER SHAFT AND HUB
ARBRE ET MOYEU DE SECOUEUR ROTATIF
QUERSCHUETTLERWELLE UND NABEN
ALBERO E MOZZI DEL AGITATORE
EJES Y CUBOS DE ARRASTRE DEL SACUDIDOR TRANSVERSAL
TVAERSKAKARAXEL OCH NAV

KEY	PART NO.	PART NAME	QTY	SERIAL NO.		955	REMARKS
1	Z30950	SHAFT	1	-	026422	X	
2	AZ20217	BALL BEARING	2	-	026422	X	
3	Z30956	BUSHING	1	-	026422	X	
4	40M1828	SNAP RING	2	-	026422	X	25X1,5MM
5	40M1865	SNAP RING	1	-	026422	X	52X2MM
6	Z10756	HUB	1	-	026422	X	RH
7	AZ23315	BALL BEARING	1	-	026422	X	(SUB FOR AZ18667)
8	Z30957	PRESSED FLANGED HOUSING	2	-	026422	X	
9	19M7268	CAP SCREW	2	-	026422	X	M12X25
10	12M7055	WASHER	2	-	026422	X	12MM
11	AZ10044	ECCENTRIC LOCKING COLLAR	2	-	026422	X	ASSY, INCL KEY 27
12	JD39102	BALL BEARING	2	-	026422	X	
13	Z10757	HUB	1	-	026422	X	LH
14	Z24651	WASHER	4	-	026422	X	52,2X40X1MM
15	22M7079	SET SCREW	2	-	026422	X	
16	P47232	PRESSED FLANGED HOUSING	2	-	026422	X	
17	19M7163	CAP SCREW	3	-	026422	X	M8X25
18	12M7008	LOCK WASHER	3	-	026422	X	8MM
19	24M7036	WASHER	3	-	026422	X	9MM

COPYRIGHT©1994 - 2008 DEERE & COMPANY Moline, Illinois All rights reserved

(4B25) CROSS SHAKER SHAFT AND HUB
ARBRE ET MOYEUX DE SECOUEUR ROTATIF
QUERSCHUETTLERWELLE UND NABEN
ALBERO E MOZZI DELLO SCUOTITORE INCROCIATO
EJE Y CUBO DE LA CRUCETA DEL SACUDIDOR TRANSVERSAL
TVARSKAKARAXEL OCH NAV

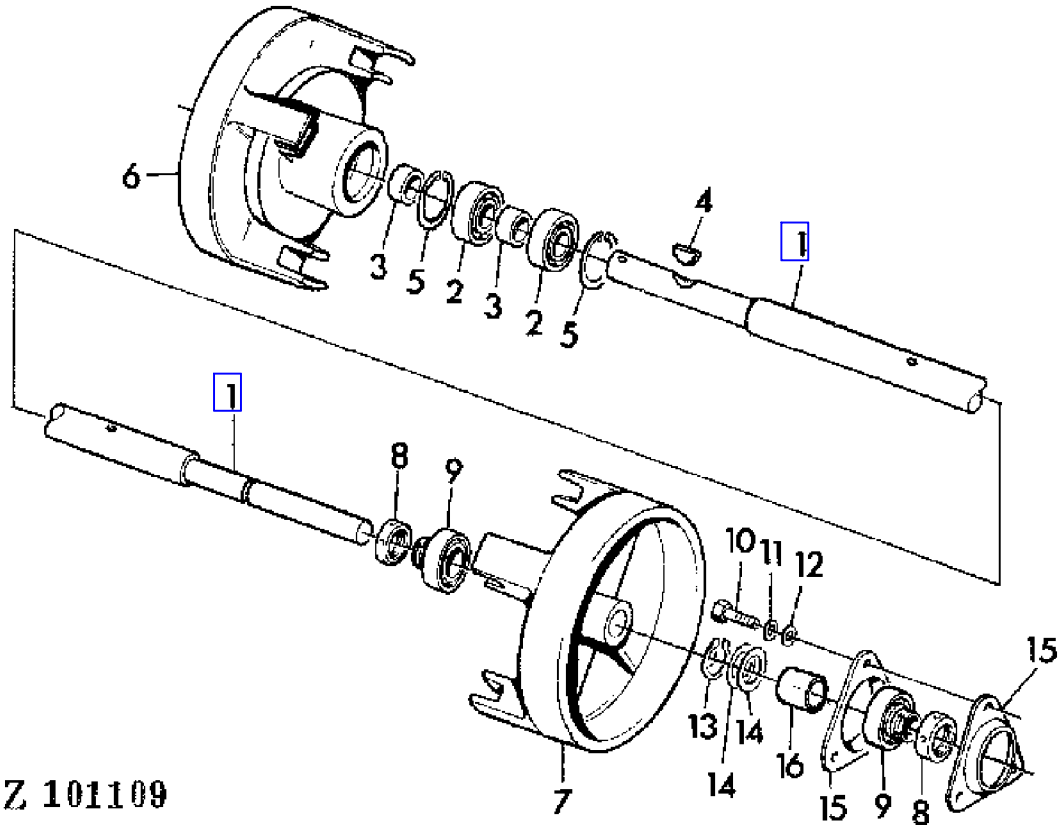

COPYRIGHT©1994 - 2008 DEERE & COMPANY Moline, Illinois All rights reserved

(4B25) CROSS SHAKER SHAFT AND HUB
ARBRE ET MOYEUX DE SECOUEUR ROTATIF
QUERSCHUETTLERWELLE UND NABEN
ALBERO E MOZZI DELLO SCUOTITORE INCROCIATO
EJE Y CUBO DE LA CRUCETA DEL SACUDIDOR TRANSVERSAL
TVARSKAKARAXEL OCH NAV

KEY	PART NO.	PART NAME	QTY	SERIAL NO.		955	REMARKS
1	Z45851	SHAFT	1	026423	-	X	(SUB FOR Z35967, Z41640)
2	AZ20217	BALL BEARING	2	026423	-	X	
3	L16548	SPACER	2	026423	-	X	
4	26M7001	SHAFT KEY	1	026423	-	X	8X9MM
5	40M1865	SNAP RING	2	026423	-	X	52X2MM
6	Z11057	HUB	1	026423	-	X	
7	Z10757	HUB	1	026423	-	X	
8	AZ10044	ECCENTRIC LOCKING COLLAR	2	026423	-	X	
9	JD39102	BALL BEARING	2	026423	-	X	
10	19M7298	CAP SCREW	3	026423	-	X	M8X35
11	12M7008	LOCK WASHER	AR	026423	-	X	8MM
12	24M7036	WASHER	AR	026423	-	X	9MM
13	40M1828	SNAP RING	1	026423	-	X	25X1,2MM
14	Z24651	WASHER	AR	026423	-	X	
15	P47232	PRESSED FLANGED HOUSING	2	026423	-	X	
16	Z42059	BUSHING	1	030883	-	X	

COPYRIGHT©1994 - 2008 DEERE & COMPANY Moline, Illinois All rights reserved

(4B22) CROSS SHAKER STARS
ETOILE DE SECOUEUR ROTATIF
QUERSCHUETTLERSTERNE
STELLE DEL AGITATORE
ESTRELLAS DEL SACUDIDOR TRANSVERSAL
TVAERSKAKARSTJAERNOR

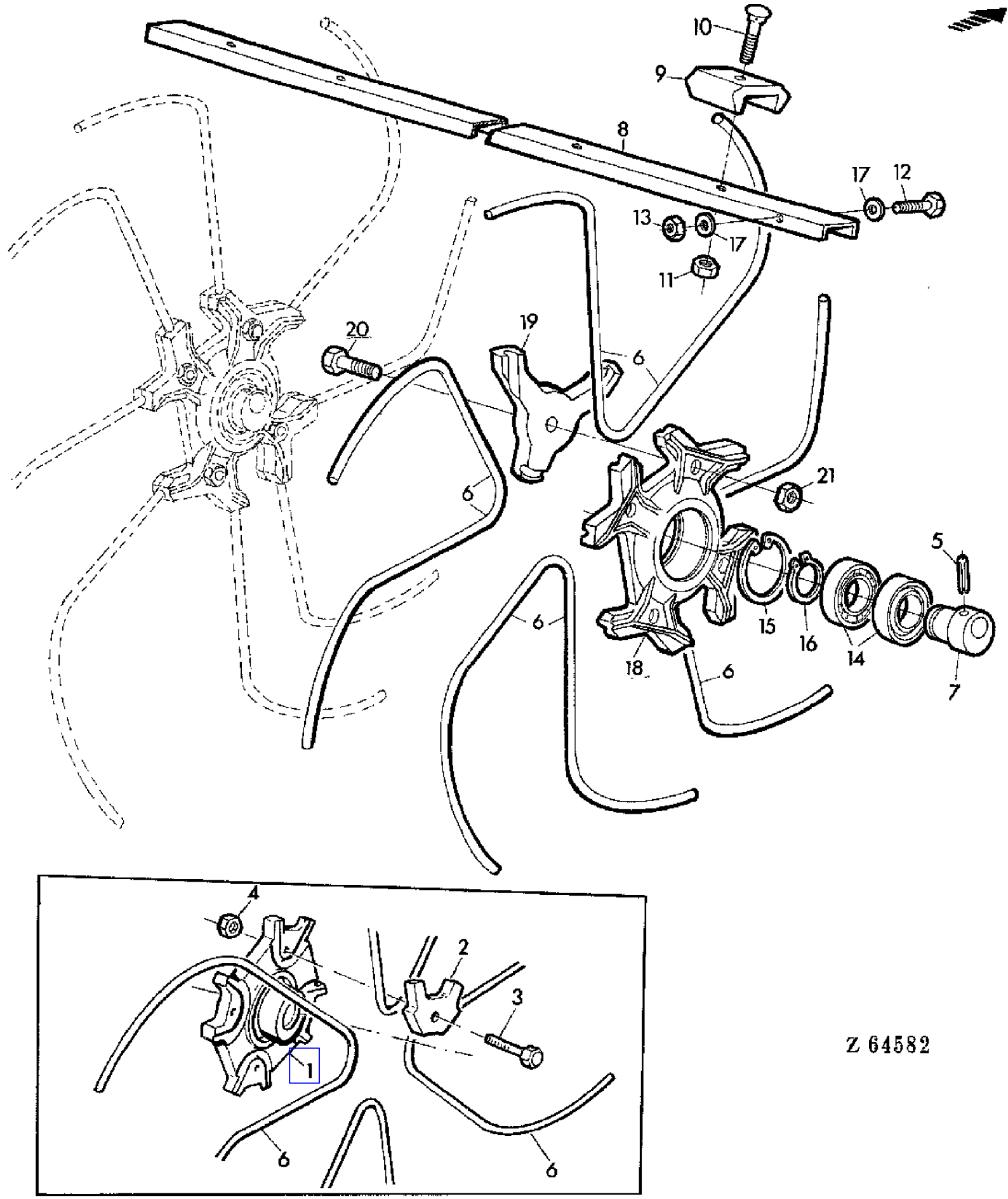

COPYRIGHT©1994 - 2008 DEERE & COMPANY Moline, Illinois All rights reserved

(4B22) CROSS SHAKER STARS
ETOILE DE SECOUEUR ROTATIF
QUERSCHUETTLERSTERNE
STELLE DEL AGITATORE
ESTRELLAS DEL SACUDIDOR TRANSVERSAL
TVAERSKAKARSTJAERNOR

KEY	PART NO.	PART NAME	QTY	SERIAL NO.		955	REMARKS
1	Z10755	HUB	4		- 004732	X	
2	Z10754	CLAMP	16		- 004732	X	
3	19M7361	CAP SCREW	16		- 004732	X	M12X50
4	14M7168	LOCK NUT	16		- 004732	X	M12
5	34M7049	SPRING PIN	4			X	8X50MM
6	Z30931	TINE	16			X	
7	Z30932	HUB	4			X	
8	Z30953	CHANNEL	4			X	
9	Z30955	GUIDE	16			X	
10	03M7054	BOLT	8			X	M8X20
11	14M7166	LOCK NUT	8			X	M8
12	19M7359	CAP SCREW	4			X	M10X55
13	14M7167	LOCK NUT	4			X	M10
14	AZ20216	BALL BEARING	8			X	
15	40M5099	SNAP RING	4			X	75X2,5MM
16	40M1837	SNAP RING	4			X	45X1,75MM
17	24M7028	WASHER	8			X	10,5MM
18	Z12157	CASE	4	004733	-	X	(SUB FOR Z10946 APPL)
19	Z10947	CLAMP	16	004733	-	X	
20	19M7358	CAP SCREW	16	004733	-	X	M10X40
21	14M7455	LOCK NUT	16	004733	-	X	M10

COPYRIGHT©1994 - 2008 DEERE & COMPANY Moline, Illinois All rights reserved

(4B14) CURTAIN
RIDEAUX
SPRITZTUECHER
TENDINE
PANTALLAS
STANKDUK

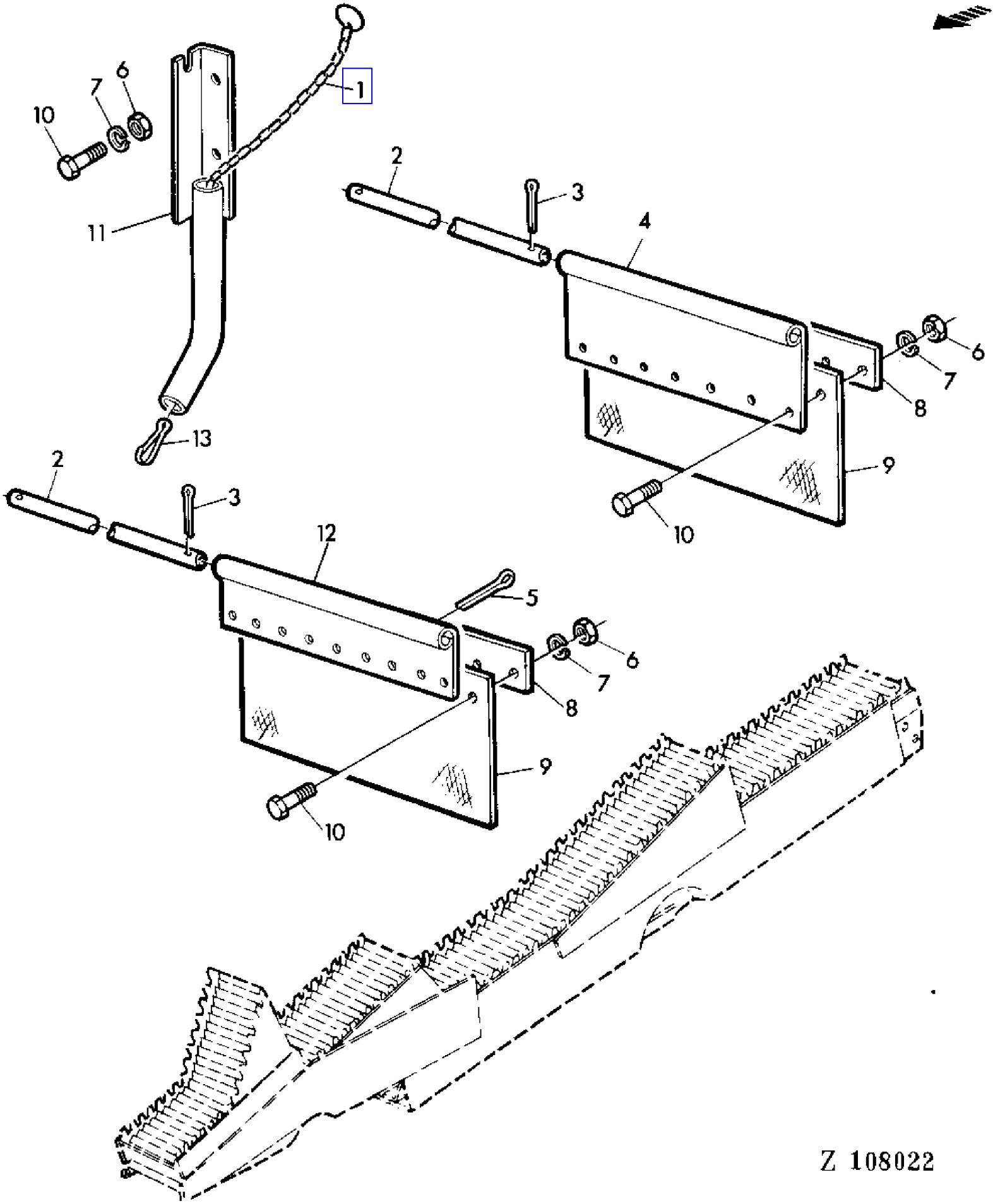

COPYRIGHT©1994 - 2008 DEERE & COMPANY Moline, Illinois All rights reserved

(PC4146) 955 Combine

(4B14) CURTAIN
RIDEAUX
SPRITZTUECHER
TENDINE
PANTALLAS
STANKDUK

KEY	PART NO.	PART NAME	QTY	SERIAL NO.	955	REMARKS
1	AZ25390	LINK CHAIN	1		X	(SUB FOR AZ12870)
2	Z20060	PIN	1		X	
3	11M7013	COTTER PIN	2		X	3X20MM
4	Z20059	HOLDER	1		X	
5	11M7037	COTTER PIN	AR		X	6,3X36MM
6	14M7027	NUT	AR		X	M6
7	12M7012	LOCK WASHER	AR		X	6MM
8	Z20058	STRAP	1		X	
9	Z35497	LIMIT CURTAIN	1		X	(SUB FOR Z38002 APPL)
10	19M7159	CAP SCREW	AR		X	M6X15
11	AZ27041	GUIDE	1		X	
12	Z39035	HOLDER	1	XXXX -	X	FRONT
13	99M7039	HOOK	1		X	

COPYRIGHT©1994 - 2008 DEERE & COMPANY Moline, Illinois All rights reserved

(3G06) CUTTING PLATFORM DRIVE SHAFT
ARBRE D'ENTRAINEMENT DE PLATE-FORME DE COUPE
SCHNEIDWERK-ANTRIEBSWELLE
ALBERO COMANDO DELLA PIATTAFORMA DI TAGLIO
EJE DE ACCIONAMIENTO DE LA PLATAFORMA DE CORTE
SKARBORDETS DRIVAXEL

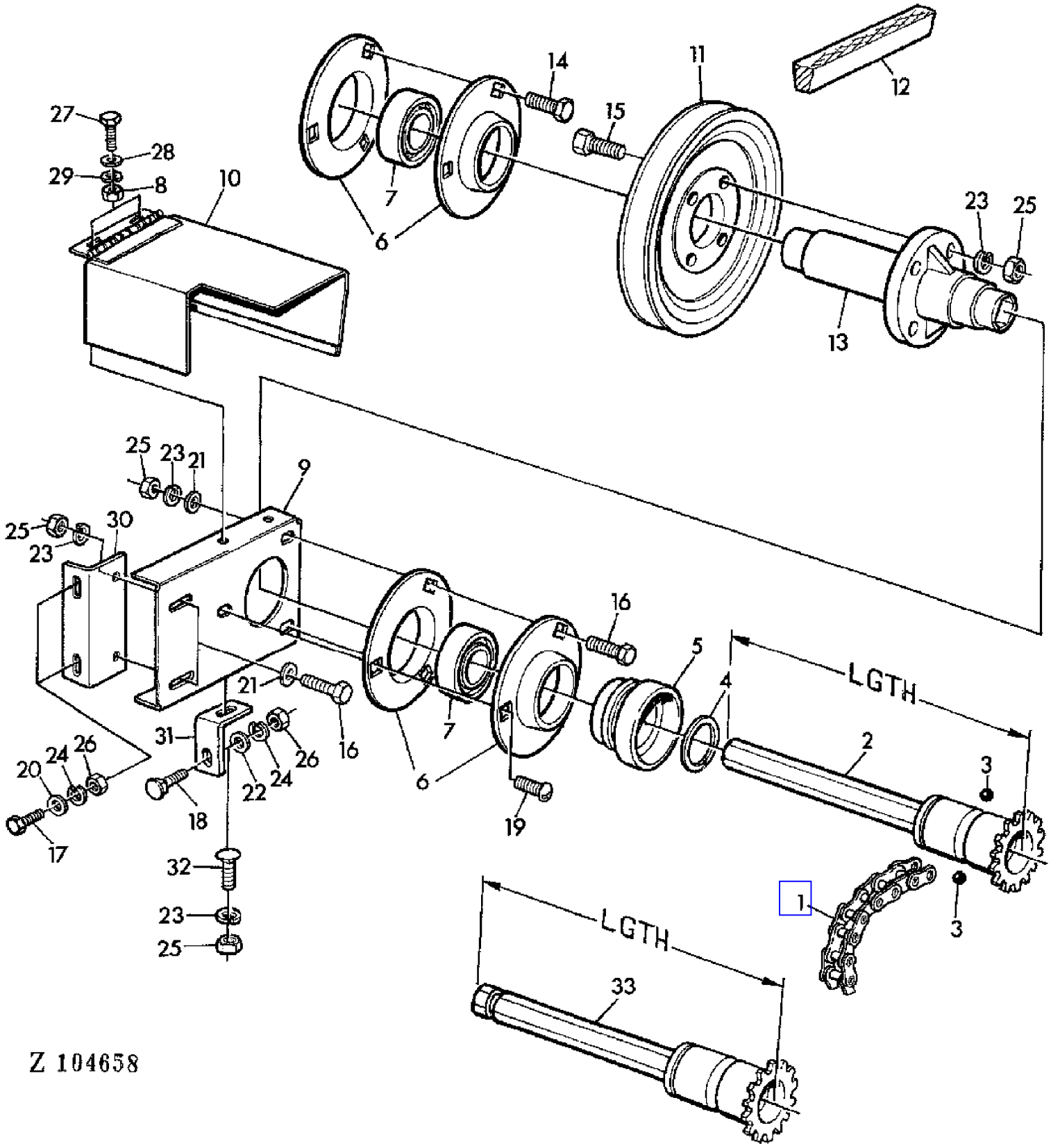

COPYRIGHT©1994 - 2008 DEERE & COMPANY Moline, Illinois All rights reserved

(3G06) CUTTING PLATFORM DRIVE SHAFT
ARBRE D'ENTRAINEMENT DE PLATE-FORME DE COUPE
SCHNEIDWERK-ANTRIEBSWELLE
ALBERO COMANDO DELLA PIATTAFORMA DI TAGLIO
EJE DE ACCIONAMIENTO DE LA PLATAFORMA DE CORTE
SKARBORDETS DRIVAXEL

KEY	PART NO.	PART NAME	QTY	SERIAL NO.	955	REMARKS
1	AN102383	LINK CHAIN	1		X	
2	AZ24206	DRIVE SHAFT	1		X	LGTH = 500 MM 19.7"
3	N104243	BALL	3		X	
4	H25360	SNAP RING	1		X	
5	AH89038	QUICK COUPLER	1		X	(SUB FOR AN102530)
6	Z34740	QUILL	4		X	
7	AZ23315	BALL BEARING	2		X	
8	14M7029	NUT	2		X	M8
9	Z35317	BRACKET	1		X	
10	AZ28411	GUARD	1		X	(SUB FOR AZ20261)
11	Z10686	PULLEY	1		X	
12	Z30130	BELT	1	- 024652	X	LGTH = 3925 MM 154.53"
	Z39313	BELT	1	024653 -	X	LGTH = 3875 MM 152.56"
	Z25670	BELT	1		X	(A)
13	Z11085	HUB	1		X	(SUB FOR Z10949)
14	19M7168	CAP SCREW	3		X	M10X30
15	19M7169	CAP SCREW	4		X	M10X35
16	19M7167	CAP SCREW	2		X	M10X25
17	19M7268	CAP SCREW	2		X	M12X25
18	03M7089	BOLT	1		X	M12X30
19	21M7190	SCREW	1		X	M10X25
20	24M7038	WASHER	AR		X	14MM
21	24M7040	WASHER	AR		X	11MM
22	24M7047	WASHER	AR		X	13MM
23	12M7013	LOCK WASHER	AR		X	10MM
24	12M7014	LOCK WASHER	AR		X	12MM
25	14M7140	NUT	AR		X	M10
26	14M7031	NUT	AR		X	M12
27	19M7139	CAP SCREW	2		X	M8X20
28	24M7036	WASHER	AR		X	9MM
29	12M7008	LOCK WASHER	2		X	8MM
30	Z35318	ANGLE	1		X	
31	Z35321	HOLDER	1		X	
32	03M7084	BOLT	AR		X	M10X25
33	AZ36926	DRIVE SHAFT	1		X	LGTH = 680 MM 26.77" (SUB FOR AZ33655)

(A) FOR LONG FEEDER CONVEYOR
POUR CONVOYEUR D'ALIMENTATION LONG
FUER SCHRAEGFOERDERER LANG
PER CONVOGLIATORE LUNGO
PARA ELEVADOR DE MIES LARGO
FOR LANG INMATNINGSELEVATOR

COPYRIGHT©1994 - 2008 DEERE & COMPANY Moline, Illinois All rights reserved

(2D16) CUTTING PLATFORM PRESSURE INDICATOR
MANOMETRE - PLATE-FORME DE COUPE
DRUCKANZEIGE-SCHNEIDWERK
INDICATORE PRESSIONE PER PIATTAFORMA DI TAGLIO
INDICADOR DE PRESION-PLATAFORMA DE CORTE
TRYCKMATARE FOR SKARBORD

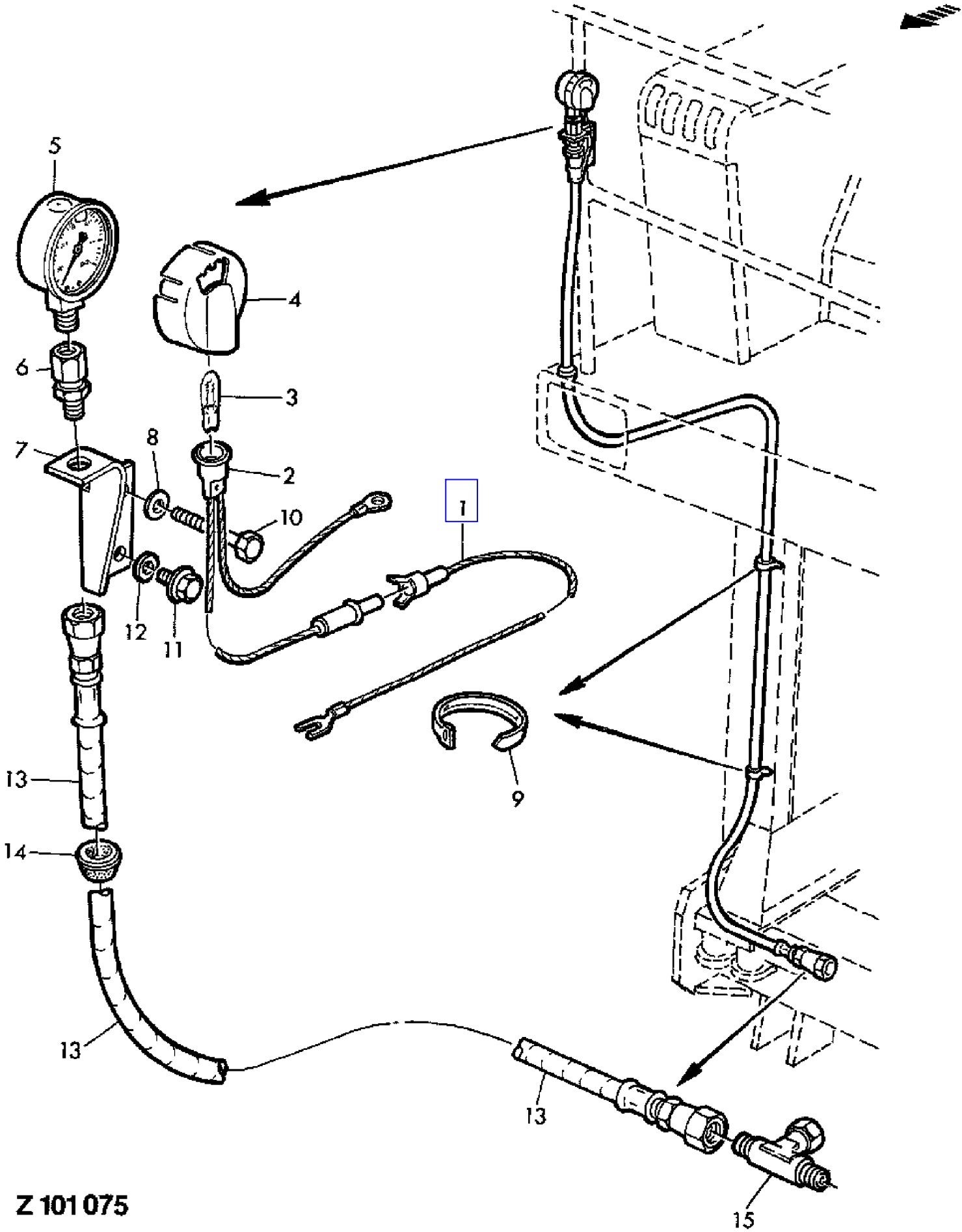

COPYRIGHT©1994 - 2008 DEERE & COMPANY Moline, Illinois All rights reserved

(2D16) CUTTING PLATFORM PRESSURE INDICATOR
MANOMETRE - PLATE-FORME DE COUPE
DRUCKANZEIGE-SCHNEIDWERK
INDICATORE PRESSIONE PER PIATTAFORMA DI TAGLIO
INDICADOR DE PRESION-PLATAFORMA DE CORTE
TRYCKMATARE FOR SKARBORD

KEY	PART NO.	PART NAME	QTY	SERIAL NO.	955	REMARKS
1	AZ31875	POWER CORD	1		X	
2	AH109610	SOCKET	1		X	
3	AH108380	BULB	1		X	
4	H111378	COVER	1		X	
5	AH108080	PRESSURE GAUGE	1		X	
6	AB18206	ADAPTER	1		X	
7	H109300	BRACKET	1		X	
8	24M7054	WASHER	1		X	AR, 6,4MM
9	H77698	TIE BAND	AR		X	
10	19M5938	CAP SCREW	1		X	AR, M6X40
11	H78354	SCREW	AR		X	AR
12	24H1714	WASHER	AR		X	AR
13	AZ31905	HYDRAULIC HOSE	1		X	
14	N119177	GROMMET	1		X	
15	AZ25484	TEE FITTING	1		X	

COPYRIGHT©1994 - 2008 DEERE & COMPANY Moline, Illinois All rights reserved

(4B04) CYLINDER AND BEATER VARIABLE SPEED DRIVE ADJUSTING BRACKET
ETRIER DE REGLAGE DU VARIATEUR DU BATTEUR ET DU TIRE-PAILLE
VERSTELLBUEGEL FUER DRESCH-UND WENDETROMMELVARIATOR
BRACCIO DEL TENDITORE PER VARIATORE BATTITORE E LANCIAPAGLIA
HORQUILLA PARA VARIADORES DEL CILINDRO DESGRAN.Y BATIDOR
JUSTERGAFFEL FOER CYLINDERNS OCH HALMVINDANS VARIATOR

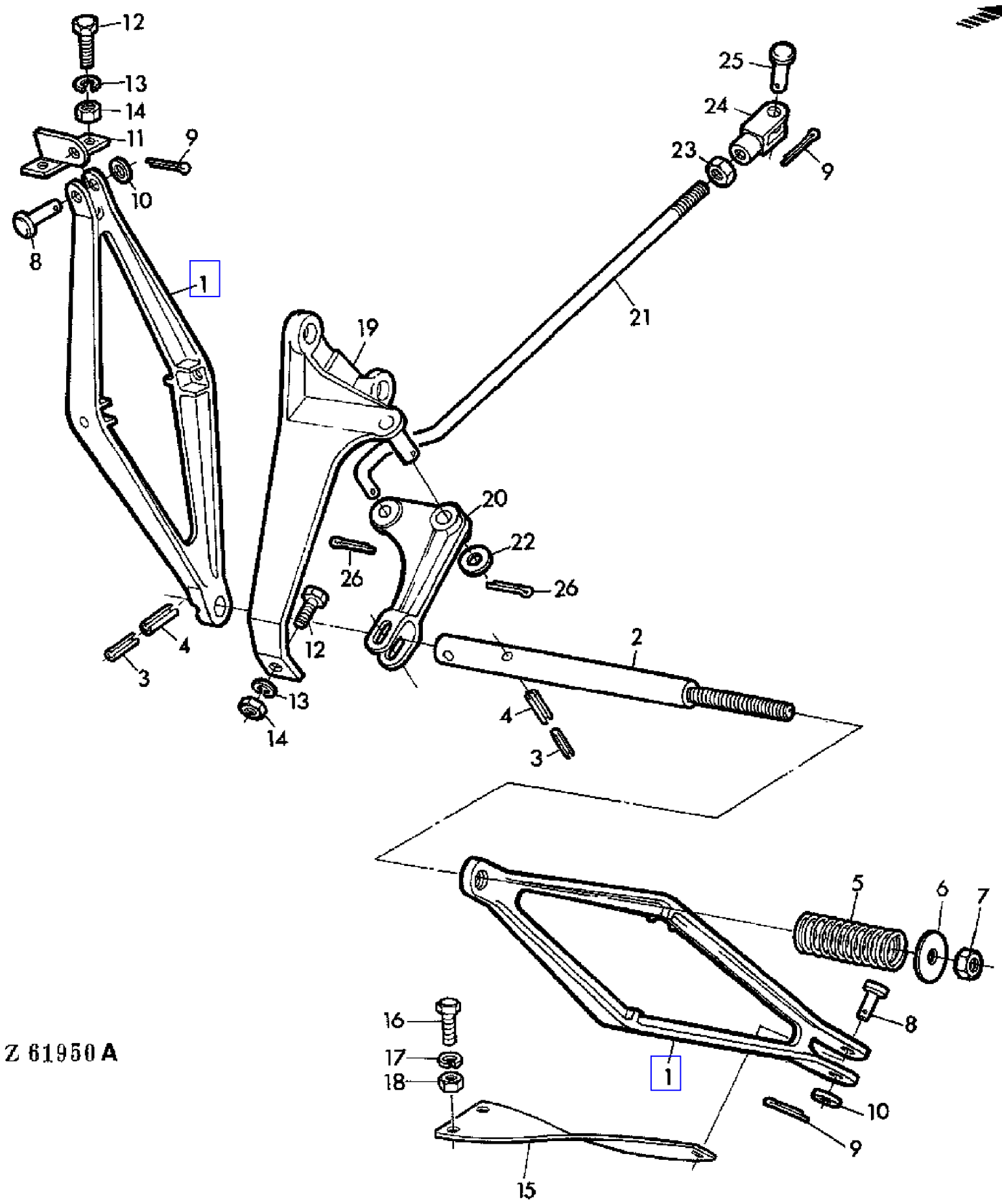

COPYRIGHT©1994 - 2008 DEERE & COMPANY Moline, Illinois All rights reserved

(4B04) CYLINDER AND BEATER VARIABLE SPEED DRIVE ADJUSTING BRACKET
ETRIER DE REGLAGE DU VARIATEUR DU BATTEUR ET DU TIRE-PAILLE
VERSTELLBUEGEL FUER DRESCH-UND WENDETROMMELVARIATOR
BRACCIO DEL TENDITORE PER VARIATORE BATTITORE E LANCIAPAGLIA
HORQUILLA PARA VARIADORES DEL CILINDRO DESGRAN.Y BATIDOR
JUSTERGAFFEL FOER CYLINDERNS OCH HALMVINDANS VARIATOR

KEY	PART NO.	PART NAME	QTY	SERIAL NO.	955	REMARKS
1	Z10146	ADJUSTER	2		X	
2	Z20833	PIN	1		X	
3	34M7058	SPRING PIN	2		X	7X55MM
4	34M7056	SPRING PIN	2		X	12X55MM
5	Z20828	COMPRESSION SPRING	1		X	
6	24M7102	WASHER	1		X	14MM
7	14M7168	LOCK NUT	1		X	M12
8	Z24490	PIN	2		X	15/32"X50X45
9	11M7022	COTTER PIN	3		X	4X30MM
10	24M7111	WASHER	2		X	13MM
11	AZ10407	HOLDER	1		X	
12	19M7167	CAP SCREW	3		X	M10X25
13	12M7013	LOCK WASHER	3		X	10MM
14	14M7140	NUT	3		X	M10
15	Z20835	HOLDER	1		X	
16	19M7139	CAP SCREW	2		X	M8X20
17	12M7008	LOCK WASHER	2		X	8MM
18	14M7029	NUT	2		X	M8
19	AZ10408	BRACKET	1		X	
20	Z10610	LEVER	1		X	
21	Z28422	ROD	1		X	
22	24M7113	WASHER	1		X	17MM
23	14M7142	NUT	1		X	M16
24	Z28421	YOKE	1		X	
25	45M4901	PIN	1		X	12X40X35MM
26	11M7020	COTTER PIN	1		X	4X25MM

COPYRIGHT©1994 - 2008 DEERE & COMPANY Moline, Illinois All rights reserved

(1A17) CYLINDER BLOCK
BLOC-CYLINDRES
ZYLINDERBLOCK
BLOCCO CILINDRI
BLOQUE DE CILINDROS
CYLINDERBLOCK

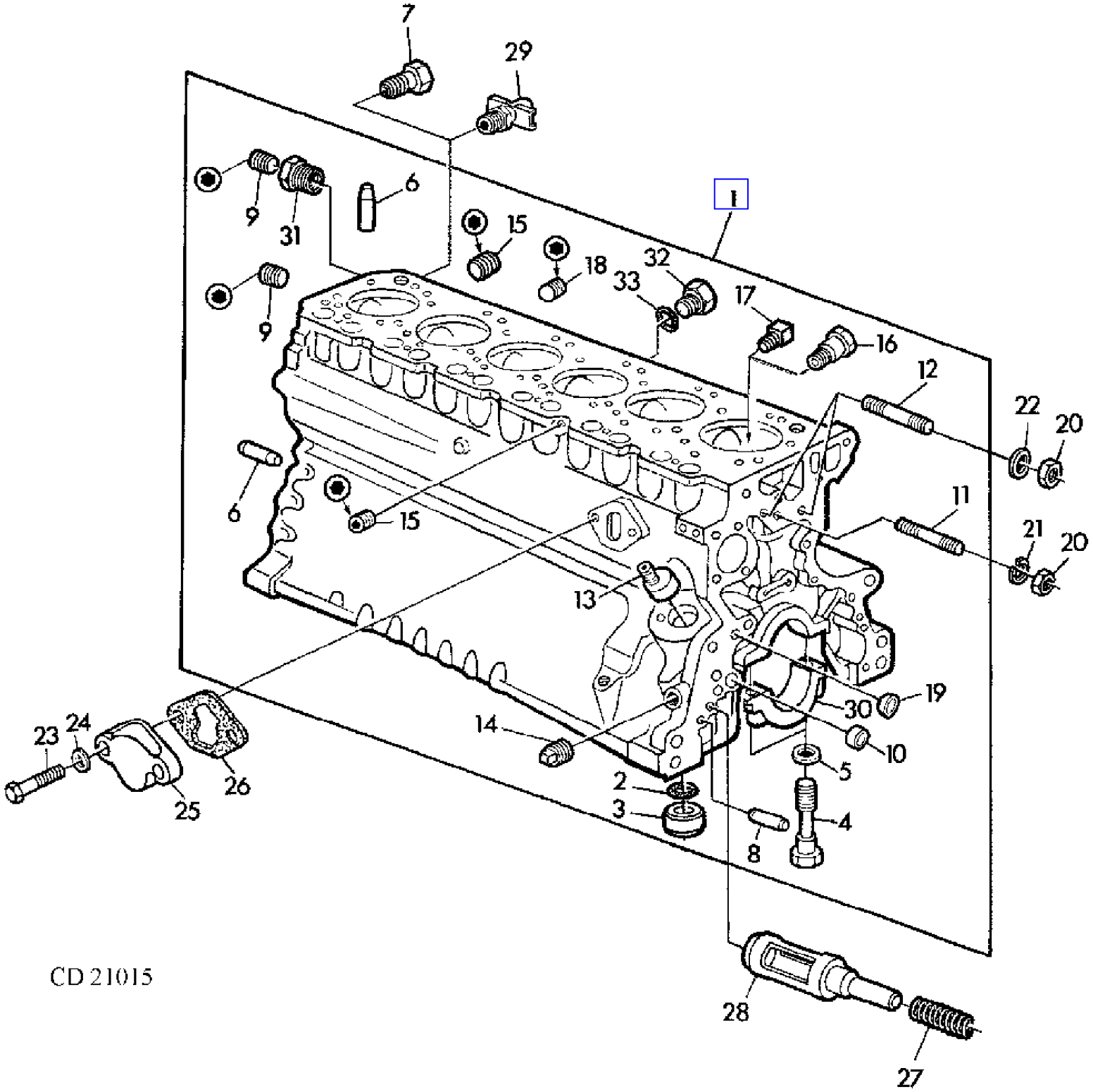

COPYRIGHT©1994 - 2008 DEERE & COMPANY Moline, Illinois All rights reserved

(PC4146) 955 Combine

(1A17) CYLINDER BLOCK
BLOC-CYLINDRES
ZYLINDERBLOCK
BLOCCO CILINDRI
BLOQUE DE CILINDROS
CYLINDERBLOCK

KEY	PART NO.	PART NAME	QTY	ENGINE SERIAL NO.			955	REMARKS
1	AR93792	CYLINDER BLOCK	1		-	377809	X	ASSY (ORD RE19872, R46625, R73139, R73140, 15H616, 15H665) (SUB FOR AR67683)
	AR97274	CYLINDER BLOCK	1		-	377809	X	ASSY (ORD RE19872, 15H616, 15H665)
	RE19872	CYLINDER BLOCK	AR		-	377809	X	ASSY (ORD 15H616, 15H665)
	AR93793	CYLINDER BLOCK	1	377810	-	465212	X	ASSY (MARKED R70348) (ORD RE25591, R46625, R73139, R73140, (26) R85363) (SUB FOR AR82293)
	RE25591	CYLINDER BLOCK	AR	377810	-		X	ASSY (MARKED R80725)
	AR102254	CYLINDER BLOCK	1	465213	-		X	ASSY (MARKED R75891) (ORD RE25591, (26) R85363) (SUB FOR AR97275)
2	R75892	O-RING	1	571540	-		X	
3	R75893	FITTING	1	571540	-		X	
4	T23474	CAP SCREW	14				X	1/2"
5	T20168	WASHER	14				X	
6	A120R	DOWEL PIN	2				X	LOW
	A120R	DOWEL PIN	2				X	UP (SUB FOR R26241)
7	R55233	PIPE PLUG	1				X	1/4"
8	A4879R	DOWEL PIN	2				X	
9	15H665	PIPE PLUG	1				X	3/4"
10	R26493	BUSHING	1				X	
11	T33279	STUD	2				X	3/8"
12	T25701	STUD	1				X	3/8"
13	T23435	THREADED NIPPLE	1				X	
14	15H255	PIPE PLUG	1				X	3/8"
15	15H624	PIPE PLUG	2				X	1/2" (FOR RE25591)
	15H624	PIPE PLUG	1				X	1/2", UP, RH (FOR AR102254)
16	R54802	ORIFICE	6				X	
17	22H932	SET SCREW	AR				X	
18	15H275	PIPE PLUG	1				X	1/4"
19	T18891	CAP	2		-	465212	X	
	T18891	CAP	1	465213	-		X	
20	14H812	NUT	3				X	3/8"
21	24H1303	WASHER	2				X	13/32"X11/16"X.060"
22	12H304	LOCK WASHER	1				X	3/8"
23	19H1849	CAP SCREW	2	377810	-		X	5/16"X1-1/4"
24	R20498	WASHER	2	377810	-		X	5/16"
25	R27286	COVER	1	377810	-		X	
26	R27285	GASKET	1	377810	-		X	
27	R46625	SPRING	1	465213	-		X	(FOR AR102254, AR97274)
28	R73139	VALVE	1	465213	-		X	(FOR AR102254, AR97274)
29	AT13740	DRAIN VALVE	1				X	1/4"
30	R65215	BEARING CAP	AR				X	(SUB FOR AR82294, T23670, T23671)
	R79089	CAP	AR				X	REAR (SUB FOR AR82295, T23670, T23671)
31	15H616	PIPE BUSHING	AR		-	377809	X	1"X3/4" (FOR RE19872, RE19873)
32	R39741	DRAIN PLUG	1				X	(FOR RE25591)
33	U13639	O-RING	1				X	(FOR RE25591)

COPYRIGHT©1994 - 2008 DEERE & COMPANY Moline, Illinois All rights reserved

(1A17) CYLINDER BLOCK
BLOC-CYLINDRES
ZYLINDERBLOCK
BLOCCO CILINDRI
BLOQUE DE CILINDROS
CYLINDERBLOCK

KEY	PART NO.	PART NAME	QTY	ENGINE SERIAL NO.	9 5 5	REMARKS

COPYRIGHT©1994 - 2008 DEERE & COMPANY Moline, Illinois All rights reserved

(1A19) CYLINDER BLOCK
BLOC-CYLINDRES
ZYLINDERBLOCK
BLOCCO CILINDRI
BLOQUE DE CILINDROS
CYLINDERBLOCK

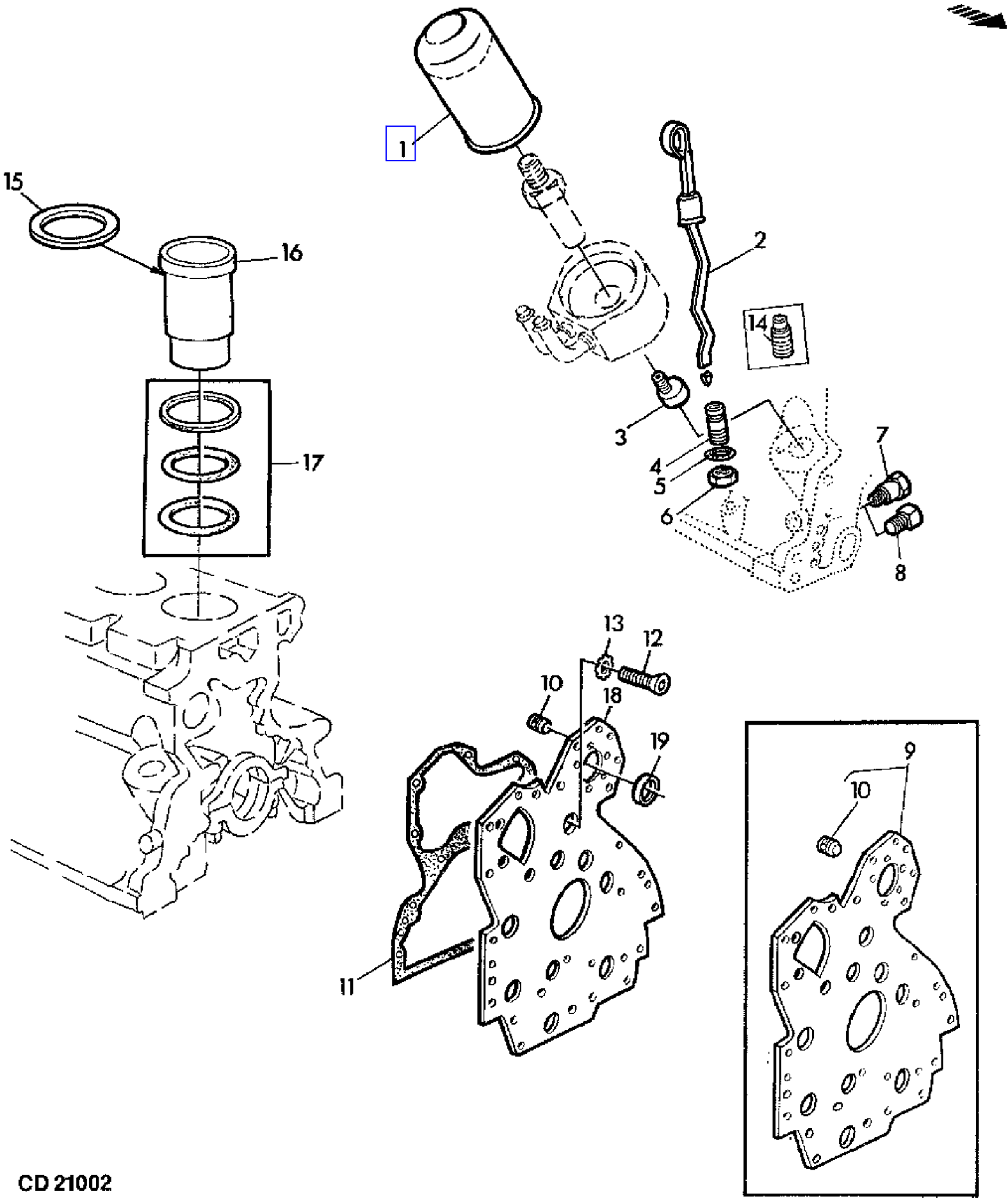

COPYRIGHT©1994 - 2008 DEERE & COMPANY Moline, Illinois All rights reserved

(PC4146) 955 Combine

(1A19) CYLINDER BLOCK
BLOC-CYLINDRES
ZYLINDERBLOCK
BLOCCO CILINDRI
BLOQUE DE CILINDROS
CYLINDERBLOCK

KEY	PART NO.	PART NAME	QTY	ENGINE SERIAL NO.			955	REMARKS
1	T19044	OIL FILTER	1				X	
2	AT21535	DIPSTICK	1		-	281074	X	
	AT21534	DIPSTICK	1	281075	-		X	
3	.....	ADAPTER	1				X	(T23435)
4	R55302	THREADED NIPPLE	1				X	(W/ R80541)
	R55302	THREADED NIPPLE	1	175647	-	281074	X	(W/ T23220)
5	R10093	O-RING	1	175647	-		X	
6	14H826	NUT	1				X	1/2"
7	.....	PIPE PLUG	6				X	
8	.....	PIPE PLUG	AR				X	(22H932)
9	AT29928	PLATE	1		-	534845	X	(ORD (8) AT21191, (2) AT22919, R79854, R79863)
10	AT21191	SET SCREW	8				X	5/16"
	AT22919	SET SCREW	2				X	3/8"
11	R73140	GASKET	1				X	(SUB FOR T24965)
12	T20166	SCREW	5				X	
13	12H324	WASHER	5				X	3/8"
14	T24476	THREADED NIPPLE	1		-	175646	X	(ORD R55302 W/ R10093)
15	CD15465	SHIM	AR		-	377809	X	TK = 0,05 MM 0.002"
	R46906	SHIM	AR		-	377809	X	TK = 0,1 MM 0.004"
	CD15466	SHIM	AR	377810	-		X	TK = 0,05 MM 0.002"
	R65833	SHIM	AR	377810	-		X	TK = 0,1 MM 0.004"
16	T32343	CYLINDER LINER	6		-	377809	X	
	R80724	CYLINDER LINER	6	377810	-		X	(SUB FOR R51726)
17	AR71618	KIT	6		-	377809	X	KIT,(3) INCL (1) PA (2) O-RING (SUB FOR AT31610, DD13276, R48768)
	AR65507	O-RING KIT	6	377810	-		X	KIT,(3) INCL (1) PA (2) O-RING (SUB FOR DD13277)
18	R79863	PLATE	1	534846	-		X	(ORD W/ (8) AT21191, (2) AT22919) (SUB FOR R75470)
19	R79854	WASHER	1		-	534845	X	

COPYRIGHT©1994 - 2008 DEERE & COMPANY Moline, Illinois All rights reserved

(1A21) CYLINDER HEAD/ROCKER ARM COVER
CULASSE/COUVERCLE DE CULBUTEURS
ZYLINDERKOPF/ZYLINDERKOPFHAUBE
TESTA CLLINDRI/COPERCHIO PUNTERIE
CULATA/TAPA DE BALANCINES
CYLINDERTOPP/VENTILKAPA

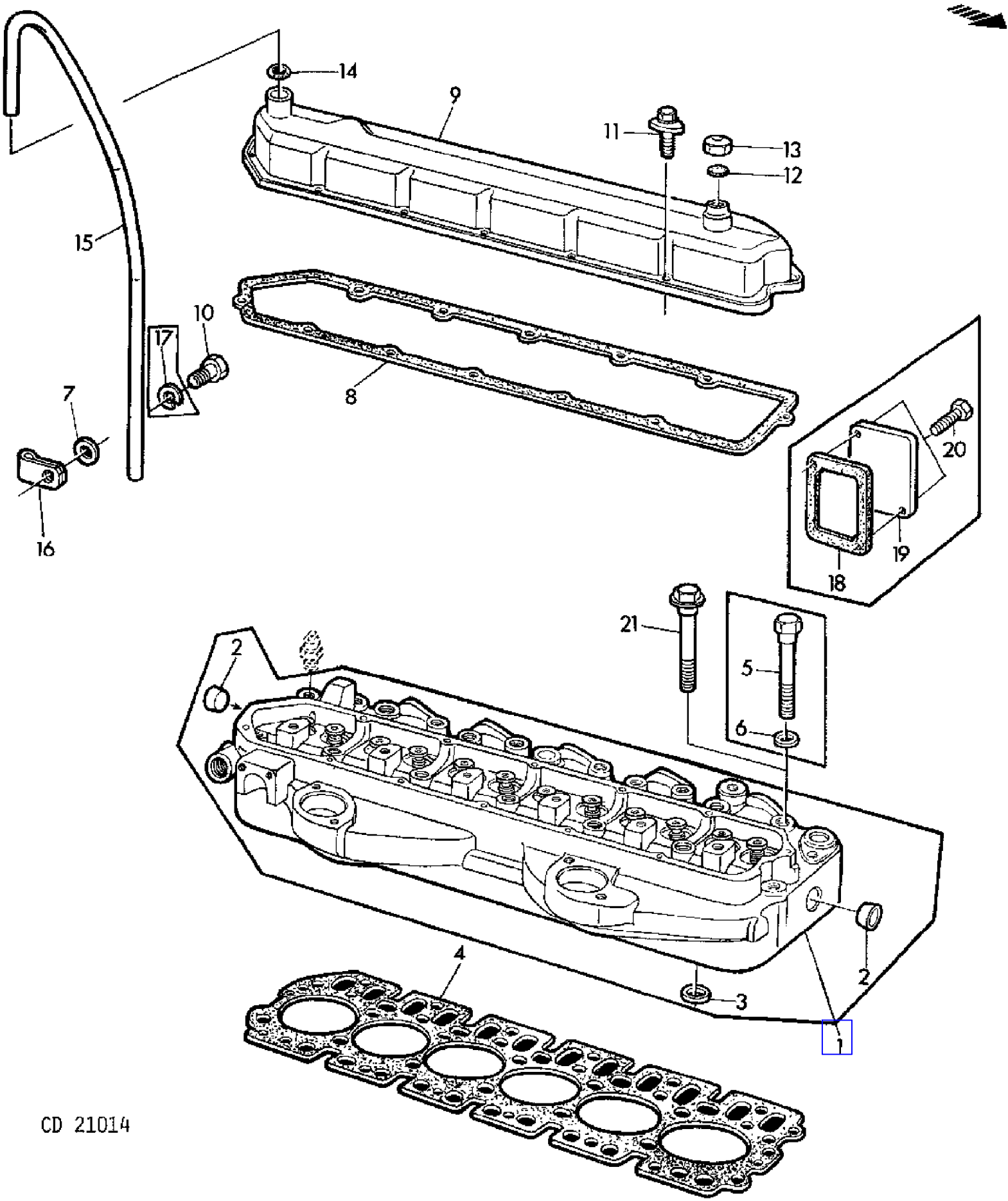

COPYRIGHT©1994 - 2008 DEERE & COMPANY Moline, Illinois All rights reserved

(1A21) CYLINDER HEAD/ROCKER ARM COVER
CULASSE/COUVERCLE DE CULBUTEURS
ZYLINDERKOPF/ZYLINDERKOPFHAUBE
TESTA CLLINDRI/COPERCHIO PUNTERIE
CULATA/TAPA DE BALANCINES
CYLINDERTOPP/VENTILKAPA

KEY	PART NO.	PART NAME	QTY	ENGINE SERIAL NO.			955	REMARKS
1	AR78607	CYLINDER HEAD	1		-	235169	X	ASSY (SUB FOR AR70585)
	AR76241	CYLINDER HEAD	1	235170	-		X	ASSY (SUB FOR AR76289)
2	A3910R	CAP	2				X	OD = 25,4 MM 1"
	CD16284	CAP	AR				X	OD = 32,4 MM 1.27"
3	CD13979	VALVE SEAT INSERT	6				X	(W/ AR76241, AR78607)
4	R80243	ENGINE CYLINDER HEAD GASKET	1				X	(SUB FOR R59449)
5	R53223	CAP SCREW	23		-	235169	X	12,7MMX108MM 0.5"X4.25"
	R53219	CAP SCREW	3		-	235169	X	12.7MMX127MM 0.5"X5"
	R53223	CAP SCREW	26	235170	-	377809	X	12,7MMX108MM 0.5"X4.25"
	T20182	CAP SCREW	26	377810	-		X	12,7MMX114MM 0.5X4.5" (FOR RE25569, RE25591) (ORD (26) R85363)
6	T20168	WASHER	26				X	(FOR R53223, T20182)
7	24H1685	WASHER	1	234511	-		X	11/32"X3/4"X.075" (SUB FOR 12H303)
8	R68228	GASKET	1		-	583852	X	(ORD R75728 W/ (12) AR100124)
	R75728	GASKET	1	583853	-		X	
9	AR84958	VALVE COVER	1				X	(SUB FOR AT18188)
10	19H2284	CAP SCREW	1		-	234510	X	3/8"X7/8"
	19H1813	CAP SCREW	1	234511	-		X	5/16"X5/8"
11	AR100124	SCREW, WITH WASHER	12				X	(SUB FOR AR45530)
12	T20328	GASKET	1				X	
13	R90788	PLUG	1				X	(SUB FOR T20294)
14	R56463	O-RING	1				X	(SUB FOR R495R APPL)
15	T20074	TUBE	1				X	(SUB FOR T23414)
16	T24930	CLAMP	1		-	234510	X	
	R40791	CLAMP	1	234511	-		X	
17	12M7013	LOCK WASHER	1		-	234510	X	10MM
18	R54641	GASKET	1		-	235169	X	
19	R56725	COVER	1		-	235169	X	
20	19H1936	CAP SCREW	2		-	235169	X	3/8"X3/4"
21	R85363	CAP SCREW	AR	377810	-		X	12,7MMX112MM 0.5X4.41"

COPYRIGHT©1994 - 2008 DEERE & COMPANY Moline, Illinois All rights reserved

(4A23) CYLINDER-CHAIN DRIVE
ENTRAINEMENT CHAINE DU BATTEUR
DRESCHTROMMEL-KETTENANTRIEB
COMANDO BATTITORE A CATENA
TRANSMISION DEL CILINDRO DESGRANADOR POR CADENA
CYLINDERDRIVNING(KEDJA)

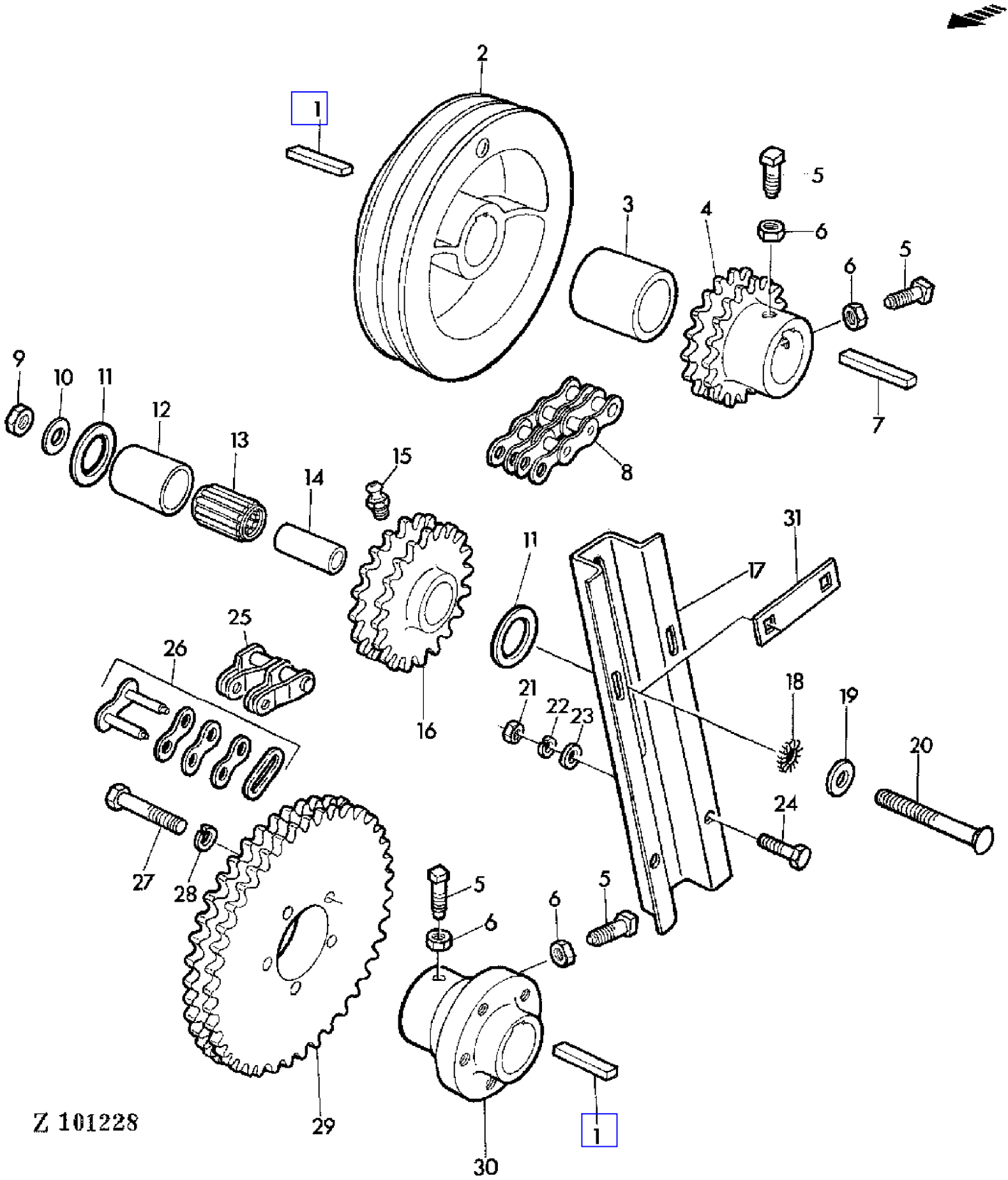

COPYRIGHT©1994 - 2008 DEERE & COMPANY Moline, Illinois All rights reserved

(4A23) CYLINDER-CHAIN DRIVE
ENTRAINEMENT CHAINE DU BATTEUR
DRESCHTROMMEL-KETTENANTRIEB
COMANDO BATTITORE A CATENA
TRANSMISION DEL CILINDRO DESGRANADOR POR CADENA
CYLINDERDRIVNING(KEDJA)

KEY	PART NO.	PART NAME	QTY	SERIAL NO.	955	REMARKS
1	49M7014	SHAFT KEY	2		X	12X8X50MM
2	Z10739	SHEAVE	1		X	
3	Z31875	SPACER	1		X	
4	Z30803	CHAIN SPROCKET	1		X	Z = 17
	Z30818	CHAIN SPROCKET	1		X	Z = 24
5	Z32434	SET SCREW	4		X	
6	14M7031	NUT	4		X	M12
7	49M7015	SHAFT KEY	1		X	12X8X70MM
8	AZ26700	LINK CHAIN	1		X	L = 16, INCL KEY 26
	AZ18000	LINK CHAIN	1		X	L = 107, ASSY, INCL KEYS 25,26
9	14M7168	LOCK NUT	1		X	M12
10	24M7114	WASHER	1		X	19MM
11	24H1353	WASHER	1		X	9/16"X2-1/4"
12	JD7455	BEARING RACE	1		X	
13	JD7911	ROLLER BEARING	1		X	
14	Z23784	BUSHING	1		X	
15	JD7759	LUBRICATION FITTING	1		X	
16	PK860H	CHAIN SPROCKET	1		X	
17	Z32551	HOLDER	1		X	
18	12M7054	LOCK WASHER	1		X	18MM
19	24M7049	WASHER	1		X	18MM
20	03M7112	BOLT	1		X	M12X100
21	14M7029	NUT	4		X	M8
22	12M7008	LOCK WASHER	4		X	8MM
23	24M7036	WASHER	4		X	9MM
24	19M7376	CAP SCREW	4		X	M8X20
25	AL15955	LINK	1		X	
26	AL15956	LINK	1		X	
27	19M7389	CAP SCREW	5		X	M12X60
28	12M7014	LOCK WASHER	5		X	12MM
29	H28678	CHAIN SPROCKET	1		X	Z = 42
	H30767	CHAIN SPROCKET	1		X	Z = 48
	H28679	CHAIN SPROCKET	1		X	Z = 59
	Z10589	CHAIN SPROCKET	1		X	Z = 76
	Z11149	CHAIN SPROCKET	1		X	Z = 96
30	Z10742	HUB	1		X	
31	Z22034	STRAP	1		X	

COPYRIGHT©1994 - 2008 DEERE & COMPANY Moline, Illinois All rights reserved

(1B04) CYLINDERLINER AND PISTON KIT
CHEMISE ET PISTON-JEU DE REPARATION
ZYLINDERBUECHSE UND KOLBEN-REPARATURSATZ
GRUPPO CAMICCIA E PISTONE
CAMISAS Y PISTONES-JUEGO DE REPARACION
CYLINDERFODER OCH KOLV/ENHET

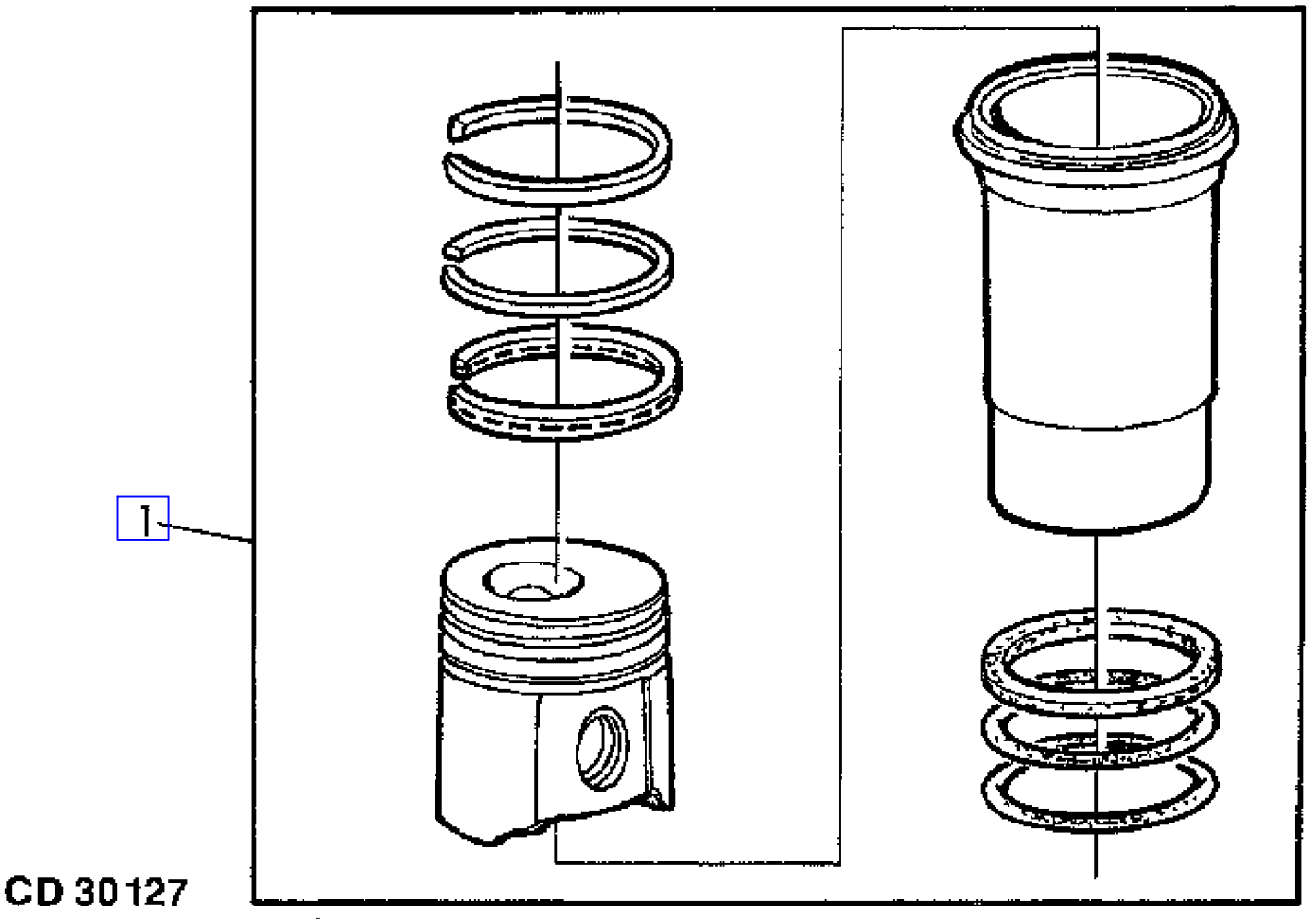

COPYRIGHT©1994 - 2008 DEERE & COMPANY Moline, Illinois All rights reserved

(1B04) CYLINDERLINER AND PISTON KIT
CHEMISE ET PISTON-JEU DE REPARATION
ZYLINDERBUECHSE UND KOLBEN-REPARATURSATZ
GRUPPO CAMICCIA E PISTONE
CAMISAS Y PISTONES-JUEGO DE REPARACION
CYLINDERFODER OCH KOLV/ENHET

KEY	PART NO.	PART NAME	QTY	ENGINE SERIAL NO.		955	REMARKS
1	RE24458	PISTON-LINER KIT	AR	377810	-	X	(MARKED"B") (SUB FOR AR79868, RE11509, RE11515, RE18694)
	RE24539	PISTON-LINER KIT	AR	377810	-	X	(MARKED"H") (SUB FOR AR87738, RE11510, RE11516, RE18697)

COPYRIGHT©1994 - 2008 DEERE & COMPANY Moline, Illinois All rights reserved

(1F04) DASH PANEL
TABLEAU DE BORD
ARMATURENKASTEN
CRUSCOTTO
TABLERO DE INSTRUMENTOS
INSTRUMENTPANEL

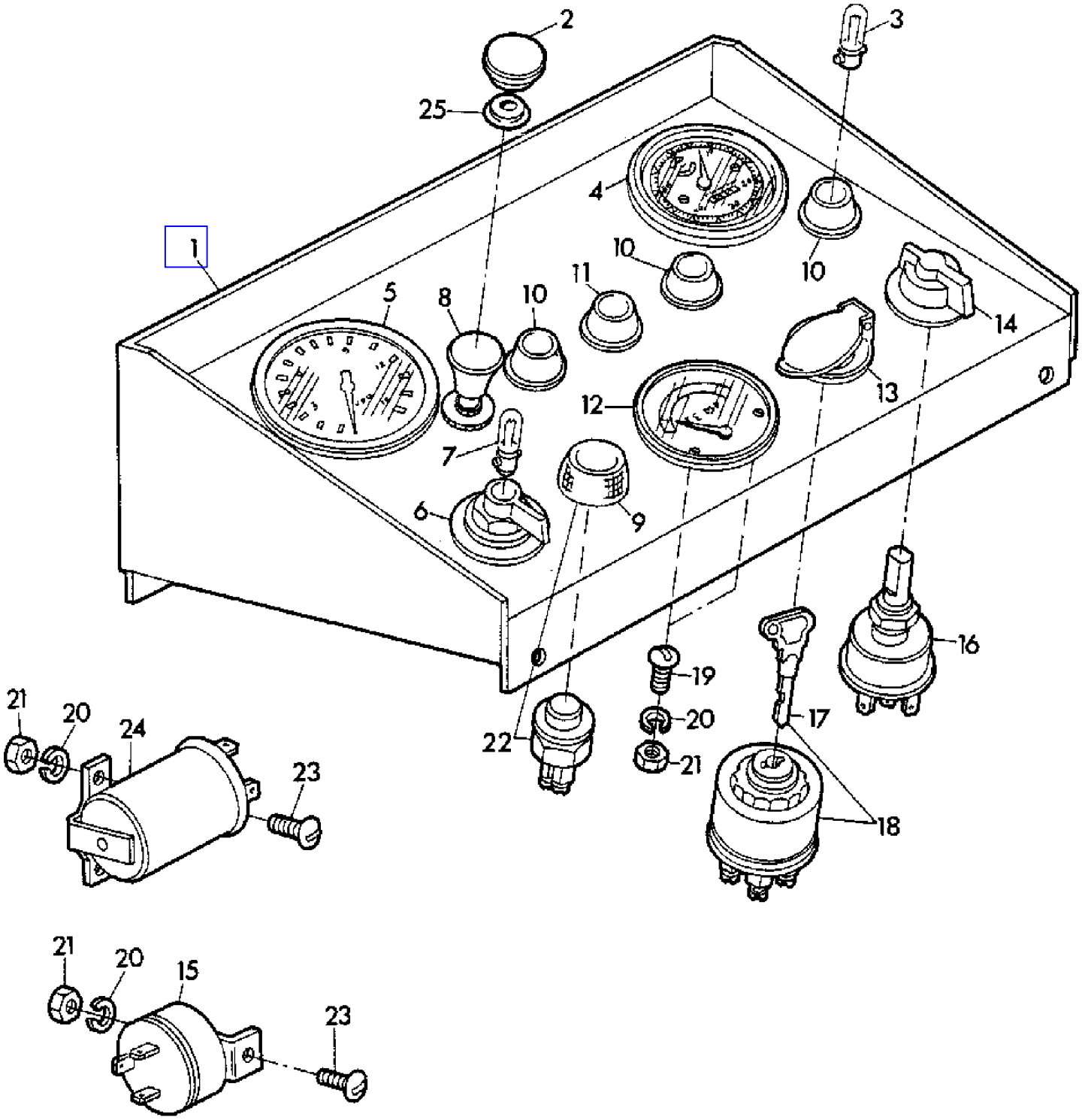

COPYRIGHT©1994 - 2008 DEERE & COMPANY Moline, Illinois All rights reserved

(1F04) DASH PANEL
TABLEAU DE BORD
ARMATURENKASTEN
CRUSCOTTO
TABLERO DE INSTRUMENTOS
INSTRUMENTPANEL

KEY	PART NO.	PART NAME	QTY	SERIAL NO.	955	REMARKS
1	AZ23616	INSTRUMENT PANEL	1		X	
2	Z30235	COVER	1		X	
3	57M6277	BULB	AR		X	H 12V 2W
4	AZ27640	HOUR METER	1		X	ASSY (SUB FOR AZ17023)
5	AZ23047	TACHOMETER	1		X	ASSY
6	Z22806	SWITCH	1		X	
7	57M6343	BULB	1		X	J 12V 2W
8	AZ21185	SWITCH	1		X	ASSY
9	Z25724	CAP	2		X	
10	AZ19064	INDICATOR LIGHT	1		X	ASSY
11	AZ19063	INDICATOR LIGHT	1		X	ASSY
12	AL24526	TEMPERATURE GAUGE	1		X	(SUB FOR AZ23585)
13	AZ34956	TERMINAL NIPPLE	1		X	(SUB FOR Z21984)
14	L30655	KNOB	1		X	
15	Z21989	FLASHER	1		X	(B)
16	AL25064	SWITCH	1		X	
17	Z32296	KEY	1		X	
18	AZ21092	SWITCH	1		X	ASSY, INCL KEY 17
19	21M7142	SCREW	AR		X	M5X25
20	12M7011	LOCK WASHER	AR		X	5MM
21	14M7028	NUT	AR		X	M5
22	AZ29697	SWITCH	1		X	INCL KEY 9 (SUB FOR AZ14727)
23	21M7140	SCREW	2		X	M5X10
24	AZ23051	FLASHER	1		X	(A)
25	Z36001	CAP	1		X	

(A) DIRECTION INDICATOR
INDICATEUR DE DIRECTION
FAHRTRICHTUNGSANZEIGER
INDICATORI DI DIREZIONE
INDICADOR DEL SENTIDO DE LA MARCHA
KORRIKTNINGSBLINKERS

(B) HANDBRAKE
FREIN A MAIN
HANDBREMSE
FRENO A MANO
FRENO DE MANO
HANDBROMS

COPYRIGHT©1994 - 2008 DEERE & COMPANY Moline, Illinois All rights reserved

(2G20) DECALCOMANIAS
DECALCOMANIES
ABSCHIEBEBILDER
DECALCOMANIE
CALCOMANIAS
DEKALER

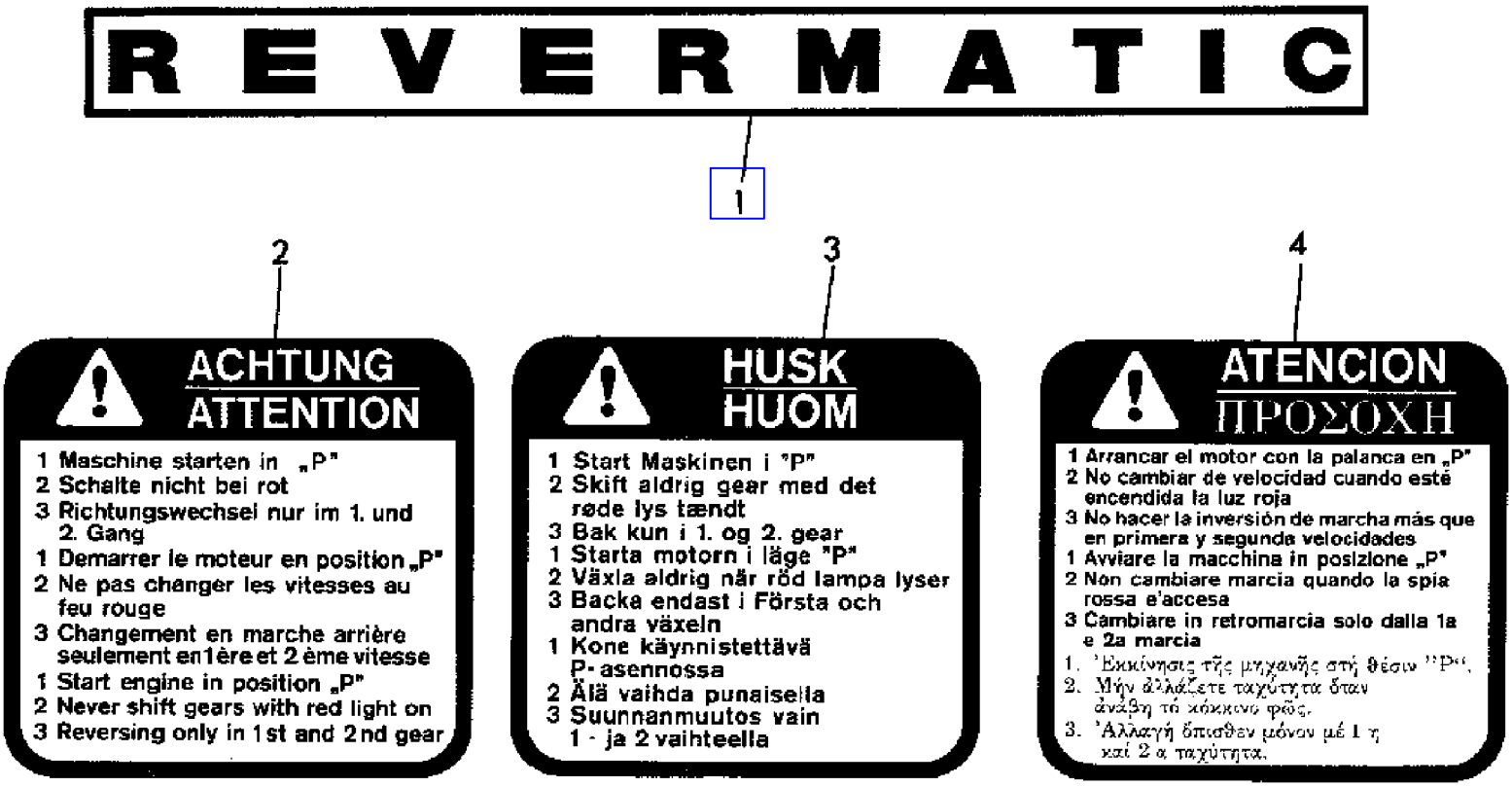

5

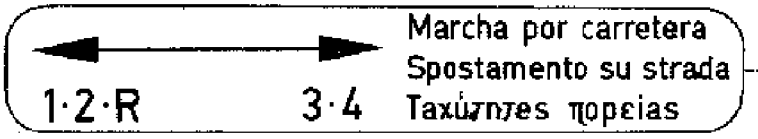

6

7

8

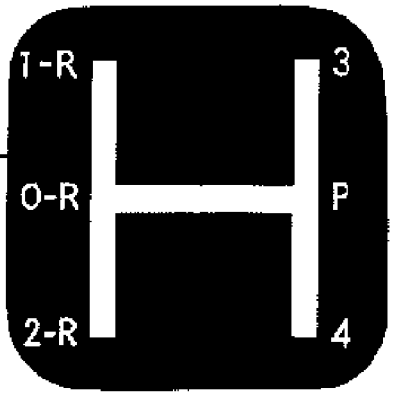

Z 27791

COPYRIGHT©1994 - 2008 DEERE & COMPANY Moline, Illinois All rights reserved

(2G20) DECALCOMANIAS
DECALCOMANIES
ABSCHIEBEBILDER
DECALCOMANIE
CALCOMANIAS
DEKALER

KEY	PART NO.	PART NAME	QTY	SERIAL NO.	955	REMARKS
1	Z34423	DECAL	1		X	
2	Z31952	DECAL	1		X	
3	Z31966	DECAL	1		X	
4	Z31967	DECAL	1		X	
5	Z31951	DECAL	1		X	
6	Z31965	DECAL	1		X	
7	Z31964	DECAL	1		X	
8	Z30708	DECAL	1		X	

COPYRIGHT©1994 - 2008 DEERE & COMPANY Moline, Illinois All rights reserved

(2G06) DECALS
DECALCOMANIES
ABSCHIEBEBILDER
DECALCOMANIE
CALCOMANIAS
DEKALER

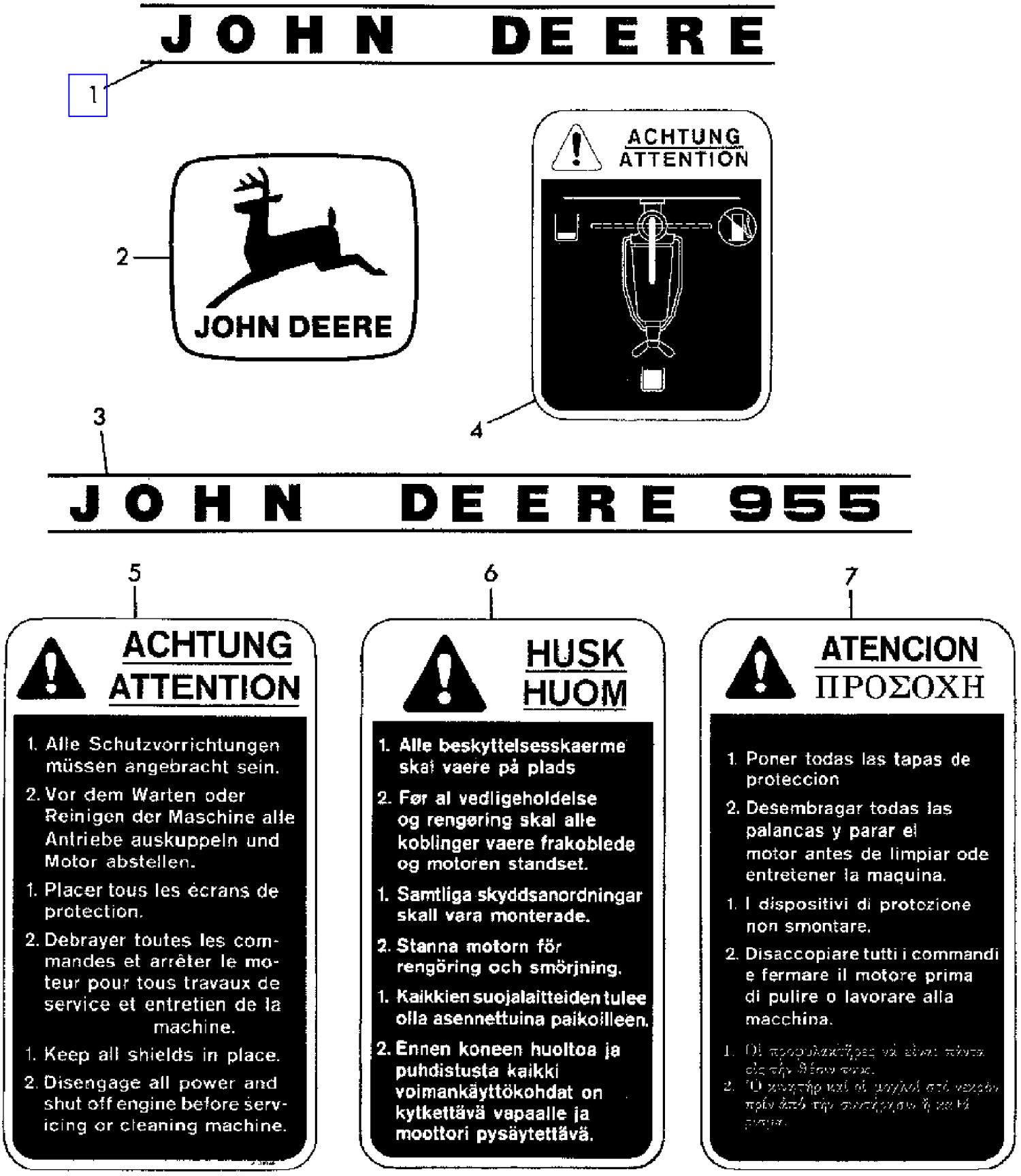

Z 104671

COPYRIGHT©1994 - 2008 DEERE & COMPANY Moline, Illinois All rights reserved

(PC4146) 955 Combine

(2G06) DECALS
DECALCOMANIES
ABSCHIEBEBILDER
DECALCOMANIE
CALCOMANIAS
DEKALER

KEY	PART NO.	PART NAME	QTY	SERIAL NO.	955	REMARKS
1	Z32366	DECAL	2		X	
2	JD5299	DECAL	1		X	FRONT
3	Z41862	DECAL	2		X	(SUB FOR Z35054)
4	Z32708	DECAL	1	- 008281	X	
5	Z31048	DECAL	1		X	
6	Z31046	DECAL	1		X	
7	Z31045	DECAL	1		X	

COPYRIGHT©1994 - 2008 DEERE & COMPANY Moline, Illinois All rights reserved

(2G08) DECALS
DECALCOMANIES
ABSCHIEBEBILDER
DECALCOMANIE
CALCOMANIAS
DEKALER

ACHTUNG! ATTENTION!

Radschrauben fest anziehen
serrer les vis de roue
keep wheel bolts tight
(42 mkp) 420 Nm (304 ft.lb)

1

HUSK HUOM

Hjulboltene spændes godt til
Håll hjulbultarna åtdragna till
Pyörien ruuvit kiristettävä hyvin
(42 mkp) 420 Nm (304 ft.lb)

2

ATENCION ΠΡΟΣΟΧΗ

Apretar bien los pernos de la rueda
Tenere i bulloni delle ruote ben serrati
Σφίξτε τά μπουλόνια τῶν τροχῶν
(42 mkp) 420 Nm (42 χιλιογραμμόμετρα)

3

HUSK HUOM

Advarsel. Pas på de roterende knive.
Varning för roterande knivar.
Varo pyöriviä teriä.

4

HUSK HUOM

Hjulboltene spændes godt til
Håll hjulbultarna åtdragna till
Pyörien ruuvit kiristettävä hyvin
20 kpm 200 Nm

5

ACHTUNG ATTENTION

Schutzvorrichtungen nicht entfernen
Bei laufender Maschine nicht in den Korntank greifen
Bei Körnerstau im Korntank Stößel benutzen
Ne pas enlever le garant de sécurite
Lorsque la machine travaille, ne pas toucher dans la tremie
En cas de mauvais écoulement utiliser un bâton
Keep shield in place
Do not get into the grain tank when engine is running

8

7

HUSK HUOM

1 Fjern ikke beskyttelsesskærmene
2 Stik aldrig armene ned i korntanken når maskinen arbejder
1 Avmontera inte skyddet
2 Stick inte ner handen i spannmålstanken när tröskan är igång
1 Suojalaitetta ei saa poistaa
2 Koneen käydessä viljasäiliöön ei saa työntää kättä

6

ATENCION ΠΡΟΣΟΧΗ

1 No quitar la proteccion
2 No meter la mano en el tanque de grano con la cosechadora en funcionamiento
1 Non tagliere le protezioni
2 Non mettere le mani nel serbatoio del grano quando la macchina e in moto
1 Μήν ἀφαιρεῖτε τό προστατευτικὸ κάλυμμα
2 Μήν δάζετε τό χέρι σας μέσα στήν ἀποδήκη ὅταν λειτουργή ἡ μηχανή

Z 104672

COPYRIGHT©1994 - 2008 DEERE & COMPANY Moline, Illinois All rights reserved

(2G08) DECALS
DECALCOMANIES
ABSCHIEBEBILDER
DECALCOMANIE
CALCOMANIAS
DEKALER

KEY	PART NO.	PART NAME	QTY	SERIAL NO.	955	REMARKS
1	Z34656	DECAL	1		X	
2	Z34655	DECAL	1		X	
3	Z34654	DECAL	1		X	
4	Z33120	DECAL	1		X	
5	Z33121	DECAL	1		X	
6	Z31971	DECAL	1		X	
7	Z31970	DECAL	1		X	
8	Z42137	DECAL	1		X	(SUB FOR Z33714)

COPYRIGHT©1994 - 2008 DEERE & COMPANY Moline, Illinois All rights reserved

(2G10) DECALS
DECALCOMANIES
ABSCHIEBEBILDER
DECALCOMANIE
CALCOMANIAS
DEKALER

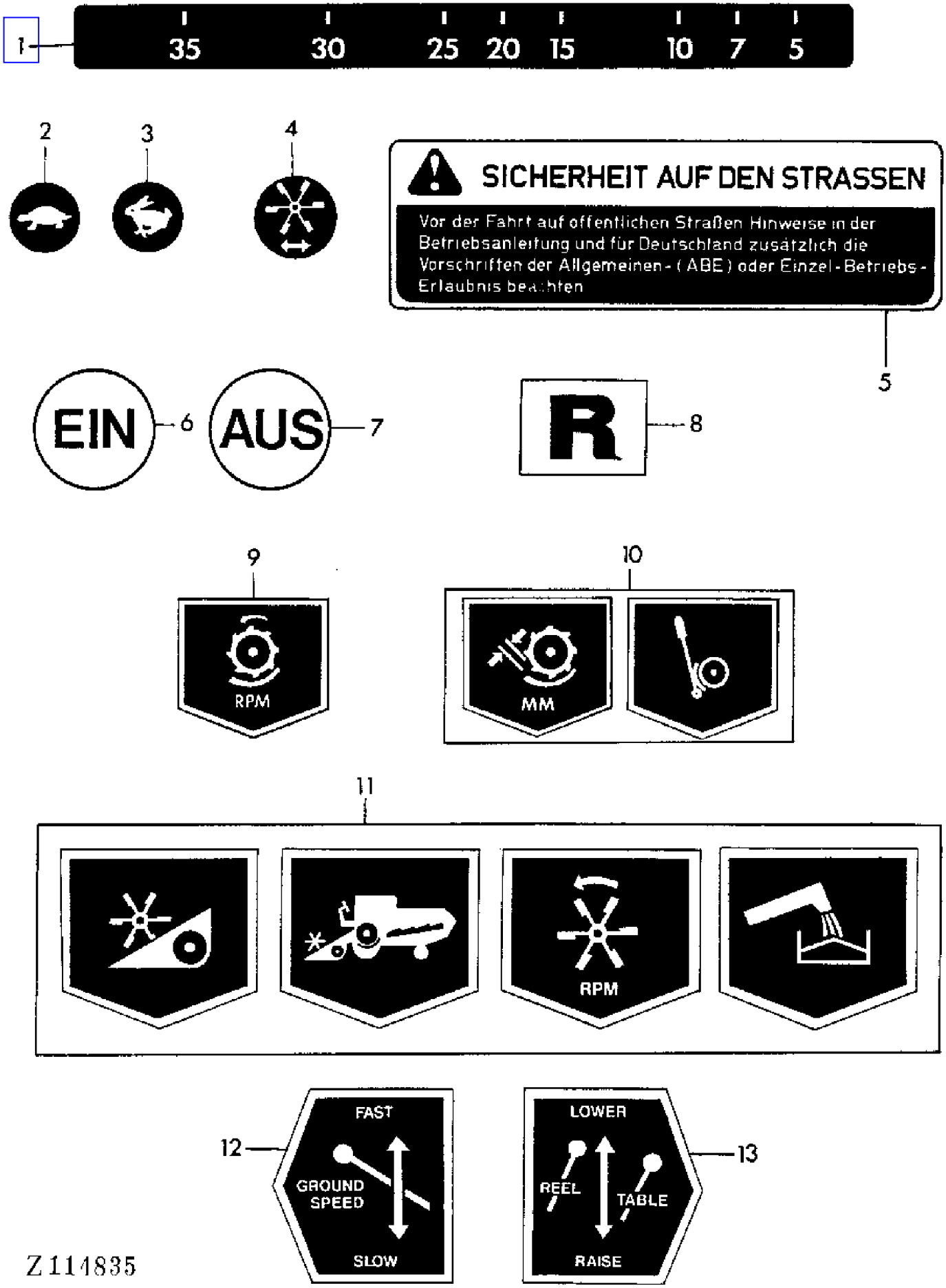

COPYRIGHT©1994 - 2008 DEERE & COMPANY Moline, Illinois All rights reserved

(2G10) DECALS
DECALCOMANIES
ABSCHIEBEBILDER
DECALCOMANIE
CALCOMANIAS
DEKALER

KEY	PART NO.	PART NAME	QTY	SERIAL NO.	955	REMARKS
1	Z39150	DECAL	1		X	(SUB FOR Z22161)
2	Z22159	DECAL	1		X	
3	Z22160	DECAL	1		X	
4	Z31207	DECAL	AR		X	
5	Z51741	DECAL	1		X	(SUB FOR Z36103)
6	Z35910	DECAL	2		X	
7	Z35911	DECAL	2		X	
8	Z32372	DECAL	2		X	
9	Z30757	DECAL	1		X	
10	Z30758	DECAL	1		X	
11	Z22163	DECAL	1		X	
12	Z22625	DECAL	AR	- XXXX	X	
13	Z22624	DECAL	AR	- XXXX	X	

COPYRIGHT©1994 - 2008 DEERE & COMPANY Moline, Illinois All rights reserved

(2G12) DECALS
DECALCOMANIES
ABSCHIEBEBILDER
DECALCOMANIE
CALCOMANIAS
DEKALER

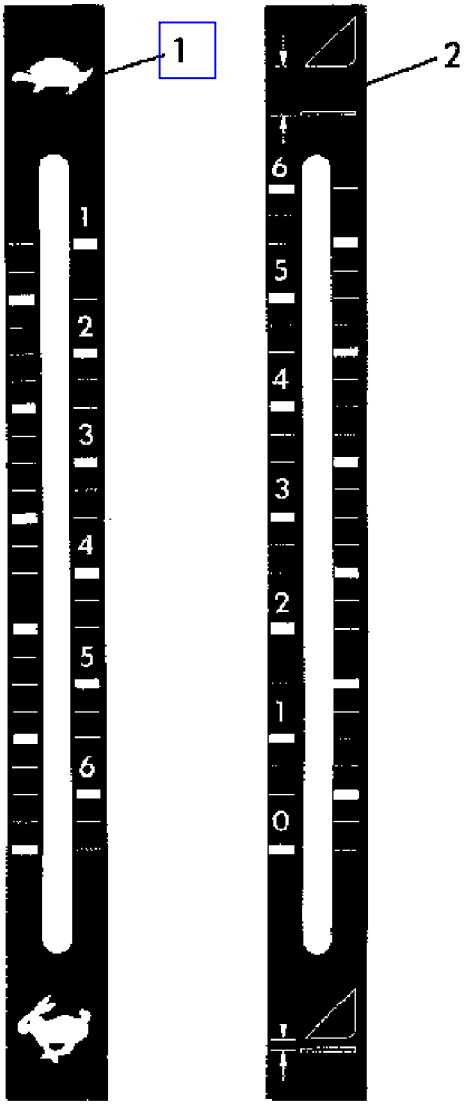

3
ACHTUNG ATTENTION
JOHN DEERE
HY-GARD OIL
JDM J20A

4
HUSK HUOM
JOHN DEERE
HY-GARD OIL
JDM J20A

5
ATENCION ΠΡΟΣΟΧΗ
JOHN DEERE
HY-GARD OIL
JDM J20A

6 IN

7 OUT

8

ACHTUNG-GEFAHR
ATTENTION-DANGER
Nicht bei laufendem Motor öffnen
Ne pas ouvrir lorsque le moteur tourne
Do not open while engine is running

9

Z 104674

COPYRIGHT©1994 - 2008 DEERE & COMPANY Moline, Illinois All rights reserved

(PC4146) 955 Combine

(2G12) DECALS
DECALCOMANIES
ABSCHIEBEBILDER
DECALCOMANIE
CALCOMANIAS
DEKALER

KEY	PART NO.	PART NAME	QTY	SERIAL NO.	955	REMARKS
1	Z30010	DECAL	1	- 016667	X	
2	Z30011	DECAL	1		X	
3	Z39053	DECAL	1		X	(SUB FOR Z31953)
4	Z39055	DECAL	1		X	(SUB FOR Z31968)
5	Z39054	DECAL	1		X	(SUB FOR Z31969)
6	Z32500	DECAL	2		X	
7	Z32501	DECAL	2		X	
8	Z42149	DECAL	AR		X	(A)
9	Z35150	DECAL	1		X	(SUB FOR Z33257)

(A) YELLOW
JAUNE
GELB
GIALLO
AMARILLO
GUL

COPYRIGHT©1994 - 2008 DEERE & COMPANY Moline, Illinois All rights reserved

(2G14) DECALS
DECALCOMANIES
ABSCHIEBEBILDER
DECALCOMANIE
CALCOMANIAS
DEKALER

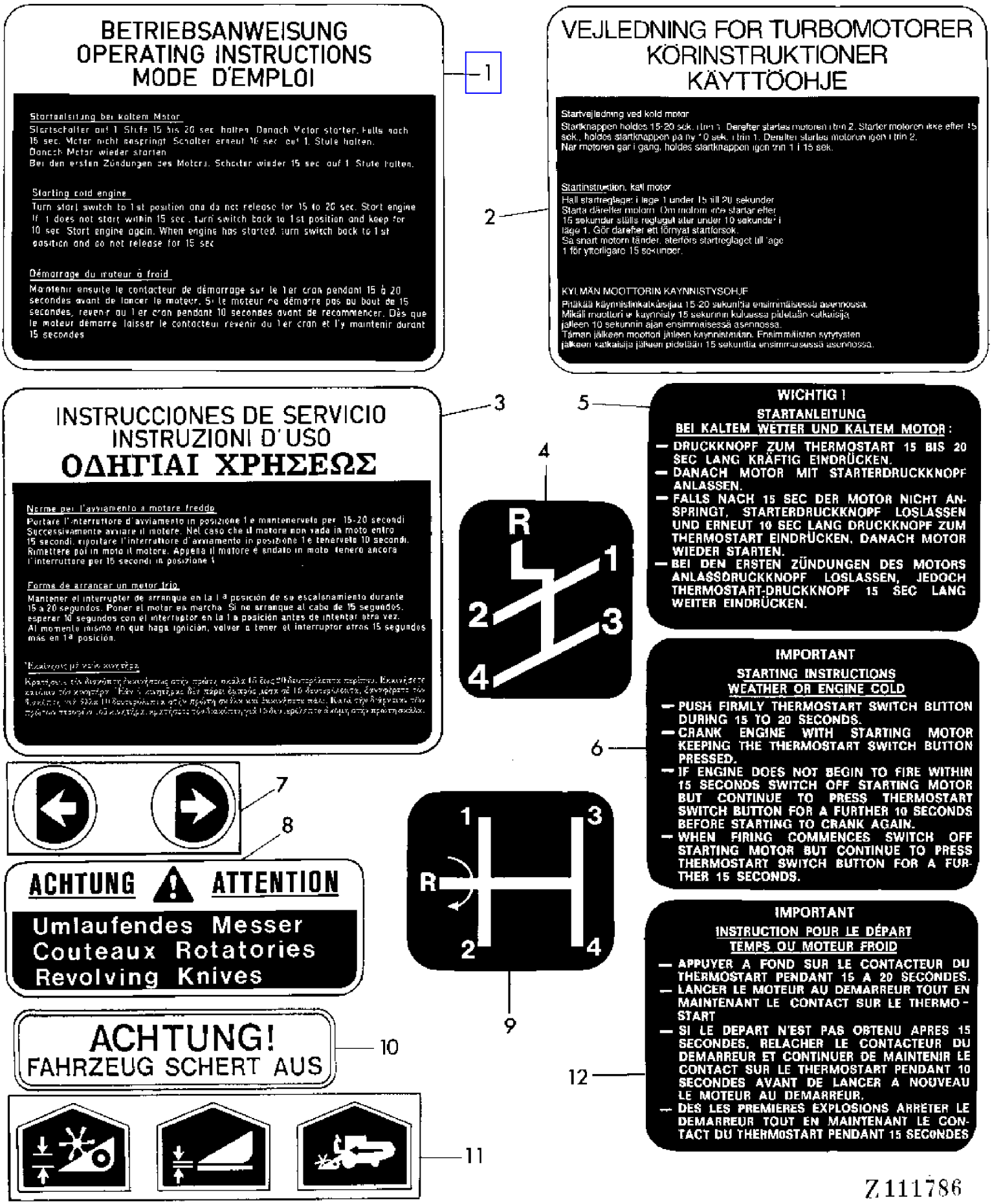

COPYRIGHT©1994 - 2008 DEERE & COMPANY Moline, Illinois All rights reserved

(2G14) DECALS
DECALCOMANIES
ABSCHIEBEBILDER
DECALCOMANIE
CALCOMANIAS
DEKALER

KEY	PART NO.	PART NAME	QTY	SERIAL NO.			955	REMARKS
1	Z34746	DECAL	1				X	
2	Z34747	DECAL	1				X	
3	Z34748	DECAL	1				X	
4	Z38529	DECAL	1	018098	-		X	
5	CD12933	LABEL	1				X	
6	CD12932	DECAL	1				X	
7	Z34812	DECAL	AR	XXXX	-		X	
8	Z35516	DECAL	1				X	
9	Z30696	DECAL	1				X	
	Z30696	DECAL	1		-	018097	X	
10	Z36357	DECAL	1				X	
11	Z36399	DECAL	AR	XXXX	-		X	
12	CD12931	DECAL	1				X	

COPYRIGHT©1994 - 2008 DEERE & COMPANY Moline, Illinois All rights reserved

(2G16) DECALS
DECALCOMANIES
ABSCHIEBEBILDER
DECALCOMANIE
CALCOMANIAS
DEKALER

1

2

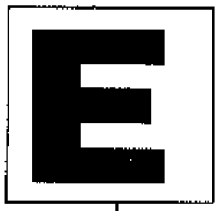

3

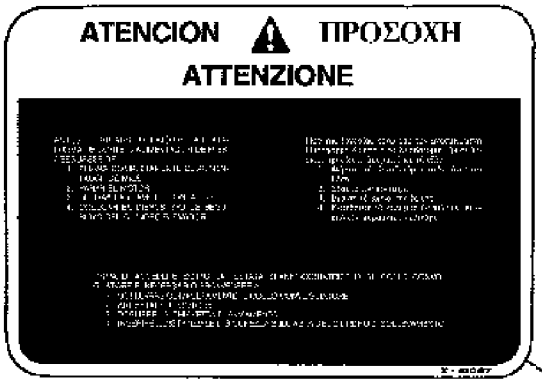

4

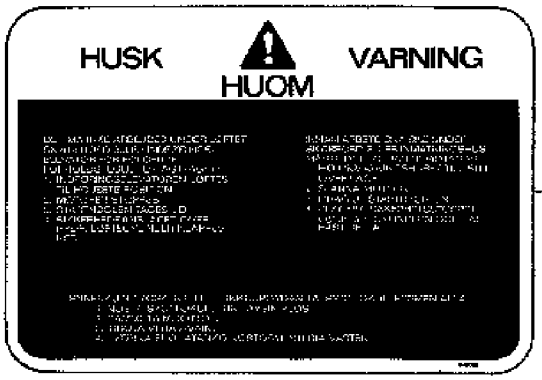

5

8

6

7

Z 104676

COPYRIGHT©1994 - 2008 DEERE & COMPANY Moline, Illinois All rights reserved

(PC4146) 955 Combine

(2G16) DECALS
DECALCOMANIES
ABSCHIEBEBILDER
DECALCOMANIE
CALCOMANIAS
DEKALER

KEY	PART NO.	PART NAME	QTY	SERIAL NO.	955	REMARKS
1	Z41066	DECAL	2		X	
2	Z41070	DECAL	1		X	
3	Z33139	DECAL	2		X	
4	Z41067	DECAL	2		X	
5	Z41068	DECAL	2		X	
6	Z33123	DECAL	1		X	
7	Z33119	DECAL	1		X	
8	Z41069	DECAL	1		X	

COPYRIGHT©1994 - 2008 DEERE & COMPANY Moline, Illinois All rights reserved

(2G18) DECALS
DECALCOMANIES
ABSCHIEBEBILDER
DECALCOMANIE
CALCOMANIAS
DEKALER

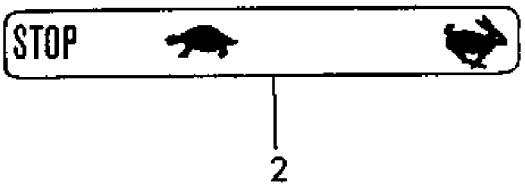

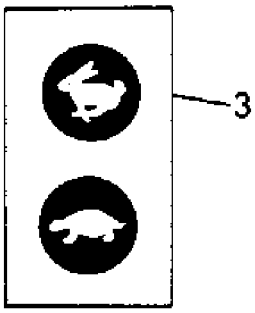

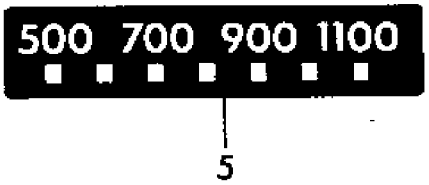

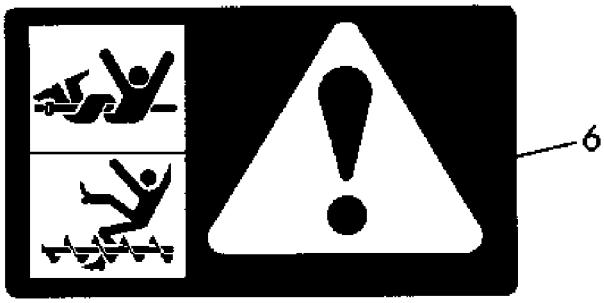

Z111131

COPYRIGHT©1994 - 2008 DEERE & COMPANY Moline, Illinois All rights reserved

(2G18) DECALS
DECALCOMANIES
ABSCHIEBEBILDER
DECALCOMANIE
CALCOMANIAS
DEKALER

KEY	PART NO.	PART NAME	QTY	SERIAL NO.	955	REMARKS
1	Z38273	DECAL	1		X	
2	Z31955	DECAL	1		X	
3	Z34811	DECAL	AR	XXXX -	X	
4	Z43493	DECAL	1		X	(SUB FOR Z22158)
5	Z32828	DECAL	1		X	
6	Z46439	LABEL	AR		X	

COPYRIGHT©1994 - 2008 DEERE & COMPANY Moline, Illinois All rights reserved

(1H02) DIFFERENTIAL
DIFFERENTIEL
DIFFERENTIAL
DIFFERENZIALE
DIFERENCIAL
DIFFERENTIAL

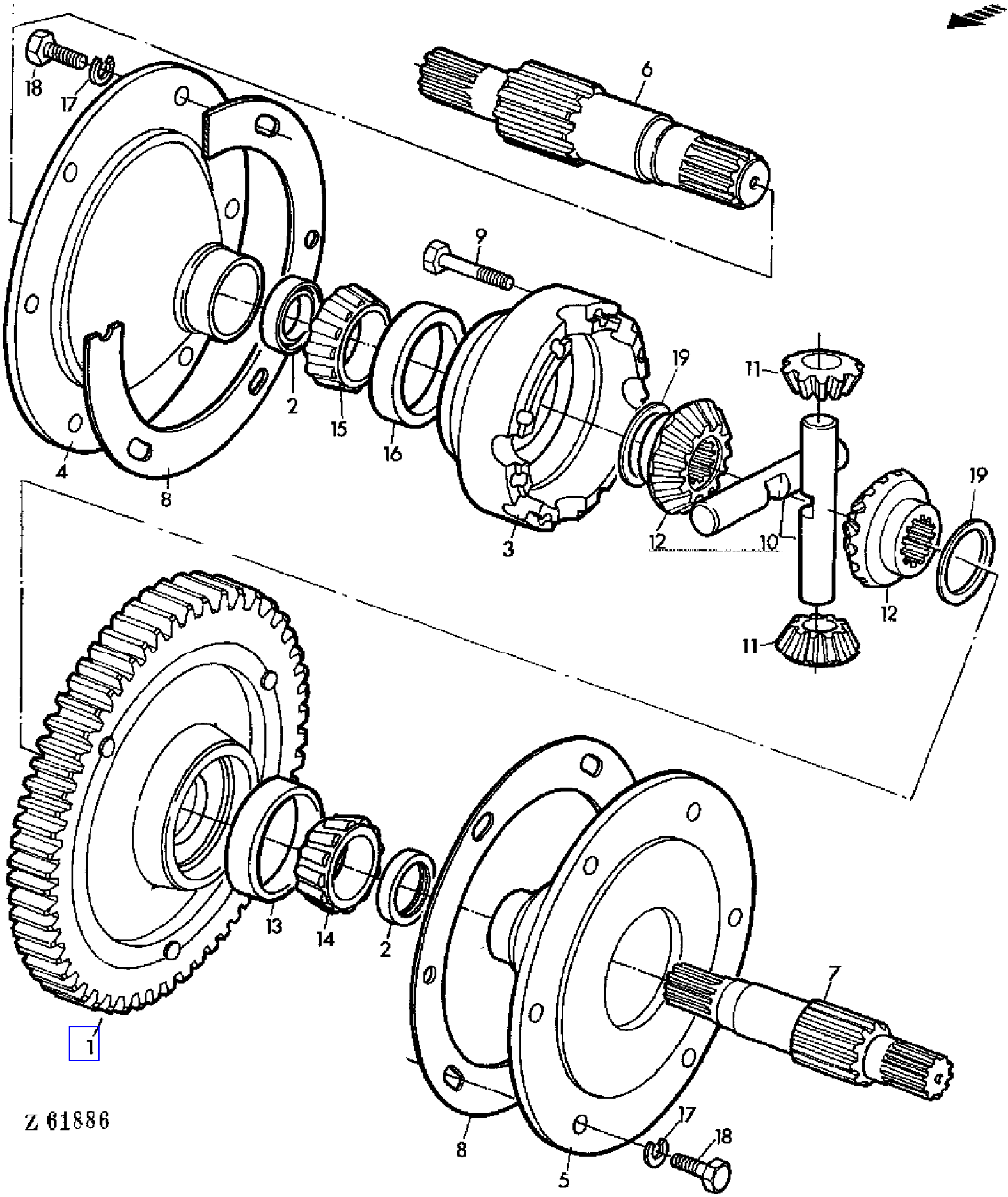

COPYRIGHT©1994 - 2008 DEERE & COMPANY Moline, Illinois All rights reserved

(PC4146) 955 Combine

(1H02) DIFFERENTIAL
DIFFERENTIEL
DIFFERENTIAL
DIFFERENZIALE
DIFERENCIAL
DIFFERENTIAL

KEY	PART NO.	PART NAME	QTY	SERIAL NO.		955	REMARKS
1	AZ23520	HOUSING	1			X	
	AZ15660	GEAR	1			X	(ORD AZ23520, Z34489)
2	AZ16786	SEAL	2			X	
3	Z10964	HOUSING	1			X	
	Z10333	HOUSING	1			X	(ORD Z10964, Z34489)
4	Z10547	HOUSING	1			X	RH
5	Z10548	HOUSING	1			X	LH
6	Z27545	SHAFT	1		- 016667	X	RH
	Z37946	SHAFT	1	016668	-	X	RH
7	Z27546	SHAFT	1		- 016667	X	LH
	Z37945	SHAFT	1	016668	-	X	LH
8	P49128	SHIM	AR			X	0.002"
	P48658	SHIM	AR			X	0.003"
	P49129	SHIM	AR			X	0.005"
	P49130	SHIM	AR			X	0.010"
	P49131	SHIM	AR			X	0.020"
9	T21430	CAP SCREW	AR			X	
10	L29226	SHAFT	2			X	
11	L29227	GEAR	4			X	
12	T29394	BEVEL GEAR	2			X	
13	JD7425	BEARING CUP	1			X	
14	JD8161	BEARING CONE	1			X	(SUB FOR JD8147)
15	JD8171	BEARING CONE	1			X	
16	JD8217	BEARING CUP	1			X	
17	12H301	LOCK WASHER	6			X	1/2"
18	19H1721	CAP SCREW	6			X	1/2"X1-1/2"
19	Z53354	WASHER	2			X	(SUB FOR Z34489)

COPYRIGHT©1994 - 2008 DEERE & COMPANY Moline, Illinois All rights reserved

(1I08) DISK BRAKES-FOOT BRAKE
FREIN A PIED A DISQUE
SCHEIBENBREMSEN-FUSSBREMSE
FRENI A DISCO-FRENI A PEDALE
FRENO DE PIE CON DISCOS
SKIVBROMSAR-FOTBROMS

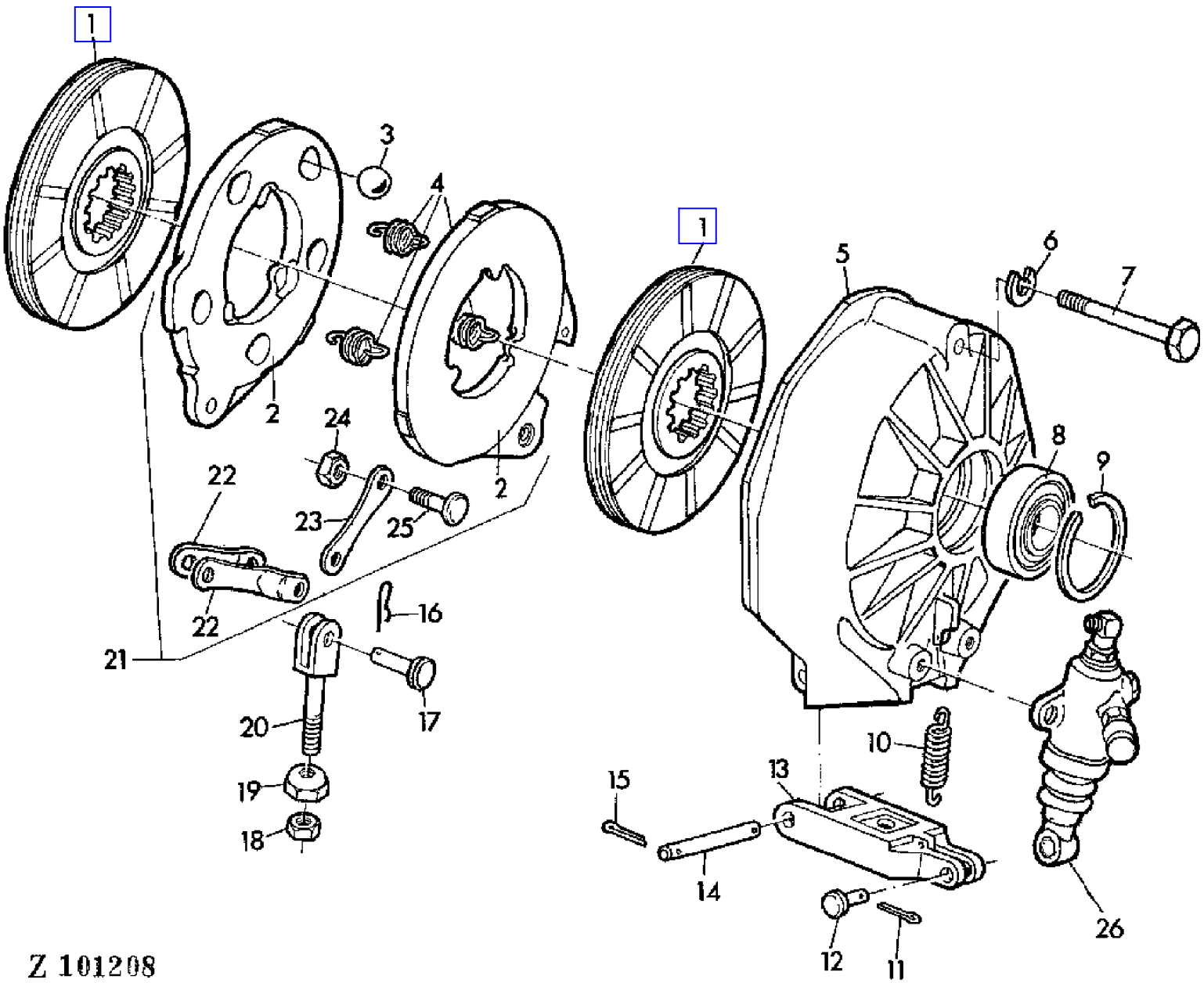

COPYRIGHT©1994 - 2008 DEERE & COMPANY Moline, Illinois All rights reserved

(1I08) DISK BRAKES-FOOT BRAKE
FREIN A PIED A DISQUE
SCHEIBENBREMSEN-FUSSBREMSE
FRENI A DISCO-FRENI A PEDALE
FRENO DE PIE CON DISCOS
SKIVBROMSAR-FOTBROMS

KEY	PART NO.	PART NAME	QTY	SERIAL NO.			955	REMARKS
1	AZ20844	BRAKE DISK	4				X	
2	Z10811	BRAKE ACTUATING DISK	4		-	021050	X	
	AZ28122	BRAKE ACTUATING DISK	4	021051	-		X	
3	M830T	BALL	10				X	7/8"
4	Z32069	SPRING	6				X	
5	Z10699	HOUSING	2		-	016667	X	
	Z11172	HOUSING	2	016668	-		X	
6	12H301	LOCK WASHER	6				X	1/2"
7	19H1739	CAP SCREW	6				X	1/2"X4-1/2"
8	JD9301	BALL BEARING	2		-	016667	X	
	JD10087	BALL BEARING	2	016668	-		X	(SUB FOR JD8524)
9	P46407	SNAP RING	2		-	016667	X	
	40M1871	SNAP RING	2	016668	-		X	
10	Z30214	SPRING	2		-	021050	X	(ORD (2) Z38812)
	Z38812	EXTENSION SPRING	2	021051	-		X	
11	11M7011	COTTER PIN	2				X	3X15MM
12	45M6299	PIN	2				X	10X50X42MM
13	Z10698	LEVER	2				X	
14	N120232	PIN	2				X	
15	11H211	COTTER PIN	4				X	1/8"X3/4"
16	J16931	SPRING LOCKING PIN	2				X	
17	L364T	PIN	2				X	7/16"X1-15/16"
18	14H934	NUT	2				X	7/16"
19	H33513	NUT	2				X	
20	P48669	YOKE	2				X	
21	AZ20843	BRAKE ACTUATING DISK	2		-	021050	X	ASSY, INCL KEYS 2-4,22-25
	AZ28123	BRAKE ACTUATING DISK	2	021051	-		X	ASSY, INCL KEYS 2-4,22-25
22	Z32070	LEVER	4				X	
23	Z32071	LEVER	2				X	
24	14H774	NUT	4				X	3/8"
25	Z32072	BOLT	4				X	
26	.....	HYDRAULIC CYLINDER	1				X	SECTION 70

COPYRIGHT©1994 - 2008 DEERE & COMPANY Moline, Illinois All rights reserved

(1I10) DISK BRAKES-HANDBRAKE
FREIN A MAIN A DISQUE
SCHEIBENBREMSE-HANDBREMSE
FRENO A DISCO-FRENO A MANO
FRENO DE MANO CON DISCOS
SKIVBROMS-HANDBROMS

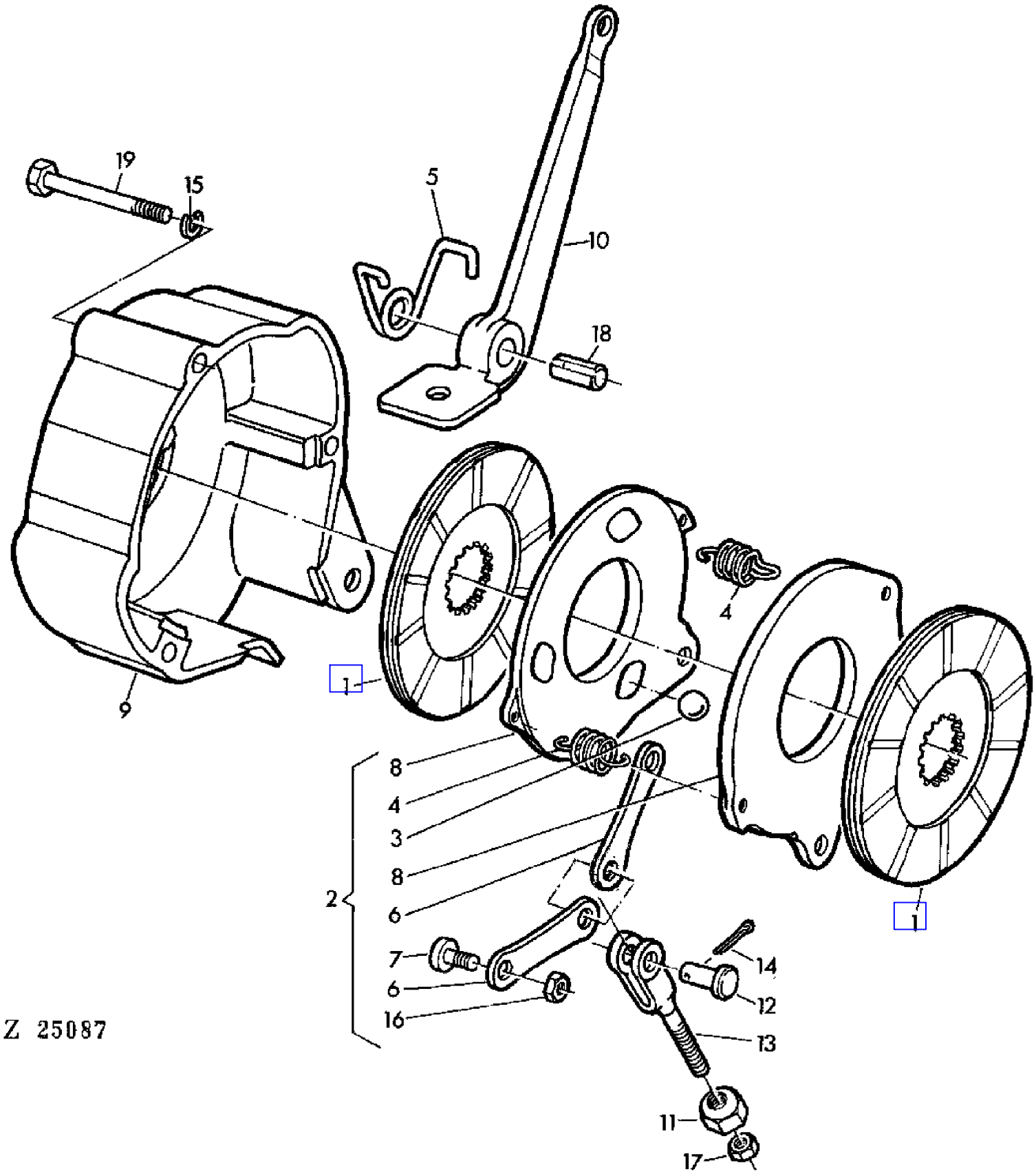

COPYRIGHT©1994 - 2008 DEERE & COMPANY Moline, Illinois All rights reserved

(1I10) DISK BRAKES-HANDBRAKE
FREIN A MAIN A DISQUE
SCHEIBENBREMSE-HANDBREMSE
FRENO A DISCO-FRENO A MANO
FRENO DE MANO CON DISCOS
SKIVBROMS-HANDBROMS

KEY	PART NO.	PART NAME	QTY	SERIAL NO.	955	REMARKS
1	AZ28508	BRAKE DISK	2		X	(SUB FOR AH21835)
2	AM3098T	DISK	1		X	ASSY, INCL KEYS 3-8,16
3	M830T	BALL	4		X	7/8"
4	M831T	SPRING	2		X	
5	Z37714	SPRING	1		X	(SUB FOR Z25992)
6	M833T	LEVER	2		X	
7	M834T	STUD	2		X	
8	M3332T	DISK	2		X	
9	H11492	HOUSING	1		X	
10	H11493	LEVER	1		X	
11	H62385	NUT	1		X	
12	P48769	PIN	1		X	
13	T19037	YOKE	1		X	
14	11H206	COTTER PIN	1		X	3/32"X1"
15	12M7013	LOCK WASHER	3		X	10MM
16	14H463	NUT	2		X	5/16"
17	14H774	NUT	1		X	3/8"
18	34H375	SPRING PIN	1		X	1/2"X3"
19	19H2228	CAP SCREW	3		X	3/8"X4"

COPYRIGHT©1994 - 2008 DEERE & COMPANY Moline, Illinois All rights reserved

(3B23) DOOR LOCK- OPERATOR'S CAB
SERRURE DE CABINE
TUERSCHLOSS-FAHRERKABINE
SERRATURA DELLO SPORTELLO DELLA CABINA
CERRADURA DE LA PUERTA DE CABINA
DORRLAS FOR FORARHYTT

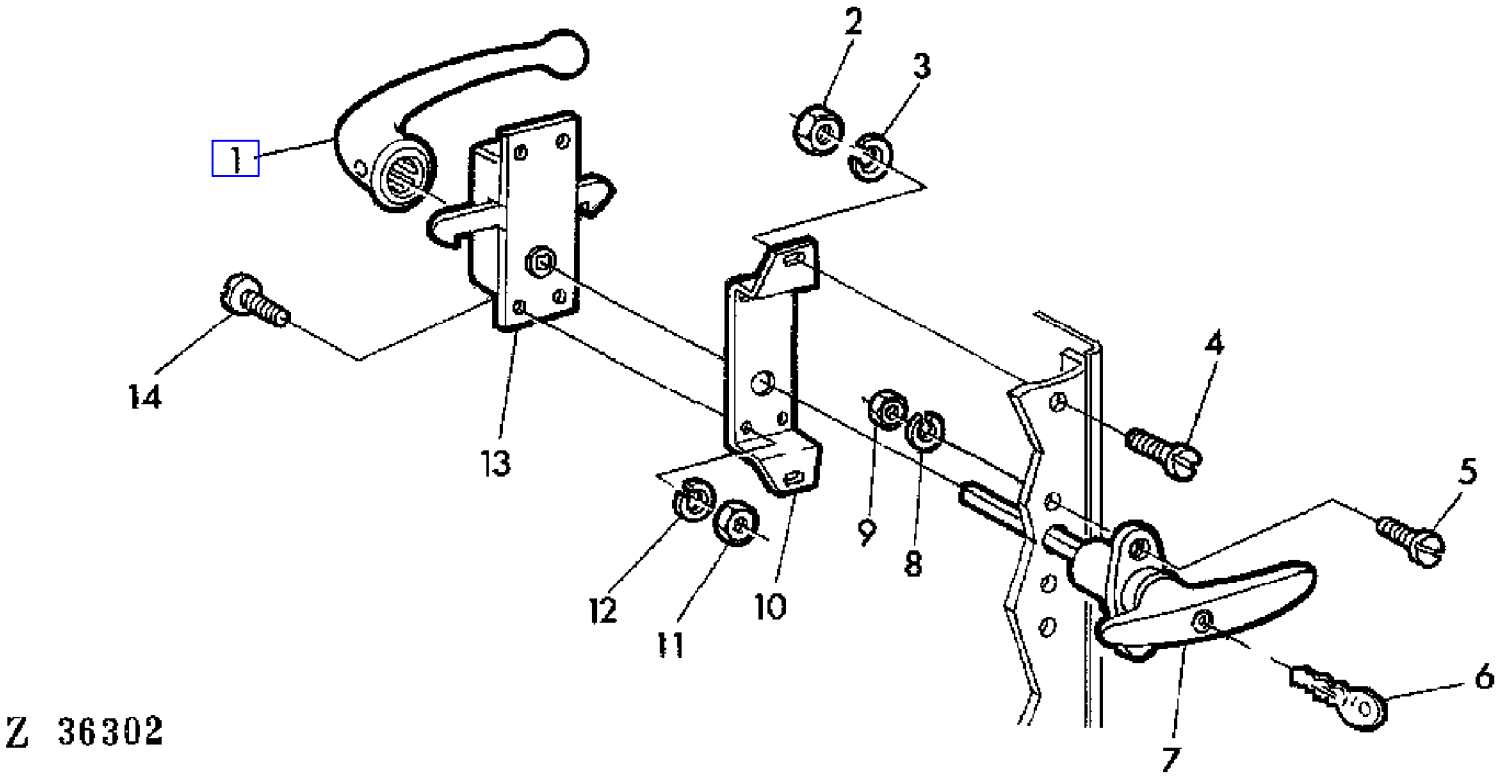

COPYRIGHT©1994 - 2008 DEERE & COMPANY Moline, Illinois All rights reserved

(3B23) DOOR LOCK- OPERATOR'S CAB
SERRURE DE CABINE
TUERSCHLOSS-FAHRERKABINE
SERRATURA DELLO SPORTELLO DELLA CABINA
CERRADURA DE LA PUERTA DE CABINA
DORRLAS FOR FORARHYTT

KEY	PART NO.	PART NAME	QTY	SERIAL NO.	955	REMARKS
1	DA19436	GRIP	1		X	
2	14M7029	NUT	4		X	M8
3	12M7008	LOCK WASHER	2		X	8MM
4	19M7295	CAP SCREW	2		X	M8X45
5	21M7223	BOLT	4		X	M5X45
6	.....	KEY	2		X	NSEP (ORD DA19435)
7	DA19435	GRIP	1		X	INCL KEY 6
8	12M7011	LOCK WASHER	2		X	5MM
9	14M7028	NUT	2		X	M5
10	CA19433	SUPPORT	1		X	
11	14M7027	NUT	8		X	M6
12	12M7012	LOCK WASHER	8		X	6MM
13	DA19434	LOCK	1		X	
14	21M7031	SCREW	8		X	M6X15

COPYRIGHT©1994 - 2008 DEERE & COMPANY Moline, Illinois All rights reserved

(2G24) DRIVE BELTS
COURROIES D'ENTRAINEMENT
ANTRIEBSRIEMENPLAN
CINGHIE DI COMANDO
CORREAS DE ACCIONAMIENTO
DRIVREMMAR

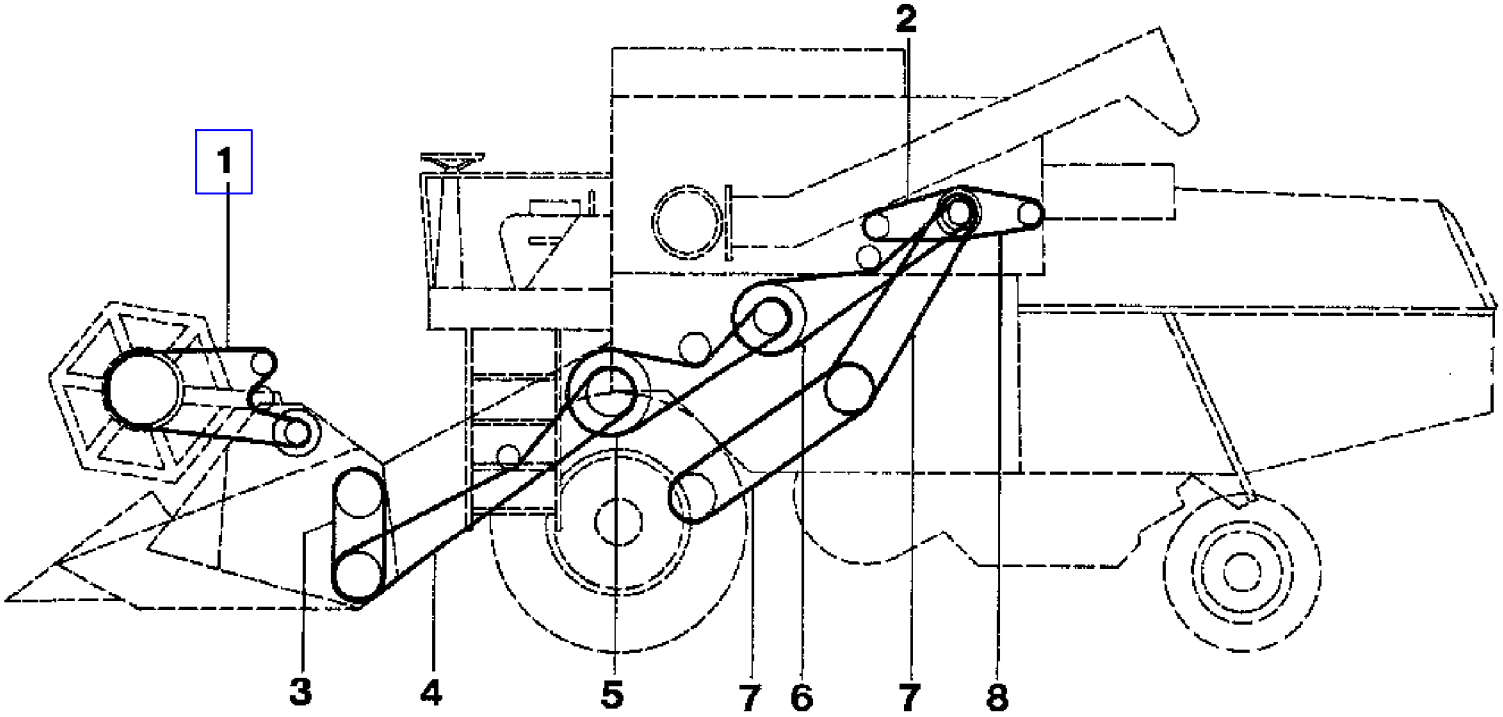

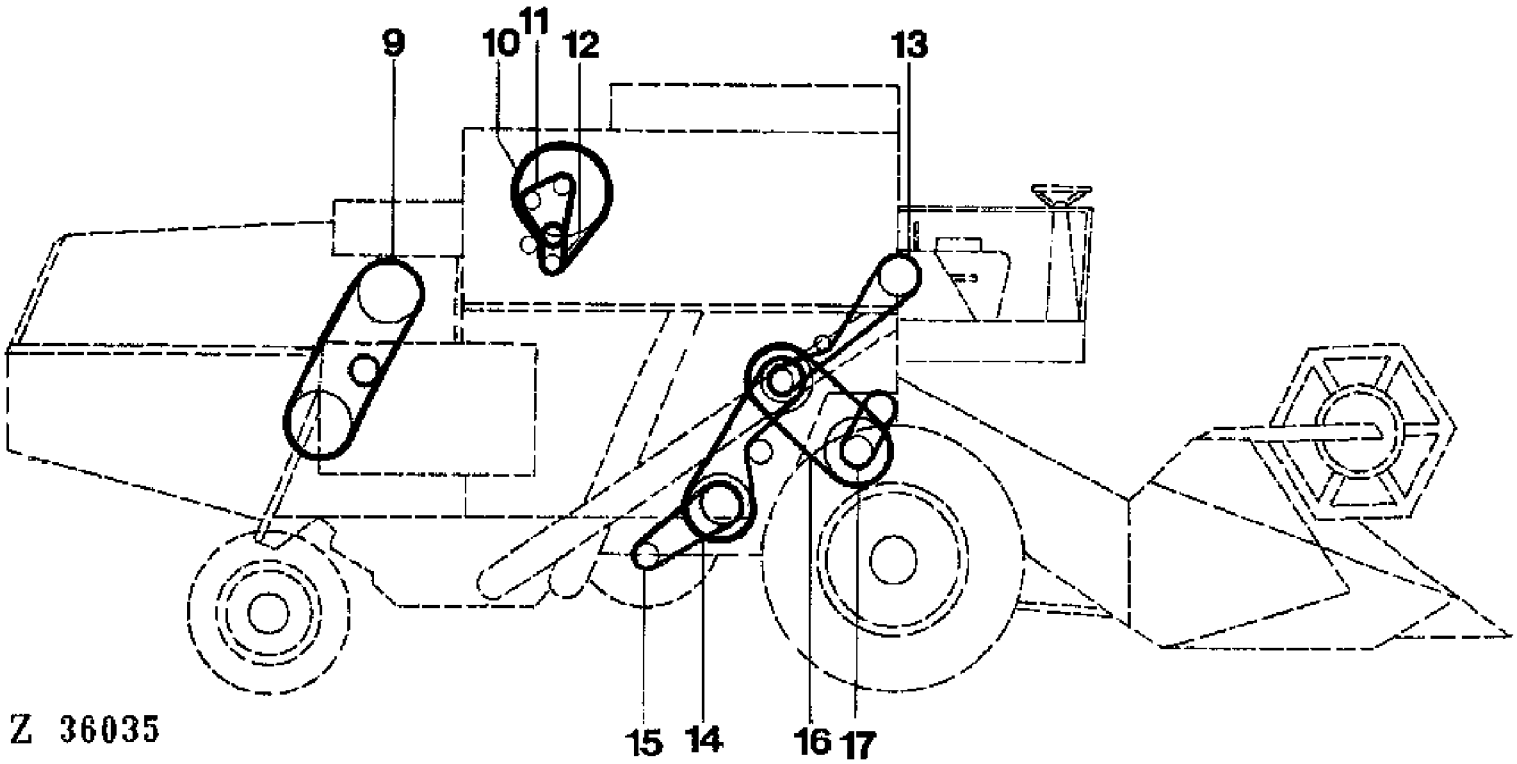

COPYRIGHT©1994 - 2008 DEERE & COMPANY Moline, Illinois All rights reserved

(PC4146) 955 Combine

(2G24) DRIVE BELTS
COURROIES D'ENTRAINEMENT
ANTRIEBSRIEMENPLAN
CINGHIE DI COMANDO
CORREAS DE ACCIONAMIENTO
DRIVREMMAR

KEY	PART NO.	PART NAME	QTY	SERIAL NO.			955	REMARKS
1	Z44740	BELT	1				X	LGTH = 3983 MM 156.81" (SUB FOR Z20562)
2	Z21400	BELT	1				X	LGTH = 1850 MM 72.83"
3	Z36813	BELT	1				X	10', LGTH = 1211 MM 47.68"
	Z30692	BELT	1				X	12-16', LGTH = 1480 MM 58.27"
4	Z30130	BELT	1		-	024652	X	LGTH = 3925 MM 154.53" (ORD Z39313)
	Z39313	BELT	1	024653	-		X	LGTH = 3875 MM 152.56" (SUB FOR Z30130)
	Z25670	BELT	1				X	LGTH = 4345 MM 171.06"
5	Z32568	BELT	1				X	LGTH = 3510 MM 138.19"
	Z21501	BELT	1				X	LGTH = 3520 MM 138.58"
6	Z21403	BELT	1				X	LGTH = 3315 MM 130.51"
7	Z34121	BELT	2		-	026952	X	LGTH = 3283 MM 129.25"
	Z33967	BELT	2	026953	-		X	LGTH = 3492 MM
8	Z34828	BELT	1				X	LGTH = 1428 MM 56.22"
9	Z32883	BELT	1				X	LGTH = 2840 MM 111.81"
10	Z31283	BELT	1				X	LGTH = 2080 MM 81.89"
11	AT28030	BELT SET	1				X	KIT
12	Z32190	BELT	1				X	LGTH = 593 MM 23.35"
13	Z20743	BELT	1				X	LGTH = 2210 MM 87"
14	Z34405	BELT	1				X	LGTH = 3060 MM 120.47"
15	Z41178	BELT	1				X	LGTH = 1174 MM 46.22"
16	Z53288	BELT	1				X	LGTH = 2121 MM 83.5" (SUB FOR Z20823)
17	Z31867	BELT	1				X	

COPYRIGHT©1994 - 2008 DEERE & COMPANY Moline, Illinois All rights reserved

(3G14) DRIVE PARTS FOR HYDROSTATIC REEL DRIVE
ELEMENTS D'ENTRAINEMENT HYDROSTATIQUE DU RABATTEUR
ANTRIEBSTEILE FUER HYDROSTATISCHEN HASPELANTRIEB
PARTI COMANDO ID OSTATICO DELL'ASPO
PIEZAS PARA LA TRANSMISION HIDROSTATICA DEL MOLINETE
DELAR AV HYDROSTATISKT HASPELDRIVNING

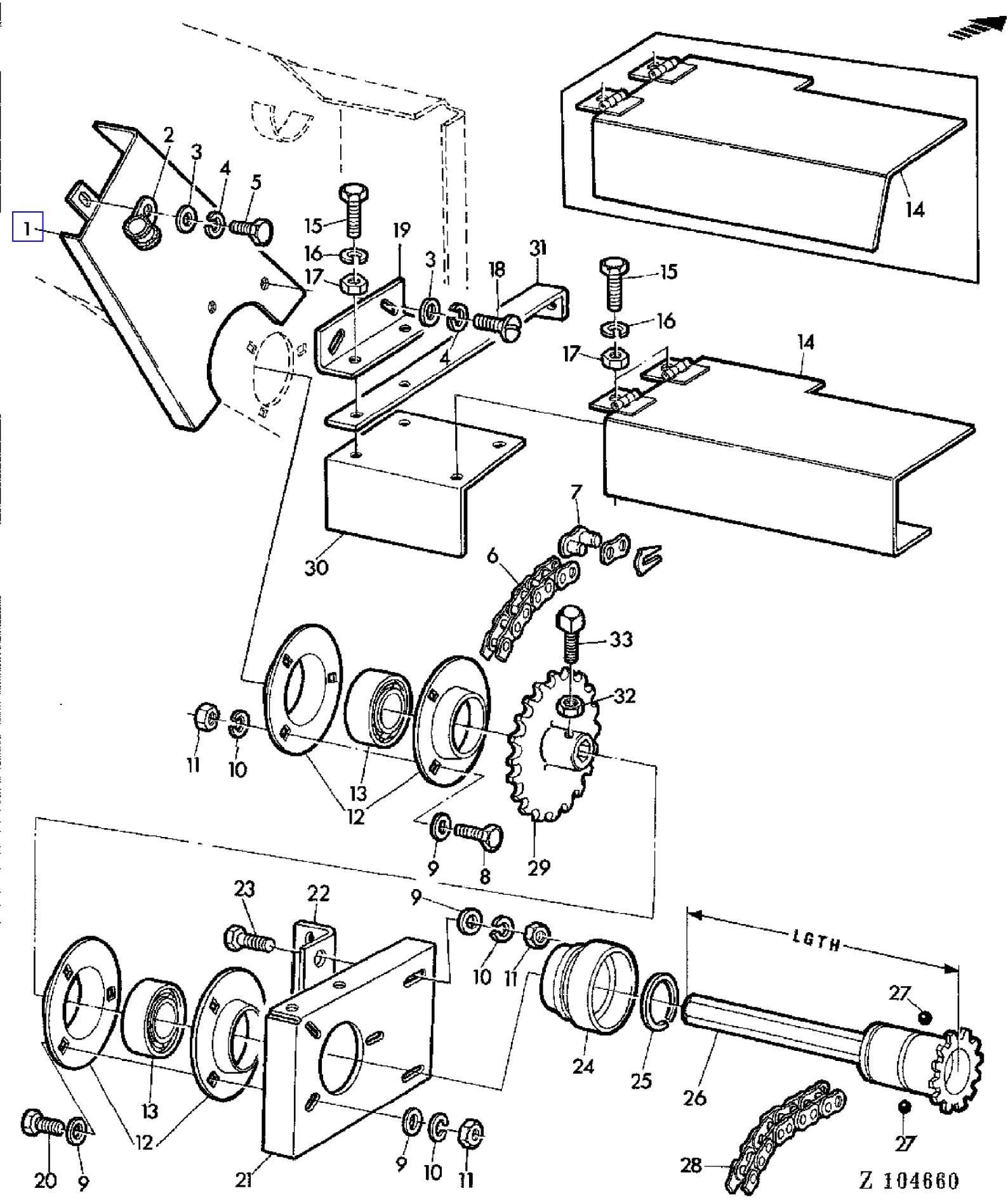

COPYRIGHT©1994 - 2008 DEERE & COMPANY Moline, Illinois All rights reserved

(3G14) DRIVE PARTS FOR HYDROSTATIC REEL DRIVE
ELEMENTS D'ENTRAINEMENT HYDROSTATIQUE DU RABATTEUR
ANTRIEBSTEILE FUER HYDROSTATISCHEN HASPELANTRIEB
PARTI COMANDO ID OSTATICO DELL'ASPO
PIEZAS PARA LA TRANSMISION HIDROSTATICA DEL MOLINETE
DELAR AV HYDROSTATISKT HASPELDRIVNING

KEY	PART NO.	PART NAME	QTY	SERIAL NO.	955	REMARKS
1	AZ25029	GUARD	1		X	
2	Z28191	CLAMP	1		X	
3	24M7088	WASHER	AR		X	6,6MM
4	12M7012	LOCK WASHER	AR		X	6MM
5	19M7286	CAP SCREW	AR		X	M6X25
6	AZ25031	LINK CHAIN	1		X	L = 118, INCL KEY 7
7	AL14207	LINK	1		X	
8	19M7382	CAP SCREW	AR		X	M10X40
9	24M7040	WASHER	AR		X	11MM
10	12M7013	LOCK WASHER	AR		X	10MM
11	14M7140	NUT	AR		X	M10
12	Z34740	QUILL	4		X	
13	AZ23315	BALL BEARING	2		X	
14	AZ25043	GUARD	1	- XXXX	X	
	AZ25219	GUARD	1	XXXX -	X	
15	19M7139	CAP SCREW	4		X	M8X20
16	12M7008	LOCK WASHER	4		X	8MM
17	14M7029	NUT	4		X	M8
18	21M7031	SCREW	2		X	M6X15
19	Z36046	ANGLE	1		X	
20	19M7168	CAP SCREW	AR		X	M10X30
21	Z35317	BRACKET	1		X	
22	Z35318	ANGLE	1		X	
23	19M7167	CAP SCREW	AR		X	M10X25
24	AH89038	QUICK COUPLER	1		X	
25	H25360	SNAP RING	1		X	
26	AZ20401	DRIVE SHAFT	1		X	LGTH = 1805 MM, AR
27	N104243	BALL	3		X	
28	AN102383	LINK CHAIN	1		X	
29	AZ25030	CHAIN SPROCKET	1		X	Z = 42
30	Z36287	SHEET	1	XXXX -	X	
31	Z36285	HOLDER	1	XXXX -	X	
32	14M7152	NUT	2		X	M10
33	Z26249	SET SCREW	2		X	

COPYRIGHT©1994 - 2008 DEERE & COMPANY Moline, Illinois All rights reserved

(4F06) DRIVE PARTS-LARGE GRAIN TANK EXTENSION
ENTRAINEMENT-GRANDE REHAUSSE DE TREMIE
ANTRIEBSTEILE-GROSSER KORNTANKAUFSATZ
COMANDO-ESTENSIONE GRANDE SERBATOIO GRANO
PIEZAS DE TRANSMISION-EXTENSION GRANDE DEL TANQUE DE GRANO
DRIVNING FOR STOR SPANNMALSTANKENS FORHOJNING

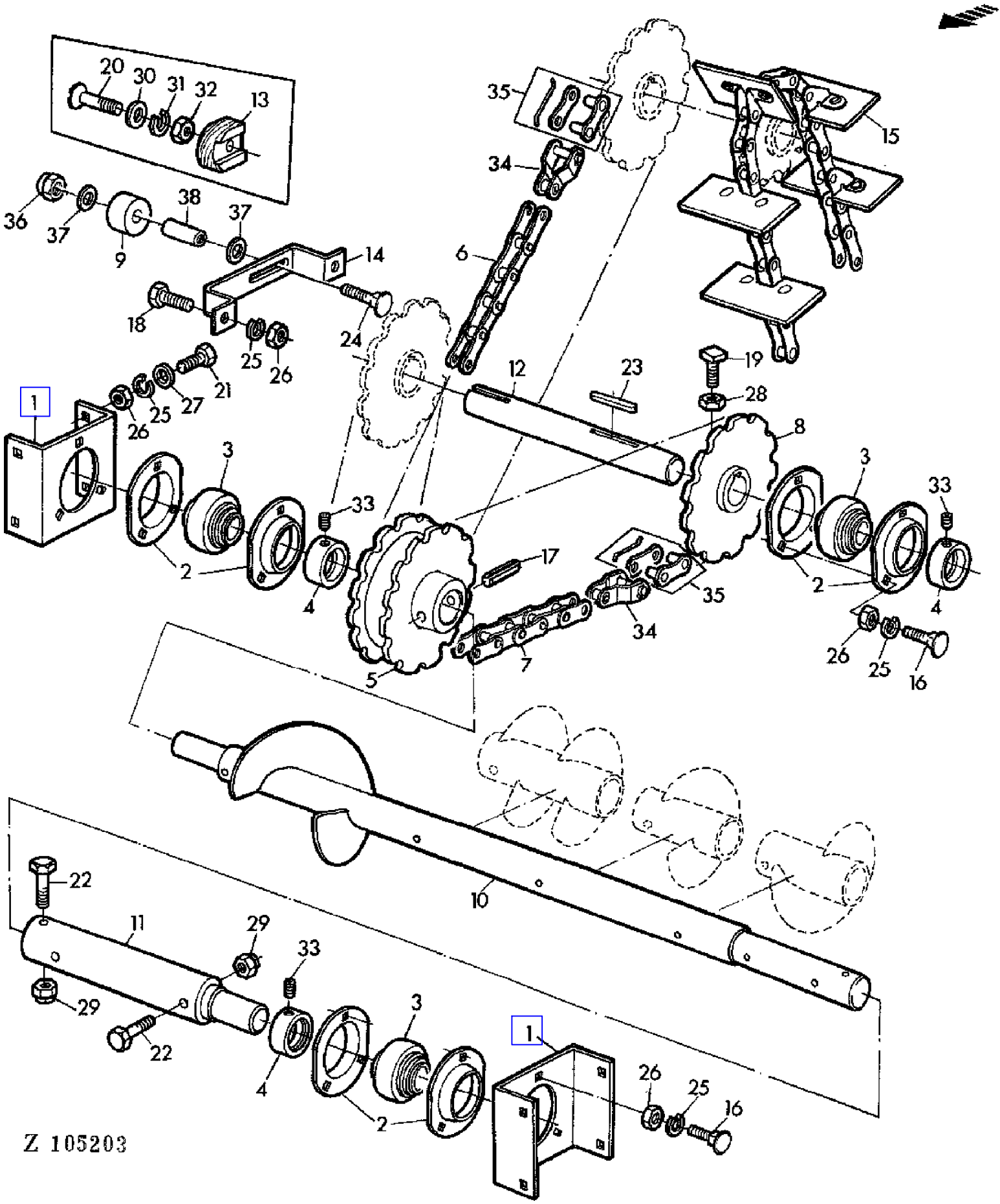

COPYRIGHT©1994 - 2008 DEERE & COMPANY Moline, Illinois All rights reserved

(4F06) DRIVE PARTS-LARGE GRAIN TANK EXTENSION
ENTRAINEMENT-GRANDE REHAUSSE DE TREMIE
ANTRIEBSTEILE-GROSSER KORNTANKAUFSATZ
COMANDO-ESTENSIONE GRANDE SERBATOIO GRANO
PIEZAS DE TRANSMISION-EXTENSION GRANDE DEL TANQUE DE GRANO
DRIVNING FOR STOR SPANNMALSTANKENS FORHOJNING

KEY	PART NO.	PART NAME	QTY	SERIAL NO.	955	REMARKS
1	Z33577	BRACKET	2		X	
2	P47232	PRESSED FLANGED HOUSING	4		X	
3	JD39105	BALL BEARING	2		X	
4	AZ10044	ECCENTRIC LOCKING COLLAR	2		X	ASSY, INCL KEY 33
5	Z10620	CHAIN SPROCKET	1		X	Z = 16
6	AZ32090	ROLLER CHAIN	1		X	L = 34, INCL KEY 35 (SUB FOR AZ10363)
7	AZ17183	LINK CHAIN	1		X	L = 60, INCL KEY 35
8	Z10117	CHAIN SPROCKET	1		X	Z = 16
9	Z41483	TIGHTENER	1		X	(ORD AZ34262) (SUB FOR Z27775)
	Z44030	TIGHTENER	1	XXXX -	X	
10	AZ17184	AUGER	1		X	
11	AZ17185	SHAFT	1		X	
12	Z28534	SHAFT	1		X	
13	Z27775	TIGHTENER	1		X	
14	Z28532	HOLDER	1		X	
15	AZ17182	LINK CHAIN	1		X	ASSY, L = 29
16	03M7054	BOLT	9		X	M8X20
17	34M7050	SPRING PIN	1		X	8X55MM
18	19M7139	CAP SCREW	2		X	M8X20
19	Z26249	SET SCREW	2		X	
20	03M7059	BOLT	1		X	M10X55
21	19M7162	CAP SCREW	4		X	M8X15
22	19M7595	CAP SCREW	2		X	M6X50
23	49M4108	SHAFT KEY	1		X	8X7X32MM
24	03M7246	BOLT	1		X	M10X60
25	12M7008	LOCK WASHER	24		X	8MM
26	14M7029	NUT	24		X	M8
27	24M7036	WASHER	4		X	9MM
28	14M7152	NUT	2		X	M10
29	14M7165	LOCK NUT	2		X	M6
30	24M7040	WASHER	1		X	11MM
31	12M7013	LOCK WASHER	1		X	10MM
32	14M7140	NUT	1		X	M10
33	AZ19843	SET SCREW	2		X	KIT
34	AL15953	LINK	AR		X	
35	AL15954	LINK	AR		X	
36	14M7167	LOCK NUT	1		X	M10
37	24M7178	WASHER	2	XXXX -	X	10,5MM
38	Z44032	BUSHING	1	XXXX -	X	
..	AZ34262	TIGHTENER	1	- XXXX	X	KIT

COPYRIGHT©1994 - 2008 DEERE & COMPANY Moline, Illinois All rights reserved

(3G04) DRIVE PULLEY AND IDLER
POULIE D'ENTRAINEMENT ET TENDEUR
ANTRIEBSSCHEIBE UND SPANNROLLE
PULEGGIA COMANDO E TENDITORE
POLEA DE ACCIONAMIENTO Y TENSOR
DRIVSKIVA OCH SPANRULLE

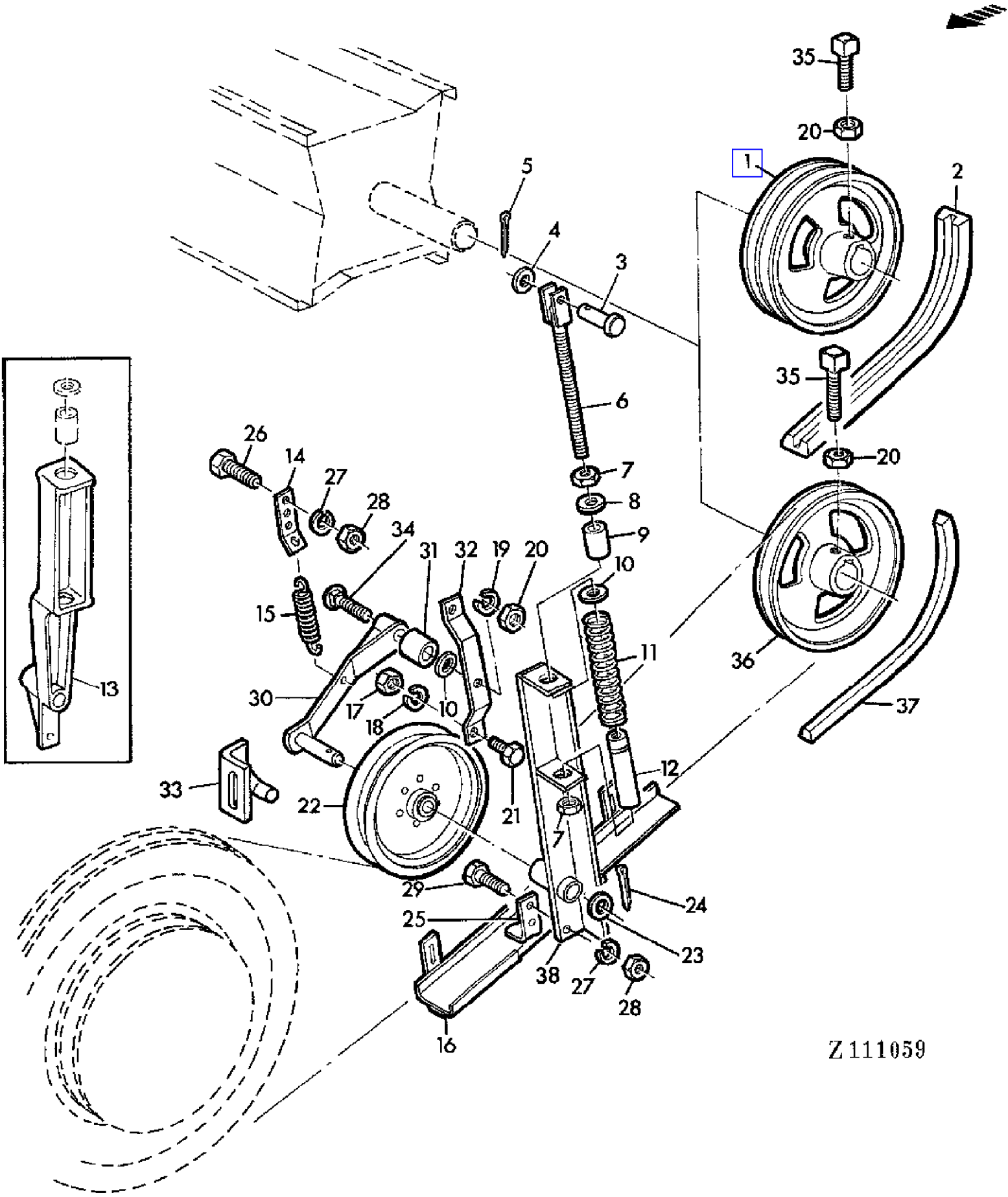

COPYRIGHT©1994 - 2008 DEERE & COMPANY Moline, Illinois All rights reserved

(3G04) DRIVE PULLEY AND IDLER
POULIE D'ENTRAINEMENT ET TENDEUR
ANTRIEBSSCHEIBE UND SPANNROLLE
PULEGGIA COMANDO E TENDITORE
POLEA DE ACCIONAMIENTO Y TENSOR
DRIVSKIVA OCH SPANRULLE

KEY	PART NO.	PART NAME	QTY	SERIAL NO.	955	REMARKS
1	Z10749	PULLEY	1		X	(B)
2	Z32568	BELT	1		X	(B)
3	Z24489	PIN	1		X	
4	24M7043	WASHER	1		X	12MM
5	11M7019	COTTER PIN	1		X	4X20MM
6	AZ19135	ADJUSTER	1		X	(SUB FOR AZ25434)
7	14M7157	NUT	2		X	M14
8	24M7112	WASHER	1		X	15MM
9	Z30552	SPACER	1		X	
10	L17952	WASHER	2		X	
11	Z30554	SPRING	1		X	(SUB FOR Z36539)
	.....	SPRING	1	012532 - 022077	X	(ORD AZ29327)
12	AZ19136	SLEEVE	1		X	(SUB FOR Z36536)
13	Z10720	BRACKET	1	- 012531	X	
14	Z24770	HOLDER	1		X	
15	Z22925	EXTENSION SPRING	1		X	
16	AZ21433	GUIDE	1		X	
17	14M7140	NUT	4		X	M10
18	12M7013	LOCK WASHER	2		X	10MM
19	12M7014	LOCK WASHER	2		X	12MM
20	14M7031	NUT	2		X	M12
21	19M7166	CAP SCREW	2		X	M10X20
22	AN30569	IDLER	1	- 022077	X	(ORD AZ29327)
	AZ29185	IDLER	1	022078 -	X	(SUB FOR AZ29037)
23	24M7053	WASHER	1		X	17MM
24	11M7020	COTTER PIN	1		X	4X25MM
25	Z21892	STRAP	1		X	
26	19M7162	CAP SCREW	1		X	M8X15
27	12M7008	LOCK WASHER	2		X	8MM
28	14M7029	NUT	2		X	M8
29	19M7139	CAP SCREW	1		X	M8X20
30	AZ18151	LEVER	1	- 022077	X	(ORD AZ29327)
	AZ29040	LEVER	1	022078 -	X	
31	Z39569	BUSHING	1		X	(SUB FOR Z29493)
32	Z29488	BRACE	1		X	
33	AZ28363	HOLDER	1		X	(B)
34	03M7155	BOLT	1		X	M12X75
35	Z32434	SET SCREW	2		X	12X30MM
36	Z10748	SHEAVE	1		X	(A)

(A) GRAIN
CEREALES
GETREIDE
GRANO
CEREALES
SAD

(B) MAIZE
MAIS
MAIS
MAIS
MAIZ
MAJS

COPYRIGHT©1994 - 2008 DEERE & COMPANY Moline, Illinois All rights reserved

(3G04) DRIVE PULLEY AND IDLER
POULIE D'ENTRAINEMENT ET TENDEUR
ANTRIEBSSCHEIBE UND SPANNROLLE
PULEGGIA COMANDO E TENDITORE
POLEA DE ACCIONAMIENTO Y TENSOR
DRIVSKIVA OCH SPANRULLE

KEY	PART NO.	PART NAME	QTY	SERIAL NO.			955	REMARKS
37	Z21501	BELT	1				X	(A)
38	AZ25435	BRACKET	1	012532	-	022077	X	(ORD AZ29327)
	AZ29039	SUPPORT	1	022078	-		X	
..	AZ29327	CHANNEL	1		-	022077	X	INCL KEYS 6-12,22,25,30,31,38

(A) GRAIN
CEREALES
GETREIDE
GRANO
CEREALES
SAD

(B) MAIZE
MAIS
MAIS
MAIS
MAIZ
MAJS

COPYRIGHT©1994 - 2008 DEERE & COMPANY Moline, Illinois All rights reserved

(3G08) DRIVE PULLEY FOR MAIZE
POULIE D'ENTRAINEMENT MAIS
ANTRIEBSSCHEIBE FUER MAIS
PULEGGIA COMANDO PER MAIS
POLEA DE ACCIONAMIENTO USADA PARA MAIZ
DRIVSKIVA FOR MAJS

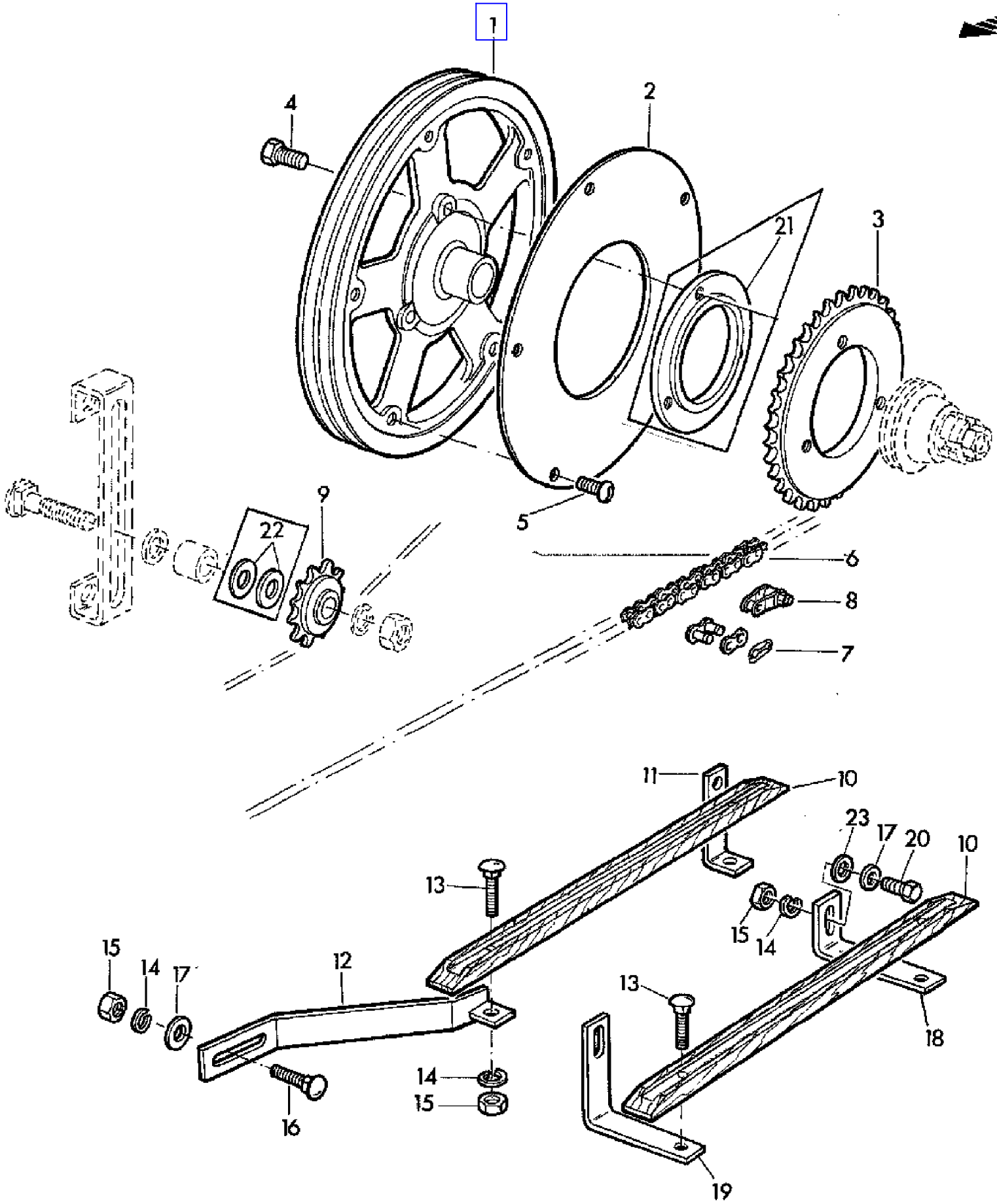

COPYRIGHT©1994 - 2008 DEERE & COMPANY Moline, Illinois All rights reserved

(3G08) DRIVE PULLEY FOR MAIZE
POULIE D'ENTRAINEMENT MAIS
ANTRIEBSSCHEIBE FUER MAIS
PULEGGIA COMANDO PER MAIS
POLEA DE ACCIONAMIENTO USADA PARA MAIZ
DRIVSKIVA FOR MAJS

KEY	PART NO.	PART NAME	QTY	SERIAL NO.			955	REMARKS
1	Z11081	SHEAVE	1		-	XXXX	X	(SUB FOR Z10888)
	Z11285	SHEAVE	1	XXXX	-		X	
2	Z30562	GUARD	1		-	XXXX	X	
	Z39576	GUARD	1	XXXX	-		X	
3	Z39311	CHAIN SPROCKET	1				X	3/4", Z = 51 (SUB FOR Z30555)
4	19M7181	CAP SCREW	3				X	M10X55
5	21M7083	SCREW	6				X	M6X10
6	AZ19133	LINK CHAIN	1		-	024836	X	3/4", L = 195, INCL KEYS 7,8
	AZ19482	LINK CHAIN	1		-	024836	X	(A) 3/4", L = 219, INCL KEYS 7,8
	AZ28814	LINK CHAIN	1	024837	-		X	3/4", L = 193, INCL KEYS 7,8
	AZ28815	LINK CHAIN	1	024837	-		X	(A) 3/4", L = 218, INCL KEYS 7,8
7	AL14211	LINK	1				X	3/4"
8	AL14908	LINK	1				X	3/4"
9	AN31211	CHAIN SPROCKET	1				X	Z = 15
10	Z39577	GUIDE	2				X	(SUB FOR Z30544)
	Z39578	GUIDE	2				X	(A) (SUB FOR Z30876)
11	Z30543	HOLDER	1				X	AR
	Z36572	HOLDER	1	XXXX	-		X	
12	AZ19140	HOLDER	1				X	AR
	AZ25479	HOLDER	1	XXXX	-		X	
13	03M7098	BOLT	AR				X	M10X35
14	12M7013	LOCK WASHER	AR				X	10MM
15	14M7140	NUT	AR				X	M10
16	03M7084	BOLT	AR				X	M10X25
17	24M7040	WASHER	AR				X	11MM
18	Z30541	ANGLE	1				X	AR
	Z36573	HOLDER	1	XXXX	-		X	
19	Z30540	ANGLE	1				X	AR
	Z36574	HOLDER	1	XXXX	-		X	
20	19M7168	CAP SCREW	AR				X	M10X30
21	Z36527	RING	1	006336	-		X	
22	24M7053	WASHER	2	006336	-		X	17MM
23	24M7101	WASHER	2				X	11,5MM

(A) FOR LONG FEEDER CONVEYOR
POUR CONVOYEUR D'ALIMENTATION LONG
FUER SCHRAEGFOERDERER LANG
PER CONVOGLIATORE LUNGO
PARA ELEVADOR DE MIES LARGO
FOR INMATNINGSELEVATOR

COPYRIGHT©1994 - 2008 DEERE & COMPANY Moline, Illinois All rights reserved

(3G10) DRIVE SHAFT FOR CORN HEAD(RIGHT-HAND)
ARBRE D'ENTRAINEMENT CUEILLEUR A MAIS (COTE DROIT)
ANTRIEBSWELLE FUER MAISPFLUECKVORSATZ (RECHTS)
ALBERO COMANDO PER SPANNOCCHIATORE(DESTRA)
EJE DE ACCIONAMIENTO DEL CABEZAL PARA MAIZ (LADO DERECHO)
DRIVAXEL FOR MAJSAGGREGAT(HOGER)

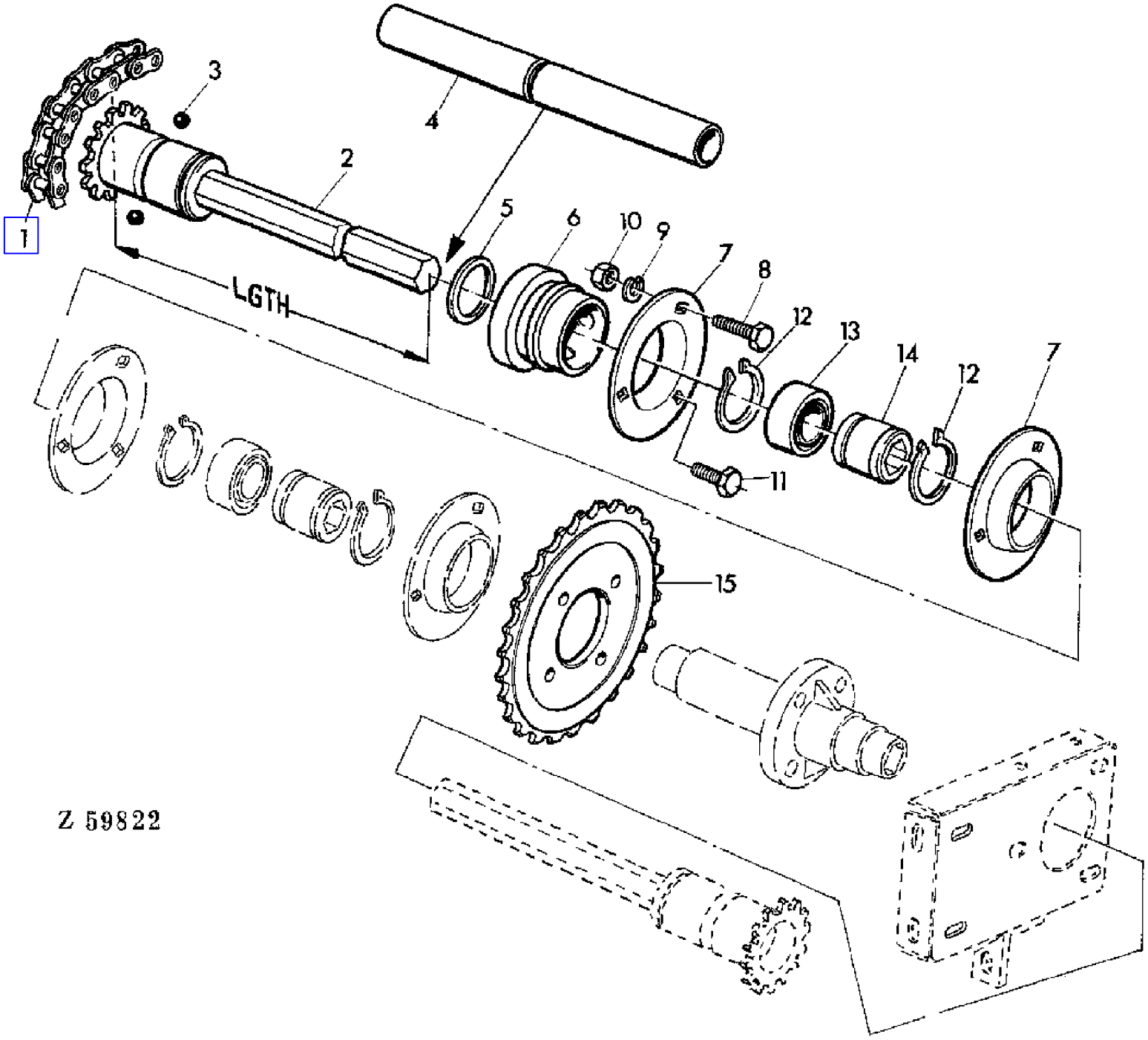

COPYRIGHT©1994 - 2008 DEERE & COMPANY Moline, Illinois All rights reserved

(3G10) DRIVE SHAFT FOR CORN HEAD(RIGHT-HAND)
ARBRE D'ENTRAINEMENT CUEILLEUR A MAIS (COTE DROIT)
ANTRIEBSWELLE FUER MAISPFLUECKVORSATZ (RECHTS)
ALBERO COMANDO PER SPANNOCCHIATORE(DESTRA)
EJE DE ACCIONAMIENTO DEL CABEZAL PARA MAIZ (LADO DERECHO)
DRIVAXEL FOR MAJSAGGREGAT(HOGER)

KEY	PART NO.	PART NAME	QTY	SERIAL NO.	955	REMARKS
1	AN102383	LINK CHAIN	1		X	RH
2	AZ20401	DRIVE SHAFT	1		X	RH, LGTH = 1805 MM 71"
3	N104243	BALL	3		X	
4	Z31708	GUARD	1		X	RH
5	H25360	SNAP RING	1		X	RH
6	AH89038	QUICK COUPLER	1		X	(SUB FOR AN102530)
7	Z34740	QUILL	2		X	
8	19M7169	CAP SCREW	2		X	M10X35
9	12M7013	LOCK WASHER	3		X	10MM
10	14M7140	NUT	3		X	M10
11	19M7168	CAP SCREW	1		X	M10X30
12	40M1835	SNAP RING	2		X	40X1,75MM
13	AZ23315	BALL BEARING	1		X	
14	Z30548	COUPLING	1		X	
15	Z30556	CHAIN SPROCKET	1		X	Z = 33

COPYRIGHT©1994 - 2008 DEERE & COMPANY Moline, Illinois All rights reserved

(3D16) DRYER-AIR CONDITIONED CAB
DESHYDRATEUR-CABINE CLIMATISEE
TROCKNER-KABINE MIT KLIMAANLAGE
ESSICCATORE-CABINA CONDIZIONATA
SECADOR-CABINA CON AIRE ACONDICIONADO
TORKBEHALLARE-HYTT MED LUFTKONDITIONERING

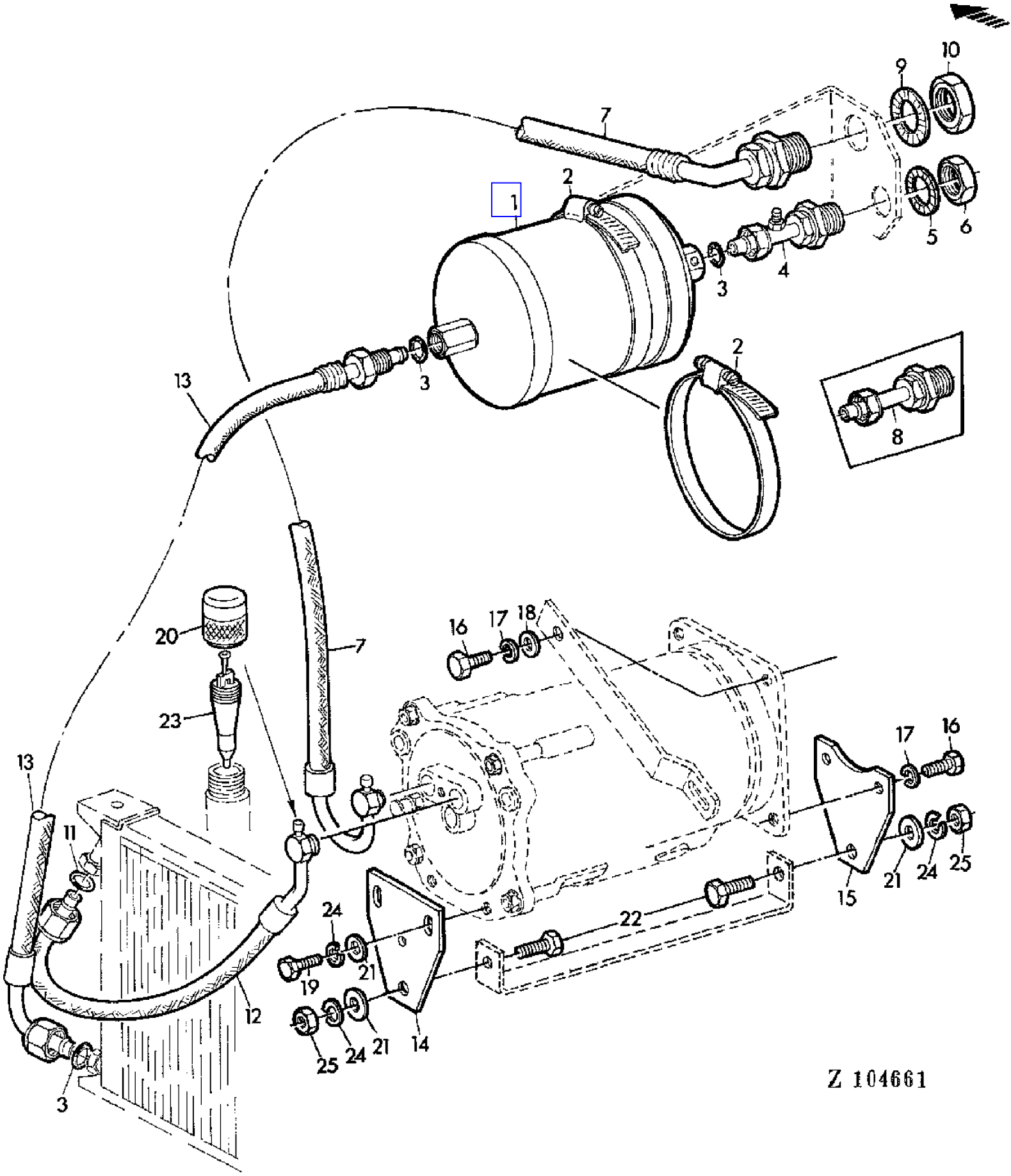

COPYRIGHT©1994 - 2008 DEERE & COMPANY Moline, Illinois All rights reserved

(3D16) DRYER-AIR CONDITIONED CAB
DESHYDRATEUR-CABINE CLIMATISEE
TROCKNER-KABINE MIT KLIMAANLAGE
ESSICCATORE-CABINA CONDIZIONATA
SECADOR-CABINA CON AIRE ACONDICIONADO
TORKBEHALLARE-HYTT MED LUFTKONDITIONERING

KEY	PART NO.	PART NAME	QTY	SERIAL NO.	955	REMARKS
1	AR59780	RECEIVER-DRYER	1		X	
2	Z33087	CLAMP	2		X	
3	R10093	O-RING	3		X	
4	AZ31714	ELBOW FITTING	1		X	
5	CA20544	LOCK WASHER	1		X	
6	R53000	NUT	1		X	(SUB FOR CA20545)
7	DA21763	HOSE	1		X	INCL KEYS 20,23
8	DA20542	FITTING	1		X	
9	CA20547	LOCK WASHER	1		X	
10	R52998	NUT	1		X	(SUB FOR CA20548)
11	P51212	O-RING	3		X	
12	DA21764	HOSE	1		X	INCL KEYS 20,23
13	DA20550	HOSE	1		X	
14	CA21466	PLATE	1		X	
15	H87101	PLATE	1		X	
16	19M7139	CAP SCREW	AR		X	M8X20
17	12M7008	LOCK WASHER	AR		X	8MM
18	24M7055	WASHER	AR		X	8,4MM
19	19M7402	CAP SCREW	2		X	M10X25
20	R60172	NUT	2		X	
21	24M7056	WASHER	AR		X	10,5MM
22	19M7167	CAP SCREW	2		X	M10X25
23	R60170	VALVE	2		X	
24	12M7013	LOCK WASHER	AR		X	10MM
25	14M7140	NUT	2		X	M10

COPYRIGHT©1994 - 2008 DEERE & COMPANY Moline, Illinois All rights reserved

(3F16) DUST PROTECTION FOR FEEDER HOUSE
PARE-POUSSIERE DU CONVOYEUR D'ALIMENTATION
STAUBSCHUTZ FUER SCHRAEGFOERDERER
PARAPOIVERE PER COLLO ALIMENTATORE
PROTECCION CONTRA EL POLVO PARA EL ALIMENTADOR
DAMMSKYDD FOR INMATNINGSELEVATOR

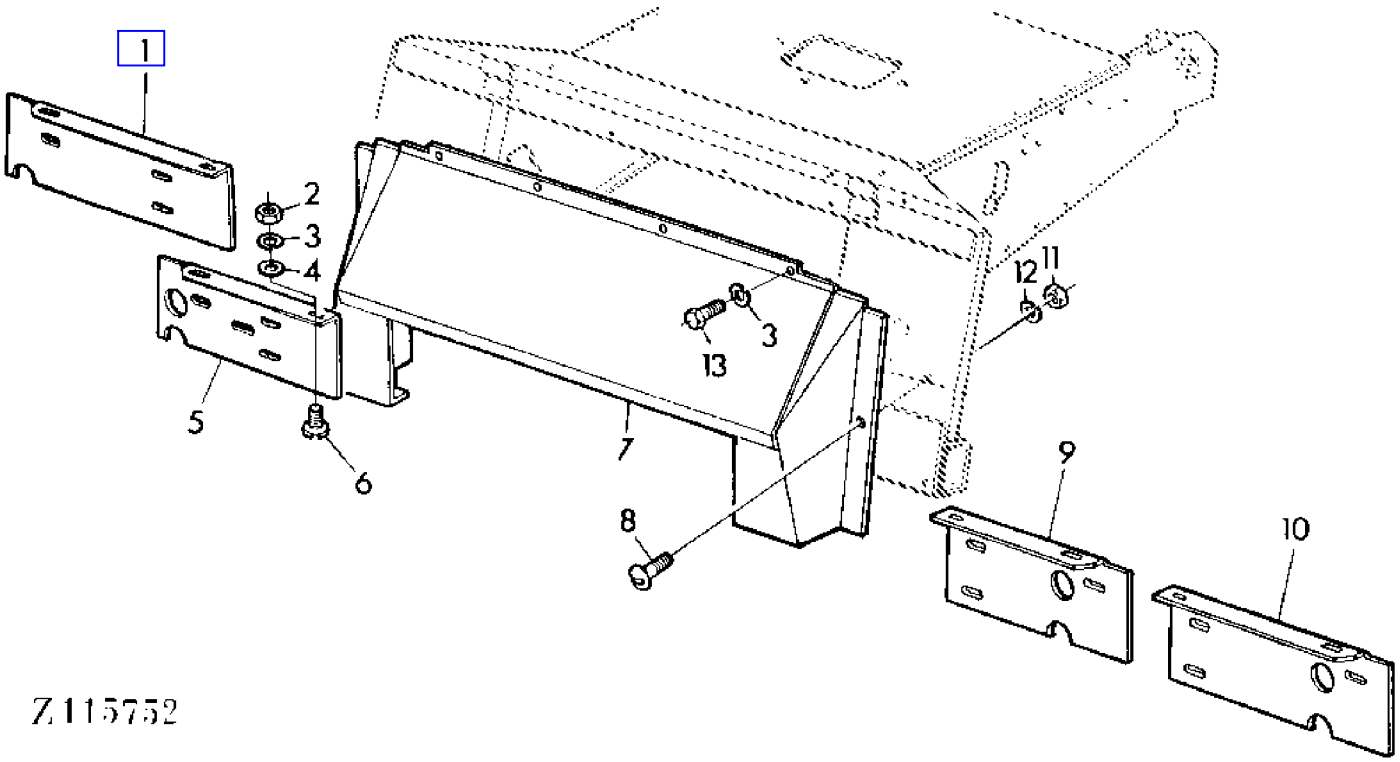

COPYRIGHT©1994 - 2008 DEERE & COMPANY Moline, Illinois All rights reserved

(3F16) DUST PROTECTION FOR FEEDER HOUSE
PARE-POUSSIERE DU CONVOYEUR D'ALIMENTATION
STAUBSCHUTZ FUER SCHRAEGFOERDERER
PARAPOIVERE PER COLLO ALIMENTATORE
PROTECCION CONTRA EL POLVO PARA EL ALIMENTADOR
DAMMSKYDD FOR INMATNINGSELEVATOR

KEY	PART NO.	PART NAME	QTY	SERIAL NO.	955	REMARKS
1	Z51990	STRIPPER	1		X	(A)
2	14M7029	NUT	AR		X	M8
3	12M7008	LOCK WASHER	AR		X	8MM
4	24M7036	WASHER	AR		X	9MM
5	Z51952	STRIPPER	1		X	
	Z51954	STRIPPER	1		X	(A)
6	21M7160	SCREW	AR		X	M8X18
7	AZ38085	GUARD	1		X	
8	21M7031	SCREW	AR		X	M6X15
9	Z51951	STRIPPER	1		X	
	Z51953	STRIPPER	1		X	(A)
10	Z51989	STRIPPER	1		X	(A)
11	14M7027	NUT	AR		X	M6
12	12M7012	LOCK WASHER	AR		X	6MM
13	19M7284	CAP SCREW	AR		X	M8X18

(A) FOR FEEDER CONVEYOR LONG
POUR CONVOYEUR D'ALIMENTATION LONG
FUER LANGEN SCHRAEGFOERDERER
PER COLLO ALIMENTATORE LUNGO
PARA ELEVADOR DE MIES LARGO
FOR INMATNINGSELEVATOR,LANG

COPYRIGHT©1994 - 2008 DEERE & COMPANY Moline, Illinois All rights reserved

(1F16) ELECTRICAL COMPONENTS-HYDROSTATIC REEL DRIVE
ELEMENTS ELECTRIQUES-ENTRAINEMENT HYDROST.DU RABATTEUR
ELEKTRISCHE AUSRUESTUNG-HYDROSTATISCHER HASPELANTRIEB
ELEMENTI ELETTR.COMANDO IDROSTAT.DELL'ASPO
COMPONENTES ELECTR.MANDO HIDROSTAT.DEL MOLINETE
ELEKTRISK UTRUSTNING FOR HYDROSTATISK HASPELDRIVNING

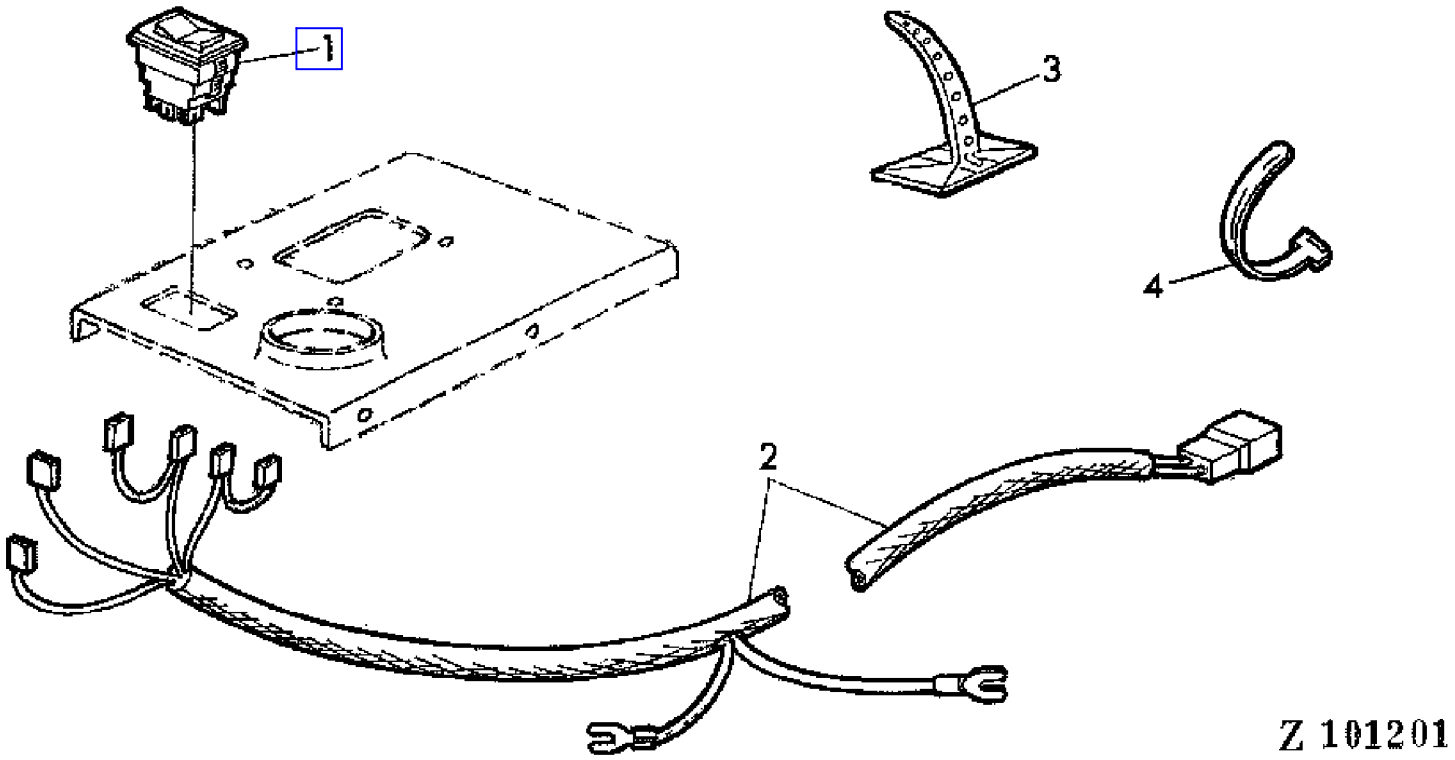

COPYRIGHT©1994 - 2008 DEERE & COMPANY Moline, Illinois All rights reserved

(1F16) ELECTRICAL COMPONENTS-HYDROSTATIC REEL DRIVE
ELEMENTS ELECTRIQUES-ENTRAINEMENT HYDROST.DU RABATTEUR
ELEKTRISCHE AUSRUESTUNG-HYDROSTATISCHER HASPELANTRIEB
ELEMENTI ELETTR.COMANDO IDROSTAT.DELL'ASPO
COMPONENTES ELECTR.MANDO HIDROSTAT.DEL MOLINETE
ELEKTRISK UTRUSTNING FOR HYDROSTATISK HASPELDRIVNING

KEY	PART NO.	PART NAME	QTY	SERIAL NO.	955	REMARKS
1	AZ30379	TOGGLE SWITCH	1		X	
2	AZ30602	WIRING HARNESS	1		X	
3	Z36647	CLAMP	AR		X	
4	Z31799	CLAMP	AR		X	(SUB FOR Z34567)

COPYRIGHT©1994 - 2008 DEERE & COMPANY Moline, Illinois All rights reserved

(1E02) ELECTRICAL FUEL TRANSFER PUMP
POMPE D'ALIMENTATION ELECTRIQUE
ELEKTRISCHE KRAFTSTOFFOERDERPUMPE
POMPA ALIMENTAZIONE ELETTRICA
BOMBA ELECTRICA DE ALIMENTACION DE COMBUSTIBLE
ELEKTRISK BRAENSLEPUMP

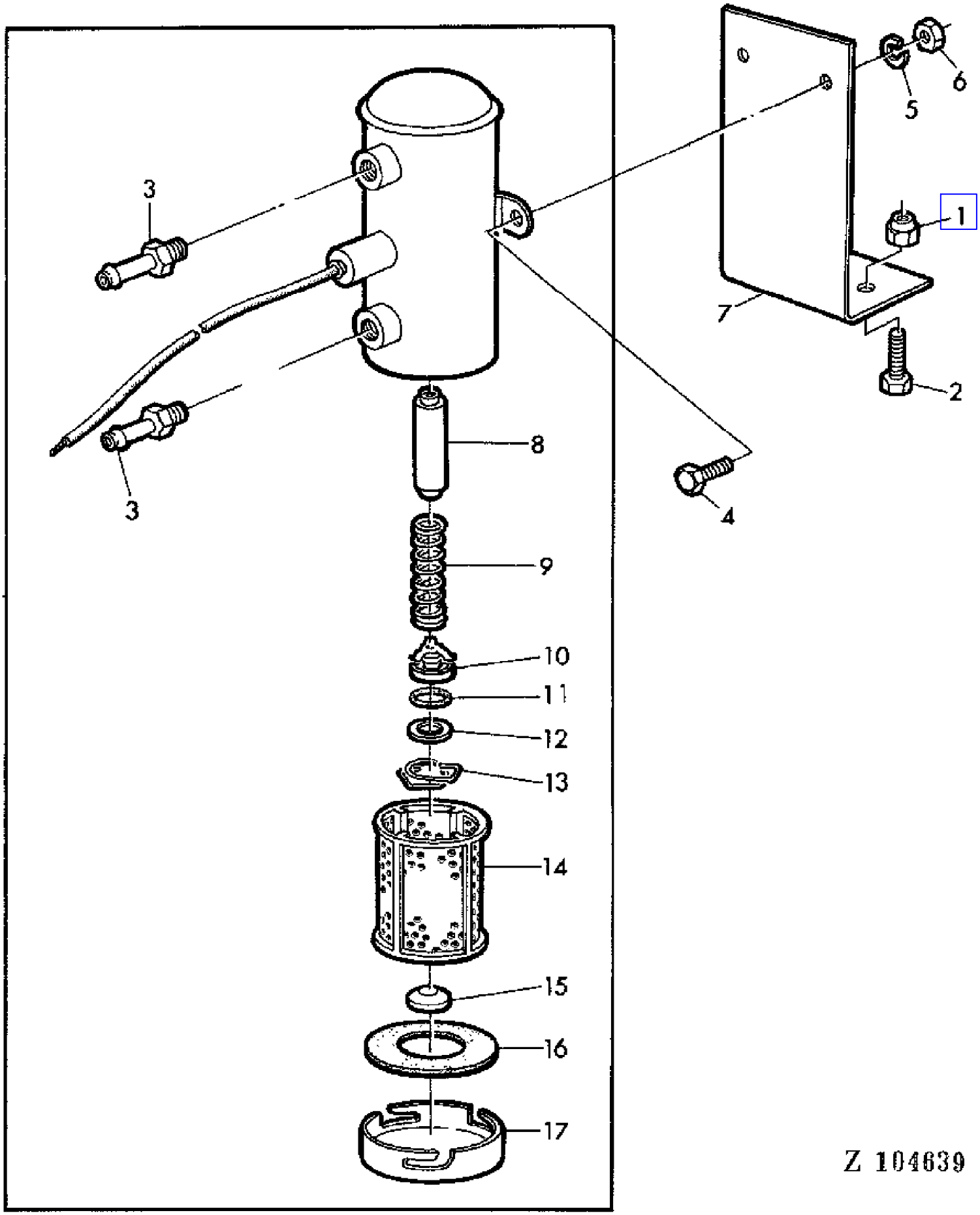

COPYRIGHT©1994 - 2008 DEERE & COMPANY Moline, Illinois All rights reserved

(1E02) ELECTRICAL FUEL TRANSFER PUMP
POMPE D'ALIMENTATION ELECTRIQUE
ELEKTRISCHE KRAFTSTOFFOERDERPUMPE
POMPA ALIMENTAZIONE ELETTRICA
BOMBA ELECTRICA DE ALIMENTACION DE COMBUSTIBLE
ELEKTRISK BRAENSLEPUMP

KEY	PART NO.	PART NAME	QTY	SERIAL NO.		955	REMARKS
1	14M7167	LOCK NUT	2	015898	-	X	M10
2	19M7169	CAP SCREW	2	015898	-	X	M10X35
3	Z36816	THREADED NIPPLE	2	015898	-	X	
4	19M7375	CAP SCREW	2	015898	-	X	M6X18
5	12M7012	LOCK WASHER	2	015898	-	X	6MM
6	14M7027	NUT	2	015898	-	X	M6
7	Z44276	RETAINER	1	015898	-	X	(SUB FOR Z36818)
8	AZ27952	FOLLOWER	1	015898	-	X	(SUB FOR AH66236)
9	R57443	SPRING	1	015898	-	X	
10	AH66237	GUIDE	1	015898	-	X	ASSY
11	H65169	O-RING	1	015898	-	X	
12	H65163	WASHER	1	015898	-	X	
13	H65168	CLAMP	1	015898	-	X	
14	Z39600	FUEL FILTER	1	015898	-	X	(SUB FOR H65167)
15	H65162	MAGNET	1	015898	-	X	
16	H65166	WASHER	1	015898	-	X	
17	H65164	COVER	1	015898	-	X	
18	AR67543	FUEL PUMP	1			X	(ORD AZ27951)
	AZ27951	FUEL PUMP	1	015898	-	X	

COPYRIGHT©1994 - 2008 DEERE & COMPANY Moline, Illinois All rights reserved

(1F02) ELECTRICAL GROUND SPEED INDICATOR
INDICATEUR ELECTRIQUE DE VITESSE
ELEKTRISCHE FAHRGESCHWINDIGKEITSANZEIGE
INDICATORE ELETTRICO DI VELOCITA
INDICADOR ELECTRICO DE LA VELOCIDAD DE MARCHA
ELEKTRISK KORHASTIGHETSMATARE

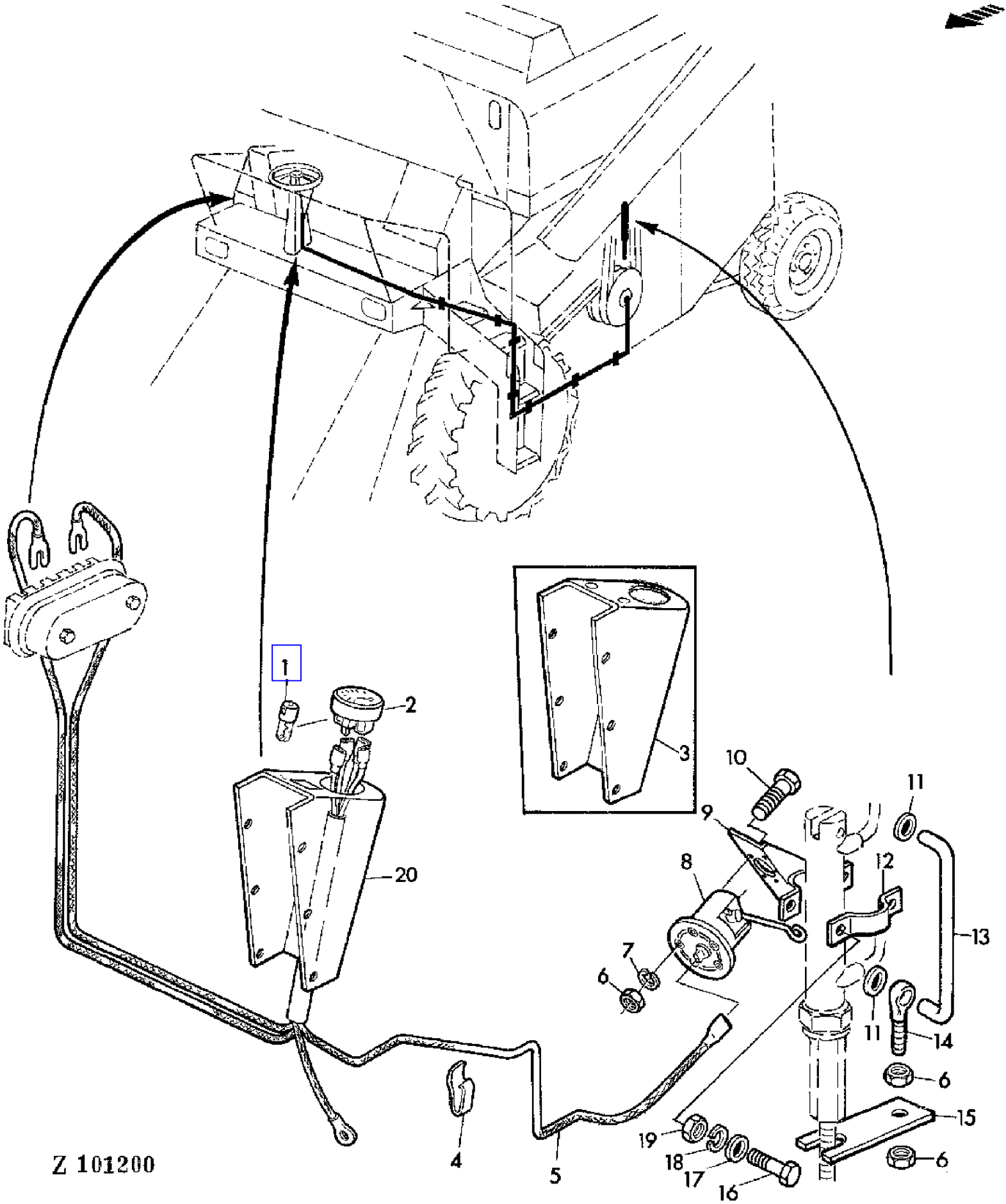

COPYRIGHT©1994 - 2008 DEERE & COMPANY Moline, Illinois All rights reserved

(1F02) ELECTRICAL GROUND SPEED INDICATOR
INDICATEUR ELECTRIQUE DE VITESSE
ELEKTRISCHE FAHRGESCHWINDIGKEITSANZEIGE
INDICATORE ELETTRICO DI VELOCITA
INDICADOR ELECTRICO DE LA VELOCIDAD DE MARCHA
ELEKTRISK KORHASTIGHETSMATARE

KEY	PART NO.	PART NAME	QTY	SERIAL NO.			955	REMARKS
1	57M6343	BULB	1	016668	-		X	
2	AZ24217	GAUGE	1	016668	-		X	
3	Z35548	HOUSING	1	016668	-	034662	X	(ORD Z41947)
4	Z24278	CLAMP	7	016668	-		X	
5	AZ24214	WIRING HARNESS	1	016668	-		X	
6	14M7028	NUT	7	016668	-		X	M5
7	12M7011	LOCK WASHER	5	016668	-		X	5MM
8	AZ37394	SENDER	1	016668	-		X	(SUB FOR AZ25793)
9	AZ25789	HOLDER	1	016668	-		X	
10	19M7372	CAP SCREW	5	016668	-		X	M5X16
11	Z35553	CLIP	2	016668	-		X	
12	Z36826	CLAMP	1	016668	-		X	
13	Z36827	PIN	1	016668	-		X	
14	Z36576	EYEBOLT	1	016668	-		X	
15	Z36828	STRAP	1	016668	-		X	
16	19M7159	CAP SCREW	2	016668	-		X	M6X15
17	24M7088	WASHER	2	016668	-		X	6MM
18	12M7012	LOCK WASHER	2	016668	-		X	6MM
19	14M7027	NUT	2	016668	-		X	M6
20	Z41947	CASE	1	034663	-		X	(SUB FOR Z35548)

COPYRIGHT©1994 - 2008 DEERE & COMPANY Moline, Illinois All rights reserved

(3E08) ELECTRICAL SYSTEM-AIR CONDITIONED CAB
EQUIPEMENT ELECTRIQUE-CABINE CLIMATISEE
ELEKTRIK-KABINE MIT KLIMAANLAGE
IMPIANTO ELETTRICO-CABINA CONDIZIONATA
SISTEMA ELECTRICO-CABINA CON AIRE ACONDICIONADO
EL-SYSTEM-HYTT MED LUFTKONDITIONERING

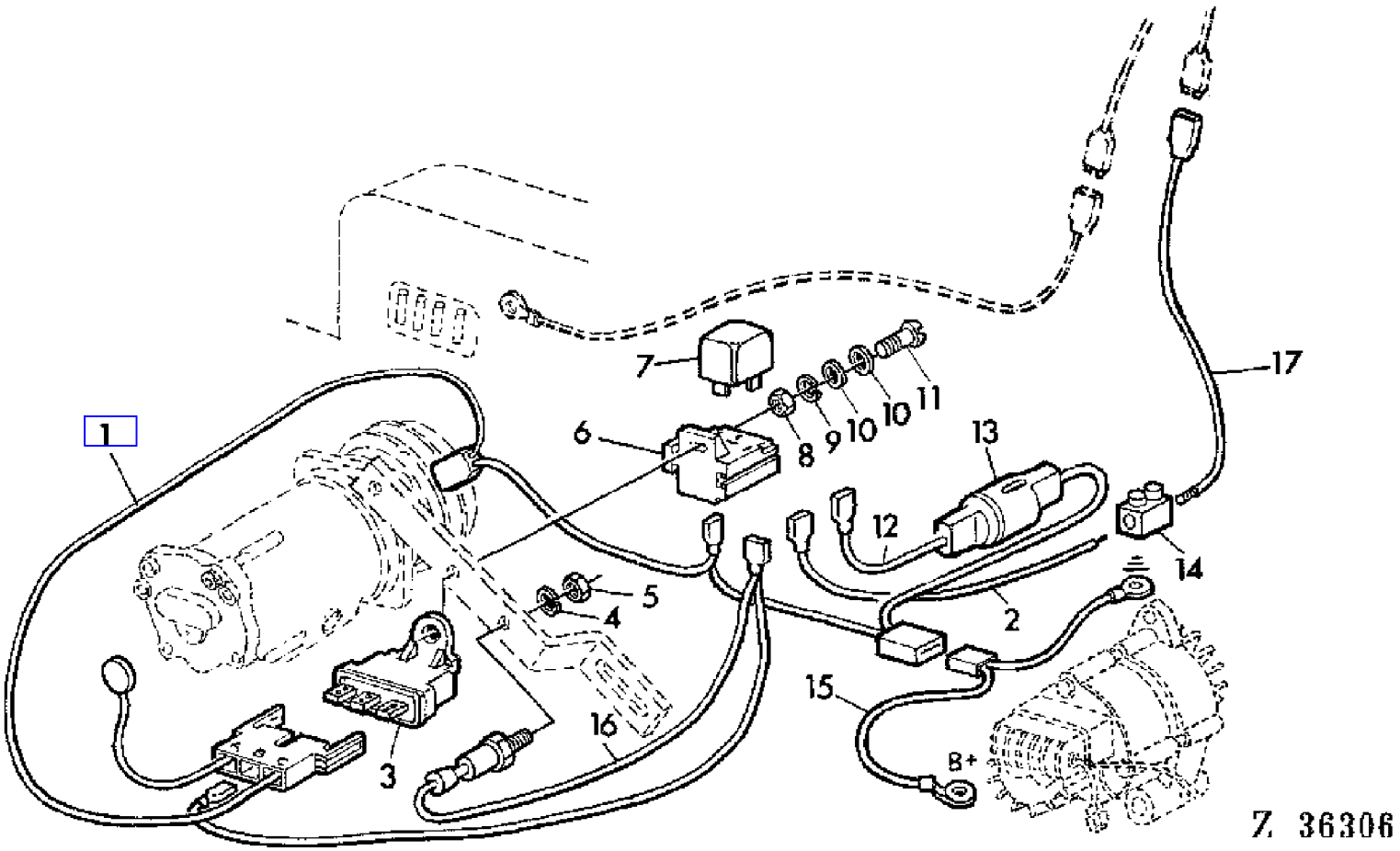

COPYRIGHT©1994 - 2008 DEERE & COMPANY Moline, Illinois All rights reserved

(3E08) ELECTRICAL SYSTEM-AIR CONDITIONED CAB
EQUIPEMENT ELECTRIQUE-CABINE CLIMATISEE
ELEKTRIK-KABINE MIT KLIMAANLAGE
IMPIANTO ELETTRICO-CABINA CONDIZIONATA
SISTEMA ELECTRICO-CABINA CON AIRE ACONDICIONADO
EL-SYSTEM-HYTT MED LUFTKONDITIONERING

KEY	PART NO.	PART NAME	QTY	SERIAL NO.	955	REMARKS
1	AZ29056	WIRING HARNESS	1		X	(SUB FOR AR77345)
2	AZ29062	WIRING LEAD	1		X	(SUB FOR DA21755)
3	AR77344	FUSE	1		X	
4	12M7011	LOCK WASHER	1		X	5MM
5	14M7028	NUT	1		X	M5
6	AZ26995	RECEPTACLE CONNECTOR BODY	1		X	
7	AZ26996	RELAY	1		X	
8	14M7139	NUT	1		X	M4
9	12M7031	LOCK WASHER	1		X	4MM
10	24M7117	WASHER	2		X	4,3MM
11	21M7033	SCREW	1	XXXX -	X	AR, M4X16
12	AZ29063	POWER CORD	1		X	
13	AZ29064	FUSE HOLDER	1		X	
14	AZ29273	TERMINAL	1		X	
15	AZ29059	WIRING HARNESS	1		X	
16	AZ29061	WIRING HARNESS	1		X	
17	CA20348	POWER CORD	1		X	

COPYRIGHT©1994 - 2008 DEERE & COMPANY Moline, Illinois All rights reserved

(3E10) ELECTRICAL SYSTEM-AIR CONDITIONED CAB
EQUIPEMENT ELECTRIQUE-CABINE CLIMATISEE
ELEKTRIK-KABINE MIT KLIMAANLAGE
IMPIANTO ELETTRICO-CABINA CONDIZIONATA
SISTEMA ELECTRICO-CABINA CON AIRE ACONDICIONADO
EL-SYSTEM-HYTT MED LUFTKONDITIONERING

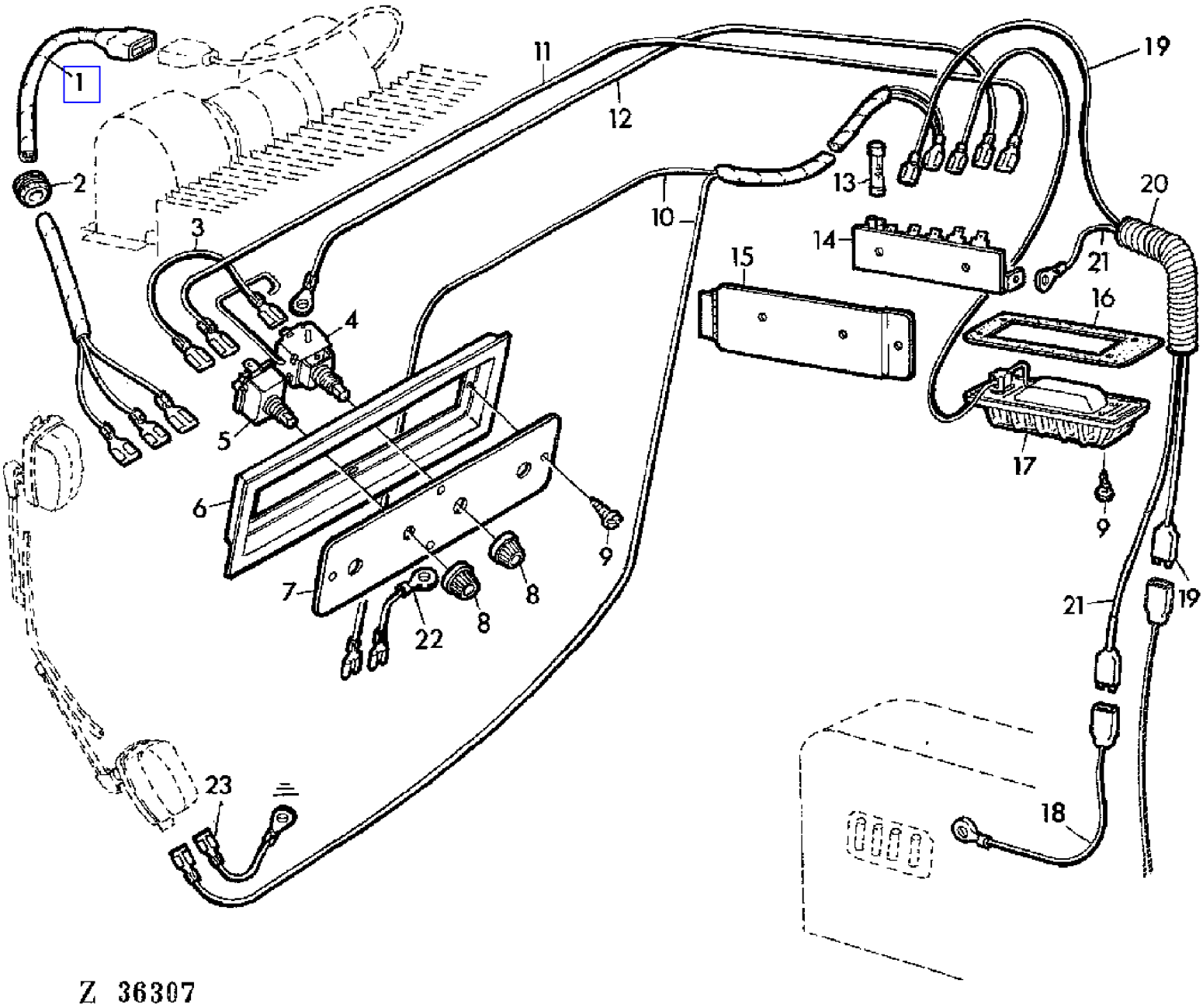

COPYRIGHT©1994 - 2008 DEERE & COMPANY Moline, Illinois All rights reserved

(3E10) ELECTRICAL SYSTEM-AIR CONDITIONED CAB
EQUIPEMENT ELECTRIQUE-CABINE CLIMATISEE
ELEKTRIK-KABINE MIT KLIMAANLAGE
IMPIANTO ELETTRICO-CABINA CONDIZIONATA
SISTEMA ELECTRICO-CABINA CON AIRE ACONDICIONADO
EL-SYSTEM-HYTT MED LUFTKONDITIONERING

KEY	PART NO.	PART NAME	QTY	SERIAL NO.	955	REMARKS
1	AH80182	WIRING HARNESS	1		X	
2	H81679	GROMMET	1		X	
3	AH88879	WIRING LEAD	1		X	
4	AH80197	SWITCH	1		X	
5	AH84588	SWITCH	1		X	
6	H85835	HOUSING	1		X	
7	AH80690	PANEL	1		X	
8	AH80168	KNOB	2		X	
9	37H1	SCREW	4		X	
10	DA20345	WIRING HARNESS	1		X	
11	AH84586	WIRING LEAD	1		X	
12	AH88880	WIRING LEAD	1		X	
13	AH80089	FUSE	AR		X	7,5AMP, KIT
	AH80711	FUSE	AR		X	30AMP, KIT
14	AH80713	FUSE BOX	1		X	
15	AH80521	DOOR	1		X	
16	H84109	GASKET	1		X	
17	AH80210	LAMP	1		X	
18	CA20346	CABLE	1		X	
19	AH88883	WIRING LEAD	1		X	
20	H88857	CONDUIT	1		X	OD = 33/64" 13MM, LGTH = 120" 3048 MM
21	AH80340	WIRE	1		X	
22	CA19447	POWER CORD	1		X	
23	CA19446	CABLE	1		X	

COPYRIGHT©1994 - 2008 DEERE & COMPANY Moline, Illinois All rights reserved

(3D04) ELECTRICAL WIRING-OPERATOR'S CAB
FAISCEAU DE CABINE
VERKABELUNG DER KABINE
CABLAGGIO-CABINA
CABLEADO DE LA CABINA
KABELNAET-FOERARHYTT

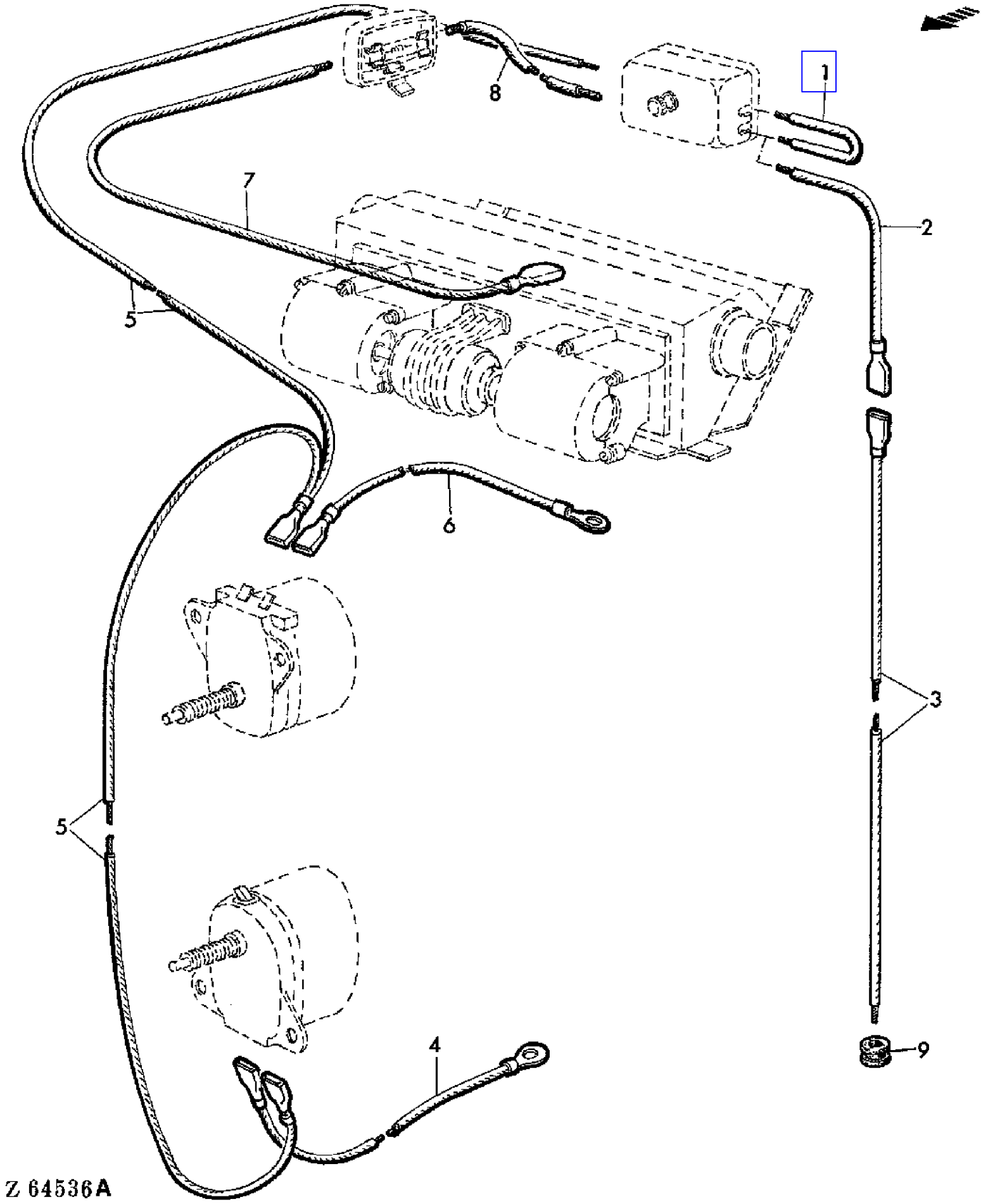

COPYRIGHT©1994 - 2008 DEERE & COMPANY Moline, Illinois All rights reserved

(3D04) ELECTRICAL WIRING-OPERATOR'S CAB
FAISCEAU DE CABINE
VERKABELUNG DER KABINE
CABLAGGIO-CABINA
CABLEADO DE LA CABINA
KABELNAET-FOERARHYTT

KEY	PART NO.	PART NAME	QTY	SERIAL NO.	955	REMARKS
1	CA19448	CABLE	1		X	LGTH = 50 MM
2	CA20347	CABLE	1		X	LGTH = 100 MM
3	CA20346	CABLE	1		X	LGTH = 1600 MM (ORD W/ CA20347) (SUB FOR CA19444)
4	CA19446	CABLE	1		X	LGTH = 700 MM
5	CA19970	WIRING HARNESS	1		X	LGTH = 1885MM/3315 MM (SUB FOR CA19442)
6	CA19447	POWER CORD	1		X	LGTH = 415 MM
7	CA19445	WIRING LEAD	1		X	LGTH = 1200 MM
8	CA19443	POWER CORD	1		X	LGTH = 625 MM
9	Z21238	GROMMET	4		X	

COPYRIGHT©1994 - 2008 DEERE & COMPANY Moline, Illinois All rights reserved

(3D12) ELECTRO CLUTCH - AIR CONDITIONED CAB
EMBRAYAGE ELECTROMAGNETIQUE - CABINE CLIMATISEE
ELEKTROKUPPLUNG - KABINE MIT KLIMAANLAGE
FRIZIONE ELETTROMAGNETICA - CABINA CONDIZIONATA
EMBRAGNE ELECTRONICO - CABINA CON AIRE ACONDICIONADO
ELEKTROKOPPLING - HYTT MED LUFTKONDITIONERING

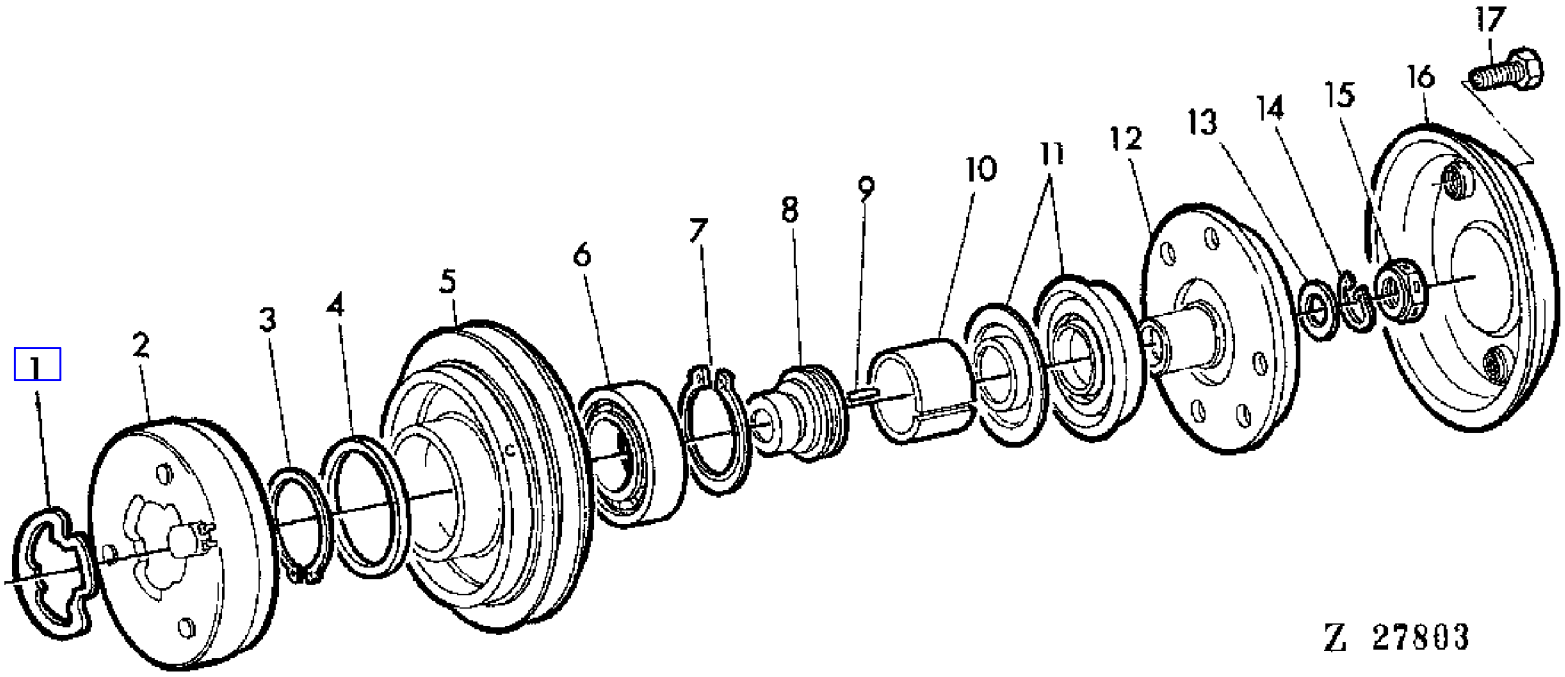

COPYRIGHT©1994 - 2008 DEERE & COMPANY Moline, Illinois All rights reserved

(3D12) ELECTRO CLUTCH - AIR CONDITIONED CAB
EMBRAYAGE ELECTROMAGNETIQUE - CABINE CLIMATISEE
ELEKTROKUPPLUNG - KABINE MIT KLIMAANLAGE
FRIZIONE ELETTROMAGNETICA - CABINA CONDIZIONATA
EMBRAGNE ELECTRONICO - CABINA CON AIRE ACONDICIONADO
ELEKTROKOPPLING - HYTT MED LUFTKONDITIONERING

KEY	PART NO.	PART NAME	QTY	SERIAL NO.	955	REMARKS
1	R56246	GASKET	1		X	(ORD W/ AR71289)
2	AR49803	ELECTRICAL COIL	1		X	(ORD W/ AR71289)
3	R47224	SNAP RING	1		X	(ORD W/ AR71289)
4	R54766	WASHER	1		X	(ORD W/ AR71289)
5	AR71287	PULLEY	1		X	INCL KEYS 4,6,11
6	AR71288	BALL BEARING	1		X	
7	R47226	SNAP RING	1		X	(ORD W/ AR71289)
8	AR71285	KIT	1		X	KIT, INCL KEY 11
9	R47229	SHAFT KEY	1		X	
10	R47227	SEAL	1		X	(ORD W/ AR71289)
11	AR71289	SHIELD	1		X	
12	AR71286	CLUTCH	1		X	
13	R47230	WASHER	1		X	
14	R47231	SNAP RING	1		X	
15	R47232	NUT	1		X	
16	AR71290	COVER	1		X	
17	37H32	SCREW	3		X	

COPYRIGHT©1994 - 2008 DEERE & COMPANY Moline, Illinois All rights reserved

(4E12) ELEVATOR DRIVE TENSION DEVICE
TENDEUR ENTRAINEMENT ELEVATEUR
SPANNVORRICHTUNG DES ELEVATORANTRIEBES
TENDITORE DEL COMANDO ELEVATORE
PIEZAS TENSORAS PARA LA TRANSMISION DEL ELEVADOR
SPAENNANORDNING FOER ELEVATORDRIVNING

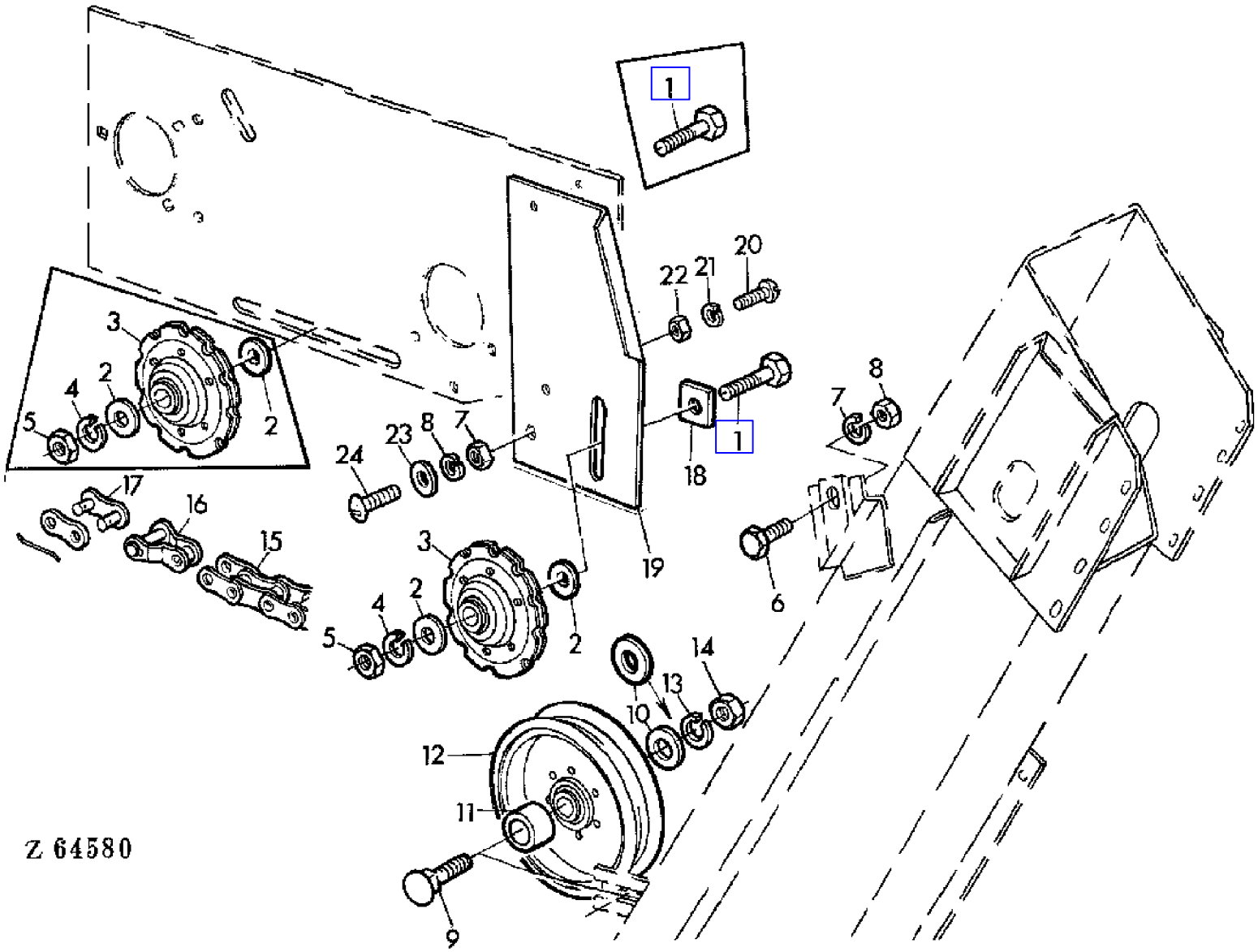

COPYRIGHT©1994 - 2008 DEERE & COMPANY Moline, Illinois All rights reserved

(4E12) ELEVATOR DRIVE TENSION DEVICE
TENDEUR ENTRAINEMENT ELEVATEUR
SPANNVORRICHTUNG DES ELEVATORANTRIEBES
TENDITORE DEL COMANDO ELEVATORE
PIEZAS TENSORAS PARA LA TRANSMISION DEL ELEVADOR
SPAENNANORDNING FOER ELEVATORDRIVNING

KEY	PART NO.	PART NAME	QTY	SERIAL NO.		955	REMARKS
1	19M7330	CAP SCREW	1			X	M12X55
2	24M7038	WASHER	2			X	14MM
3	AH15303	CHAIN SPROCKET	AR			X	
4	12M7014	LOCK WASHER	1			X	12MM
5	14M7031	NUT	1			X	M12
6	19M7167	CAP SCREW	1			X	M10X35
7	12M7013	LOCK WASHER	1			X	10MM
8	14M7140	NUT	1			X	M10
9	03M7080	BOLT	1			X	M16X70
10	24M7113	WASHER	2			X	17MM
11	Z29422	SPACER	1			X	
12	AP24917	IDLER	1			X	
13	12M7017	LOCK WASHER	1			X	16MM
14	14M7142	NUT	1			X	M16
15	AZ10362	LINK CHAIN	1		- 003150	X	L = 132, ASSY, INCL KEYS 16,17
	AZ23911	LINK CHAIN	1	003151	-	X	L = 127, ASSY, INCL KEYS 16,17
16	AL15953	LINK	1			X	
17	AL15954	LINK	1			X	
18	Z32642	PLATE	1			X	
19	Z34897	PLATE	1		- 017474	X	
	AZ27162	PLATE	1	017475	-	X	(SUB FOR Z34897)
20	21M7127	SCREW	1			X	M6X18
21	12M7012	LOCK WASHER	1			X	6MM
22	14M7027	NUT	1			X	M6
23	24M7040	WASHER	1			X	11MM
24	21M7162	SCREW	1			X	M10X20

COPYRIGHT©1994 - 2008 DEERE & COMPANY Moline, Illinois All rights reserved

(2F08) ENGINE COMPARTMENT FLOOR PANELS
FOND DU COMPARTIMENT MOTEUR
MOTOR-BODENBLECHE
LAMIERE DI FONDO MOTORE
CHAPAS DE FONDO (COMPARTIMENTO DEL MOTOR)
BOTTENPLATAR,MOTOR

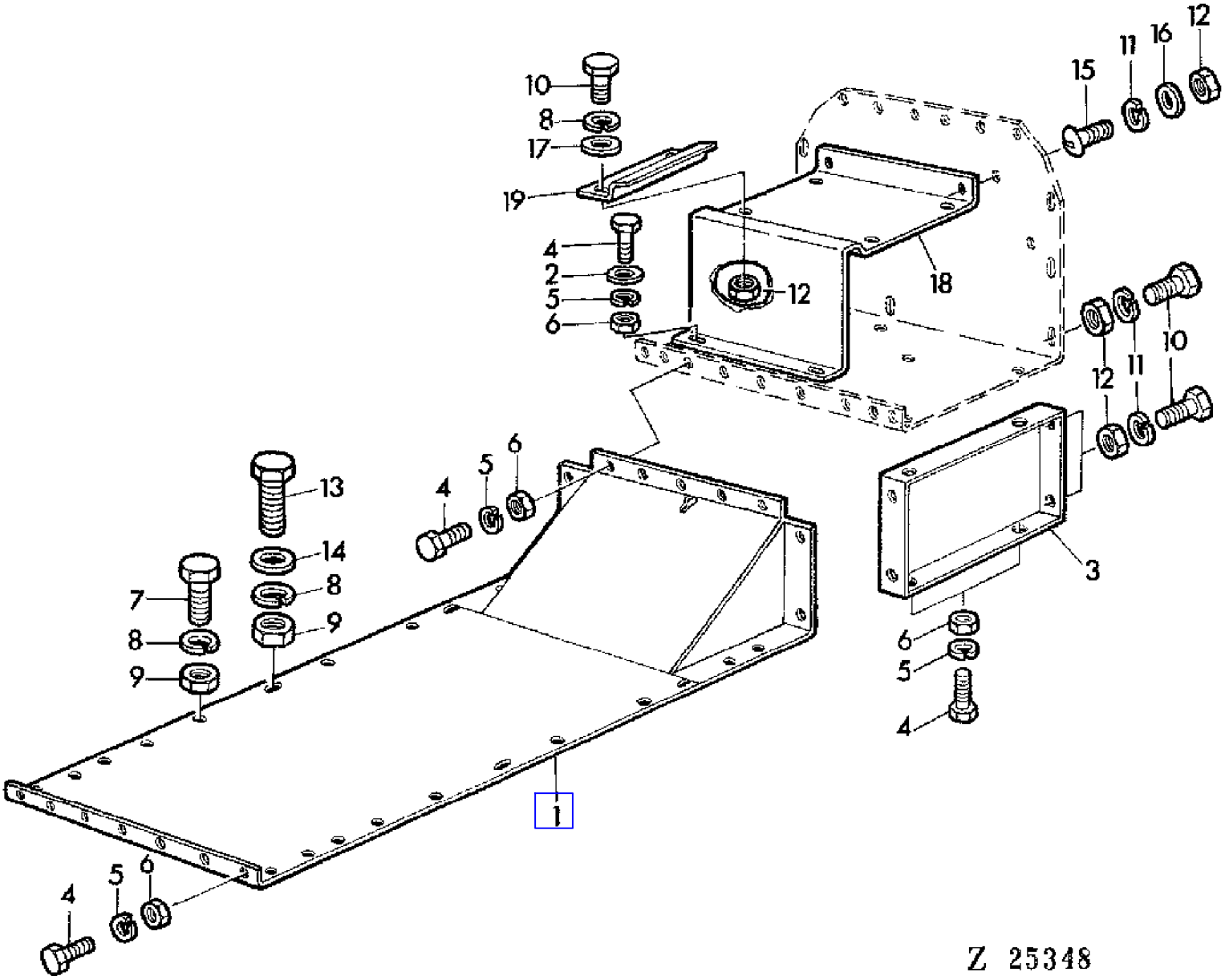

COPYRIGHT©1994 - 2008 DEERE & COMPANY Moline, Illinois All rights reserved

(2F08) ENGINE COMPARTMENT FLOOR PANELS
FOND DU COMPARTIMENT MOTEUR
MOTOR-BODENBLECHE
LAMIERE DI FONDO MOTORE
CHAPAS DE FONDO (COMPARTIMENTO DEL MOTOR)
BOTTENPLATAR,MOTOR

KEY	PART NO.	PART NAME	QTY	SERIAL NO.	955	REMARKS
1	AZ10717	PANEL	1		X	
2	24M7054	WASHER	AR		X	6,4MM
3	Z21382	SHEET	2		X	
4	19M7159	CAP SCREW	AR		X	M6X15
5	12M7012	LOCK WASHER	AR		X	6MM
6	14M7027	NUT	AR		X	M6
7	19M7166	CAP SCREW	AR		X	M10X20
8	12M7013	LOCK WASHER	AR		X	10MM
9	14M7140	NUT	AR		X	M10
10	19M7162	CAP SCREW	AR		X	M8X15
11	12M7008	LOCK WASHER	AR		X	8MM
12	14M7029	NUT	AR		X	M8
13	19M7167	CAP SCREW	AR		X	M10X25
14	24M7040	WASHER	AR		X	11MM
15	21M7081	SCREW	AR		X	M8X15
16	24M7036	WASHER	AR		X	9MM
17	24M7055	WASHER	AR		X	8,4MM
18	AZ21786	BRACKET	1		X	(ORD Z32842, (4) 14M7029)
	Z32842	HOLDER	1		X	
19	Z32841	RETAINER	2		X	

COPYRIGHT©1994 - 2008 DEERE & COMPANY Moline, Illinois All rights reserved

(1C02) ENGINE MAJOR OVERHAUL GASKET SET
JEU DE JOINTS REVISION MOTEUR
SATZ-DICHTUNGEN-MOTORUEBERHOLUNG
SERIE GUARNIZIONI PER RIPARAZIONE MOTORE
JUEGO DE JUNTAS PARA MOTORES
PACKNINGSSATS FOR MOTORRENOVERING

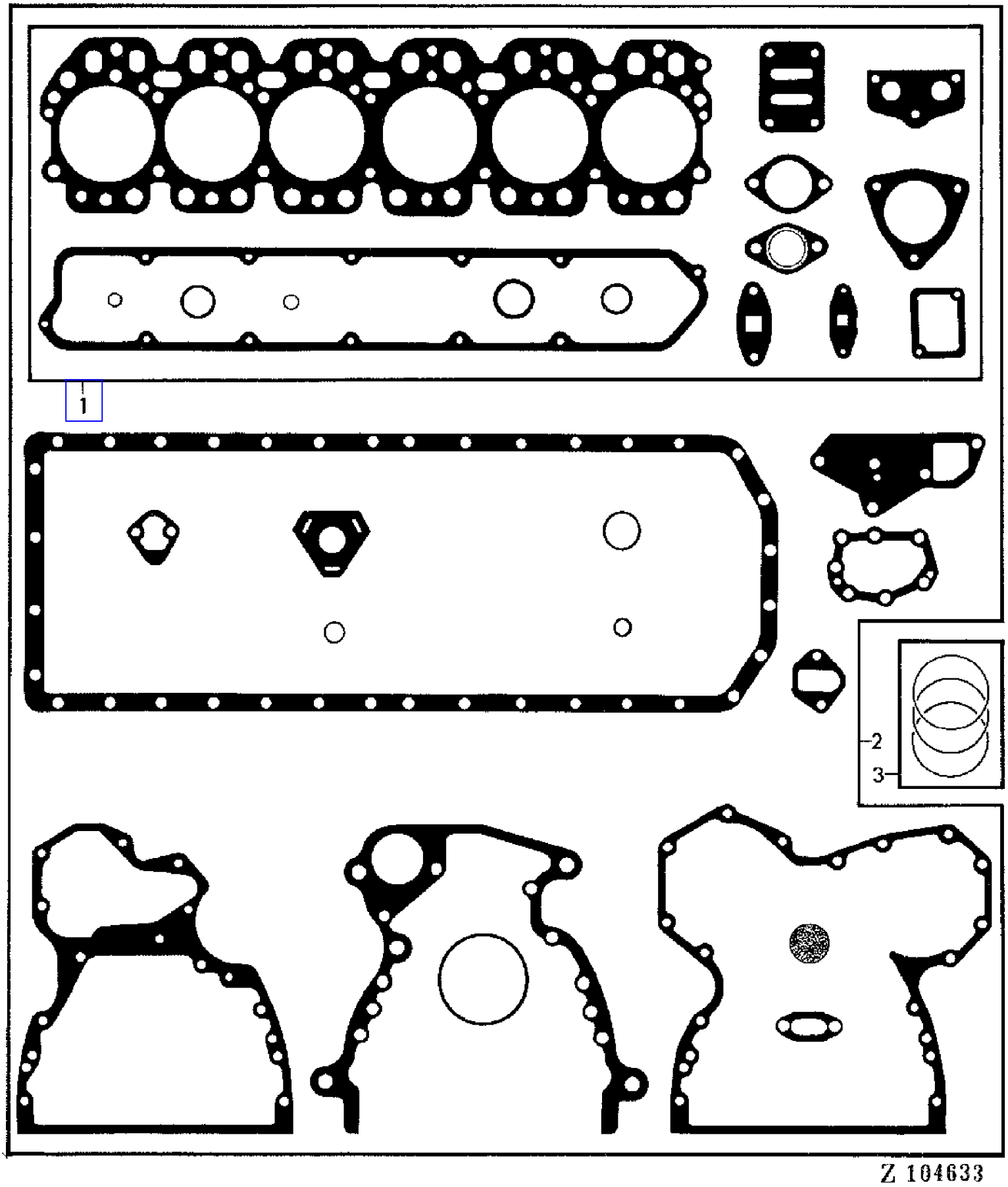

COPYRIGHT©1994 - 2008 DEERE & COMPANY Moline, Illinois All rights reserved

(1C02) ENGINE MAJOR OVERHAUL GASKET SET
JEU DE JOINTS REVISION MOTEUR
SATZ-DICHTUNGEN-MOTORUEBERHOLUNG
SERIE GUARNIZIONI PER RIPARAZIONE MOTORE
JUEGO DE JUNTAS PARA MOTORES
PACKNINGSSATS FOR MOTORRENOVERING

KEY	PART NO.	PART NAME	QTY	SERIAL NO.			955	REMARKS
1	AR71994	GASKET KIT	AR		-	583852	X	(ORD RE16924 W/ (12) AR100124)
	RE16924	GASKET KIT	AR	583853	-		X	KIT (SUB FOR AR102267)
2	AR97786	GASKET KIT	AR		-	583852	X	(ORD RE16925 W/ (12) AR100124, RE11036) (SUB FOR AR74367)
	RE16925	GASKET KIT	AR	583853	-		X	(ORD W/ AR67942, RE11036, (6) AR71618, OR (6) AR65507) (SUB FOR AR102268)
3	AR71618	KIT	6		-	377809	X	KIT (3) (SUB FOR DD13276)
	AR65507	O-RING KIT	6	377810	-		X	KIT (3) (SUB FOR AR68318)

COPYRIGHT©1994 - 2008 DEERE & COMPANY Moline, Illinois All rights reserved

(1B15) ENGINE OIL COOLER
REFROIDISSEUR DIHUILE MOTEUR
MOTOR-OELKUEHLER
RAFFREDDATORE OLIO MOTORE
REFRIGERADOR DEL ACEITE DEL MOTOR
MOTOROLJEKYLARE

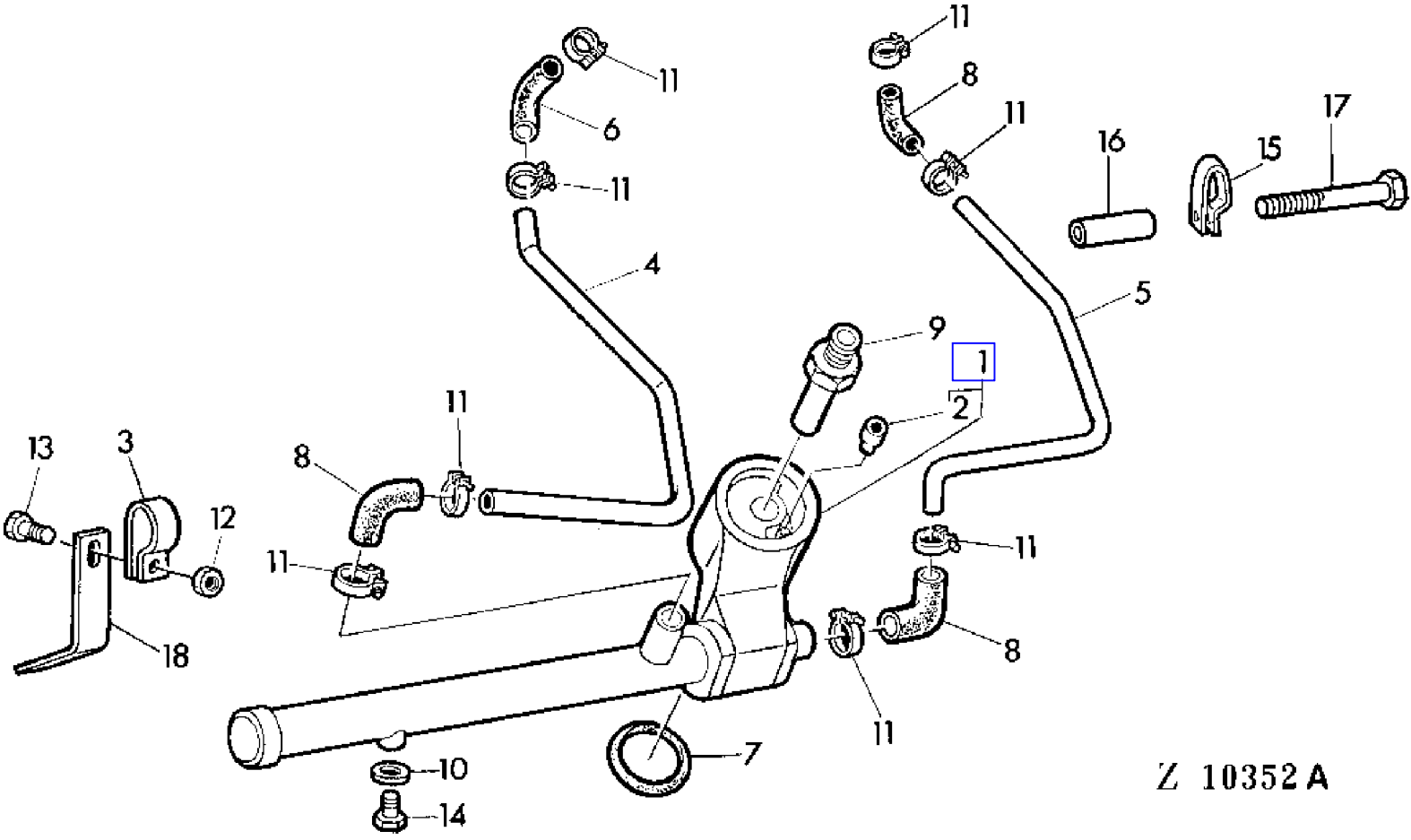

COPYRIGHT©1994 - 2008 DEERE & COMPANY Moline, Illinois All rights reserved

(PC4146) 955 Combine

(1B15) ENGINE OIL COOLER
REFROIDISSEUR DIHUILE MOTEUR
MOTOR-OELKUEHLER
RAFFREDDATORE OLIO MOTORE
REFRIGERADOR DEL ACEITE DEL MOTOR
MOTOROLJEKYLARE

KEY	PART NO.	PART NAME	QTY	ENGINE SERIAL NO.	955	REMARKS
1	AR67607	OIL COOLER	1	- 364277	X	ASSY, INCL KEYS 2,10,14 (ORD RE12261)
2	AT31093	VALVE	1	- 364277	X	
3	L4867T	CLIP	1	- 364277	X	
4	R55413	PIPE	1	- 364277	X	
5	R55412	PIPE	1	- 364277	X	
6	R48989	HOSE	1	- 364277	X	
7	R53543	O-RING	1	- 364277	X	
8	T22942	HOSE	3	- 364277	X	
9	T31306	THREADED NIPPLE	1	- 364277	X	
10	R56703	WASHER	1	- 364277	X	
11	AR21837	CLAMP	8	- 364277	X	
12	14H785	NUT	1	- 364277	X	5/16"
13	19H1900	CAP SCREW	1	- 364277	X	5/16"X3/4"
14	19H2479	CAP SCREW	1	- 364277	X	1/4"X3/8"
15	R53524	CLAMP	1	- 364277	X	
16	T20280	WASHER	1	- 364277	X	
17	19H1733	CAP SCREW	1	- 364277	X	3/8"X2-1/2"
18	R55414	RETAINER	1	- 364277	X	

COPYRIGHT©1994 - 2008 DEERE & COMPANY Moline, Illinois All rights reserved

(1B16) ENGINE OIL COOLER
REFROIDISSEUR D'HUILE MOTEUR
MOTOR-OELKUEHLER
RAFFREDDATORE OLIO MOTORE
REFRIGERADOR DEL ACEITE DEL MOTOR
MOTOROLJEKYLARE

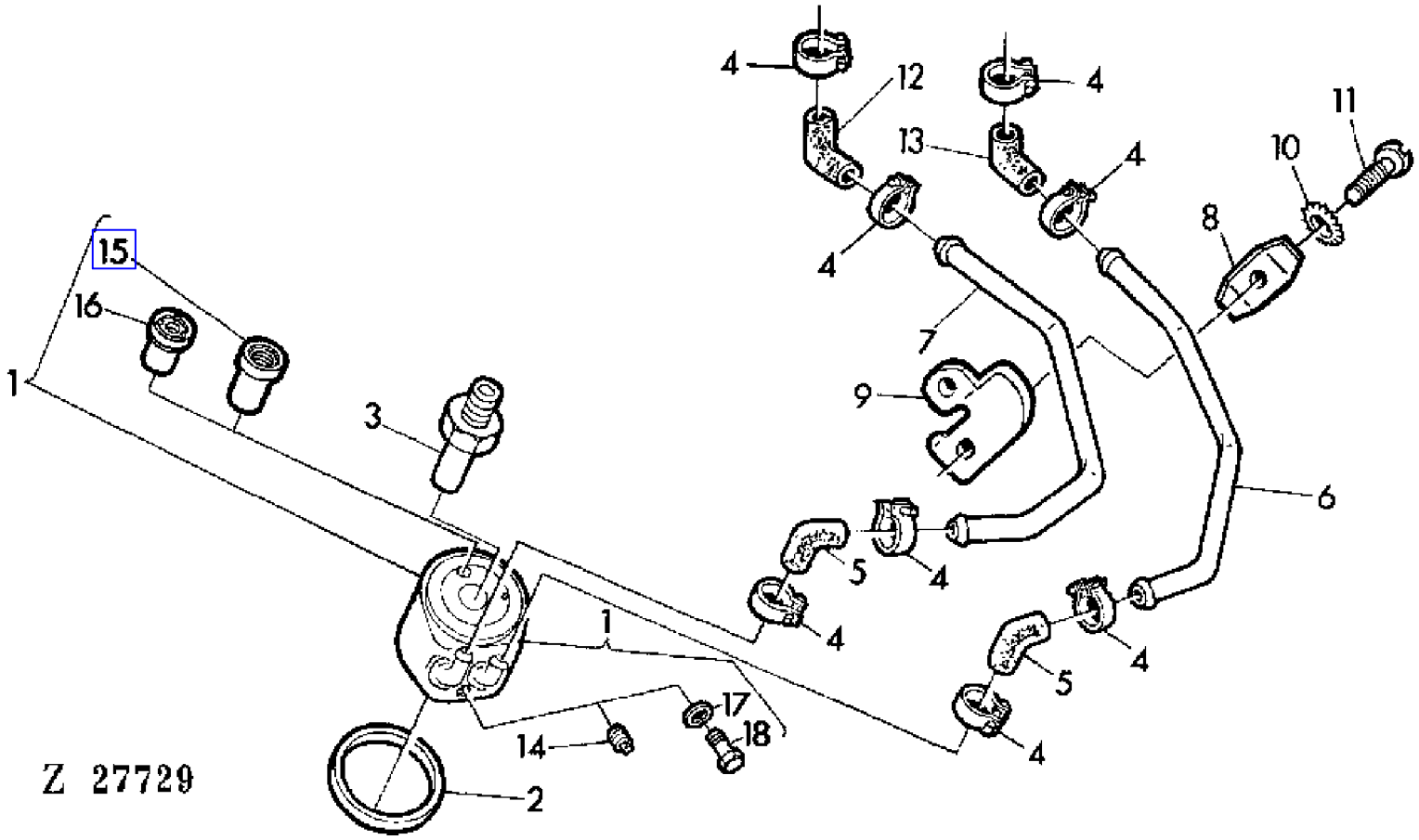

COPYRIGHT©1994 - 2008 DEERE & COMPANY Moline, Illinois All rights reserved

(1B16) ENGINE OIL COOLER
REFROIDISSEUR D'HUILE MOTEUR
MOTOR-OELKUEHLER
RAFFREDDATORE OLIO MOTORE
REFRIGERADOR DEL ACEITE DEL MOTOR
MOTOROLJEKYLARE

KEY	PART NO.	PART NAME	QTY	ENGINE SERIAL NO.			955	REMARKS
1	AR98852	OIL COOLER	AR	364278	-	498385	X	ASSY, INCL KEYS 16-18, BEHR (ORD RE14448 W/ R78290, R70956, (2) AT18904, (2) R79691) (SUB FOR AR64415)
2	R70956	WASHER	1	364278	-	498385	X	(SUB FOR R55434)
3	T31306	THREADED NIPPLE	1	364278	-	498385	X	
4	AR21837	CLAMP	8	364278	-	498385	X	
5	R55127	HOSE	2	364278	-	498385	X	
6	R55126	PIPE	1	364278	-	498385	X	
7	R55125	PIPE	1	364278	-	498385	X	
8	R60203	CLAMP	1	364278	-	498385	X	
9	R60204	CLAMP	1	364278	-	498385	X	
10	12H295	LOCK WASHER	2	364278	-	498385	X	NO.10
11	21H1312	SCREW	2	364278	-	498385	X	NO.10X1"
12	T22942	HOSE	1	364278	-	498385	X	
13	R48989	HOSE	1	364278	-	498385	X	
14	R56947	DRAIN PLUG	1	364278	-	498385	X	(W/ AR64415)
15	AT31093	VALVE	1	364278	-	498385	X	(W/ AR64415)
16	AR98853	VALVE	1	364278	-	498385	X	(W/ AR98852)
17	51M7012	RING	1	364278	-	498385	X	(W/ AR98852) (SUB FOR CD15227)
18	15M2714	DRAIN PLUG	1	364278	-	498385	X	(W/ AR98852)
..	RE12261	KIT	AR				X	KIT, INCL KEYS 1,2,4-13

COPYRIGHT©1994 - 2008 DEERE & COMPANY Moline, Illinois All rights reserved

(1B17) ENGINE OIL COOLER
REFROIDISSEUR D'HUILE MOTEUR
MOTOR-OELKUEHLER
DISPOSITIVO RAFFREDDAMENTO OLIO
REFRIGERADOR DEL ACEITE DEL MOTOR
MOTOROLJEKYLARE

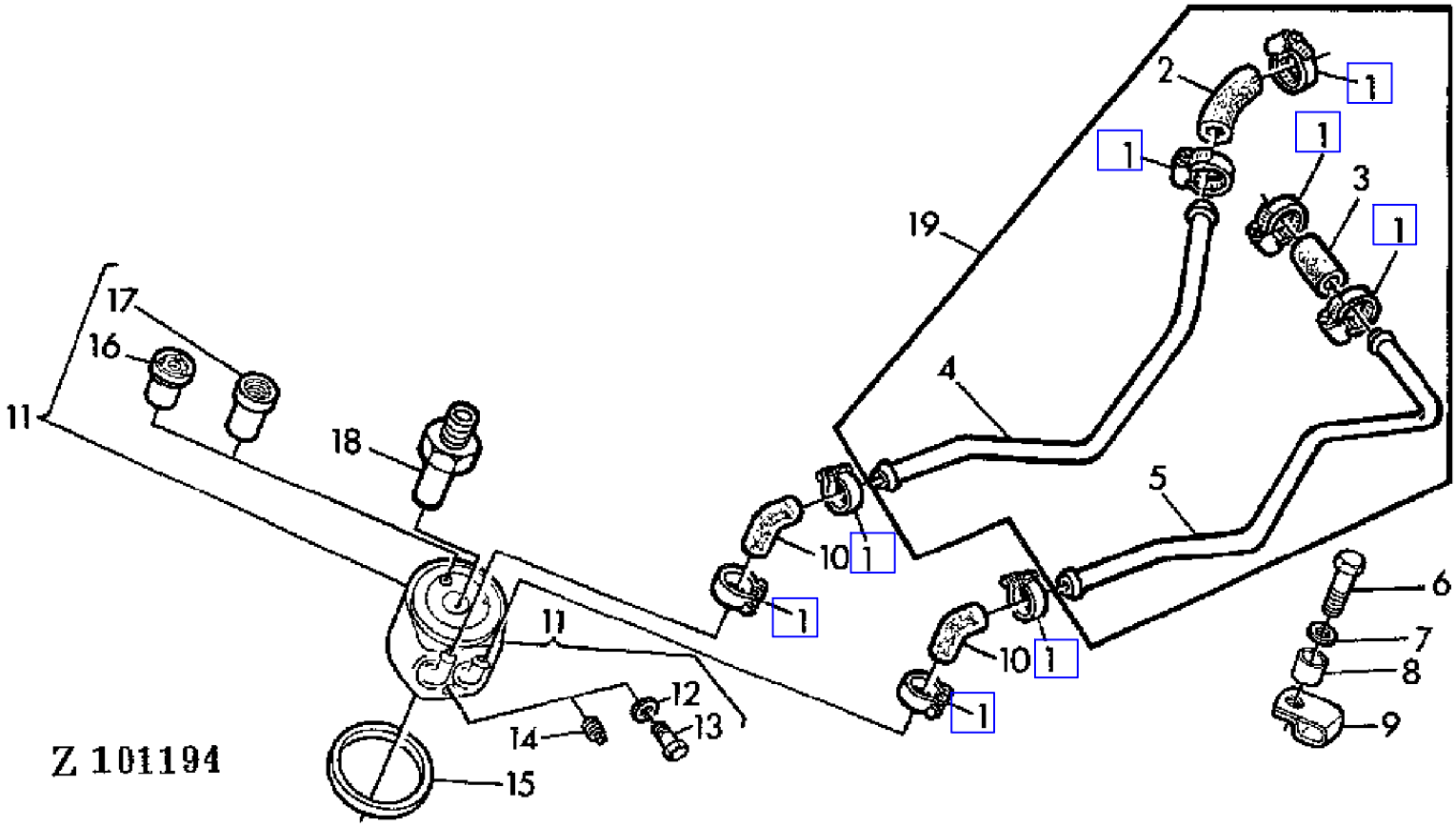

COPYRIGHT©1994 - 2008 DEERE & COMPANY Moline, Illinois All rights reserved

(1B17) ENGINE OIL COOLER
REFROIDISSEUR D'HUILE MOTEUR
MOTOR-OELKUEHLER
DISPOSITIVO RAFFREDDAMENTO OLIO
REFRIGERADOR DEL ACEITE DEL MOTOR
MOTOROLJEKYLARE

KEY	PART NO.	PART NAME	QTY	ENGINE SERIAL NO.			955	REMARKS
1	AR21837	CLAMP	8	498386	-		X	
2	R70608	HOSE	1	498386	-		X	
3	.....	HOSE	1	498386	-		X	LGTH = 60 MM 2.36" NSEP (ORD R83063) (SUB FOR R55401)
4	R73602	TUBE	1	498386	-		X	
5	R73603	TUBE	1	498386	-		X	
6	19H268	CAP SCREW	1	498386	-		X	3/8"X2-1/2"
7	24H1304	WASHER	1	498386	-		X	13/32"X23/32"X.120"
8	T20280	WASHER	1	498386	-		X	
9	R53524	CLAMP	1	498386	-		X	
10	R55127	HOSE	2	498386	-		X	
11	AR98852	OIL COOLER	AR	498386	-		X	ASSY, INCL KEYS 12,13-16, BEHR (ORD RE14448 W/ R78290, R70956, (2) R79691, (2) AT18904) (SUB FOR AR64415)
12	51M7012	RING	1	498386	-		X	(W/ AR98852) (SUB FOR CD15227)
13	15M2714	DRAIN PLUG	1	498386	-		X	(W/ AR98852)
14	R56947	DRAIN PLUG	1	498386	-		X	(W/ AR64415)
15	R70956	WASHER	1	498386	-		X	
16	AR98853	VALVE	1	498386	-		X	(W/ AR98852)
17	AT31093	VALVE	1	498386	-		X	(W/ AR64415)
18	T31306	THREADED NIPPLE	1	498386	-		X	
19	AR103053	KIT	AR		-	498385	X	KIT, INCL KEYS 1-5
..	R83063	HOSE	AR	498386	-		X	ID, LGTH = 16MMX2370MM 0.63"X93.30"

COPYRIGHT©1994 - 2008 DEERE & COMPANY Moline, Illinois All rights reserved

(1B18) ENGINE OIL COOLER/INCREASED CAPACITY
REFROIDISSEUR D'HUILE MOTEUR/CAPACITE AUGMENTEE
MOTOR-OELKUEHLER/GROESSERE KUEHLLEISTUNG
RADIATORE OLIO MOTORE(CAPACITA MAGGIORATA)
REFRIGERADOR DEL ACEITE DEL MOTOR/MAYOR CAPACIDAD
MOTOROLJEKYLARE(OKAD KAPACITET)

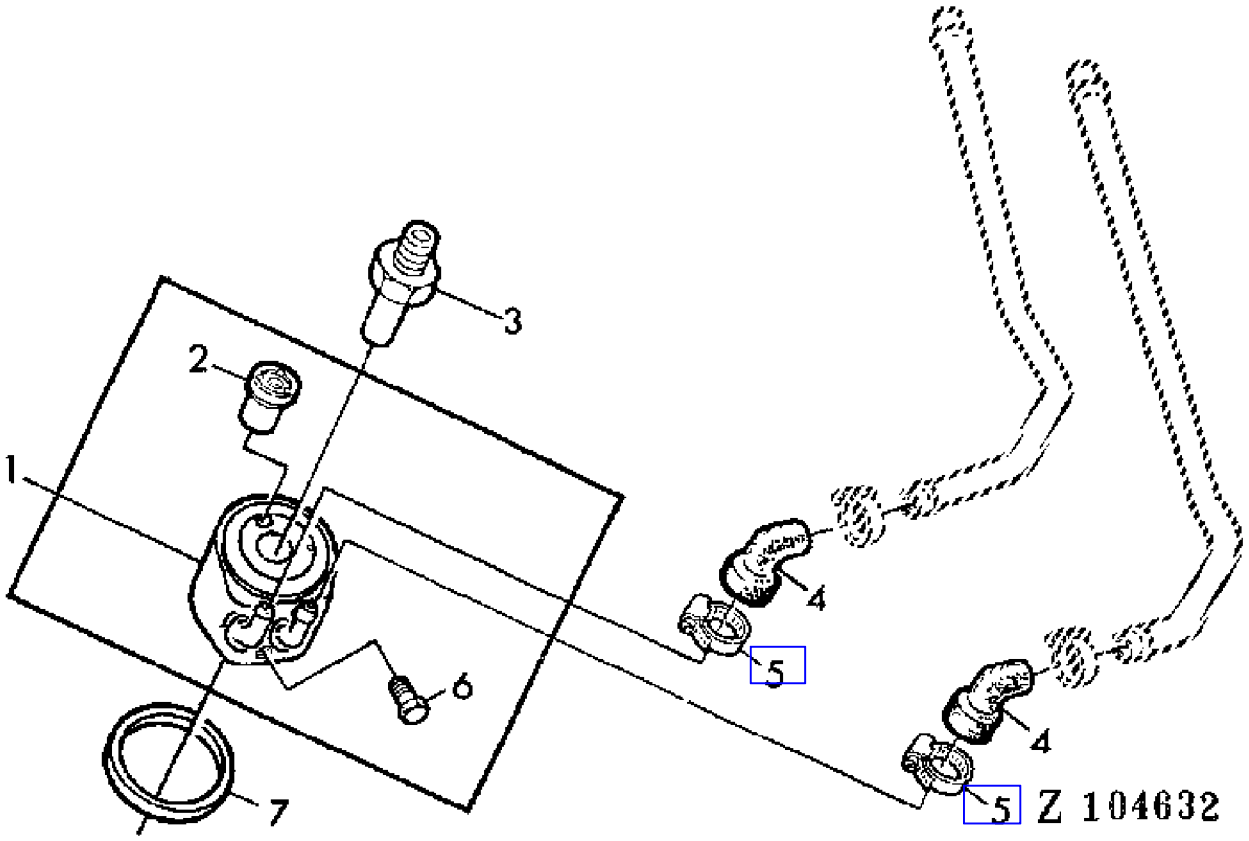

COPYRIGHT©1994 - 2008 DEERE & COMPANY Moline, Illinois All rights reserved

(1B18) ENGINE OIL COOLER/INCREASED CAPACITY
REFROIDISSEUR D'HUILE MOTEUR/CAPACITE AUGMENTEE
MOTOR-OELKUEHLER/GROESSERE KUEHLLEISTUNG
RADIATORE OLIO MOTORE(CAPACITA MAGGIORATA)
REFRIGERADOR DEL ACEITE DEL MOTOR/MAYOR CAPACIDAD
MOTOROLJEKYLARE(OKAD KAPACITET)

KEY	PART NO.	PART NAME	QTY	SERIAL NO.	955	REMARKS
1	RE14448	OIL COOLER	1		X	ASSY, INCL KEYS 2,6 (ORD W/ KEYS 3,4, 5,7)
2	AR98853	VALVE	1		X	
3	R78290	THREADED NIPPLE	1		X	
4	R79691	HOSE	2		X	
5	AT18904	CLAMP	2		X	
6	15M2714	DRAIN PLUG	1		X	
7	R70956	WASHER	1		X	

COPYRIGHT©1994 - 2008 DEERE & COMPANY Moline, Illinois All rights reserved

(1G04) ENGINE PULLEY
POULIE MOTEUR
MOTOR-RIEMENSCHEIBE
PULEGGIA MOTORE
POLEA DEL MOTOR
REMSKIVA AV MOTOR

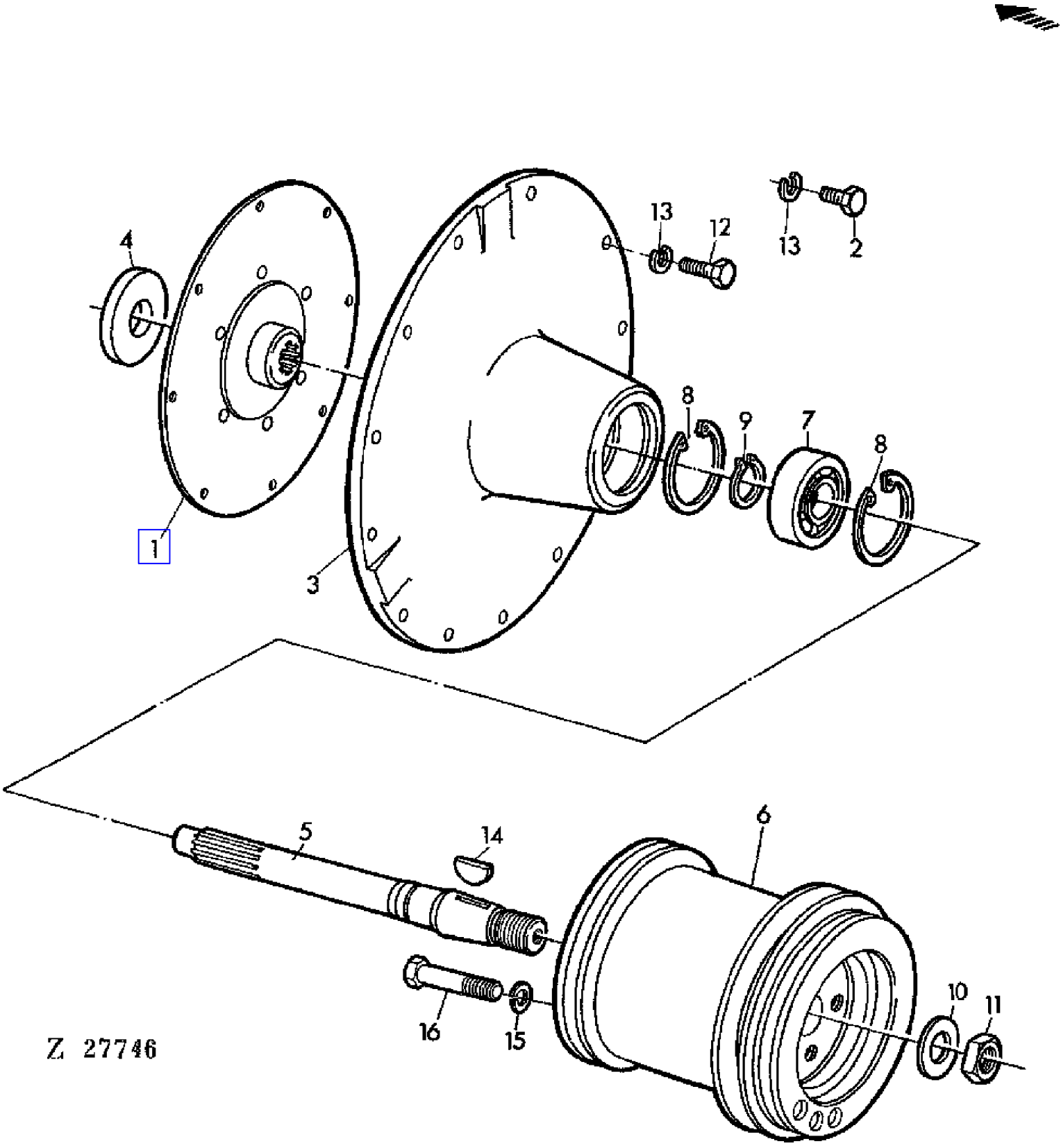

COPYRIGHT©1994 - 2008 DEERE & COMPANY Moline, Illinois All rights reserved

(PC4146) 955 Combine

(1G04) ENGINE PULLEY
POULIE MOTEUR
MOTOR-RIEMENSCHEIBE
PULEGGIA MOTORE
POLEA DEL MOTOR
REMSKIVA AV MOTOR

KEY	PART NO.	PART NAME	QTY	SERIAL NO.	955	REMARKS
1	AZ22756	DISK	1		X	
2	19H1936	CAP SCREW	8		X	3/8"X3/4"
3	Z10104	COVER	1		X	
4	Z21392	DISK	1		X	
5	Z35607	SHAFT	1		X	
6	AZ25702	PULLEY	1		X	(SUB FOR Z10726)
7	AP19769	BALL BEARING	1		X	
8	40M1873	SNAP RING	2		X	90X3MM
9	40M1835	SNAP RING	1		X	40X1,75MM
10	24M7092	WASHER	1		X	33X56X5MM
11	14M7176	LOCK NUT	1		X	M30X2
12	19H1731	CAP SCREW	12		X	3/8"X1"
13	12M7013	LOCK WASHER	AR		X	10MM
14	26M7000	SHAFT KEY	1		X	10X16MM
15	12M7014	LOCK WASHER	6		X	12MM
16	19M7493	CAP SCREW	6		X	M12X40

COPYRIGHT©1994 - 2008 DEERE & COMPANY Moline, Illinois All rights reserved

(PC4146) 955 Combine

(1C14) ENGINE SUPPORT
SUPPORT MOTEUR
MOTORTRAEGER
SUPPORTI MOTORE
SOPORTES DEL MOTOR
MOTORFASTEN

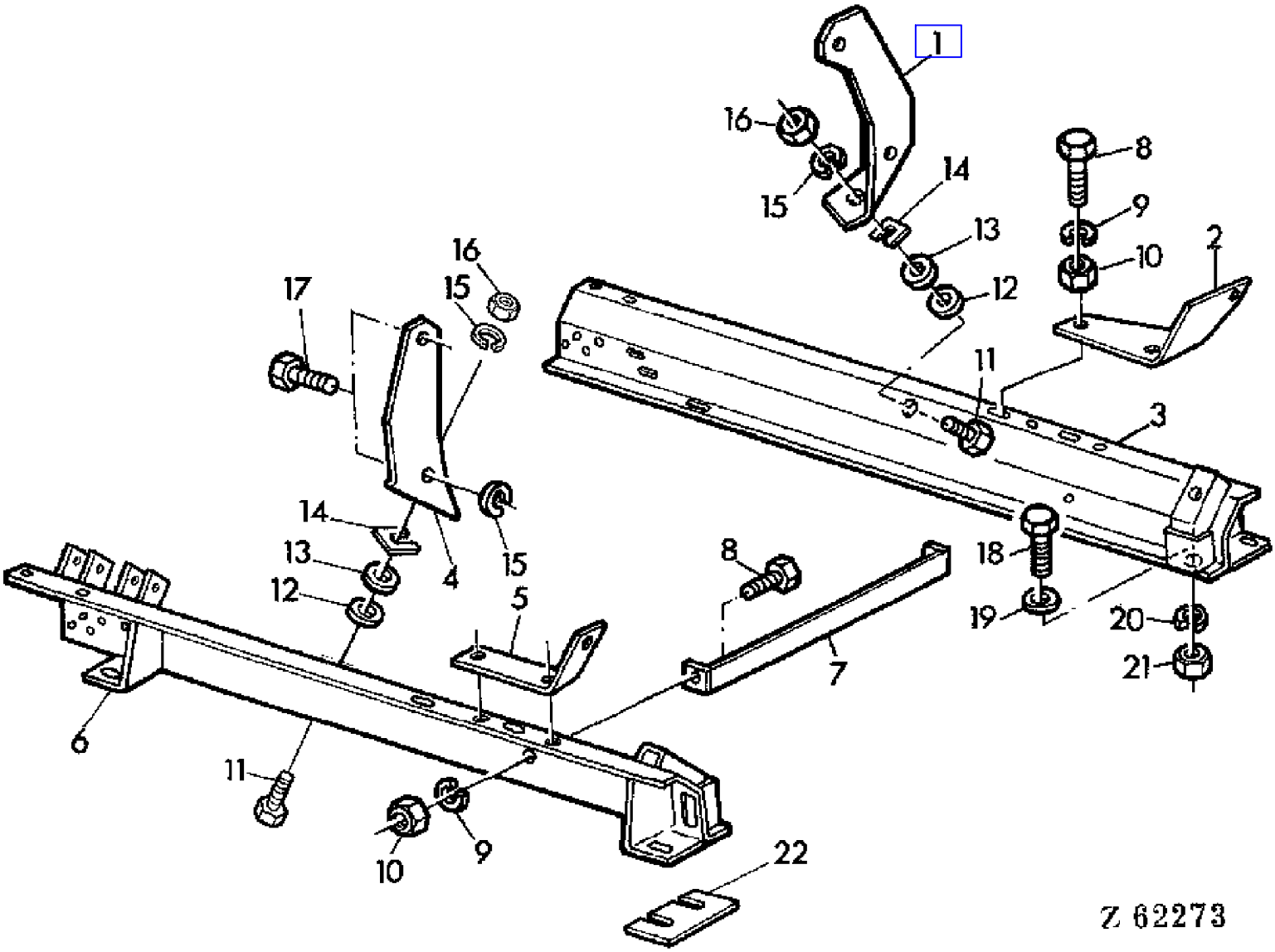

COPYRIGHT©1994 - 2008 DEERE & COMPANY Moline, Illinois All rights reserved

(1C14) ENGINE SUPPORT
SUPPORT MOTEUR
MOTORTRAEGER
SUPPORTI MOTORE
SOPORTES DEL MOTOR
MOTORFASTEN

KEY	PART NO.	PART NAME	QTY	SERIAL NO.	955	REMARKS
1	Z26649	SUPPORT	1		X	RH
2	Z27415	RETAINER	1		X	RH
3	AZ20463	SUPPORT	1		X	RH
4	Z26648	SUPPORT	1		X	LH
5	Z22308	HOLDER	1		X	LH
6	AZ23665	SUPPORT	1		X	LH
7	AZ20073	SPACER	1		X	
8	19M7139	CAP SCREW	AR		X	M8X20
9	12M7008	LOCK WASHER	AR		X	8MM
10	14M7029	NUT	AR		X	M8
11	19M7283	CAP SCREW	AR		X	M16X35
12	24M7049	WASHER	AR		X	18MM
13	L18889	WASHER	2		X	
14	Z31385	STRAP	AR		X	
15	12M7017	LOCK WASHER	AR		X	16MM
16	14M7142	NUT	AR		X	M16
17	19H1833	CAP SCREW	2		X	5/8"X1-1/4"
18	19M7167	CAP SCREW	AR		X	M10X25
19	24M7040	WASHER	AR		X	11MM
20	12M7013	LOCK WASHER	AR		X	10MM
21	14M7140	NUT	AR		X	M10
22	Z32810	STRAP	AR		X	TK = 1 MM
	Z32811	STRAP	AR		X	TK = 2 MM
	Z32809	STRAP	AR		X	TK = 4 MM

COPYRIGHT©1994 - 2008 DEERE & COMPANY Moline, Illinois All rights reserved

(1C04) ENGINE-MOUNTING PARTS
MOTEUR-ELEMENTS D'ADAPTATION
MOTOR-ANBAUTEILE
MOTORE-PARTI MONTAGGIO
MOTOR-PIEZAS DE MONTAJE
MOTOR-MONTERINGSDELAR

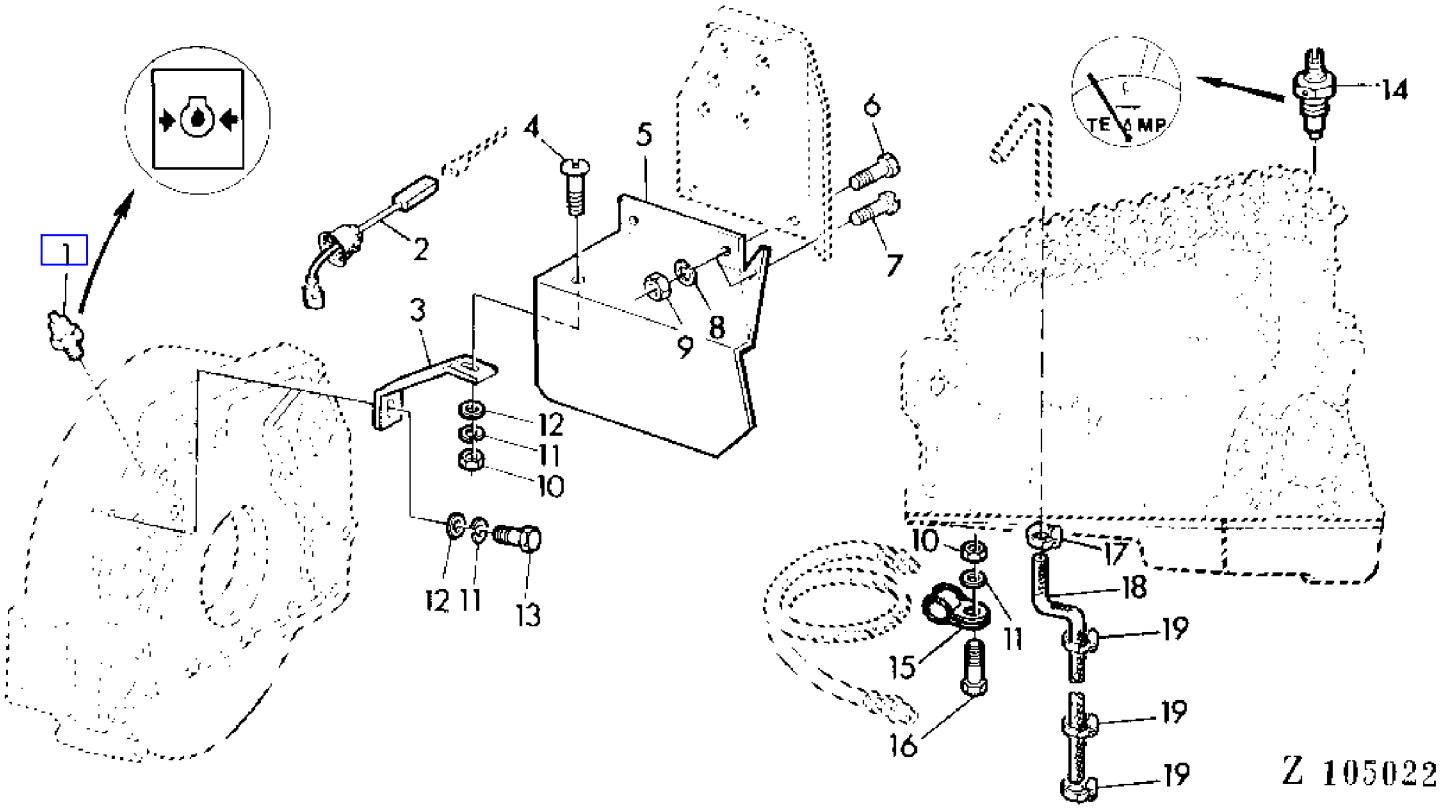

COPYRIGHT©1994 - 2008 DEERE & COMPANY Moline, Illinois All rights reserved

(1C04) ENGINE-MOUNTING PARTS
MOTEUR-ELEMENTS D'ADAPTATION
MOTOR-ANBAUTEILE
MOTORE-PARTI MONTAGGIO
MOTOR-PIEZAS DE MONTAJE
MOTOR-MONTERINGSDELAR

KEY	PART NO.	PART NAME	QTY	SERIAL NO.	955	REMARKS
1	AR27977	TOUCH SWITCH	1		X	
2	AT30691	WIRING LEAD	1		X	
3	Z39929	HOLDER	1		X	
4	21M7162	SCREW	1		X	M10X20
5	Z39931	GUARD	1		X	
6	19M6614	CAP SCREW	2		X	M6X12
7	21M7087	SCREW	1		X	M6X12
8	12M7012	LOCK WASHER	3		X	6MM
9	14M7027	NUT	3		X	M6
10	14M7140	NUT	1		X	M10
11	12M7013	LOCK WASHER	2		X	10MM
12	24M7040	WASHER	2		X	11MM
13	19H1936	CAP SCREW	1		X	3/8"X3/4"
14	AL24527	SENDER	1		X	
15	Z32042	CLAMP	2		X	
16	19M7168	CAP SCREW	2		X	M10X30
17	Z26822	CLAMP	1		X	
18	Z35141	HOSE	1		X	
19	Z21160	CLAMP	3		X	

COPYRIGHT©1994 - 2008 DEERE & COMPANY Moline, Illinois All rights reserved

(1C17) EXHAUST MANIFOLD
COLLECTEUR D'ECHAPPEMENT
AUSPUFFKRUEMMER
COLLETTORE SCARICO
COLECTOR DE ESCAPE
AVGASROR

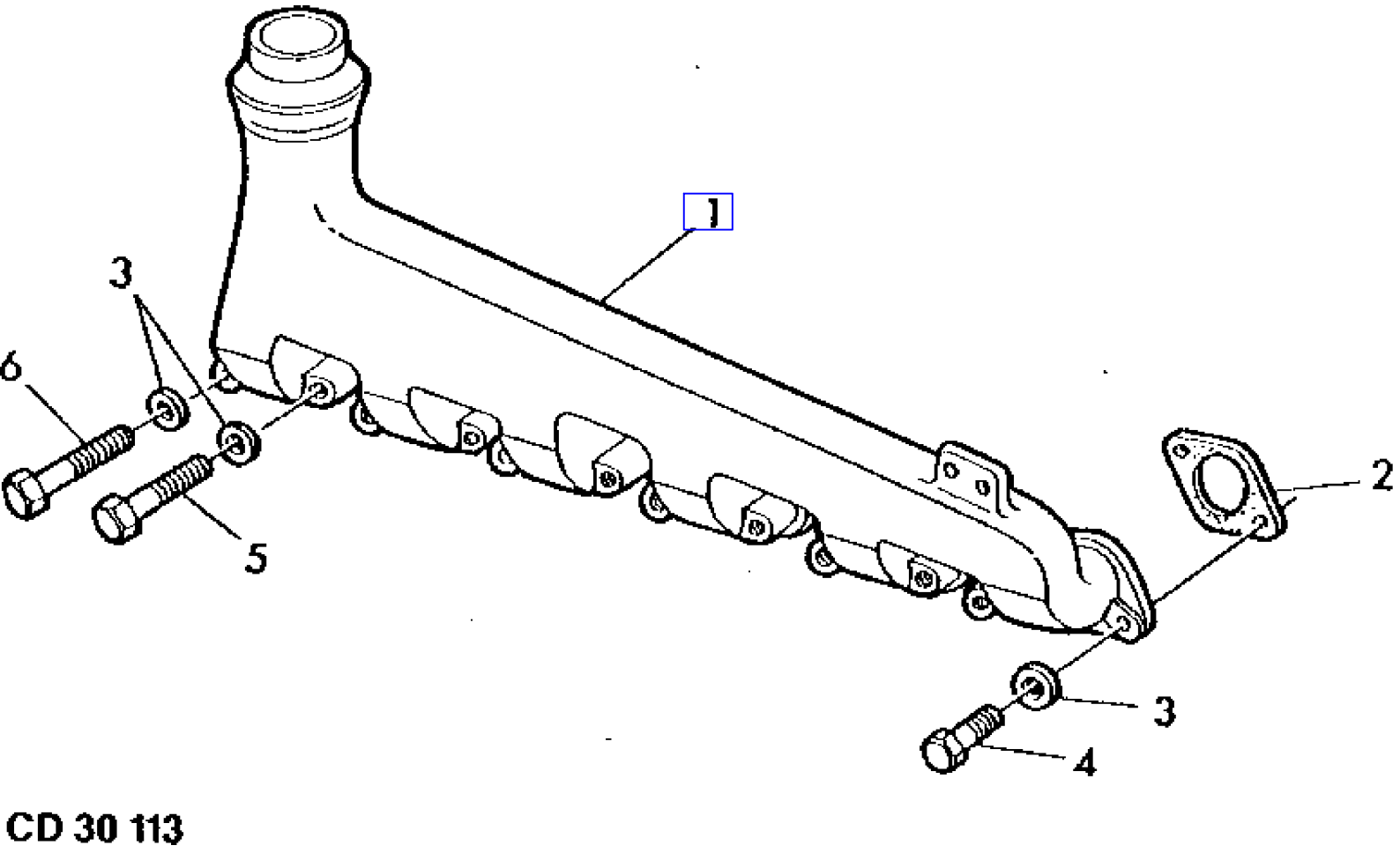

COPYRIGHT©1994 - 2008 DEERE & COMPANY Moline, Illinois All rights reserved

(PC4146) 955 Combine

(1C17) EXHAUST MANIFOLD
COLLECTEUR D'ECHAPPEMENT
AUSPUFFKRUEMMER
COLLETTORE SCARICO
COLECTOR DE ESCAPE
AVGASROR

KEY	PART NO.	PART NAME	QTY	ENGINE SERIAL NO.		955	REMARKS
1	R65850	EXHAUST MANIFOLD	1	377810	-	X	
2	T20006	GASKET	6	377810	-	X	
3	24H1303	WASHER	12	377810	-	X	13/32"X11/16"X.060"
4	19H988	CAP SCREW	1	377810	-	X	3/8"X1-1/4"
5	19H268	CAP SCREW	5	377810	-	X	3/8"X2-1/2"
6	19H1912	CAP SCREW	6	377810	-	X	3/8"X3-1/2"

COPYRIGHT©1994 - 2008 DEERE & COMPANY Moline, Illinois All rights reserved

(1D17) EXHAUST-SPECIAL EQUIPMENT
SILENCIEUX-OPTION
SCHALLDAEMPFER-SONDERAUSRUESTUNG
SILENZIATORE-ATTREZZO SPEZIALE
SILENCIADOR-EQUIPO ESPECIAL
LJUDDAMPARE-EXTRA UTRUSTNING

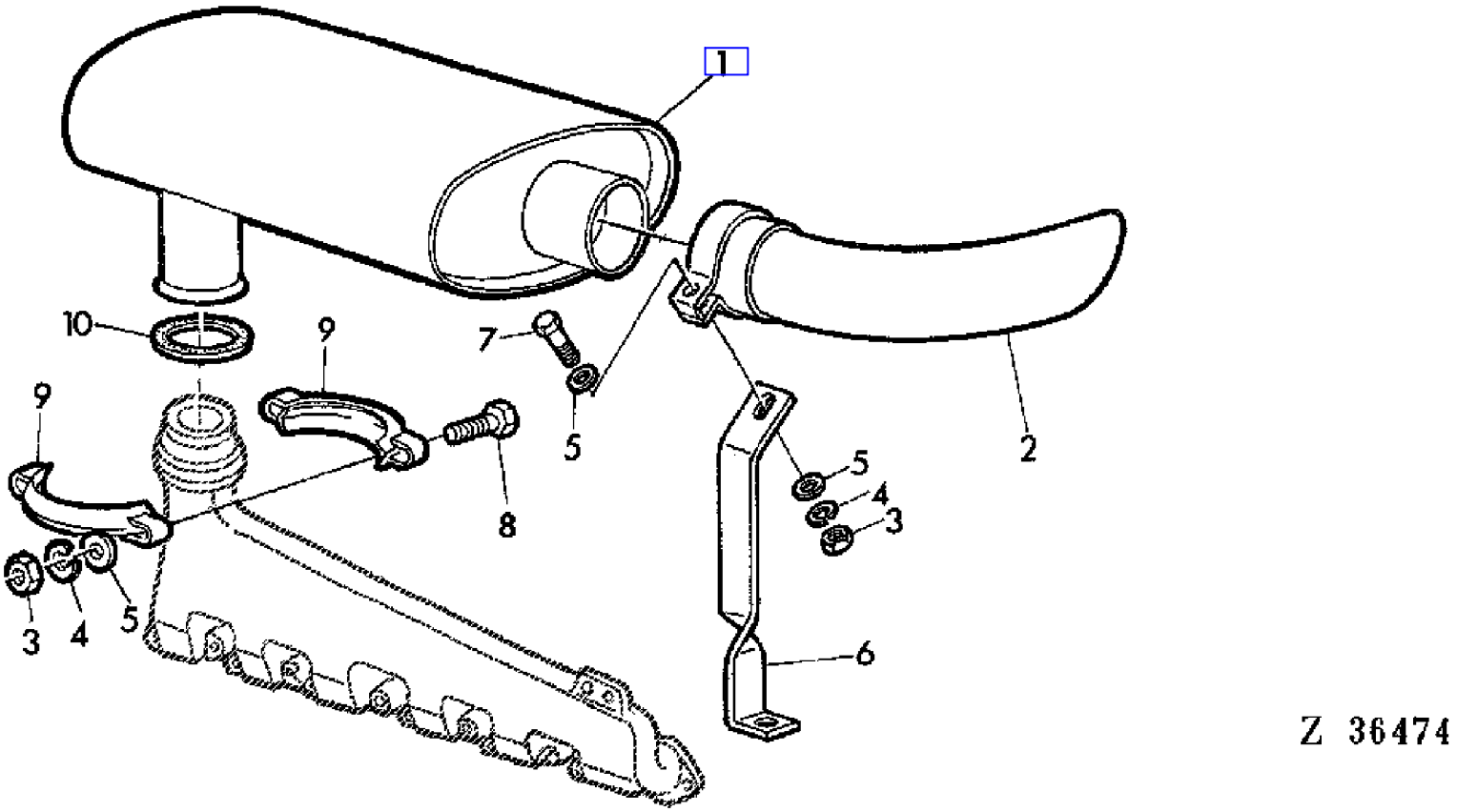

COPYRIGHT©1994 - 2008 DEERE & COMPANY Moline, Illinois All rights reserved

(1D17) EXHAUST-SPECIAL EQUIPMENT
SILENCIEUX-OPTION
SCHALLDAEMPFER-SONDERAUSRUESTUNG
SILENZIATORE-ATTREZZO SPEZIALE
SILENCIADOR-EQUIPO ESPECIAL
LJUDDAMPARE-EXTRA UTRUSTNING

KEY	PART NO.	PART NAME	QTY	SERIAL NO.	955	REMARKS
1	AZ26097	MUFFLER	1		X	
2	AZ31227	EXHAUST PIPE	1		X	
3	14M7029	NUT	AR		X	M8
4	12M7008	LOCK WASHER	AR		X	8MM
5	24M7036	WASHER	AR		X	9MM
6	Z41564	HOLDER	1		X	
7	19M7139	CAP SCREW	1		X	M8X25
8	19M7270	CAP SCREW	2		X	M8X65
9	AT29268	CLAMP	2		X	
10	R31142	SEALING WASHER	1		X	

COPYRIGHT©1994 - 2008 DEERE & COMPANY Moline, Illinois All rights reserved

(4D04) FAN
VENTILATEUR
GEBLAESE
VENTILATORE
VENTILADOR
FLAEKT

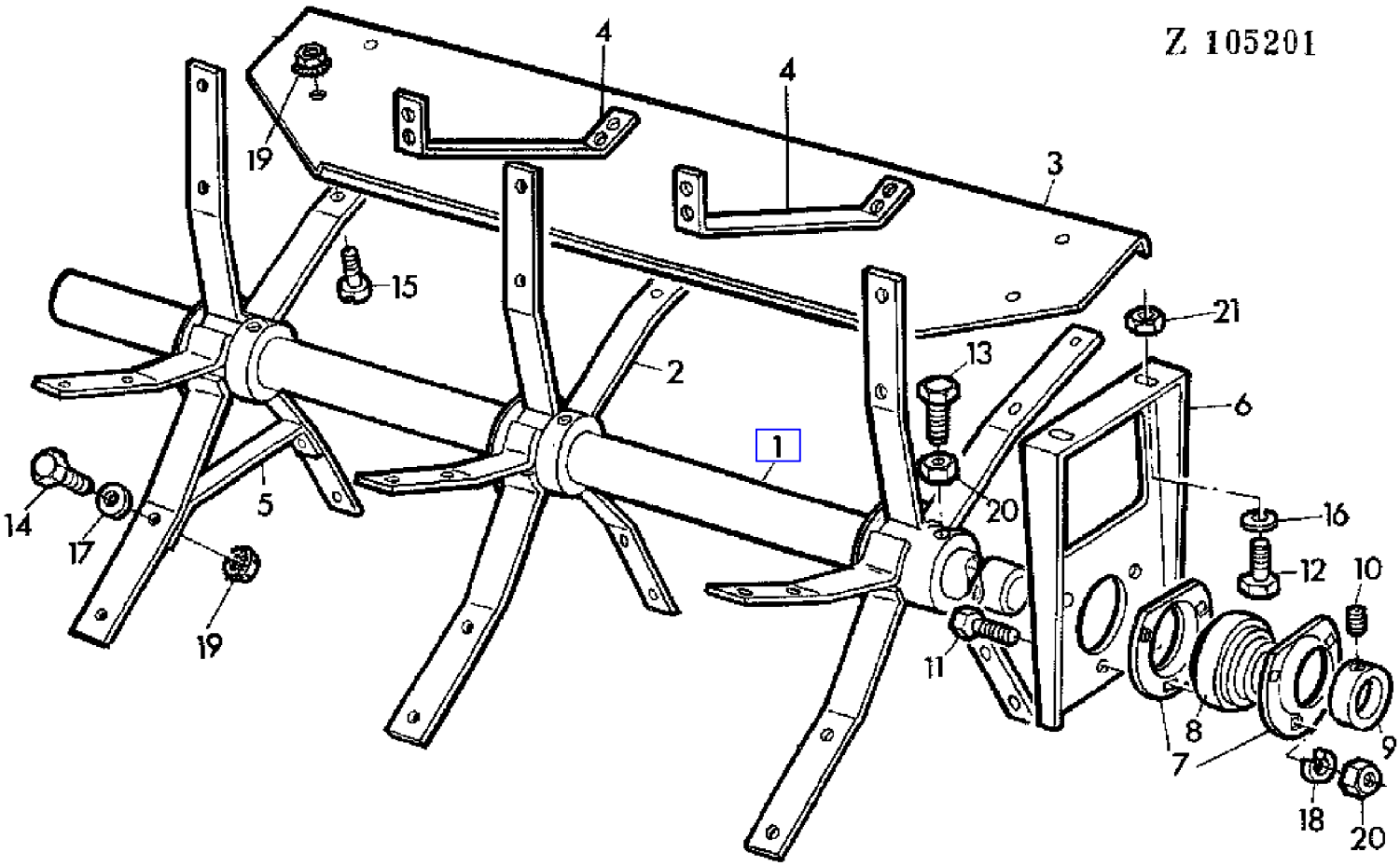

COPYRIGHT©1994 - 2008 DEERE & COMPANY Moline, Illinois All rights reserved

(PC4146) 955 Combine

(4D04) FAN
VENTILATEUR
GEBLAESE
VENTILATORE
VENTILADOR
FLAEKT

KEY	PART NO.	PART NAME	QTY	SERIAL NO.	955	REMARKS
1	Z20162	SHAFT	1		X	
2	AZ28398	HUB	3		X	(SUB FOR AZ10076)
3	Z20142	SHEET	5		X	
4	Z32818	BRACE	10		X	
5	Z26573	BRACE	10		X	
6	Z20164	SUPPORT	2		X	
7	Z38395	PRESSED FLANGED HOUSING	4		X	(SUB FOR P45502)
8	JD10384	BEARING	2		X	(SUB FOR JD39106)
9	AZ10045	ECCENTRIC LOCKING COLLAR	2		X	ASSY, INCL KEY 10
10	AZ19844	SET SCREW	2		X	KIT
11	19M7166	CAP SCREW	6		X	M10X20
12	19M7168	CAP SCREW	4		X	M10X30
13	22M7078	SET SCREW	3		X	M10X35
14	19M7286	CAP SCREW	AR		X	M6X25
15	19M7159	CAP SCREW	AR		X	M6X16
16	24M7040	WASHER	4		X	11MM
17	Z26250	WASHER	AR		X	
18	12M7013	LOCK WASHER	6		X	10MM
19	Z41039	LOCK NUT	AR		X	
20	14M7140	NUT	6		X	M10
21	14M7167	LOCK NUT	4		X	M10

COPYRIGHT©1994 - 2008 DEERE & COMPANY Moline, Illinois All rights reserved

(4D13) FAN ADJUSTING ROD
REGLAGE VENTILATEUR
GEBLAESE-VERSTELLSTANGE
ASTA REGOLAZIONE DEL VENTILATORE
VARILLAJE PARA EL AJUSTE DEL VENTILADOR
FLAKTENS JUSTERSTAG

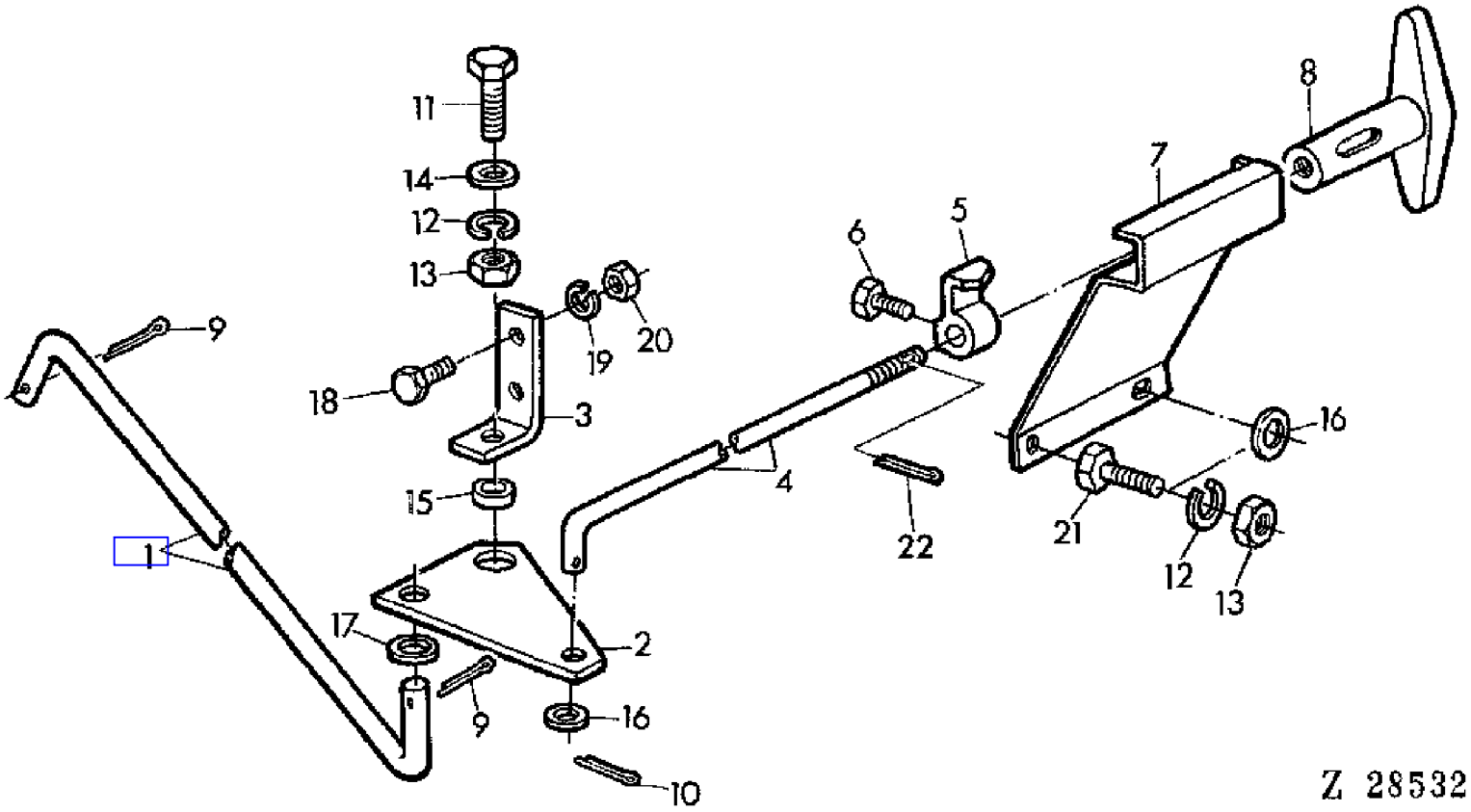

COPYRIGHT©1994 - 2008 DEERE & COMPANY Moline, Illinois All rights reserved

(4D13) FAN ADJUSTING ROD
REGLAGE VENTILATEUR
GEBLAESE-VERSTELLSTANGE
ASTA REGOLAZIONE DEL VENTILATORE
VARILLAJE PARA EL AJUSTE DEL VENTILADOR
FLAKTENS JUSTERSTAG

KEY	PART NO.	PART NAME	QTY	SERIAL NO.			955	REMARKS
1	Z20706	ROD	1		-	008277	X	
	Z36146	ROD	1	008278	-		X	
2	Z20700	LEVER	1		-	008277	X	
	Z36116	LEVER	1	008278	-		X	
3	Z20699	ANGLE	1				X	
4	Z39015	HOOK BOLT	1				X	(SUB FOR Z20709)
5	AZ13319	GAUGE	1				X	
6	19M7159	CAP SCREW	1				X	M6X15
7	AZ18853	BRACKET	1				X	
8	Z11242	GRIP	1				X	(SUB FOR Z10143)
9	11M7020	COTTER PIN	2				X	4X25MM
10	11M7013	COTTER PIN	1				X	3X20MM
11	19M7168	CAP SCREW	1				X	M10X30
12	12M7013	LOCK WASHER	3				X	10MM
13	14M7140	NUT	3				X	M10
14	24M7101	WASHER	1				X	11,5MM
15	Z20701	WASHER	1				X	
16	24M7040	WASHER	2				X	11MM
17	24M7038	WASHER	1		-	008277	X	14MM
	24M7040	WASHER	1	008278	-		X	11MM
18	19M7139	CAP SCREW	2				X	M8X20
19	12M7008	LOCK WASHER	2				X	8MM
20	14M7029	NUT	2				X	M8
21	19M7169	CAP SCREW	2				X	M10X35
22	11M7010	SPRING PIN	1				X	2X18MM

COPYRIGHT©1994 - 2008 DEERE & COMPANY Moline, Illinois All rights reserved

(2G02) FAN GUARD(MAIZE AND RICE)
GARANTS VENTILATEUR (MAISIRIZ)
GEBLAESE/SCHUTZE (MAIS UND REIS)
DIFESE DEL VENTILATORE(MAIS E RISO)
CHAPAS PROTECTORAS DEL VENTILADOR (MAIZ Y ARROZ)
FLAEKTSKYDD(MAJS OCH RIS)

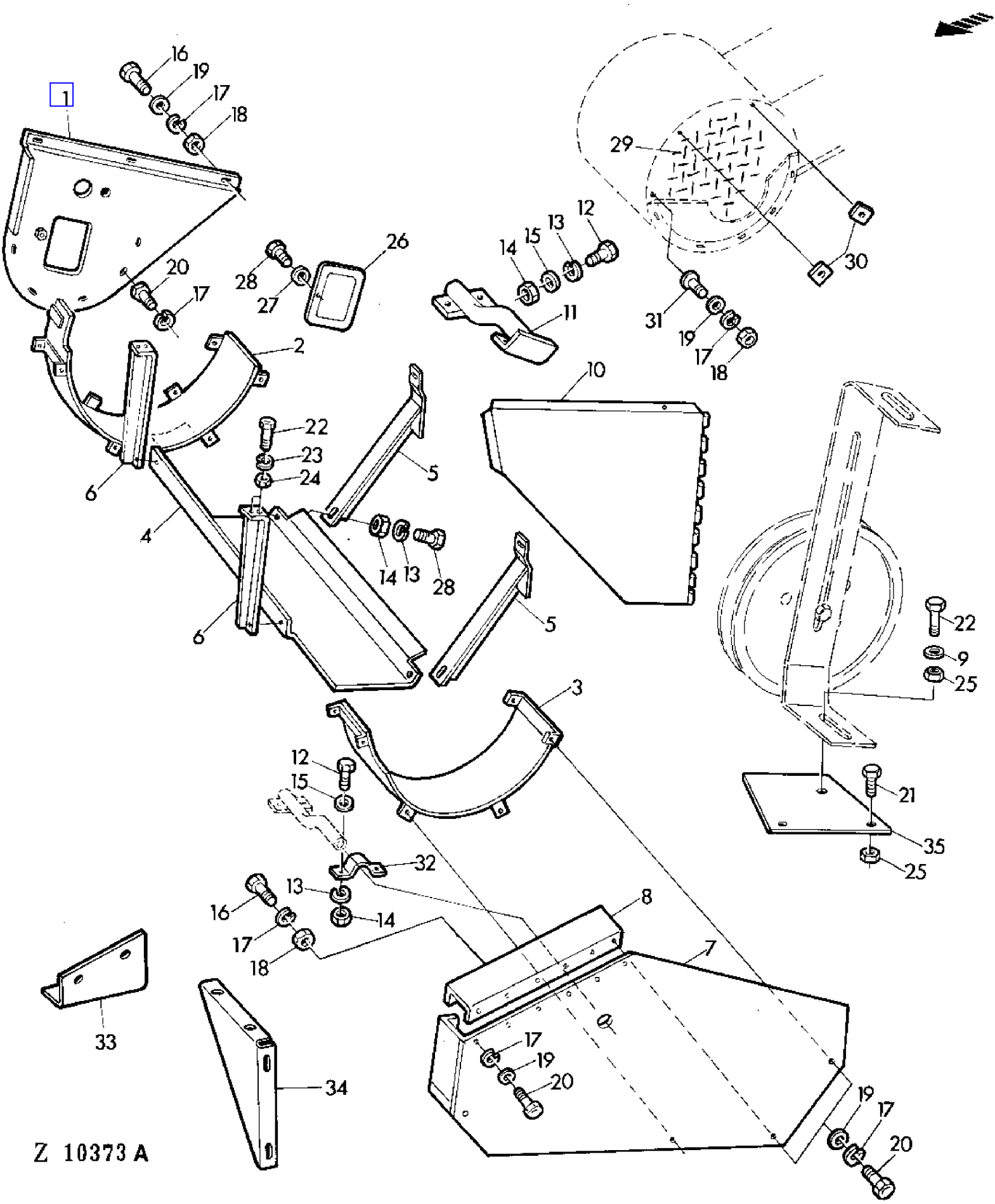

COPYRIGHT©1994 - 2008 DEERE & COMPANY Moline, Illinois All rights reserved

(2G02) FAN GUARD(MAIZE AND RICE)
GARANTS VENTILATEUR (MAISIRIZ)
GEBLAESE/SCHUTZE (MAIS UND REIS)
DIFESE DEL VENTILATORE(MAIS E RISO)
CHAPAS PROTECTORAS DEL VENTILADOR (MAIZ Y ARROZ)
FLAEKTSKYDD(MAJS OCH RIS)

KEY	PART NO.	PART NAME	QTY	SERIAL NO.	955	REMARKS
1	AZ20778	GUARD	1		X	RH
2	AZ20562	GUARD	1		X	RH
3	AZ20561	GUARD	1		X	LH
4	Z32826	GUARD	1		X	
5	AZ24907	HOLDER	2		X	REAR (SUB FOR AZ14914)
6	Z32825	RETAINER	2		X	
7	AZ17208	GUARD	1		X	LH
8	AZ33919	GUARD	1		X	(SUB FOR Z28562)
9	24M7040	WASHER	1		X	11MM
10	AZ21781	GUARD	1		X	
	AZ17207	GUARD	1		X	(A) LH
11	AZ17206	BRACE	1		X	(A) LH
12	19M7163	CAP SCREW	4		X	M8X25
13	12M7008	LOCK WASHER	8		X	8MM
14	14M7029	NUT	8		X	M8
15	24M7036	WASHER	4		X	9MM
16	19M7159	CAP SCREW	5		X	M6X15
17	12M7012	LOCK WASHER	36		X	6MM
18	14M7027	NUT	36		X	M6
19	Z26250	WASHER	34		X	6,5MM
20	19M6614	CAP SCREW	19		X	M6X12
21	19M7167	CAP SCREW	2		X	M10X25
22	19M7169	CAP SCREW	6		X	M10X35
23	12M7013	LOCK WASHER	10		X	10MM
24	14M7140	NUT	10		X	M10
25	14M7167	LOCK NUT	2		X	M10
26	Z26683	COVER	1		X	
27	12M7022	LOCK WASHER	1		X	8,2MM
28	19M7162	CAP SCREW	1		X	M8X15
29	AZ13345	GRILLE	2		X	
30	Z23754	STRAP	4		X	
31	21M7085	SCREW	12		X	M6X20
32	Z26028	CLAMP	1		X	
33	Z32823	GUARD	1		X	(A)
34	Z37912	SUPPORT	1		X	(A) (SUB FOR Z32824)
35	Z26192	PLATE	1		X	(A)

(A) RICE
RIZ
REIS
RISO
ARROZ
RIS

COPYRIGHT©1994 - 2008 DEERE & COMPANY Moline, Illinois All rights reserved

(4D02) FAN HOUSING
CARTER VENTILATEUR
GEBLAESEGEHAEUSE
SCATOLA DEL VENTILATORE
CARTER DEL VENTILADOR
FLAKTHUS

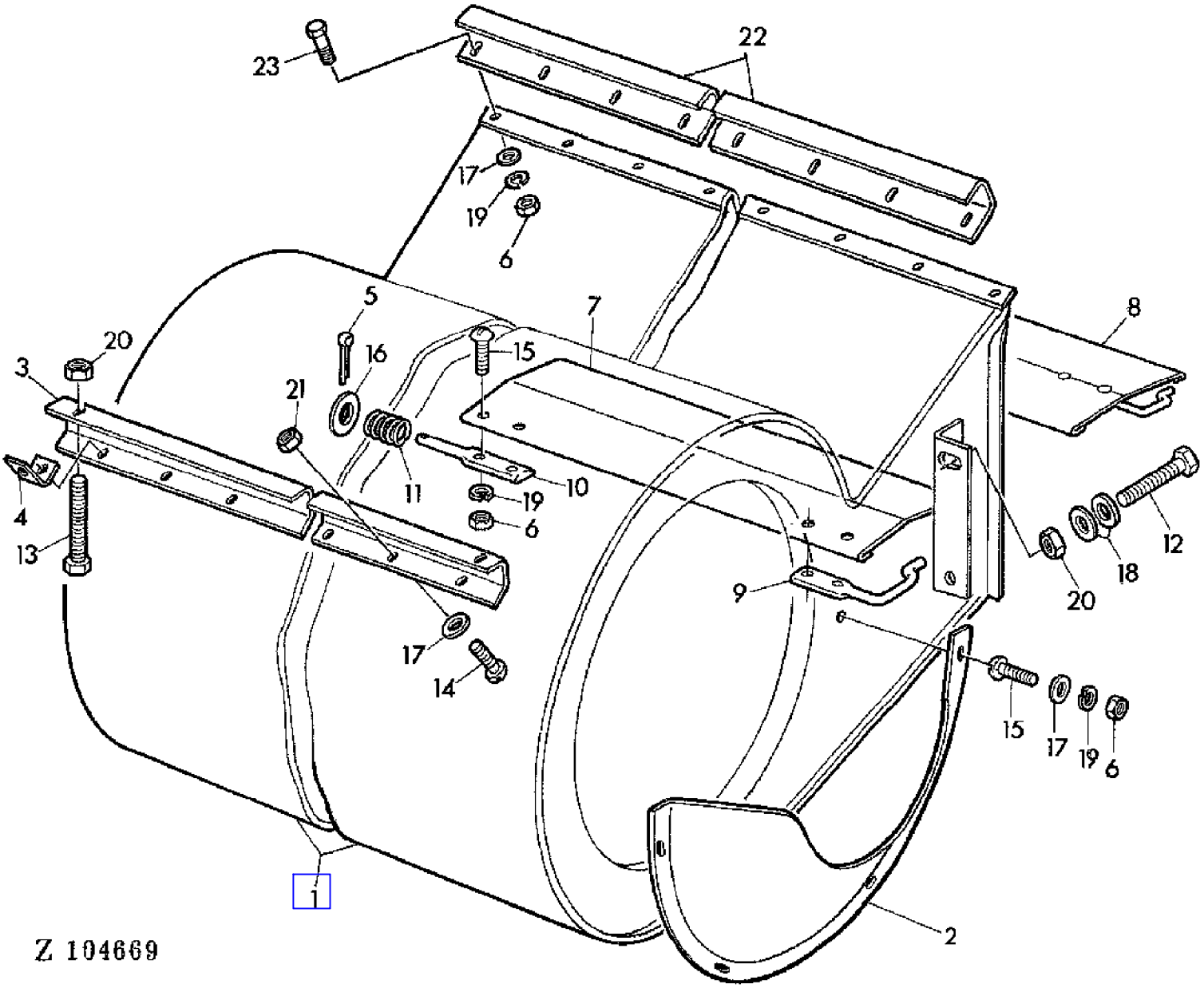

COPYRIGHT©1994 - 2008 DEERE & COMPANY Moline, Illinois All rights reserved

(PC4146) 955 Combine

(4D02) FAN HOUSING
CARTER VENTILATEUR
GEBLAESEGEHAEUSE
SCATOLA DEL VENTILATORE
CARTER DEL VENTILADOR
FLAKTHUS

KEY	PART NO.	PART NAME	QTY	SERIAL NO.	955	REMARKS
1	AZ33572	HOUSING	1		X	(SUB FOR AZ23397)
2	Z20559	GUARD	2		X	
3	Z26706	CHANNEL	1		X	
4	Z22967	ANGLE	1		X	
5	11M7011	COTTER PIN	AR		X	3X15MM
6	14M7027	NUT	AR		X	M6
7	Z20151	DEFLECTOR	1		X	LOW
8	Z20152	DEFLECTOR	1		X	UP
9	Z20154	LEVER	2		X	
10	Z27520	GUDGEON	2		X	
11	L20507	SPRING	2		X	
12	19M7167	CAP SCREW	1		X	M10X25
13	19M7168	CAP SCREW	1		X	M10X30
14	21M7087	SCREW	AR		X	M6X12
15	21M7031	SCREW	AR		X	M6X15
16	24M7028	WASHER	2		X	10,5MM
17	24M7088	WASHER	AR		X	6,6MM
18	24M7040	WASHER	AR		X	11,5MM
19	12M7012	LOCK WASHER	AR		X	6MM
20	14M7167	LOCK NUT	AR		X	M10
21	14M7165	LOCK NUT	AR		X	M6
22	Z42640	REINFORCEMENT	1	035028 -	X	
23	19M7159	CAP SCREW	AR	035028 -	X	M6X16

COPYRIGHT©1994 - 2008 DEERE & COMPANY Moline, Illinois All rights reserved

(4D12) FAN TENSION PULLEY
TENDEUR VENTILATEUR
GEBLAESESPANNROLLE
PULEGGIA TENDITRICE DEL VENTILATORE
POLEA TENSORA DEL VENTILADOR
FLAKTENS SPANNRULLE

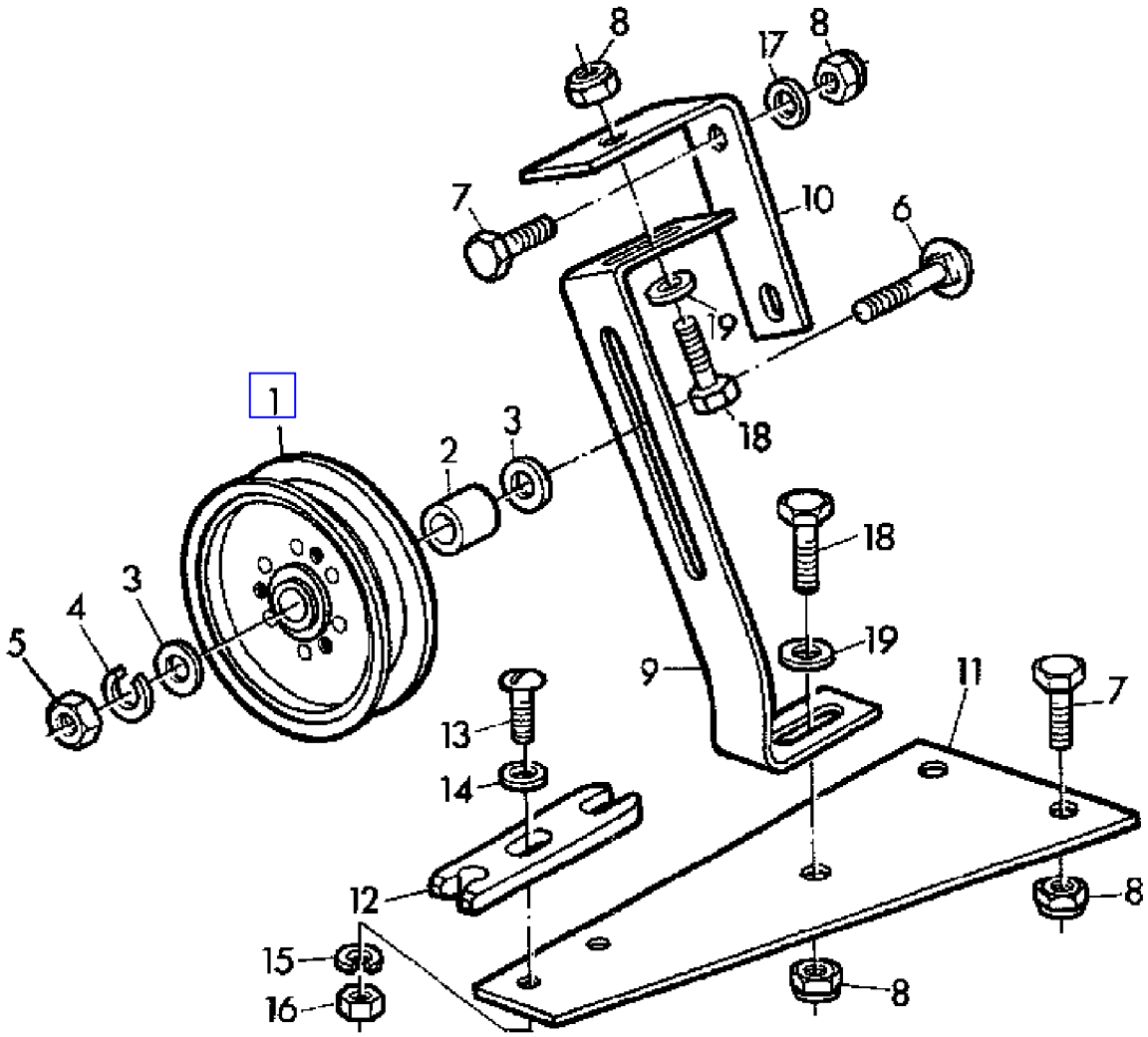

Z 27842

COPYRIGHT©1994 - 2008 DEERE & COMPANY Moline, Illinois All rights reserved

(4D12) FAN TENSION PULLEY
TENDEUR VENTILATEUR
GEBLAESESPANNROLLE
PULEGGIA TENDITRICE DEL VENTILATORE
POLEA TENSORA DEL VENTILADOR
FLAKTENS SPANNRULLE

KEY	PART NO.	PART NAME	QTY	SERIAL NO.	955	REMARKS
1	AP24917	IDLER	1		X	
2	Z20360	SPACER	1		X	
3	24M7049	WASHER	2		X	18MM
4	12M7017	LOCK WASHER	1		X	16MM
5	14M7142	NUT	1		X	M16
6	03M7080	BOLT	1		X	M16X70
7	19M7167	CAP SCREW	3		X	M10X25
8	14M7167	LOCK NUT	6		X	M10
9	Z26188	HOLDER	1		X	
10	Z26185	HOLDER	1		X	
11	Z26183	PLATE	1		X	
12	Z24277	HOLDER	1		X	
13	21M7085	SCREW	2		X	M6X20
14	Z26250	WASHER	2		X	6,5MM
15	12M7012	LOCK WASHER	2		X	6MM
16	14M7027	NUT	AR		X	M6
17	24M7040	WASHER	1		X	11MM
18	19M7168	CAP SCREW	2		X	M10X30
19	24M7178	WASHER	2		X	10,5MM

COPYRIGHT©1994 - 2008 DEERE & COMPANY Moline, Illinois All rights reserved

(4D06) FAN VARIATOR
VARIATEUR VENTILATEUR
GEBLAESE-VARIATOR
VARIATORE DEL VENTILATORE
VARIADOR DEL VENTILADOR
FLAKTVARIATOR

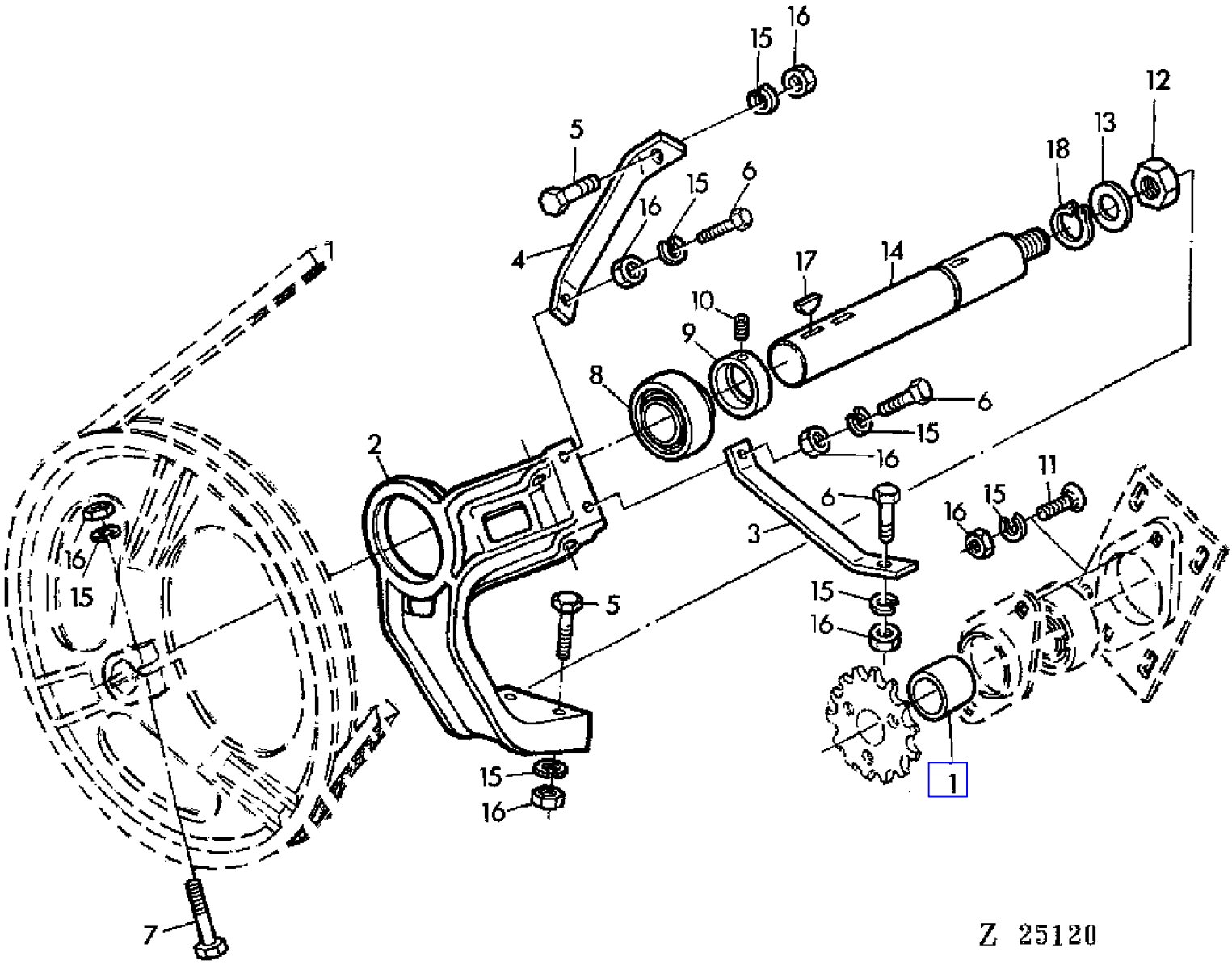

COPYRIGHT©1994 - 2008 DEERE & COMPANY Moline, Illinois All rights reserved

(PC4146) 955 Combine

(4D06) FAN VARIATOR
VARIATEUR VENTILATEUR
GEBLAESE-VARIATOR
VARIATORE DEL VENTILATORE
VARIADOR DEL VENTILADOR
FLAKTVARIATOR

KEY	PART NO.	PART NAME	QTY	SERIAL NO.	955	REMARKS
1	Z30029	SPACER	1	- 011231	X	
2	Z10073	SUPPORT	1	- 011231	X	
3	Z31993	BRACE	1	- 011231	X	LOW
4	Z31994	BRACE	1	- 011231	X	UP
5	19M7382	CAP SCREW	3		X	M10X40
6	19M7168	CAP SCREW	3		X	M10X30
7	19M7327	CAP SCREW	1	- 011231	X	M10X65
8	JD39103	BALL BEARING	1		X	
9	AZ10045	ECCENTRIC LOCKING COLLAR	1		X	ASSY, INCL KEY 10
10	AZ19844	SET SCREW	1		X	KIT
11	03M7088	BOLT	2		X	M10X20
12	14M7170	LOCK NUT	1		X	M16
13	L18889	WASHER	1		X	17X40X4MM
14	Z32102	SHAFT	1	- 011231	X	
15	12M7013	LOCK WASHER	10		X	10MM
16	14M7140	NUT	10		X	M10
17	26M6731	SHAFT KEY	3		X	6X10MM
18	40M1831	SNAP RING	1		X	30X1,5MM

COPYRIGHT©1994 - 2008 DEERE & COMPANY Moline, Illinois All rights reserved

(4D08) FAN VARIATOR
VARIATEUR VENTILATEUR
GEBLAESE-VARIATOR
VARIATORE DEL VENTILATORE
VARIADOR DEL VENTILADOR
FLAEKTVARIATOR

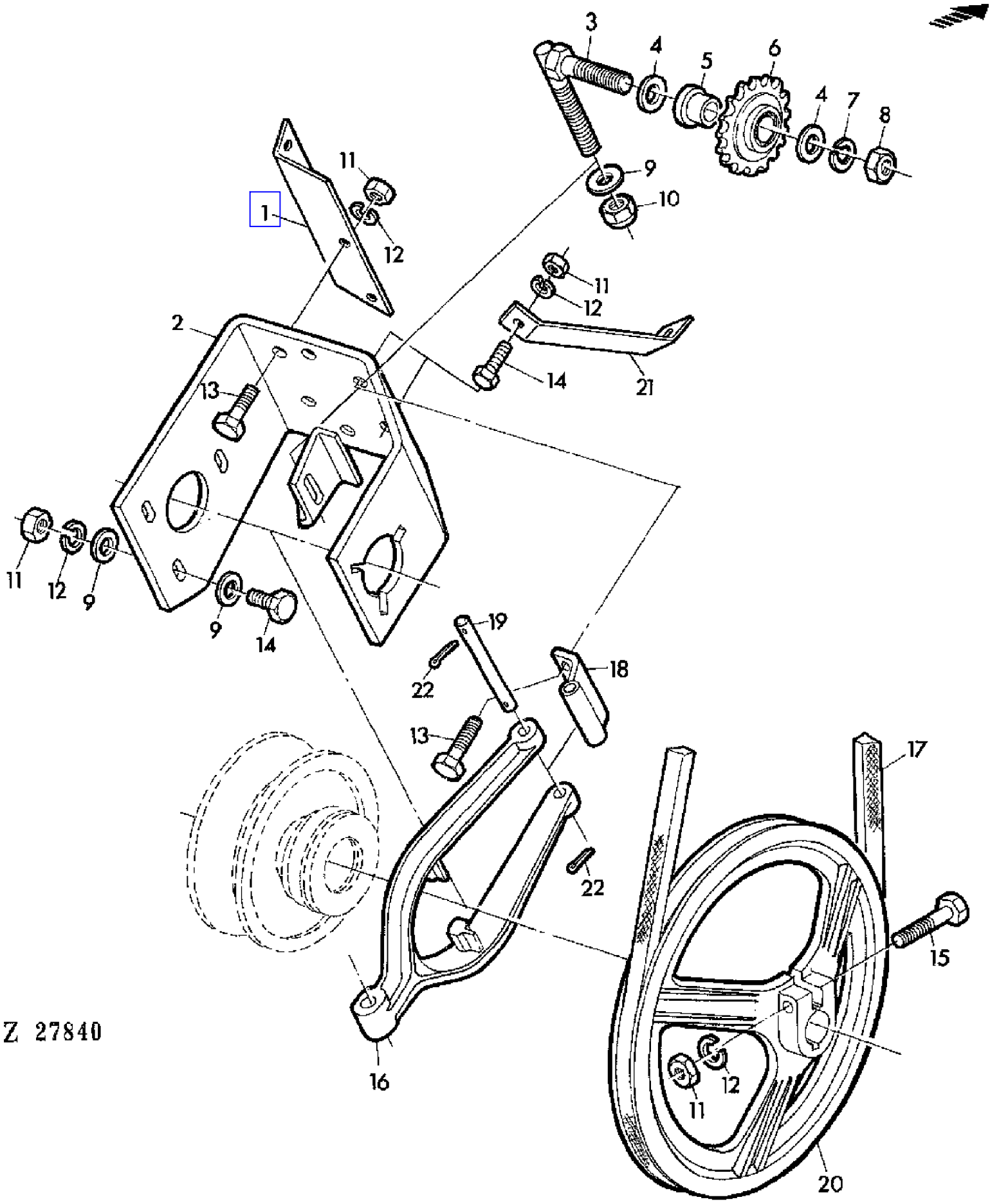

COPYRIGHT©1994 - 2008 DEERE & COMPANY Moline, Illinois All rights reserved

(4D08) FAN VARIATOR
VARIATEUR VENTILATEUR
GEBLAESE-VARIATOR
VARIATORE DEL VENTILATORE
VARIADOR DEL VENTILADOR
FLAEKTVARIATOR

KEY	PART NO.	PART NAME	QTY	SERIAL NO.			955	REMARKS
1	Z36673	RETAINER	1				X	
2	AZ23428	SUPPORT	1		-	017017	X	(ORD AZ18115, AZ27085, Z20579)
	AZ27085	QUILL	1	017018	-		X	
3	AZ23866	TIGHTENER	1		-	017017	X	
	AZ18115	TIGHTENER	1	017018	-		X	
4	24M7038	WASHER	2				X	14MM
5	Z20579	BUSHING	1	017018	-		X	
6	AZ10272	CHAIN SPROCKET	1				X	Z = 15
7	12M7014	LOCK WASHER	1				X	12MM
8	14M7154	NUT	1				X	M12
9	24M7040	WASHER	6				X	11MM
10	14M7167	LOCK NUT	1				X	M10
11	14M7140	NUT	AR				X	M10
12	12M7013	LOCK WASHER	AR				X	10MM
13	19M7167	CAP SCREW	AR				X	M10X25
14	19M7168	CAP SCREW	AR				X	M10X30
15	19M7156	CAP SCREW	1				X	M10X60
16	Z10857	FORK	1		-	008277	X	
	Z11068	FORK	1	008278	-		X	(SUB FOR Z10857)
17	Z34405	BELT	1				X	
18	AZ23427	RETAINER	1				X	
19	Z20575	PIN	1				X	
20	Z11084	PULLEY	1				X	(SUB FOR Z10812, Z10950)
21	Z37729	BRACE	1				X	
22	11M7013	COTTER PIN	2				X	3,2X20MM

COPYRIGHT©1994 - 2008 DEERE & COMPANY Moline, Illinois All rights reserved

(3D18) FAN-AIR CONDITIONED CAB
VENTILATEUR-CABINE CLIMATISEE
VENTILATOR-KABINE MIT KLIMAANLAGE
VENTILATORE-CABINA CONDIZIONATA
VENTILADOR-CABINA CON AIRE ACONDICIONADO
FLAKT-HYTT MED LUFTKONDITIONERING

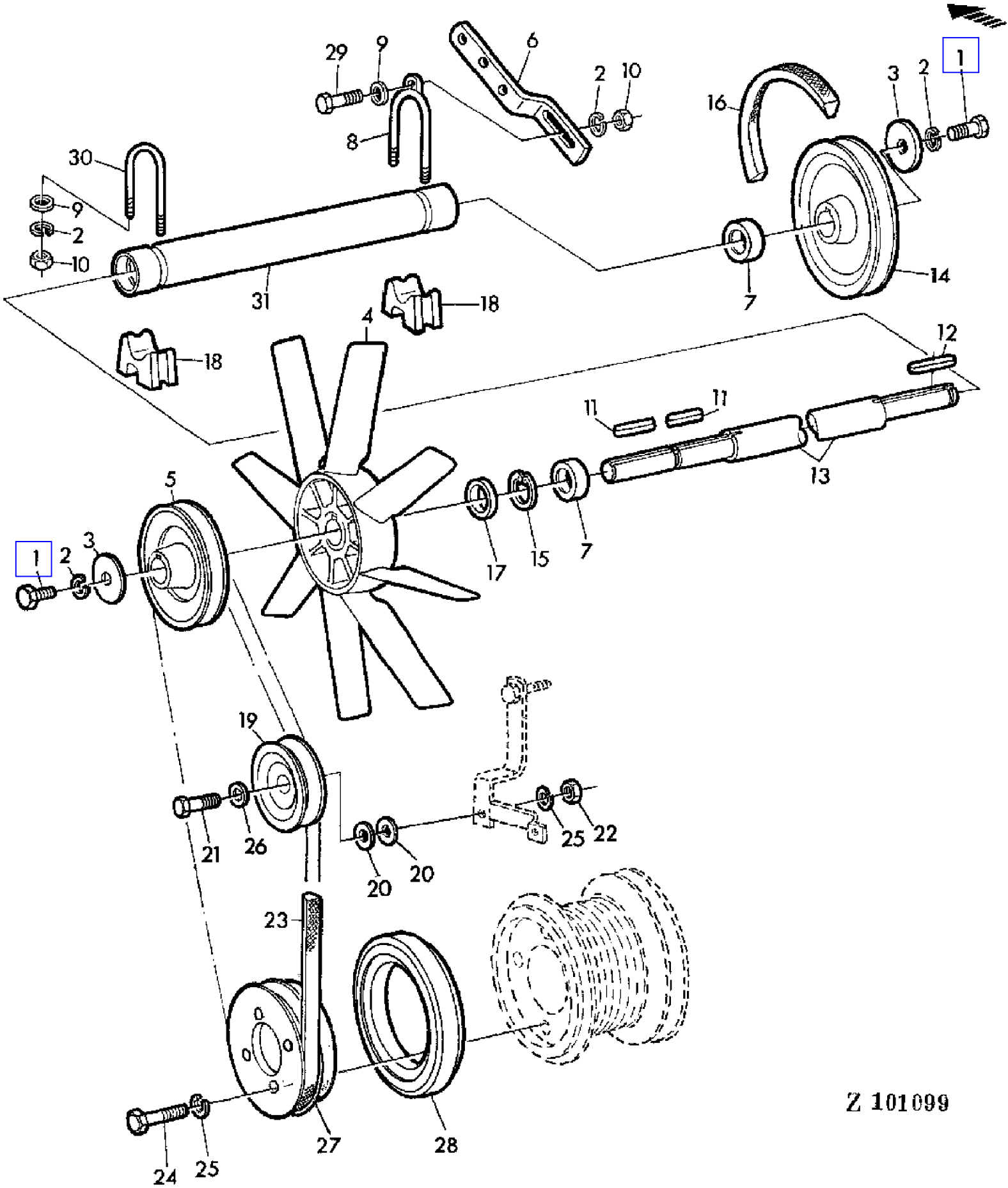

COPYRIGHT©1994 - 2008 DEERE & COMPANY Moline, Illinois All rights reserved

(3D18) FAN-AIR CONDITIONED CAB
VENTILATEUR-CABINE CLIMATISEE
VENTILATOR-KABINE MIT KLIMAANLAGE
VENTILATORE-CABINA CONDIZIONATA
VENTILADOR-CABINA CON AIRE ACONDICIONADO
FLAKT-HYTT MED LUFTKONDITIONERING

KEY	PART NO.	PART NAME	QTY	SERIAL NO.	955	REMARKS
1	19M7139	CAP SCREW	1		X	M8X20
2	12M7072	LOCK WASHER	AR		X	8MM
3	CA20725	WASHER	1		X	
4	DA20511	FAN	1		X	
5	CA22531	PULLEY	1		X	
6	CA22532	LEVER	1		X	
7	JD30071	BALL BEARING	2		X	(SUB FOR JD30284)
8	DA22524	BAIL	1		X	
9	24M7036	WASHER	AR		X	9MM
10	14M7029	NUT	AR		X	M8
11	49M4821	SHAFT KEY	2		X	6X6X32MM
12	49M4039	SHAFT KEY	2		X	6X6X32MM
13	CA22527	JACKSHAFT	1		X	
14	CA20512	PULLEY	1		X	
15	40M1863	SNAP RING	1		X	47X1,75MM
16	CA20514	BELT	1		X	
17	CA22528	WASHER	1		X	
18	CA22529	SUPPORT	2		X	
19	AZ24263	IDLER	1		X	
20	24M7140	WASHER	AR		X	13X19X1MM
21	19M7330	CAP SCREW	1		X	M12X55
22	14M7031	NUT	1		X	M12
23	CA22534	BELT	1		X	
24	19M7307	CAP SCREW	4		X	M12X150
25	12M7014	LOCK WASHER	AR		X	12MM
26	24M7084	WASHER	AR		X	14MM
27	CA22538	PULLEY	1		X	
28	CA22537	SPACER	1		X	AR
29	19M7163	CAP SCREW	1		X	M8X25
30	CA22525	BAIL	1		X	
31	CA22530	TUBE	1		X	

COPYRIGHT©1994 - 2008 DEERE & COMPANY Moline, Illinois All rights reserved

(3F24) FEEDER CONVEYOR CHAIN
CHAINES ET CORNIERES DU CONVOYEUR
SCHRAEGFOERDERKETTE
CATENA DEL CONVOGLIATORE TRAVERSINE
CADENA Y LISTON DE ARRASTRE DEL ELEVADOR DE MIES
INMATNINGSELEVATORKEDJA

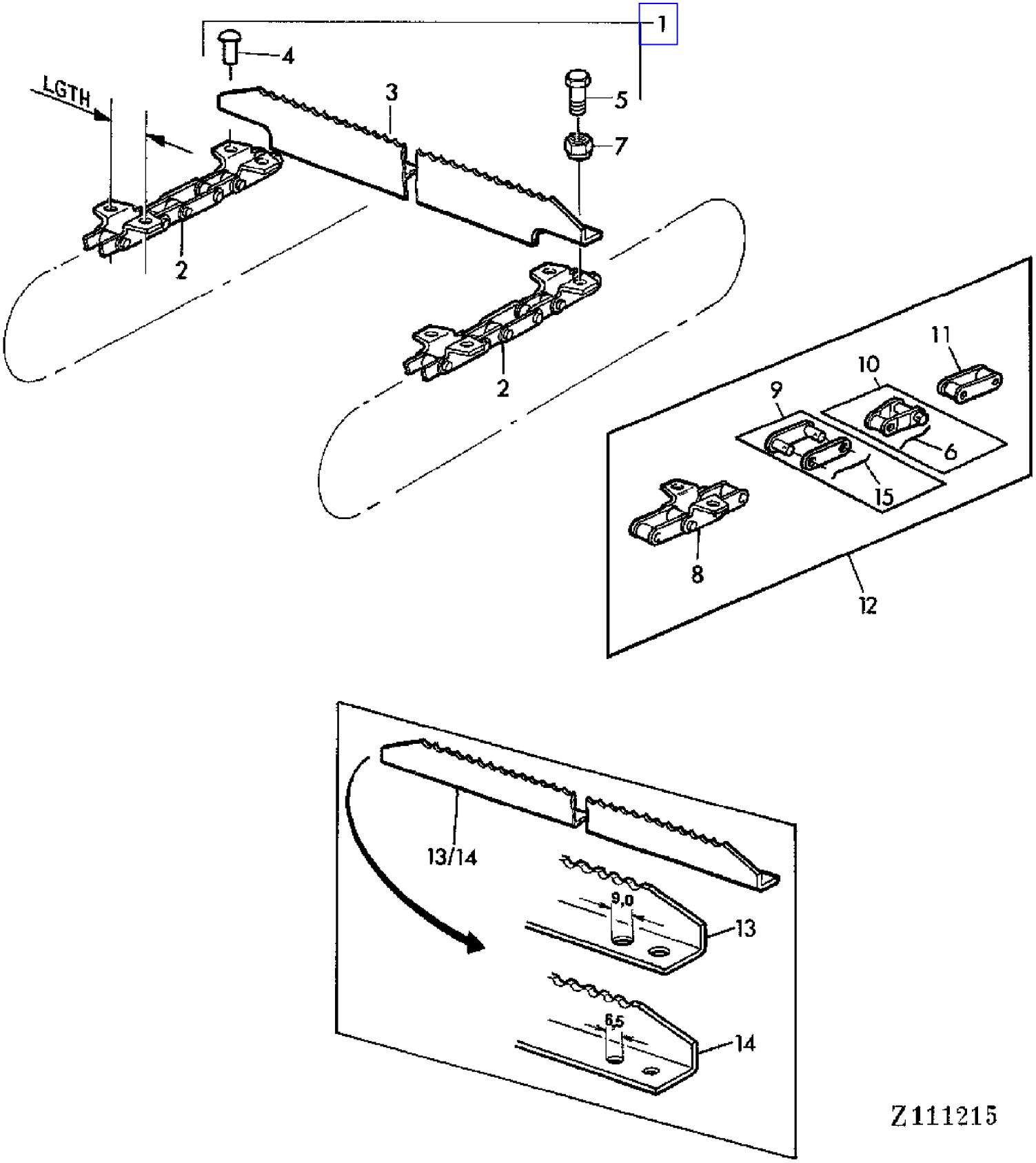

COPYRIGHT©1994 - 2008 DEERE & COMPANY Moline, Illinois All rights reserved

(3F24) FEEDER CONVEYOR CHAIN
CHAINES ET CORNIERES DU CONVOYEUR
SCHRAEGFOERDERKETTE
CATENA DEL CONVOGLIATORE TRAVERSINE
CADENA Y LISTON DE ARRASTRE DEL ELEVADOR DE MIES
INMATNINGSELEVATORKEDJA

KEY	PART NO.	PART NAME	QTY	SERIAL NO.			955	REMARKS
1	AZ30144	GATHERER CHAIN	1				X	INCL KEYS 2,3,5,7, L = 87
	AZ18672	GATHERER CHAIN	1		-	010731	X	(ORD (4) AZ24233, AZ27683)
	AZ24714	LINK CHAIN	1	010732	-	019154	X	(ORD AZ27683)
	AZ27683	LINK CHAIN	1	019155	-	026722	X	(SUB FOR AZ24714)
2	AZ24239	GATHERER CHAIN	2				X	L = 87, LGTH = 58 MM
	AZ18658	GATHERER CHAIN	2		-	010731	X	L = 87, LGTH = 50 MM
	AZ24718	GATHERER CHAIN	2	010732	-	019154	X	L = 86, LGTH = 50 MM
	AZ24716	GATHERER CHAIN	2	019155	-	026722	X	L = 85, LGTH = 58 MM
3	Z38440	SLAT	15	019155	-		X	(FOR AZ24239, AZ24716)
4	16M2523	RIVET	AR				X	6X15MM
5	19M7284	CAP SCREW	AR				X	M8X18
6	Z44617	WIRE	AR				X	
7	14M7166	LOCK NUT	AR				X	M8
8	AZ24230	LINK	AR				X	(FOR AZ24239, AZ24716)
	AL15490	LINK	AR				X	(FOR AZ18658, AZ24718)
9	AZ24232	CHAIN LINK	AR				X	(FOR AZ24239, AZ24716)
	AL15481	CHAIN LINK	AR				X	(FOR AZ18658, AZ24718)
10	AZ24233	CHAIN LINK	AR				X	(FOR AZ24239, AZ24716)
	AL15482	CHAIN LINK	AR				X	(FOR AZ18658, AZ24718)
11	AZ24234	LINK	AR				X	(FOR AZ24239, AZ24716)
	AL15479	LINK	AR				X	(FOR AZ18658, AZ24718)
12	AZ24236	GATHERER CHAIN	AR				X	INCL KEYS 8, (5) 9,10, (3) 11 (FOR AZ24239, AZ24716)
	AL15476	LINK CHAIN	AR				X	INCL KEYS 8, (5) 9,10, (5) 11 (FOR AZ18658, AZ24718)
13	Z30160	SLAT	22		-	019154	X	
14	Z40693	SLAT	22		-	019154	X	
15	Z41567	WIRE	AR				X	

COPYRIGHT©1994 - 2008 DEERE & COMPANY Moline, Illinois All rights reserved

(3G02) FEEDER CONVEYOR CHAIN
CHAINES ET CORNIERES DU CONVOYEUR
SCHRAEGFOERDERERKETTE T-PROFIL
CATENA DEL CONVOGLIATORE TRAVERSINE A T
CADENA Y LISTON DE ARRASTRE EN T DEL ELEVADOR DE MIES
INMATNINGSELEVATORKEDJA,PROFIL T

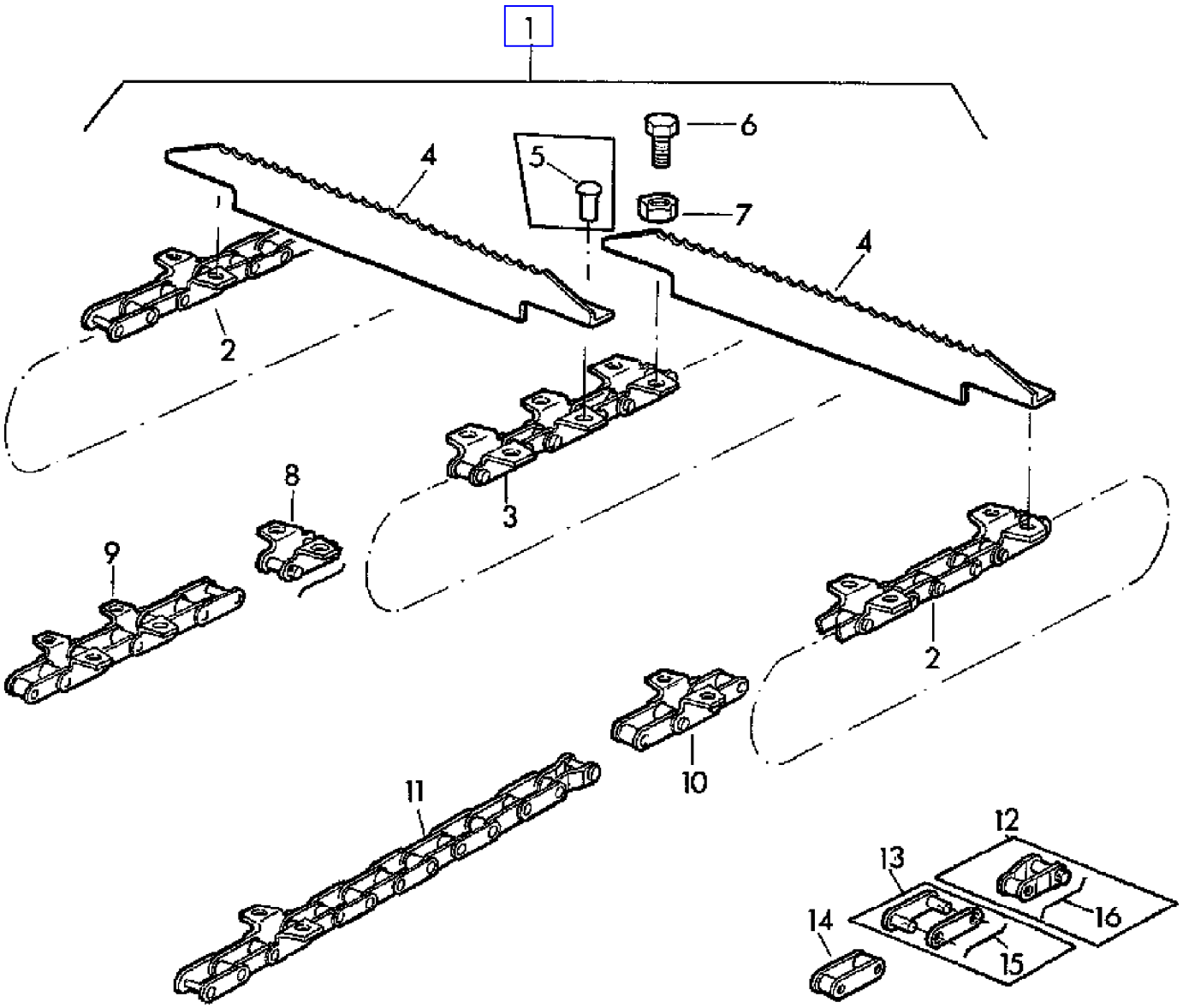

Z 105199

COPYRIGHT©1994 - 2008 DEERE & COMPANY Moline, Illinois All rights reserved

(3G02) FEEDER CONVEYOR CHAIN
CHAINES ET CORNIERES DU CONVOYEUR
SCHRAEGFOERDERERKETTE T-PROFIL
CATENA DEL CONVOGLIATORE TRAVERSINE A T
CADENA Y LISTON DE ARRASTRE EN T DEL ELEVADOR DE MIES
INMATNINGSELEVATORKEDJA,PROFIL T

KEY	PART NO.	PART NAME	QTY	SERIAL NO.			955	REMARKS
1	AZ24242	GATHERER CHAIN	1		-	010731	X	INCL KEYS 2-7, L = 87
	AZ24237	GATHERER CHAIN	1		-	010731	X	(A) INCL KEYS 2-7, L = 100 (SUB FOR AZ22616)
	AZ24715	LINK CHAIN	1	010732	-	019172	X	(B) INCL KEYS 2-7, L = 85
	AZ24728	GATHERER CHAIN	1	010732	-	025572	X	(A) INCL KEYS 2-7, L = 98
	AZ24237	GATHERER CHAIN	1	025573	-		X	(A) INCL KEYS 2-7, L = 100
	AZ24242	GATHERER CHAIN	1	026723	-		X	INCL KEYS 2-4,6,7, L = 87
2	AZ24239	GATHERER CHAIN	2		-	010731	X	L = 87 (SUB FOR AZ22621)
	AZ24244	GATHERER CHAIN	2		-	010731	X	(A) L = 100 (SUB FOR AZ22619)
	AZ24716	GATHERER CHAIN	2	010732	-	019172	X	(B) L = 85
	AZ24734	GATHERER CHAIN	2	010732	-	025572	X	(A) L = 98
	AZ24244	GATHERER CHAIN	2	025573	-		X	(A) L = 100
	AZ24239	GATHERER CHAIN	2	026723	-		X	L = 87
3	AZ24240	GATHERER CHAIN	1		-	010731	X	L = 87 (SUB FOR AZ22622)
	AZ24243	GATHERER CHAIN	1		-	010731	X	(A) L = 100 (SUB FOR AZ22620)
	AZ24717	GATHERER CHAIN	1	010732	-	019172	X	(B) L = 85
	AZ24733	GATHERER CHAIN	1	010732	-	025572	X	(A) L = 98
	AZ24243	GATHERER CHAIN	1	025573	-		X	(A) L = 100
	AZ24240	GATHERER CHAIN	1	026723	-		X	L = 87
4	Z33620	SLAT	AR				X	(A)
	Z33620	SLAT	30		-	019172	X	(B)
5	16M2545	RIVET	AR				X	8X15MM
6	19M7284	CAP SCREW	AR				X	M8X18
7	14M7166	LOCK NUT	AR				X	M8
8	AZ24231	CHAIN LINK	AR				X	(SUB FOR AZ24146)
9	AZ24235	GATHERER CHAIN	AR				X	INCL KEY (2) 8,13, (3) 14 (SUB FOR AZ24148)
10	AZ24230	LINK	AR				X	(SUB FOR AZ24084)
11	AZ24236	GATHERER CHAIN	AR				X	INCL KEY 9,12, (5) 13, (5) 14 (SUB FOR AZ24085)
12	AZ24233	CHAIN LINK	AR				X	(SUB FOR AZ24082)
13	AZ24232	CHAIN LINK	1				X	(SUB FOR AZ24083)
14	AZ24234	LINK	AR				X	(SUB FOR AZ24081)
15	Z41567	WIRE	AR				X	
16	Z44617	WIRE	AR				X	

(A) FOR LONG FEEDER CONVEYOR
POUR CONVOYEUR D'ALIMENTATION LONG
FUER SCHRAEGFOERDERER LANG
PER CONVOGLIATORE LUNGO
PARA ELEVADOR DE MIES LARGO
FOR LANG INMATNINGSELEVATOR

(B) REMAINS AS SPECIAL EQUIPMENT
RESTE DISPONIBLE EN OPTION
BLEIBT ALS SONDERAUSRUESTUNG BESTEHEN
RIMANE COME EQUIP. SPECIALE
SIGUE SIENDO USADO COMO EQUIPO ESPECIAL
BLIVS SOM EXTRA UTRUSTNING

COPYRIGHT©1994 - 2008 DEERE & COMPANY Moline, Illinois All rights reserved

(3F20) FEEDER CONVEYOR DRIVE
ENTRAINEMENT DU CONVOYEUR
SCHRAEGFOERDERER-ANTRIEB
COMANDO CONVOGLIATORE
TRANSMISION DEL ELEVADOR DE MIES
DRIVNING AV INMATNINGSELEVATOR

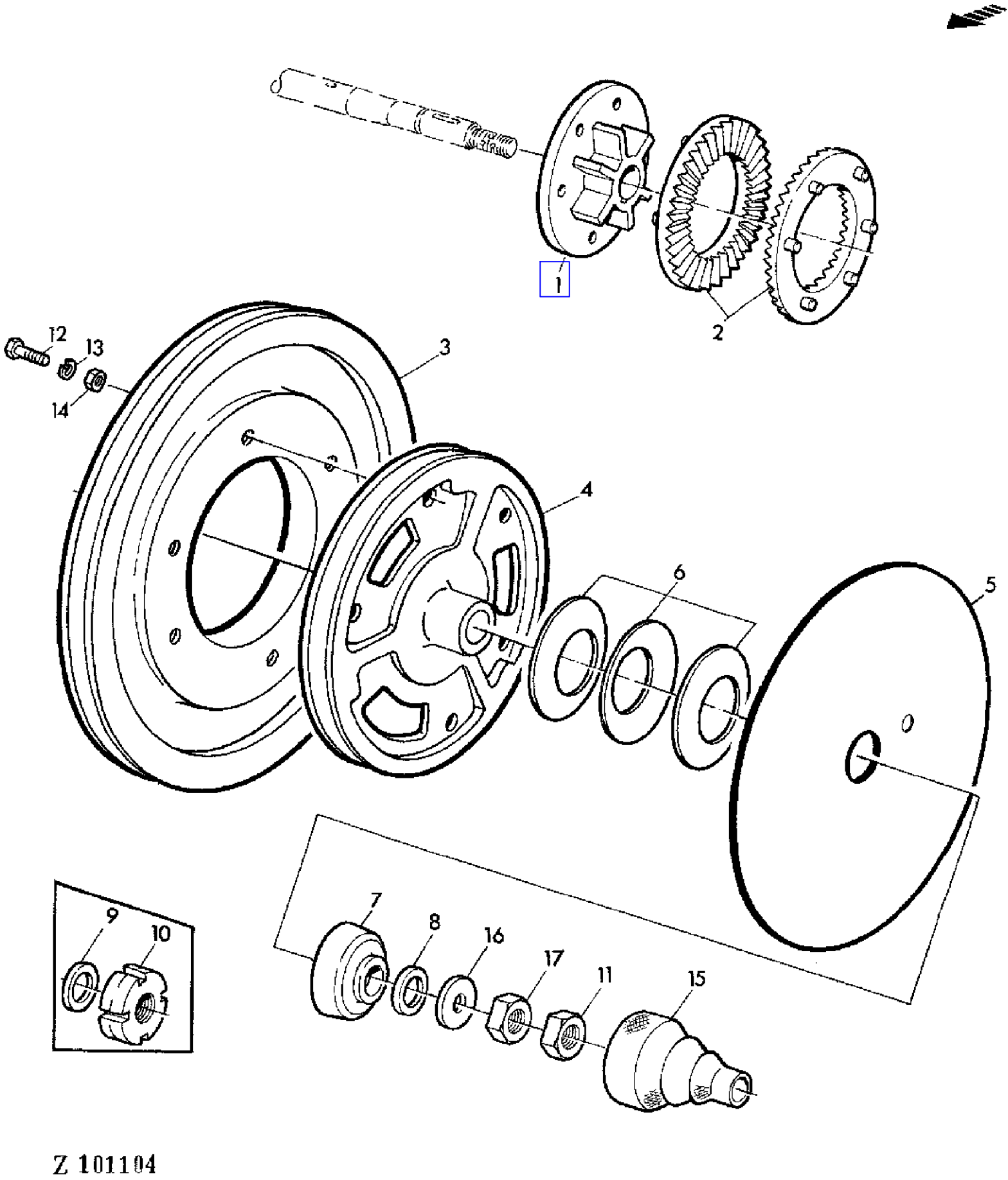

COPYRIGHT©1994 - 2008 DEERE & COMPANY Moline, Illinois All rights reserved

(3F20) FEEDER CONVEYOR DRIVE
ENTRAINEMENT DU CONVOYEUR
SCHRAEGFOERDERER-ANTRIEB
COMANDO CONVOGLIATORE
TRANSMISION DEL ELEVADOR DE MIES
DRIVNING AV INMATNINGSELEVATOR

KEY	PART NO.	PART NAME	QTY	SERIAL NO.			955	REMARKS
1	Z10889	DRIVER	1				X	
2	Z10847	SLIP CLUTCH	2				X	
3	AZ10328	PULLEY	1				X	
4	Z10887	PULLEY	1		-	024652	X	
	Z11257	PULLEY	1	024653	-		X	
5	Z34743	GUARD	1				X	
6	Z29634	DISK SPRING	3				X	
7	Z10775	THRUST WASHER	1				X	
8	Z31187	WASHER	1				X	
9	24M7127	WASHER	1		-	025057	X	25X44X4MM
10	Z10776	NUT	1		-	025057	X	
11	14M7212	NUT	1				X	M24
12	19M7322	CAP SCREW	6				X	M8X35
13	12M7008	LOCK WASHER	6				X	8MM
14	14M7029	NUT	6				X	M8
15	Z35052	BOOT	1				X	
16	Z38832	WASHER	1	025058	-		X	
17	14M7143	NUT	1	025058	-		X	M24 |

COPYRIGHT©1994 - 2008 DEERE & COMPANY Moline, Illinois All rights reserved

(3F22) FEEDER CONVEYOR DRUM(LOWER)
ROULEAU INFERIEUR DU CONVOYEUR
SCHRAEGFOERDERERWALZE UNTEN
TAMBURO INFERIORE CONVOGLIATORE
EJE INFERIOR CON TAMBOR DEL ELEVADOR D MIES
INMATNINGSELEVATORNS NEDRE TRUMMA

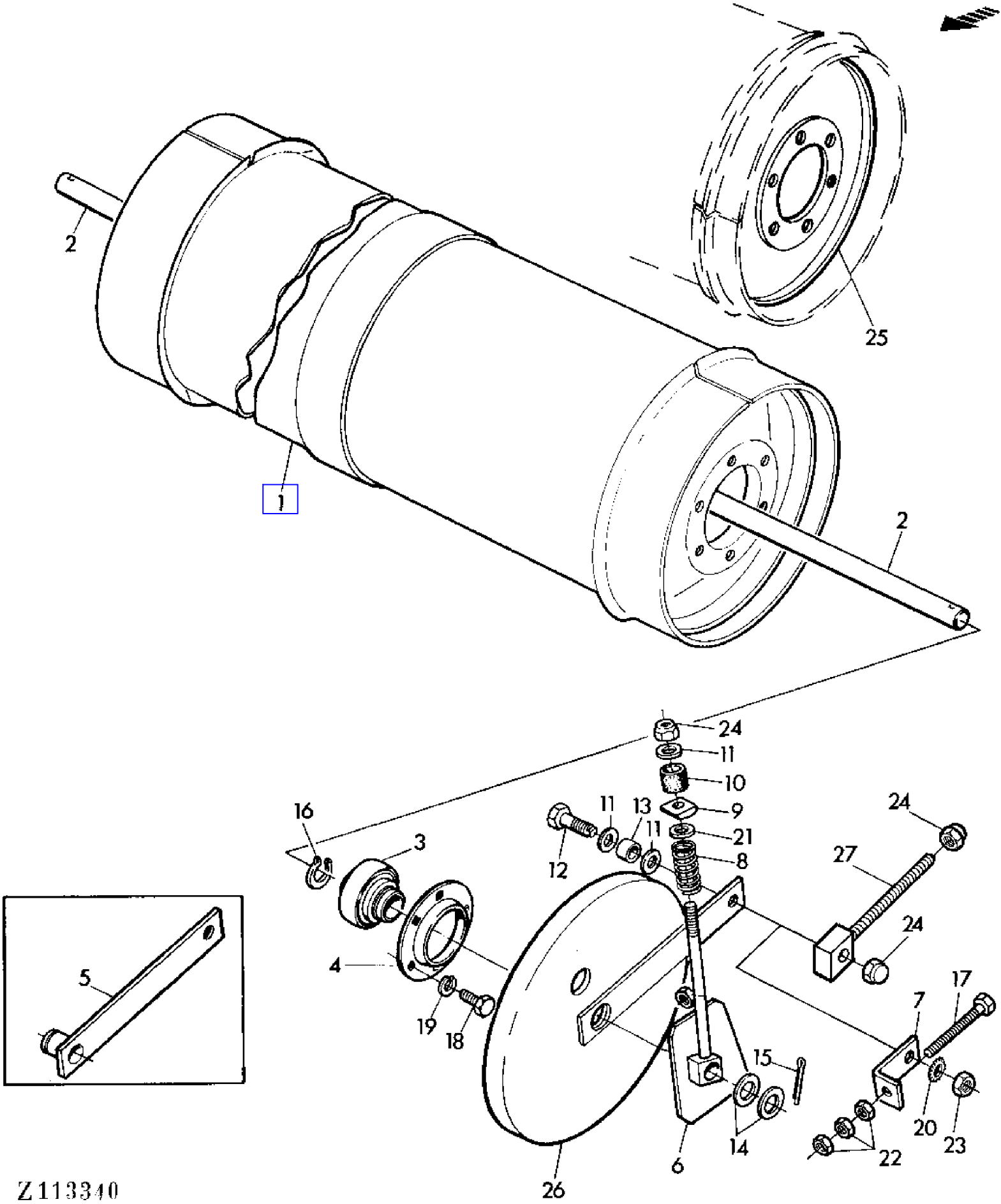

COPYRIGHT©1994 - 2008 DEERE & COMPANY Moline, Illinois All rights reserved

(3F22) FEEDER CONVEYOR DRUM(LOWER)
ROULEAU INFERIEUR DU CONVOYEUR
SCHRAEGFOERDERERWALZE UNTEN
TAMBURO INFERIORE CONVOGLIATORE
EJE INFERIOR CON TAMBOR DEL ELEVADOR D MIES
INMATNINGSELEVATORNS NEDRE TRUMMA

KEY	PART NO.	PART NAME	QTY	SERIAL NO.			955	REMARKS
1	AZ21717	DRUM	1		-	012311	X	(ORD AZ25930 W/ (2) AZ25927)
	AZ26878	DRUM	1	012312	-		X	(SUB FOR AZ21717, AZ25930)
2	Z30137	SHAFT	1				X	
3	JD39104	BALL BEARING	2				X	
4	Z44269	PRESSED FLANGED HOUSING	2				X	(SUB FOR Z30769, Z37382)
5	AZ18660	LEVER	2		-	012311	X	(ORD AZ25927)
6	AZ18659	ADJUSTER	1				X	RH
	AZ18786	ADJUSTER	1				X	LH
7	Z30126	ANGLE	2		-	XXXX	X	
	Z38536	ANGLE	2	XXXX	-		X	
8	Z44511	COMPRESSION SPRING	2				X	(SUB FOR Z34419)
9	Z10683	PLATE	2				X	
10	P49545	BUSHING	2				X	
11	L18889	WASHER	6				X	
12	Z30519	CAP SCREW	2				X	
	Z47801	CAP SCREW	1				X	(FOR AZ40289)
13	Z24862	SPACER	2				X	
14	Z24651	WASHER	4				X	
15	11M7037	COTTER PIN	2				X	6X40MM
16	40M1833	SNAP RING	2				X	35X1,5MM
17	19M7485	CAP SCREW	2				X	M12X110
18	19M7166	CAP SCREW	AR				X	M10X20
19	12M7013	LOCK WASHER	AR				X	10MM
20	12M7038	LOCK WASHER	2				X	16,5MM
21	24M7053	WASHER	2				X	17MM
22	14M7031	NUT	6				X	M12
23	14M7142	NUT	2				X	M16
24	14M7170	LOCK NUT	AR				X	M16
25	AZ26295	HUB	2				X	(SUB FOR AZ21715)
26	AZ25927	SUPPORT	2	012312	-		X	(SUB FOR AZ18660)
27	AZ38076	EYEBOLT	1				X	(FOR AZ40289)

COPYRIGHT©1994 - 2008 DEERE & COMPANY Moline, Illinois All rights reserved

(3F06) FEEDER CONVEYOR HOUSING
CARTER DE CONVOYEUR D'ALIMENTATION
SCHRAEGFOERDERER-GEHAEUSE
CASSA CONVOGLIATORE
CARCASA DEL ELEVADOR DE MIES
INMATNINGSKANAL

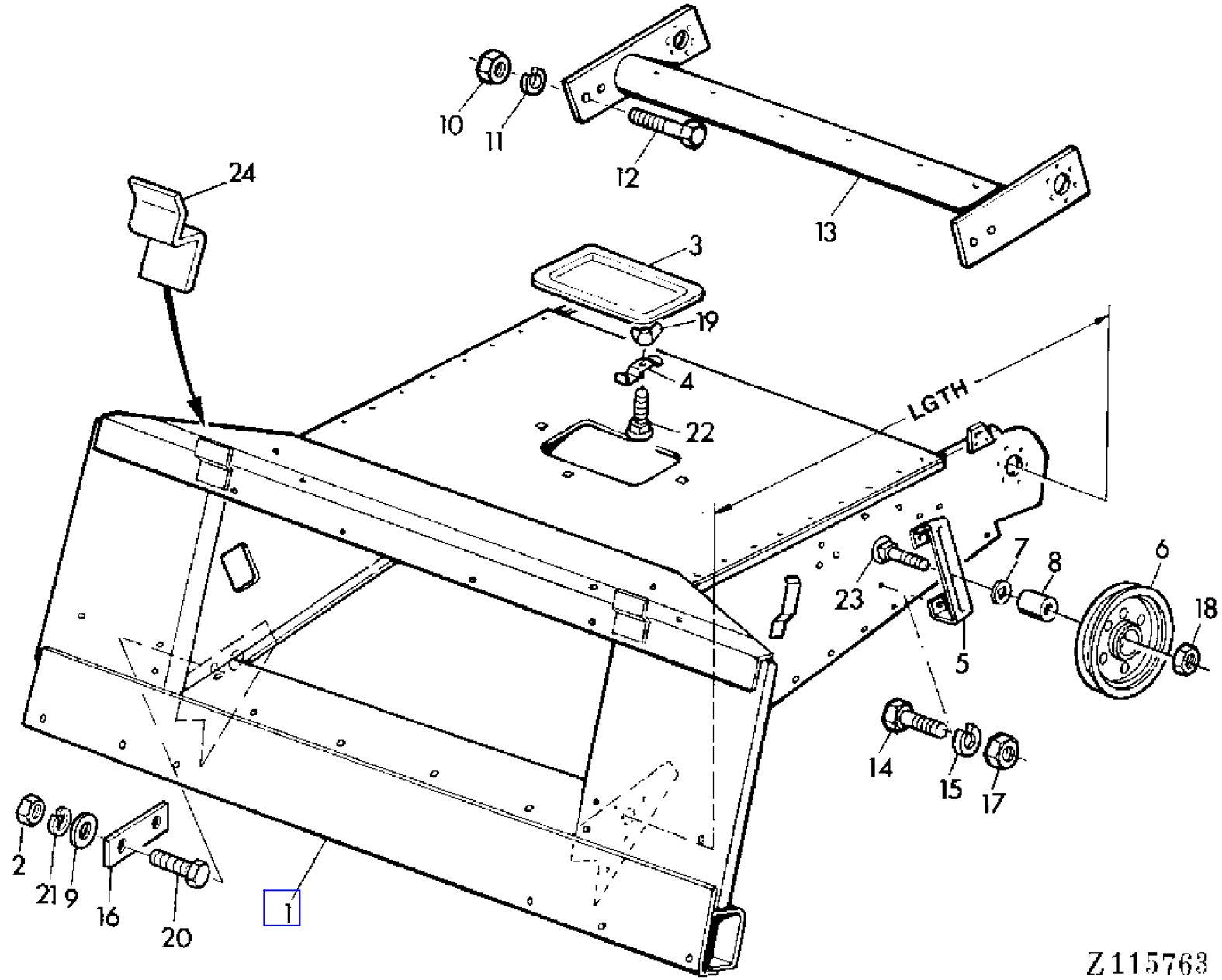

COPYRIGHT©1994 - 2008 DEERE & COMPANY Moline, Illinois All rights reserved

(3F06) FEEDER CONVEYOR HOUSING
CARTER DE CONVOYEUR D'ALIMENTATION
SCHRAEGFOERDERER-GEHAEUSE
CASSA CONVOGLIATORE
CARCASA DEL ELEVADOR DE MIES
INMATNINGSKANAL

KEY	PART NO.	PART NAME	QTY	SERIAL NO.			955	REMARKS
1	AZ23332	HOUSING	1		-	010731	X	(ORD AZ30122)
	AZ40289	CONVEYOR	1		-	010731	X	(A) (SUB FOR AZ23335, AZ24772) (ORD W/ (2) AZ38076, (2) Z47801, (4) 14M7170)
	AZ24771	CONVEYOR	1	010732	-	026722	X	LGTH = 1400 MM (ORD AZ30122 W/ AZ30320)
	AZ40289	CONVEYOR	1	010732	-	025572	X	(A) (SUB FOR AZ23335, AZ24772, AZ31813) (ORD AZ30325 W/ (2) AZ38076 (2) Z47801, (4) 14M7170)
	AZ30122	FEEDER HOUSE	1	026723	-	049592	X	
	AZ38193	CONVEYOR	1	049593	-		X	
	AZ40289	CONVEYOR	1	025573	-		X	(A) (SUB FOR AZ23335, AZ24772) (ORD W/ (2) AZ38076, (2) Z47801,
2	14M7029	NUT	1				X	M8
3	Z20713	COVER	1				X	
4	Z20367	CLAMP	4				X	
5	AZ18656	HOLDER	1				X	
6	AN30569	IDLER	1		-	032432	X	(ORD AZ29185 W/ 03M7212, 14M7170)
	AZ29185	IDLER	1	032433	-		X	(SUB FOR AN30569)
7	L18889	WASHER	1				X	
8	Z22659	SPACER	1				X	
9	24M7036	WASHER	2				X	9MM
10	14M7170	LOCK NUT	4				X	M16
11	12M7017	LOCK WASHER	4				X	16MM
12	19M7395	CAP SCREW	4				X	M16X40
13	AZ18651	STABILIZER	1				X	
14	19M7268	CAP SCREW	2				X	M12X25
15	12M7014	LOCK WASHER	2				X	12MM
16	Z36575	ANGLE	1				X	(SUB FOR Z23741)
17	14M7031	NUT	2				X	M12
18	14M7142	NUT	1				X	M16
19	14M7020	WING NUT	4				X	M8
20	19M7163	CAP SCREW	2				X	M8X25
21	12M7008	LOCK WASHER	2				X	8MM
22	03M7054	BOLT	4				X	M8X20
23	03M7212	BOLT	1				X	M16X75
24	Z35149	HOLDER	1				X	
..	AZ30320	KIT	1				X	AR, KIT
..	AZ30325	KIT	1				X	AR, KIT

(A) FOR LONG FEEDER CONVEYOR
POUR CONVOYEUR D'ALIMENTATION LONG
FUER SCHRAEGFOERDERER LANG
PER CONVOGLIATORE LUNGO
PARA ELEVADOR DE MIES LARGO
FOR LANG INMATNINGSELEVATOR

COPYRIGHT©1994 - 2008 DEERE & COMPANY Moline, Illinois All rights reserved

(3F18) FEEDER CONVEYOR UPPER SHAFT
ARBRE SUPERIEUR DU CONVOYEUR
OBERE SCHRAEGFOERDERER-WELLE
ALBERO SUPERIORE DEL CONVOGLIATORE
EJE SUPERIOR DEL ELEVADOR DE MIES
INMATNINGSELEVATORNS OEVRE AXEL

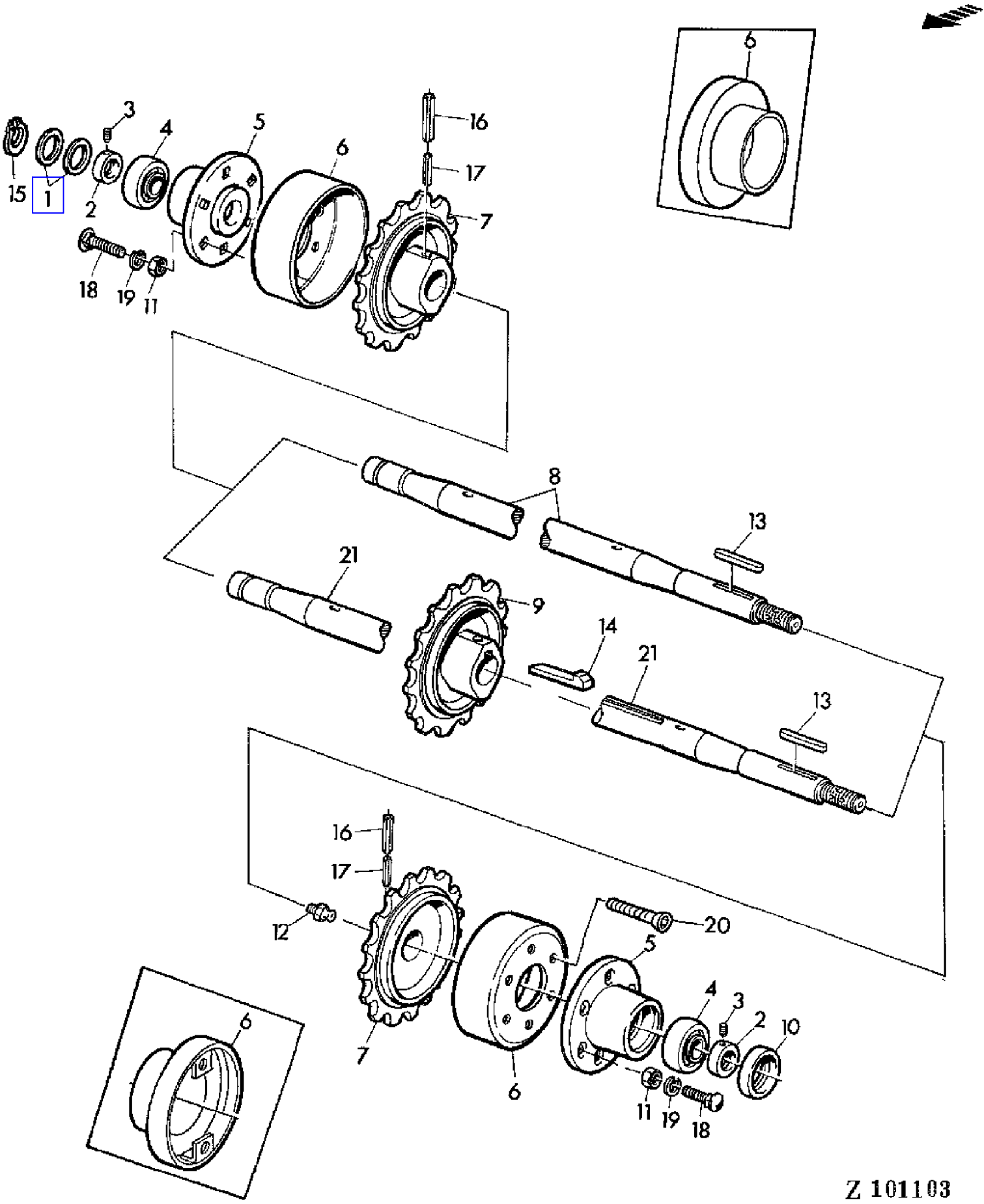

COPYRIGHT©1994 - 2008 DEERE & COMPANY Moline, Illinois All rights reserved

(3F18) FEEDER CONVEYOR UPPER SHAFT
ARBRE SUPERIEUR DU CONVOYEUR
OBERE SCHRAEGFOERDERER-WELLE
ALBERO SUPERIORE DEL CONVOGLIATORE
EJE SUPERIOR DEL ELEVADOR DE MIES
INMATNINGSELEVATORNS OEVRE AXEL

KEY	PART NO.	PART NAME	QTY	SERIAL NO.			955	REMARKS
1	Z22126	WASHER	AR				X	
2	AZ10045	ECCENTRIC LOCKING COLLAR	2				X	ASSY, INCL KEY 3
3	22H975	SET SCREW	2				X	
4	JD39103	BALL BEARING	2				X	
5	Z10682	CASE	2				X	
6	Z30124	DEFLECTOR	2		-	010731	X	
	AZ24713	DEFLECTOR	2	010732	-		X	
	AZ24713	DEFLECTOR	2	010732	-	025572	X	
	Z30124	DEFLECTOR	2	025573	-		X	
7	Z11543	CHAIN SPROCKET	2		-	010731	X	Z = 14, ID = 35 MM (SUB FOR Z10815)
	Z11544	CHAIN SPROCKET	2		-	010731	X	(A) Z = 14, ID = 40 MM (SUB FOR Z10816)
	Z11048	CHAIN SPROCKET	2		-	025572	X	(B) Z = 11, ID = 40 MM
	Z11048	CHAIN SPROCKET	2	010732	-	019172	X	(A) Z = 11, ID = 40 MM
	Z11046	CHAIN SPROCKET	2	010732	-	026722	X	Z = 11, ID = 35 MM
	Z11544	CHAIN SPROCKET	2	025573	-		X	(A) (B) Z = 14, ID = 40 MM (SUB FOR Z10816)
	Z11543	CHAIN SPROCKET	2	026723	-		X	Z = 14, ID = 35 MM (SUB FOR Z10815)
8	Z33439	SHAFT	1				X	OD = 35 MM
9	Z11545	CHAIN SPROCKET	1		-	010731	X	(A) Z = 14, ID = 40 MM (SUB FOR Z10842, Z11049)
	Z11047	CHAIN SPROCKET	1		-	025572	X	(B) Z = 11, ID = 40 MM
	Z11545	CHAIN SPROCKET	1	025573	-		X	(A) (B) Z = 14, ID = 40 MM (SUB FOR Z11049)
	Z11047	CHAIN SPROCKET	1	010732	-	019172	X	(A) Z = 11, ID = 40 MM
10	Z26541	SPACER	1				X	
11	14M7140	NUT	AR				X	M10
12	58M7006	LUBRICATION FITTING	1				X	M8X1
13	49M5426	SHAFT KEY	1				X	10X8X36MM
14	50M4203	SHAFT KEY	1				X	(A) 10X8X63MM
15	40M1831	SNAP RING	1				X	30X1,5MM
16	34M7073	SPRING PIN	2				X	10X65MM
17	34M7045	SPRING PIN	2				X	6X60MM
18	09M7003	BOLT	AR				X	M10X40
19	12M7013	LOCK WASHER	AR				X	10MM
20	19M7666	SCREW	4	010732	-		X	M10X40
21	Z33438	SHAFT	1				X	OD = 40 MM

(A) WITH MAIZE
POUR MAIS
BEI MAIS
PER MAIS
PARA MAIZ
VID MAJS

(B) FOR LONG FEEDER CONVEYOR
POUR CONVOYEUR D'ALIMENTATION LONG
FUER SCHRAEGFOERDERER LANG
PER CONVOGLIATORE LUNGO
PARA ELEVADOR DE MIES LARGO
FOER LANG INMATNINGSELEVATOR

COPYRIGHT©1994 - 2008 DEERE & COMPANY Moline, Illinois All rights reserved

(3F07) FEEDER HOUSE END COVER
CONVOYEUR D'ALIMENTATION-COVERCLE FINAL
SCHRAEGFOERDERER-ABSCHLUSSKLAPPE
COPERCHIO SUPERIORE PER COLLO ALIMENTATORE
ALIMENTADOR DE MIES-TAPA FINAL
OVRE LUCKA FOR INMATNINGSKANAL

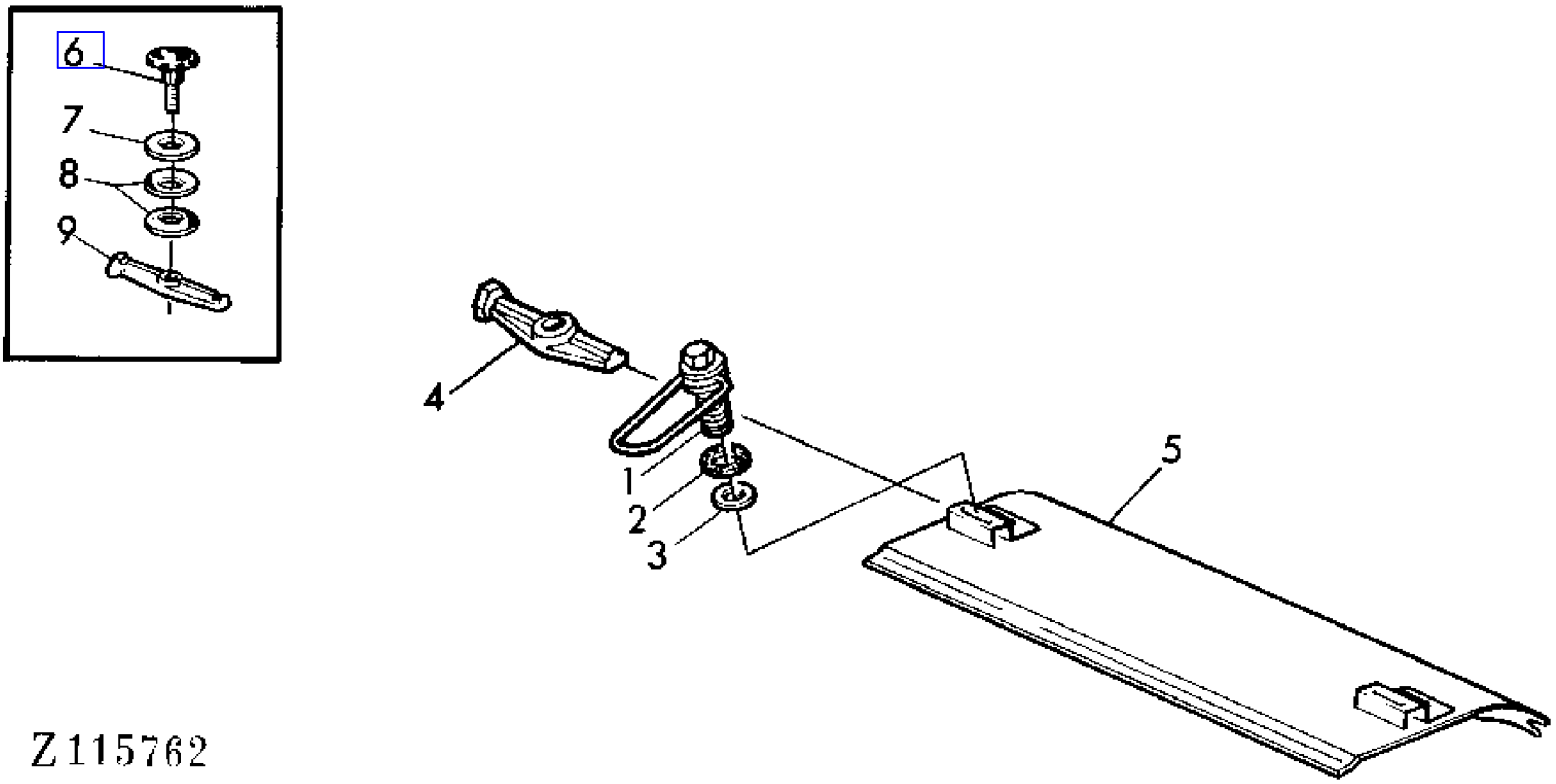

COPYRIGHT©1994 - 2008 DEERE & COMPANY Moline, Illinois All rights reserved

(3F07) FEEDER HOUSE END COVER
CONVOYEUR D'ALIMENTATION-COVERCLE FINAL
SCHRAEGFOERDERER-ABSCHLUSSKLAPPE
COPERCHIO SUPERIORE PER COLLO ALIMENTATORE
ALIMENTADOR DE MIES-TAPA FINAL
OVRE LUCKA FOR INMATNINGSKANAL

KEY	PART NO.	PART NAME	QTY	SERIAL NO.	955	REMARKS
1	AZ39183	SCREW	2		X	
2	Z35271	BUSHING	2		X	
3	Z21157	WASHER	4		X	
4	Z11852	RETAINER	2		X	
5	AZ38197	FLAP	1		X	(SUB FOR AZ23363)
6	AZ18662	HANDLE	2		X	
7	24M7047	WASHER	2		X	14MM
8	Z22631	DISK SPRING	4		X	
9	Z10681	LATCH	2		X	

COPYRIGHT©1994 - 2008 DEERE & COMPANY Moline, Illinois All rights reserved

(3D24) FILTER WITH 2ND CLEANING UNIT-AIR CONDITIONED CAB
FILTRE AVEC 2EME ELEMENT DE NETTOYAGE-CABINE DIMATISEE
FILTER BEI 2.REINIGUNG-KABINE MIT KLIMAANLAGE
FILTRO CON SECONDA PULIZIA-CABINA CONDIZIONATA
FILTRO CON 2A UNIDAD DE FILTRAJE-CABINA CON AIRE ACONDICIONA
FILTER MED TVA RENSNINGAR-HYTT MED LUFTKONDITIONERING

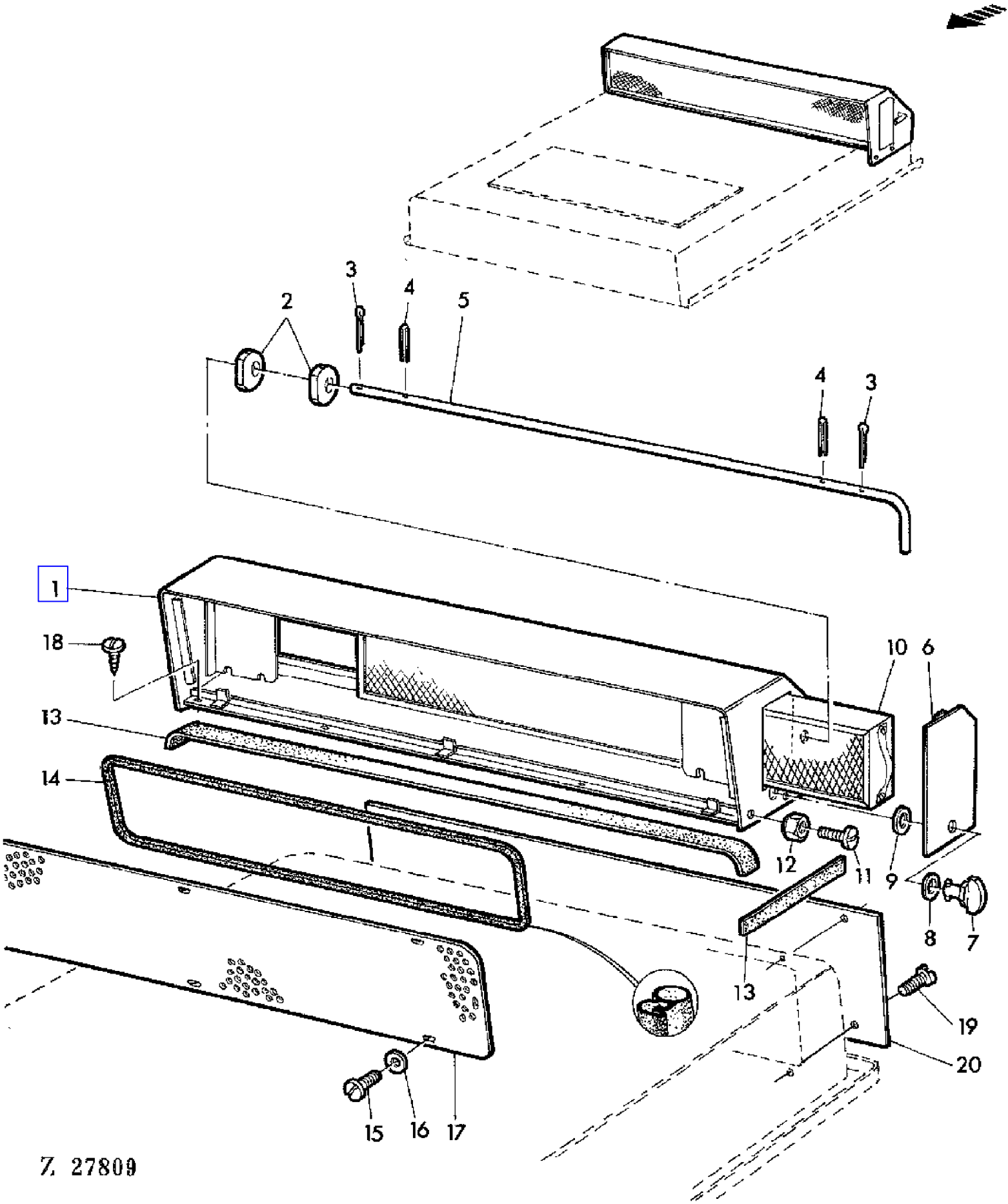

COPYRIGHT©1994 - 2008 DEERE & COMPANY Moline, Illinois All rights reserved

(3D24) FILTER WITH 2ND CLEANING UNIT-AIR CONDITIONED CAB
FILTRE AVEC 2EME ELEMENT DE NETTOYAGE-CABINE DIMATISEE
FILTER BEI 2.REINIGUNG-KABINE MIT KLIMAANLAGE
FILTRO CON SECONDA PULIZIA-CABINA CONDIZIONATA
FILTRO CON 2A UNIDAD DE FILTRAJE-CABINA CON AIRE ACONDICIONA
FILTER MED TVA RENSNINGAR-HYTT MED LUFTKONDITIONERING

KEY	PART NO.	PART NAME	QTY	SERIAL NO.	955	REMARKS
1	DA21385	HOUSING	1		X	
2	CA20331	GUIDE	2		X	
3	11M7020	COTTER PIN	2		X	4X22MM
4	34M7029	SPRING PIN	2		X	4X30MM
5	CA20247	ROD	1		X	
6	DA21400	COVER	1		X	
7	AE31927	STUD	1		X	
8	24M1254	WASHER	1		X	
9	E50846	LOCK WASHER	1		X	
10	AH80920	FILTER	1		X	
11	21M7031	SCREW	10		X	M6X15
12	14M7165	LOCK NUT	6		X	M6
13	CA20531	WEATHERSTRIP	1		X	20X4MMX3000MM
14	CA21487	GASKET	1		X	
15	CA20236	SCREEN	1		X	
16	24M7088	WASHER	6		X	5,5MM
17	21M7199	SCREW	6		X	M5X10
18	37M7029	SCREW	4		X	5,5X13
19	H82734	SCREW	6		X	
20	H81689	SHEET	1		X	

COPYRIGHT©1994 - 2008 DEERE & COMPANY Moline, Illinois All rights reserved

(PC4146) 955 Combine

(1H04) FINAL DRIVE
COMMANDE FINALE
ENDANTRIEB
RIDUZIONE FINALE
MANDO FINAL
SLUTVAXEL

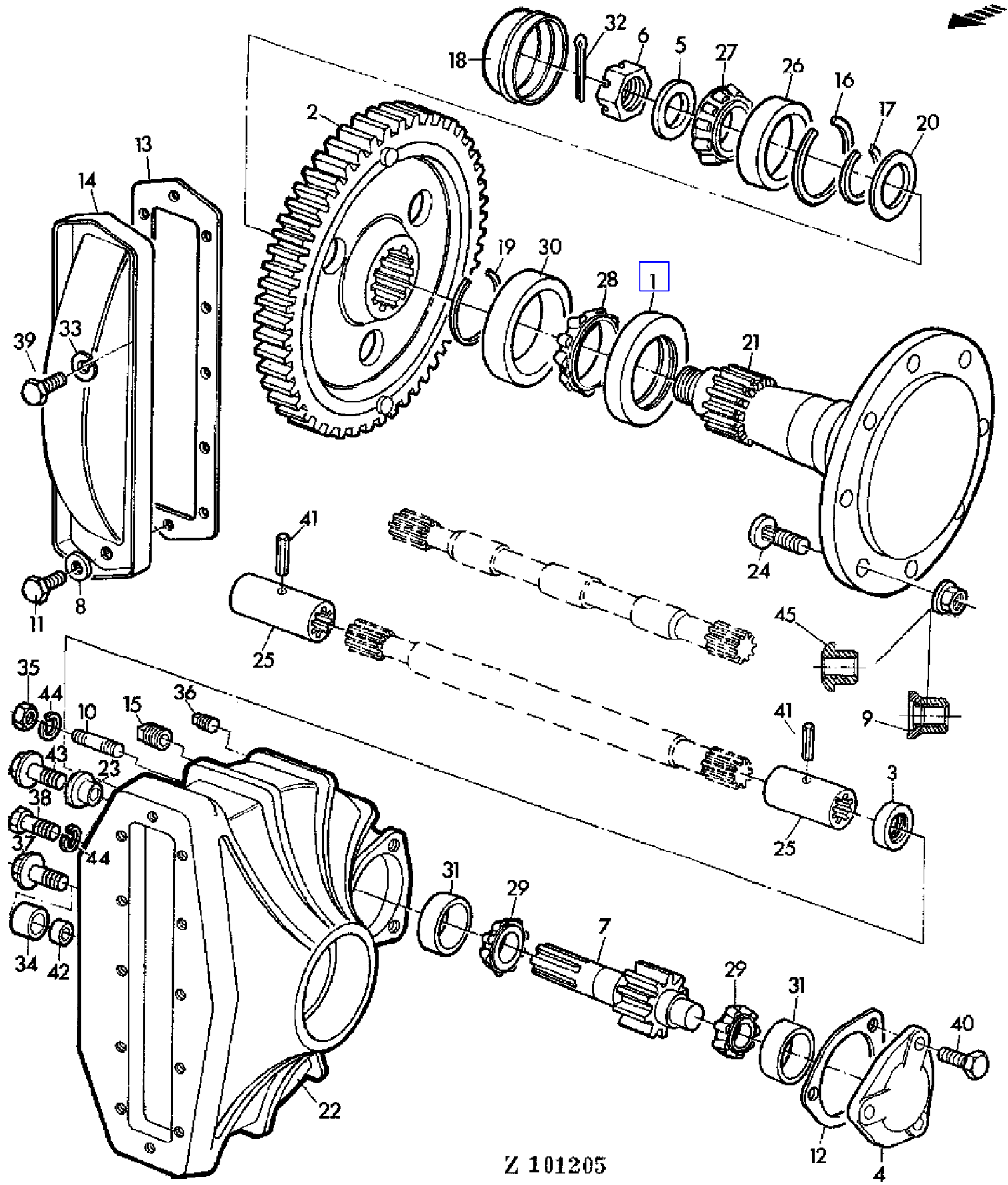

COPYRIGHT©1994 - 2008 DEERE & COMPANY Moline, Illinois All rights reserved

(PC4146) 955 Combine

(1H04) FINAL DRIVE
COMMANDE FINALE
ENDANTRIEB
RIDUZIONE FINALE
MANDO FINAL
SLUTVAXEL

KEY	PART NO.	PART NAME	QTY	SERIAL NO.	955	REMARKS
1	AH12089	PACKING	2		X	
2	AZ23265	GEAR	2		X	
3	T22069	SEAL	2		X	
4	H10022	HOUSING	2	- 005626	X	
5	H21870	WASHER	2		X	117/32"X2-3/4",1/4"
6	H21871	NUT	2		X	1-1/2"
7	Z10944	DRIVE SHAFT	2	- 005626	X	
8	H30194	WASHER	2		X	
9	14M7238	FLANGE NUT	16		X	M18X1,5
10	Z37924	STUD	2		X	(SUB FOR H36568)
11	H65076	CAP SCREW	2		X	5/16"X7/8"
12	P49122	SHIM	AR	- 005626	X	0.08MM
	P49122	SHIM	AR	- 005626	X	0.08MM
	P49121	SHIM	AR	- 005626	X	0.13MM
	P49120	SHIM	AR	- 005626	X	0.25MM
	P46359	SHIM	AR	- 005626	X	0.5MM
13	Z44261	GASKET	2		X	(SUB FOR P46362)
14	P46363	COVER	2		X	
15	P46369	FITTING	2		X	
16	P48692	SNAP RING	2		X	
17	P48697	SNAP RING	2		X	
18	P48698	CAP	2		X	
19	P48703	SNAP RING	2		X	
20	P49585	WASHER	2		X	2-1/2X3-3/16"
21	Z11284	HALF AXLE	2		X	(SUB FOR Z10770, Z28629)
22	Z10798	HOUSING	2	- 005626	X	
23	Z39355	BUSHING	2		X	
24	Z36742	WHEEL BOLT	16		X	(SUB FOR Z34488)
25	Z31218	SPACER	2	- 016667	X	
26	JD7425	BEARING CUP	2		X	
27	JD8161	BEARING CONE	2		X	(SUB FOR JD8103)
28	JD8191	BEARING CONE	2		X	
29	JD8194	BEARING CONE	4	- 005626	X	
30	JD8214	BEARING CUP	2		X	
31	JD8230	BEARING CUP	4	- 005626	X	
32	11H244	COTTER PIN	2		X	3/16"X2-1/2"
33	12H291	LOCK WASHER	24		X	5/16"
34	Z39560	BUSHING	4		X	
35	14H863	NUT	2		X	3/4"

(A) WITH RICE TRACKS
AVEC CHENILLES RIZ
BEI REISRAUPEN
CON CINGOLI RISO
CON TREN DE ORUGAS ARROZ
VID RIS-BAND

COPYRIGHT©1994 - 2008 DEERE & COMPANY Moline, Illinois All rights reserved

(1H04) FINAL DRIVE
COMMANDE FINALE
ENDANTRIEB
RIDUZIONE FINALE
MANDO FINAL
SLUTVAXEL

KEY	PART NO.	PART NAME	QTY	SERIAL NO.	955	REMARKS
36	15H584	PIPE PLUG	2		X	1/2"
37	Z39562	CAP SCREW	4		X	3/4"-10UNC 2A
38	19H1374	CAP SCREW	8		X	3/4"X2"
39	19H1813	CAP SCREW	22		X	5/16"X5/8"
40	19H1821	CAP SCREW	6		X	7/16"X1-1/4"
41	34H107	SPRING PIN	4		X	1/4"X1-3/4"
42	Z39561	BUSHING	2		X	(SUB FOR Z29008)
43	Z39677	CAP SCREW	2		X	
44	12H312	LOCK WASHER	10		X	3/4"
45	14M7237	NUT	16		X	(A) M18X1,5

(A) WITH RICE TRACKS
AVEC CHENILLES RIZ
BEI REISRAUPEN
CON CINGOLI RISO
CON TREN DE ORUGAS ARROZ
VID RIS-BAND

COPYRIGHT©1994 - 2008 DEERE & COMPANY Moline, Illinois All rights reserved

(1H08) FINAL DRIVE
COMMANDE FINALE
ENDANTRIEB
RIDUZIONE FINALE
MANDO FINAL
SLUTVAXEL

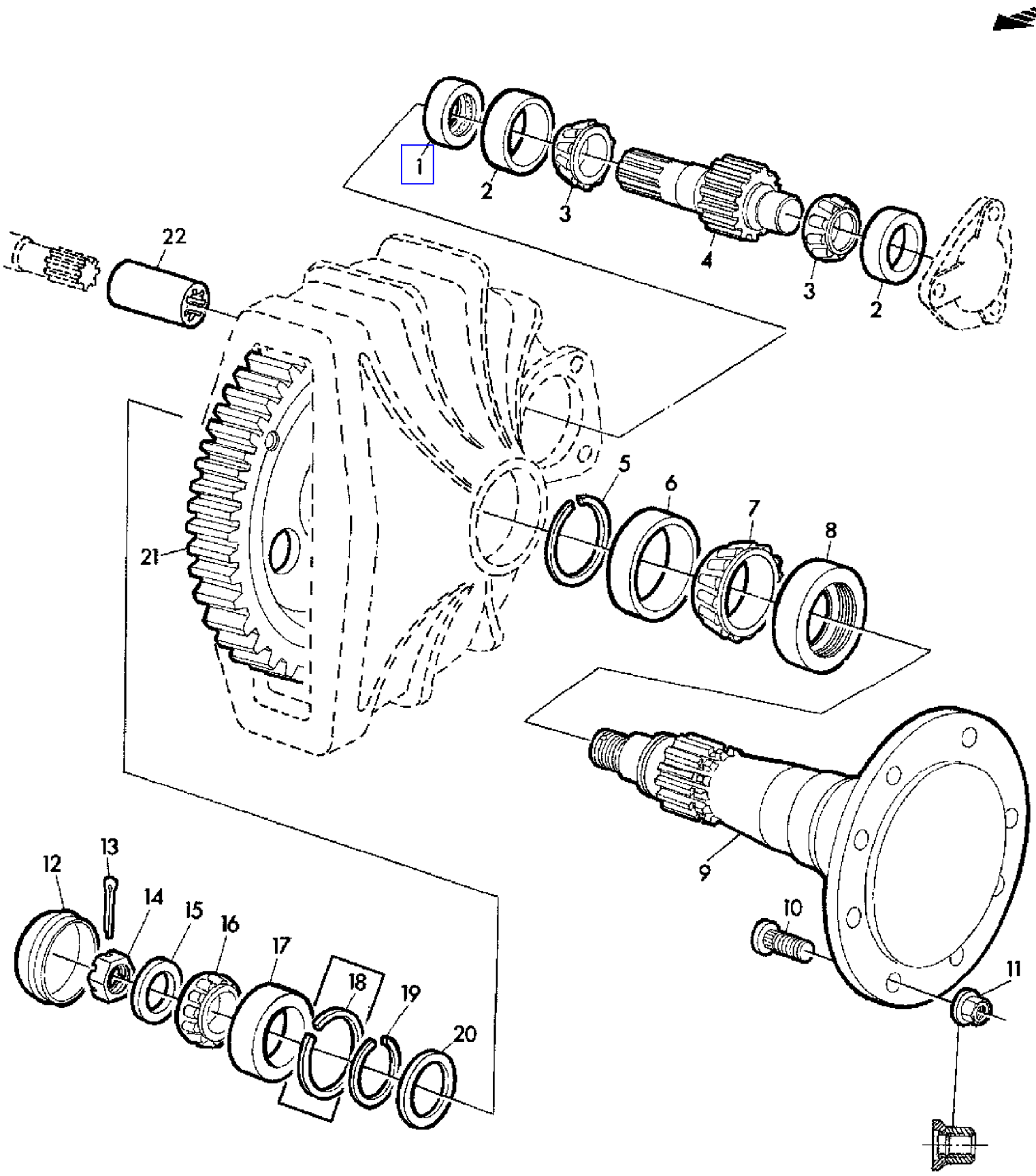

COPYRIGHT©1994 - 2008 DEERE & COMPANY Moline, Illinois All rights reserved

(PC4146) 955 Combine

(1H08) FINAL DRIVE
COMMANDE FINALE
ENDANTRIEB
RIDUZIONE FINALE
MANDO FINAL
SLUTVAXEL

KEY	PART NO.	PART NAME	QTY	SERIAL NO.			955	REMARKS
1	AH81622	SEAL	2				X	(SUB FOR T22069)
2	JD7266	BEARING CUP	4	005627	-		X	
3	JD7222	BEARING CONE	4	005627	-		X	
4	H65260	PINION	2	005627	-	016667	X	
	Z11271	PINION	2	016668	-	XXXX	X	(SUB FOR Z11171)
	Z11315	PINION	2	XXXX	-		X	(SUB FOR Z11171, Z11271)
5	P48703	SNAP RING	2				X	
6	JD8214	BEARING CUP	2				X	
7	JD8191	BEARING CONE	2				X	
8	AH12089	PACKING	2				X	
9	Z11284	HALF AXLE	2				X	(SUB FOR Z10770, Z28629)
10	Z36742	WHEEL BOLT	16				X	(SUB FOR Z34488)
11	14M7238	FLANGE NUT	16				X	M18X1,5
12	P48698	CAP	2				X	
13	11H244	COTTER PIN	2				X	3/16"X2-1/2"
14	H21871	NUT	2				X	1-1/2"
15	H21870	WASHER	2				X	1-17/32"X2-3/4",1/4"
16	JD8161	BEARING CONE	2				X	(SUB FOR JD8103)
17	JD7425	BEARING CUP	2				X	
18	P48692	SNAP RING	2		-	XXXX	X	
19	P48697	SNAP RING	2				X	
20	P49585	WASHER	2				X	2-1/2"X3-3/16"
21	AZ23265	GEAR	2				X	
22	Z37932	SPLINED COUPLING	4	016668	-		X	

COPYRIGHT©1994 - 2008 DEERE & COMPANY Moline, Illinois All rights reserved

(1H06) FINAL DRIVE HOUSING
CARTER DE COMMANDE FINALE
ENDANTRIEBSGEHAEUSE
SCATOLA RIDUZIONE FINALE
CAJA DE MANDO FINAL
SLUTVAXELHUS

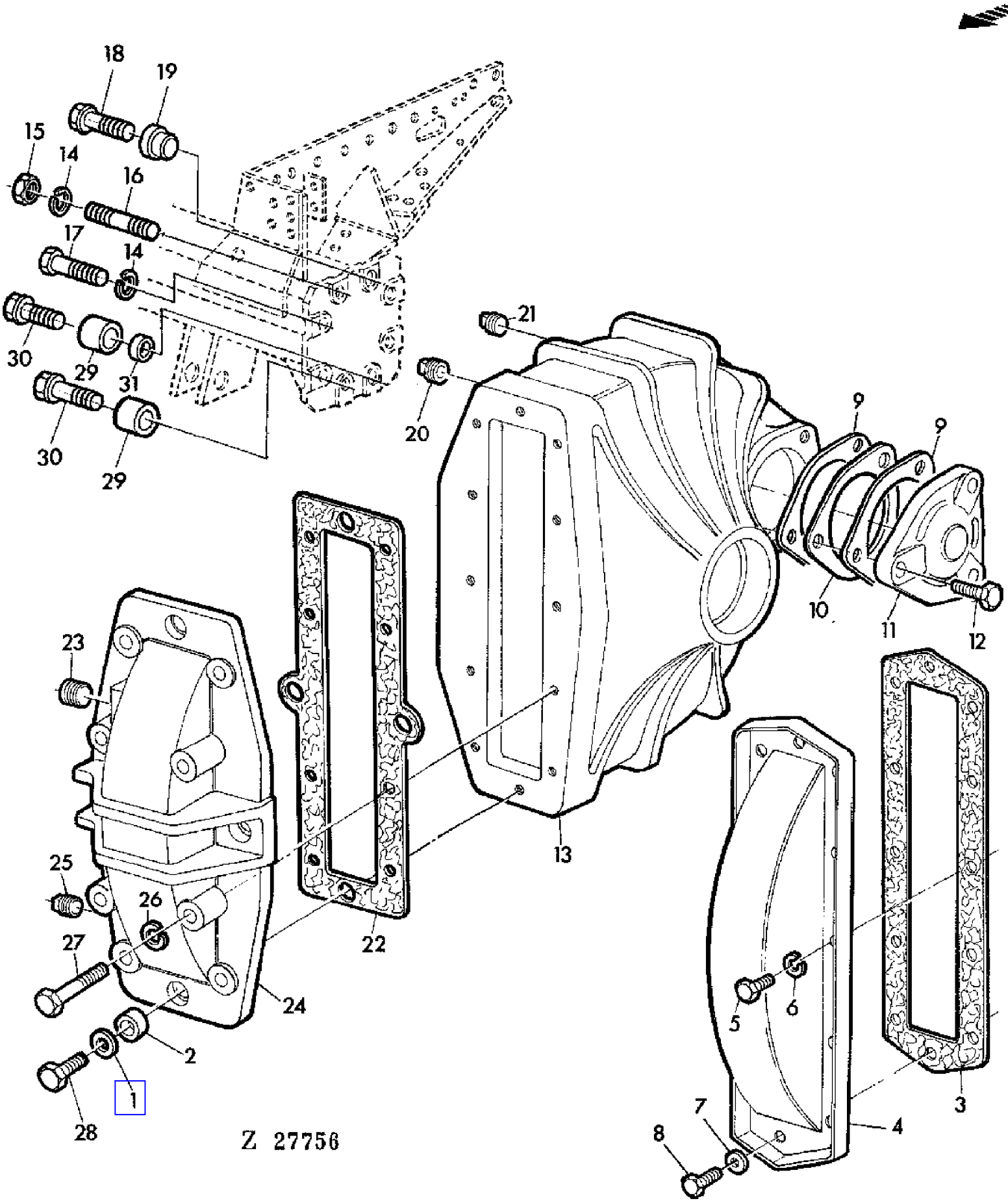

COPYRIGHT©1994 - 2008 DEERE & COMPANY Moline, Illinois All rights reserved

(PC4146) 955 Combine

(1H06) FINAL DRIVE HOUSING
CARTER DE COMMANDE FINALE
ENDANTRIEBSGEHAEUSE
SCATOLA RIDUZIONE FINALE
CAJA DE MANDO FINAL
SLUTVAXELHUS

KEY	PART NO.	PART NAME	QTY	SERIAL NO.			955	REMARKS
1	E12817	WASHER	8				X	
2	H22785	BUSHING	8				X	
3	Z44261	GASKET	1				X	(FOR Z10945, Z11386) (SUB FOR P46362)
4	P46363	COVER	1				X	(FOR Z10945, Z11386)
5	19H1813	CAP SCREW	22				X	5/16"X5/8" (FOR Z10945, Z11386)
6	12H291	LOCK WASHER	24				X	1/16" (FOR Z10945, Z11386)
7	H30194	WASHER	2				X	(FOR Z10945, Z11386)
8	H65076	CAP SCREW	2				X	5/16"X7/8" (FOR Z10945, Z11386)
9	Z34380	SHIM	4	005627	-		X	0.08MM
10	Z34378	SHIM	AR	005627	-		X	0.13MM
	Z34377	SHIM	AR	005627	-		X	0.25MM
	Z34376	SHIM	AR	005627	-		X	0.50MM
11	Z10941	QUILL	2	005627	-		X	
12	19H1821	CAP SCREW	6				X	7/16"X1-1/4"
13	.....	HOUSING	2	005627	-	XXXX	X	(MARKED Z11386) NSEP (ORD AZ30974) (SUB FOR Z10945)
	Z11385	HOUSING	2	XXXX	-		X	(SUB FOR Z11097)
14	12H312	LOCK WASHER	10				X	3/4"
15	14H863	NUT	2				X	3/4"
16	Z37924	STUD	2				X	(SUB FOR H36568)
17	19H1374	CAP SCREW	AR				X	3/4"X2"
18	Z39677	CAP SCREW	2				X	
19	Z39355	BUSHING	2				X	
20	P46369	FITTING	2				X	
21	15H584	PIPE PLUG	2				X	1/2"
22	H22782	GASKET	2				X	
23	H22789	PIPE PLUG	2				X	
24	H10280	COVER	2				X	
25	15H255	PIPE PLUG	2				X	
26	12H304	LOCK WASHER	8				X	3/8"
27	19H2128	CAP SCREW	8				X	3/8"X3"
28	19H1800	CAP SCREW	16				X	3/8"X1-1/2"
29	Z39560	BUSHING	4				X	
30	Z39562	CAP SCREW	4				X	3/4"-10
31	Z39561	BUSHING	2				X	
..	AZ30974	KIT	2				X	INCL KEYS (4) 1, (4) 2,22-25, (4) 26, (4) 27, (8) 28 (W/ Z11385)

COPYRIGHT©1994 - 2008 DEERE & COMPANY Moline, Illinois All rights reserved

(1H10) FINAL DRIVE HOUSING-SPECIAL EQUIPMENT RICE
CARTER DE COMMANDE FINALE-EQUIPEMENT SPECIAL RIZ
ENDANTRIEBSGEHAEUSE-SONDERAUSRUESTUNG REIS
SCATOLA RIDUZIONE FINALE-EQUIP. SPECIALE PER RISO
CAJA DE MANDO FINAL-EQUIPO ESPECIAL ARROZ
SLUTVAXELHUS-EXTRA UTRUSTNING FOR RIS

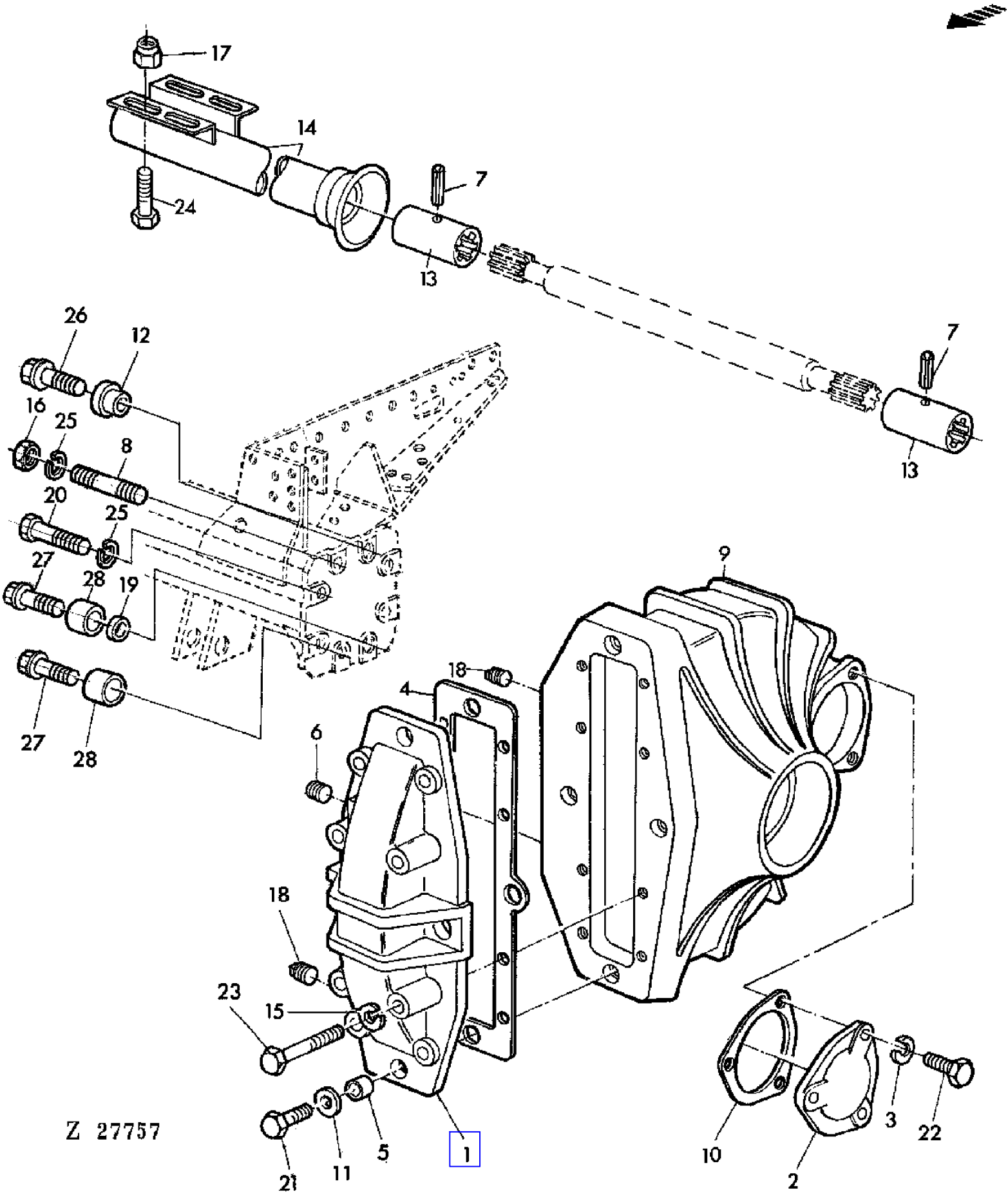

COPYRIGHT©1994 - 2008 DEERE & COMPANY Moline, Illinois All rights reserved

(1H10) FINAL DRIVE HOUSING-SPECIAL EQUIPMENT RICE
CARTER DE COMMANDE FINALE-EQUIPEMENT SPECIAL RIZ
ENDANTRIEBSGEHAEUSE-SONDERAUSRUESTUNG REIS
SCATOLA RIDUZIONE FINALE-EQUIP. SPECIALE PER RISO
CAJA DE MANDO FINAL-EQUIPO ESPECIAL ARROZ
SLUTVAXELHUS-EXTRA UTRUSTNING FOR RIS

KEY	PART NO.	PART NAME	QTY	SERIAL NO.			955	REMARKS
1	H10280	COVER	2				X	
2	Z10941	QUILL	2				X	
3	H20551	LOCK WASHER	6				X	
4	H22782	GASKET	2				X	
5	H22785	BUSHING	8				X	
6	H22789	PIPE PLUG	2				X	
7	34H386	SPRING PIN	4				X	1/4"X2"
8	Z37924	STUD	6				X	(SUB FOR H36568)
9	Z10942	HOUSING	2		-	010731	X	(ORD Z11014 W/ JD9162, Z35175, Z35176)
	Z11014	HOUSING	2	010732	-	030282	X	(ORD Z11362 W/ JD8249, Z40239)
	Z11362	HOUSING	2	030283	-		X	(SUB FOR Z10942, Z11014)
10	Z34380	SHIM	AR				X	0,08MM
	Z34378	SHIM	AR				X	0,13MM
	Z34377	SHIM	AR				X	0,25MM
	Z34376	SHIM	AR				X	0,5MM
11	E12817	WASHER	8				X	
12	Z39355	BUSHING	2				X	
13	Z31218	SPACER	4		-	016667	X	
	Z37932	SPLINED COUPLING	4	016668	-		X	
14	AZ19977	GUARD	2				X	(A)
	AZ19978	GUARD	2				X	(B)
15	12H304	LOCK WASHER	16				X	3/8"
16	14H863	NUT	6				X	3/4"
17	14M7167	LOCK NUT	4				X	M10
18	15H255	PIPE PLUG	6				X	
19	Z39561	BUSHING	2				X	
20	19H1374	CAP SCREW	AR				X	3/8"X2"
21	19H1800	CAP SCREW	8				X	3/8"X1-1/2"
22	19H1821	CAP SCREW	6		-	010731	X	7/16"X1-1/4"
	19H1773	CAP SCREW	6	010732	-		X	7/16"X1-1/8"
23	19H2128	CAP SCREW	8				X	3/8"X3"
24	19M7167	CAP SCREW	4				X	M10X25
25	12H312	LOCK WASHER	AR				X	3/4"
26	Z39677	CAP SCREW	2				X	
27	Z39562	CAP SCREW	4				X	
28	Z39560	BUSHING	4				X	

(A) WITH TRACKS
AVEC CHENILLES
BEI RAUPEN
CON CINGOLI
CON TREN DE ORUGAS
VID BAND

(B) WITH TIRES
AVEC PNEUS
BEI REIFEN
CON PNEUMATICI
CON NEUMATICOS
VID DACK

COPYRIGHT©1994 - 2008 DEERE & COMPANY Moline, Illinois All rights reserved

(1H12) FINAL DRIVE-SPECIAL EQUIPMENT RICE
COMMANDE FINALE-EQUIPEMENT SPECIAL RIZ
ENDANTRIEB-SONDERAUSRUESTUNG REIS
RIDUZIONE FINALE-EQUIP. SPECIALE PER RISO
MANDO FINAL-EQUIPO ESPECIAL ARROZ
SLUTVAXEL-EXTRA UTRUSTNING FOR RIS

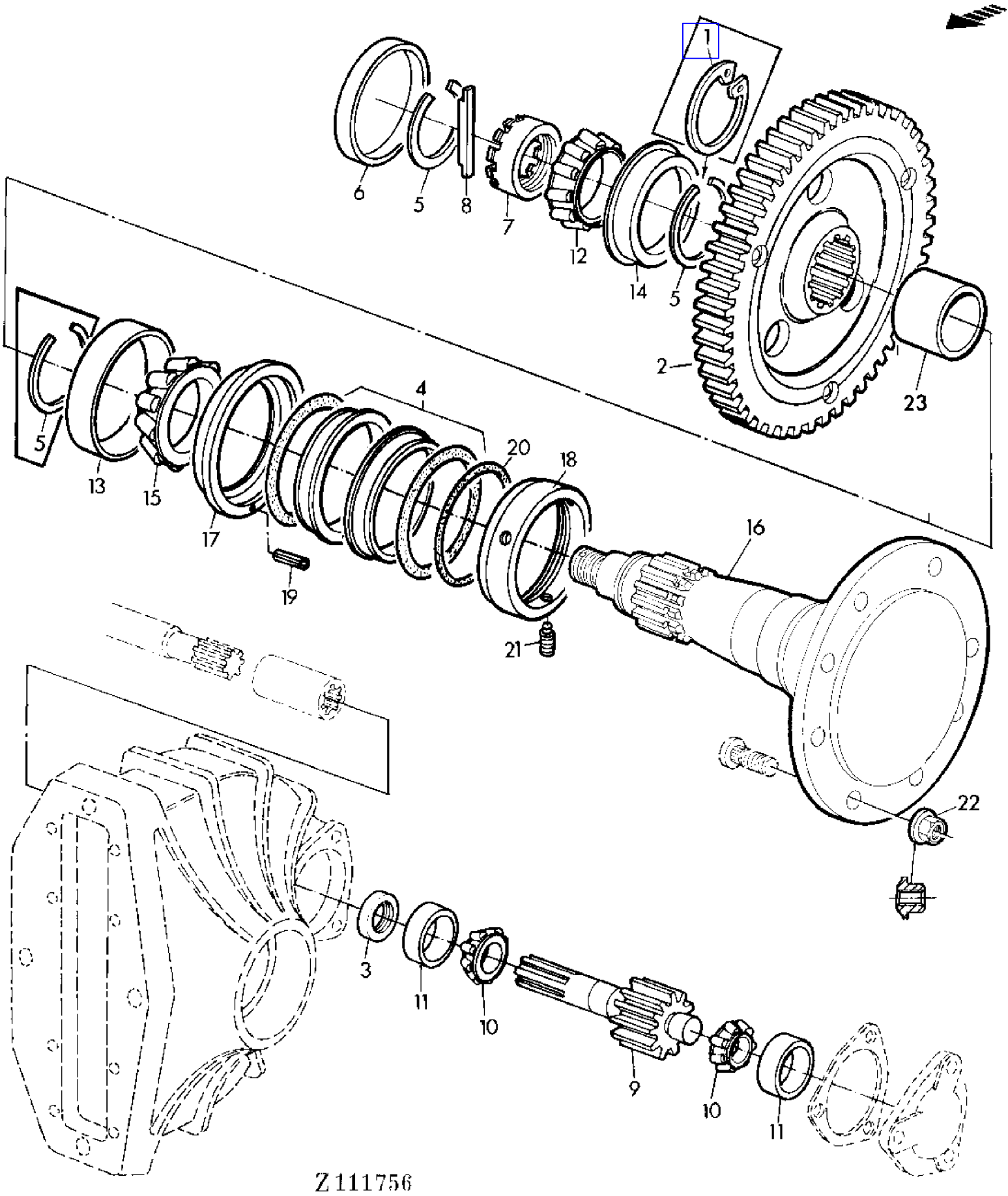

COPYRIGHT©1994 - 2008 DEERE & COMPANY Moline, Illinois All rights reserved

(1H12) FINAL DRIVE-SPECIAL EQUIPMENT RICE
COMMANDE FINALE-EQUIPEMENT SPECIAL RIZ
ENDANTRIEB-SONDERAUSRUESTUNG REIS
RIDUZIONE FINALE-EQUIP. SPECIALE PER RISO
MANDO FINAL-EQUIPO ESPECIAL ARROZ
SLUTVAXEL-EXTRA UTRUSTNING FOR RIS

KEY	PART NO.	PART NAME	QTY	SERIAL NO.			955	REMARKS
1	Z38036	SNAP RING	2	010732	-	030282	X	(SUB FOR Z35175)
2	AH66305	GEAR	2		-	010731	X	
	Z11013	GEAR	2	010732	-		X	
3	AH81622	SEAL	2				X	
4	AZ19602	SEAL	AR				X	ASSY
5	H22784	SNAP RING	6				X	
6	H22787	BEARING CAP	2		-	010731	X	
	Z35176	CAP	2	010732	-	030282	X	
	Z40239	CAP	2	030283	-		X	
7	H31263	NUT	2				X	
8	H31264	SHAFT KEY	2				X	
9	H65260	PINION	2		-	016667	X	
	Z11315	PINION	2	016668	-		X	(SUB FOR Z11171, Z11271)
10	JD7222	BEARING CONE	4				X	
11	JD7266	BEARING CUP	4				X	
12	JD8152	BEARING CONE	2				X	
13	JD8248	BEARING CUP	2				X	
14	JD8249	BEARING CUP	2		-	010731	X	
	JD9162	BEARING CUP	2	010732	-	030282	X	
	JD8249	BEARING CUP	2	030283	-		X	
15	JD8923	BEARING CONE	2				X	
16	Z11404	AXLE	2		-	XXXX	X	(ORD Z11791 W/ Z45464) (SUB FOR Z10762)
	Z11791	AXLE	2	XXXX	-		X	(SUB FOR Z11404, Z11622)
17	Z11535	RING	2				X	(SUB FOR Z10763, Z11403)
18	Z10764	RING	2				X	
19	34M7010	SPRING PIN	2				X	3X18MM
20	Z31005	O-RING	2				X	
21	22M7077	SET SCREW	6				X	M8X20
22	14M7237	NUT	16				X	M18
23	Z45464	SPACER	2	XXXX	-		X	(FOR Z11622)

COPYRIGHT©1994 - 2008 DEERE & COMPANY Moline, Illinois All rights reserved

(PC4146) 955 Combine

(4A17) FINGER GRATE
PEIGNE
FINGERRECHEN
RASTRELLO A DITO
RASTRILLO DE PUAS
TRADRAFSA

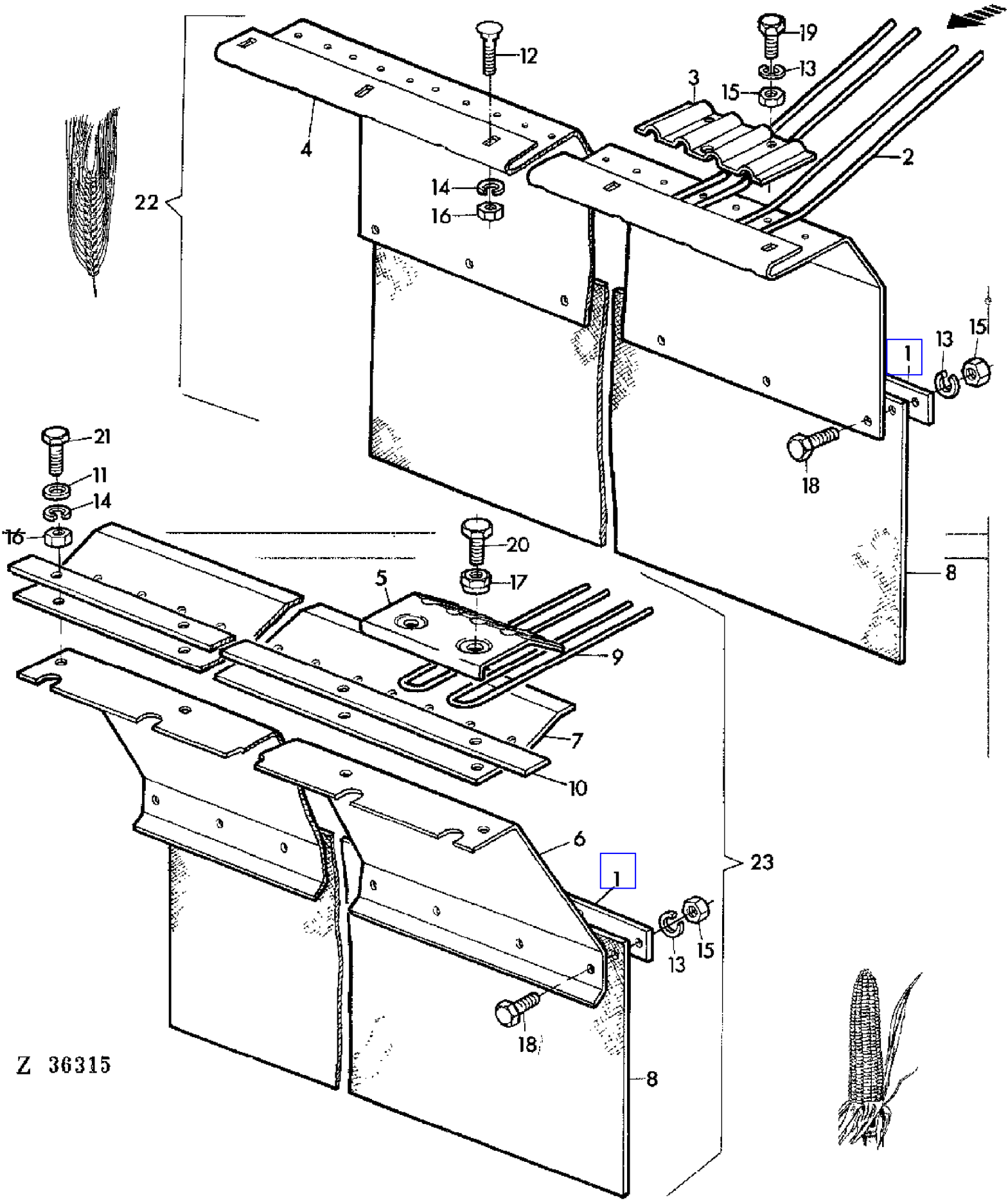

COPYRIGHT©1994 - 2008 DEERE & COMPANY Moline, Illinois All rights reserved

(4A17) FINGER GRATE
PEIGNE
FINGERRECHEN
RASTRELLO A DITO
RASTRILLO DE PUAS
TRADRAFSA

KEY	PART NO.	PART NAME	QTY	SERIAL NO.			955	REMARKS
1	Z20058	STRAP	1				X	
2	Z20073	TINE	24				X	
3	Z20074	RETAINER	12				X	
4	Z20075	SHEET	1		-	003150	X	
	Z35185	SHEET	1	003151	-		X	
5	Z29341	RETAINER	8				X	
6	Z29343	SHEET	1		-	003150	X	
	Z35181	SHEET	1	003151	-		X	
7	Z29408	SHEET	1				X	
8	Z35497	LIMIT CURTAIN	1				X	(SUB FOR Z30189)
9	Z31009	TINE	16				X	
10	Z31012	REINFORCEMENT	1		-	003150	X	
11	L19008	WASHER	6				X	
12	03M7017	BOLT	6				X	M10X25
13	12M7012	LOCK WASHER	31				X	6MM
14	12M7013	LOCK WASHER	12				X	10MM
15	14M7027	NUT	31				X	M6
16	14M7140	NUT	12				X	M10
17	14M7166	LOCK NUT	16				X	M8
18	19M6614	CAP SCREW	7				X	M6X12
19	19M7159	CAP SCREW	24				X	M6X15
20	19M7163	CAP SCREW	16				X	M8X25
21	19M7169	CAP SCREW	6				X	M10X35
22	.....	FINGER GRATE	1				X	(A)
23	.....	FINGER GRATE	1				X	(A)

```
(A) 22 CAN BEI COMPLETELY REPLACED BY INDIVIDUAL PARTS 23
    22 PEUT ETRE COMPLETEMENT REMPLACE PAR LES PIECES INDIVIDUELLES 23
    22 KANN KOMPLETT DURCH DIE EINZELTEILE VON 23 ERSETZT WERDEN
    22 PUO ESSERE SOSTITUITO TOTALMENTE DALLE PARTI SINGOLE SOTTO 23
    22 PUEDE CAMBIARSE COMPLETAMENTE POR LOS COMPONENTES DE LA CLAVE 23
    22 KAN HELT BYTAS UT MOT DELAR AV 23
```

COPYRIGHT©1994 - 2008 DEERE & COMPANY Moline, Illinois All rights reserved

(2D18) FITTINGS AND OIL RESERVOIR FOR HYDROSTATIC REEL DRIVE
RACCORDS ET RESERVOIR HUILE POUR ENTRAIN.HYDROST.RABATTEUR
ARMATUREN UND OELTANK FUER HYDROST.HASPELANTRIEB
RACCORDI E SERBATOI OLIO PER COMANDO IDROSTATICO DELL'ASPO
RACORES Y DEPOSITO DE ACEITE PARA MANDO HIDROST.MOLINETE
ANSLUTNINGAR OCH OLJETANK FOR HYDROSTATISK HASPELDRIVNING

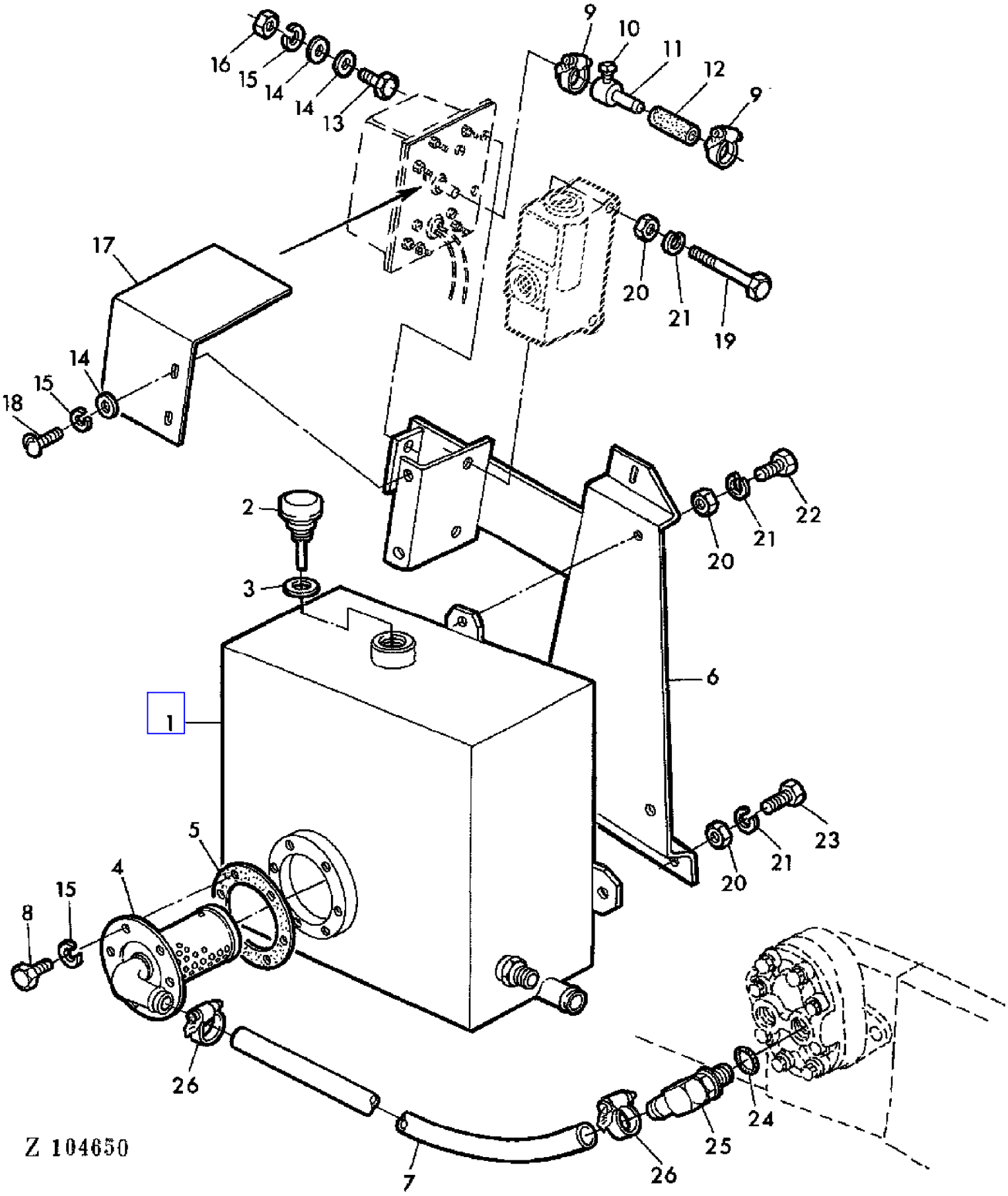

COPYRIGHT©1994 - 2008 DEERE & COMPANY Moline, Illinois All rights reserved

(2D18) FITTINGS AND OIL RESERVOIR FOR HYDROSTATIC REEL DRIVE
RACCORDS ET RESERVOIR HUILE POUR ENTRAIN.HYDROST.RABATTEUR
ARMATUREN UND OELTANK FUER HYDROST.HASPELANTRIEB
RACCORDI E SERBATOI OLIO PER COMANDO IDROSTATICO DELL'ASPO
RACORES Y DEPOSITO DE ACEITE PARA MANDO HIDROST.MOLINETE
ANSLUTNINGAR OCH OLJETANK FOR HYDROSTATISK HASPELDRIVNING

KEY	PART NO.	PART NAME	QTY	SERIAL NO.	955	REMARKS
1	AZ15811	HYDRAULIC RESERVOIR	1		X	
2	AL17552	BREATHER	1		X	
3	51M4247	RING	1		X	
4	AZ25027	FILTER	1		X	
5	Z26828	GASKET	1		X	
6	AZ30096	SUPPORT	1		X	
7	Z51546	HYDRAULIC HOSE	1		X	(SUB FOR Z36049)
8	19M7077	CAP SCREW	AR		X	M6X20
9	AR21836	CLAMP	2		X	
10	22H906	SET SCREW	1		X	1/4"X1/2"
11	H97941	ADAPTER	1		X	
12	H97942	HOSE	1		X	
13	19M7286	CAP SCREW	AR		X	M6X25
14	24M7088	WASHER	AR		X	6,6MM
15	12M7012	LOCK WASHER	AR		X	6MM
16	14M7027	NUT	AR		X	M6
17	Z41710	GUARD	1		X	
18	21M7031	SCREW	AR		X	M6X15
19	19M7270	CAP SCREW	AR		X	M8X65
20	14M7029	NUT	AR		X	M8
21	12M7008	LOCK WASHER	AR		X	8MM
22	19M7139	CAP SCREW	AR		X	M8X20
23	19M7163	CAP SCREW	AR		X	M8X25
24	U12547	O-RING	1		X	
25	AR68999	ELBOW FITTING	1		X	
26	Z26822	CLAMP	2		X	

COPYRIGHT©1994 - 2008 DEERE & COMPANY Moline, Illinois All rights reserved

(4B08) FLAT BELT GUIDE
GUIDE COURROIE PLATE
FLACHRIEMENFUEHRUNG
GUIDA-CINGHIONE
GUIA DE CORREA PLANA
FLATREMSTYRNING

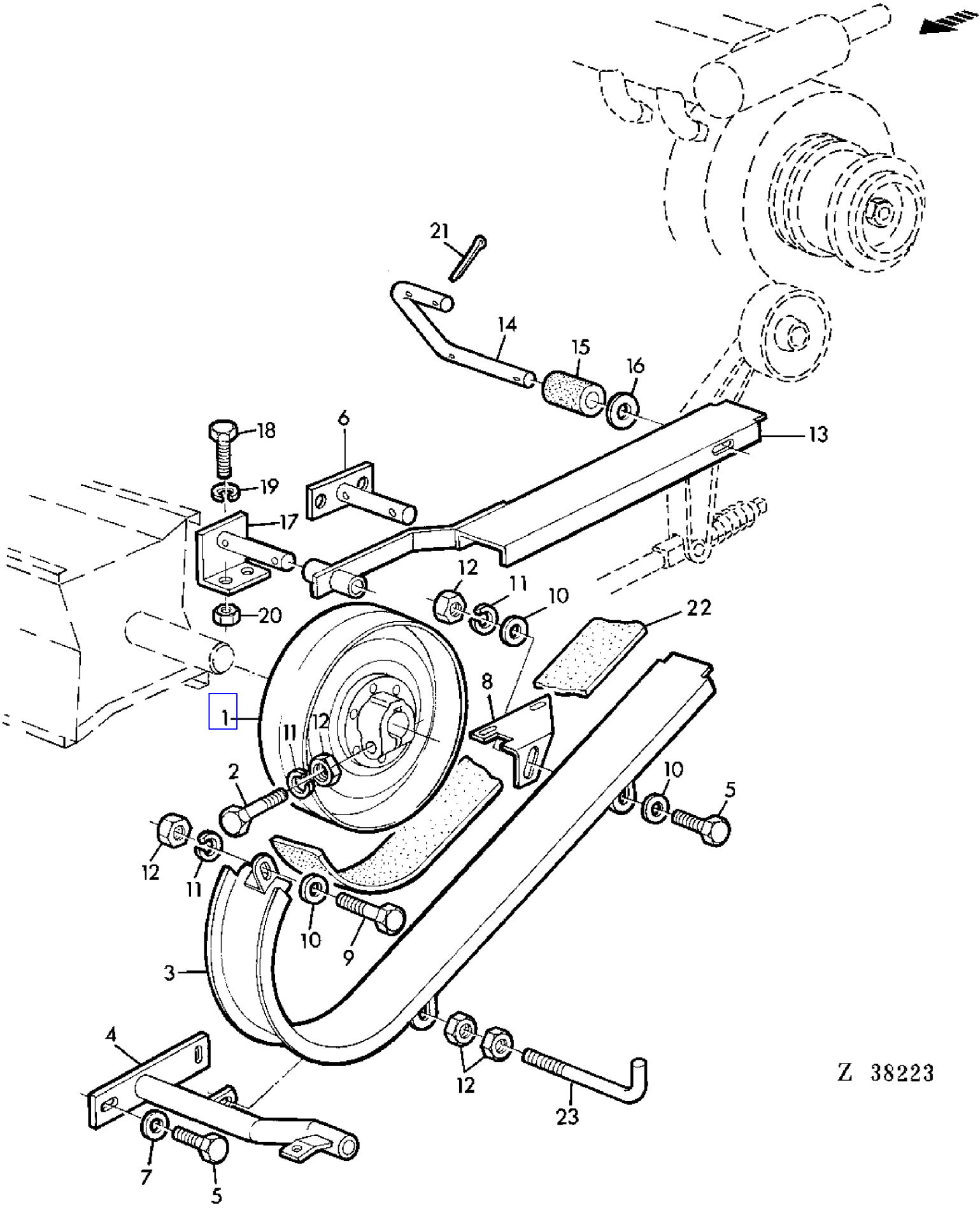

COPYRIGHT©1994 - 2008 DEERE & COMPANY Moline, Illinois All rights reserved

(4B08) FLAT BELT GUIDE
GUIDE COURROIE PLATE
FLACHRIEMENFUEHRUNG
GUIDA-CINGHIONE
GUIA DE CORREA PLANA
FLATREMSTYRNING

KEY	PART NO.	PART NAME	QTY	SERIAL NO.	955	REMARKS
1	AZ33570	PULLEY	1		X	(SUB FOR AZ19443)
2	19M7327	CAP SCREW	2		X	M10X65
3	AZ21431	GUIDE	1		X	
4	AZ20855	BRACKET	1		X	
5	19M7168	CAP SCREW	3		X	M10X30
6	AZ21127	HOLDER	1		X	(A)
7	24M7036	WASHER	2		X	9MM
8	Z32548	HOLDER	1		X	
9	19M7167	CAP SCREW	2		X	M10X25
10	24M7040	WASHER	3		X	11MM
11	12M7013	LOCK WASHER	3		X	10MM
12	14M7140	NUT	5		X	M10
13	AZ19722	BRACKET	1		X	
14	Z31057	HOLDER	1		X	
15	Z31640	BUSHING	1		X	
16	24M7028	WASHER	1		X	10,5MM
17	AZ19719	HOLDER	1		X	
18	19M7139	CAP SCREW	4		X	M8X20
19	12M7008	LOCK WASHER	5		X	8MM
20	14M7029	NUT	5		X	M8
21	11M7012	COTTER PIN	2		X	3X18MM
22	Z21403	BELT	1		X	
23	Z32076	HOOK BOLT	1		X	

(A) FOR TOP-SACKER ONLY
UNIQUEMENT ENSACHEUR SUPERIEUR
NUR FUER TOP-SACKER
SOLTANTO PER INSACCATORE SUPERIORE
SOLAMENTE PARA ENSACADOR SUPERIOR
ENDAST FOR OVRE SACKNINGSPLATTFORM

COPYRIGHT©1994 - 2008 DEERE & COMPANY Moline, Illinois All rights reserved

(3F14) FLOOR PANEL FOR FEEDER CONVEYOR
FOND DE CONVOYEUR
BODENBLECH FUER SCHRAEGFOERDERER
FONDO PER CONVOGLIATORE
CHAPA DE FONDO DEL ELEVADOR DE MIES
BOTTENPLAT FOER INMATNINGSKANAL

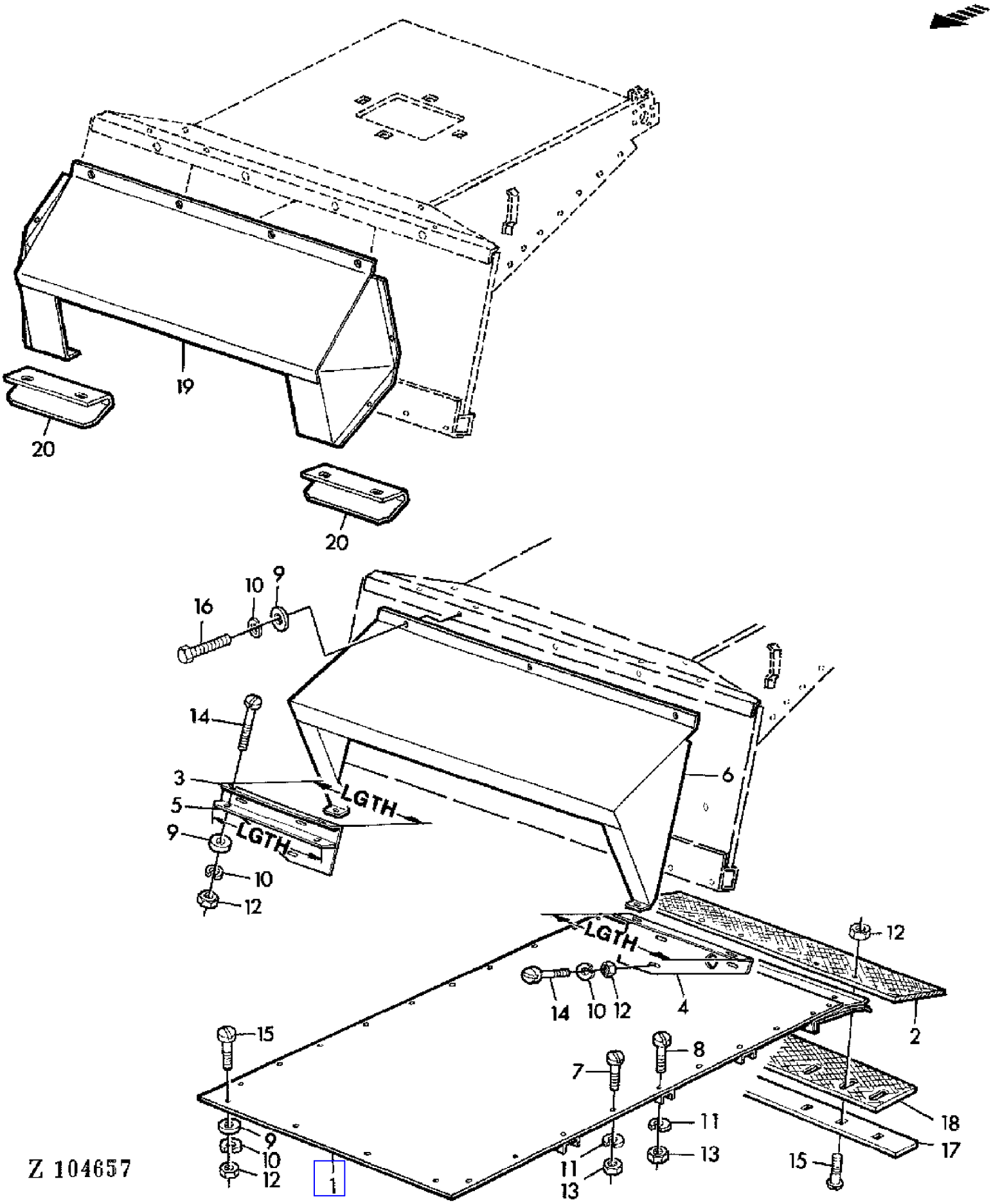

COPYRIGHT©1994 - 2008 DEERE & COMPANY Moline, Illinois All rights reserved

(3F14) FLOOR PANEL FOR FEEDER CONVEYOR
FOND DE CONVOYEUR
BODENBLECH FUER SCHRAEGFOERDERER
FONDO PER CONVOGLIATORE
CHAPA DE FONDO DEL ELEVADOR DE MIES
BOTTENPLAT FOER INMATNINGSKANAL

KEY	PART NO.	PART NAME	QTY	SERIAL NO.			955	REMARKS
1	AZ18674	SHEET	1		-	010731	X	
	AZ32842	PLOW BOTTOM	1		-	010731	X	(A) (SUB FOR AZ19471)
	AZ24757	SHEET	1	010732	-	026722	X	
	AZ24758	SHEET	1	010732	-	025572	X	(A)
	AZ32842	PLOW BOTTOM	1	025573	-		X	(A) (SUB FOR AZ19471)
	AZ18674	SHEET	1	026723	-		X	
2	Z32144	GASKET	1				X	
	Z51548	WEATHERSTRIP	1	XXXX	-		X	(A)
3	Z36971	BRACKET	1				X	AR, LGTH = 366 MM
	Z30139	BRACKET	1				X	AR, LGTH = 406 MM (ORD Z51954)
	Z42902	STRIPPER	1				X	(B) (ORD Z51990)
4	Z36970	STRIPPER	1				X	AR, LGTH = 366 MM
	Z30138	BRACKET	1				X	AR, LGTH = 406 MM (ORD Z51953)
	Z42903	STRIPPER	1				X	(B) (ORD Z51989)
5	Z36963	EXTENSION	2				X	AR, LGTH = 366 MM
	Z30527	BRACKET	2				X	AR, LGTH = 406 MM
6	AZ21484	SHIELD	1				X	AR (ORD AZ33608, Z30138, Z30139, (2) Z30527)
7	21M7162	SCREW	AR				X	M10X20
8	21M7093	SCREW	AR				X	M10X30
9	24M7036	WASHER	AR				X	M10X30
10	12M7008	LOCK WASHER	AR				X	8MM
11	12M7013	LOCK WASHER	AR				X	10MM
12	14M7029	NUT	AR				X	M8
13	14M7140	NUT	AR				X	M10
14	21M7160	SCREW	AR				X	M8X18
15	21M7089	SCREW	AR				X	M8X20
16	19M7284	CAP SCREW	4				X	M8X18
17	Z39209	REINFORCEMENT	1		-	025572	X	(SUB FOR Z38636)
18	Z38633	BOOT	1		-	025572	X	
19	AZ33608	SHIELD	1				X	(ORD AZ38085) (SUB FOR AZ21484 APPL)
20	Z43556	STRIPPER	2				X	

(A) FOR LONG FEEDER CONVEYOR
POUR CONVOYEUR D'ALIMENTATION LONG
FUER SCHRAEGFOERDERER LANG
PER CONVOGLIATORE LUNGO
PARA ELEVADOR DE MIES LARGO
FOR LANG INMATNINGSELEVATOR

(B) FOR RICE ATTACHMENT
POUR EQUIPEMENT RIZ
FUER REISAUSRUESTUNG
PER ATTREZZATURA DA RISO
PARA EQUIPO DE ARROZ
FOR RISTILLBEHOR

COPYRIGHT©1994 - 2008 DEERE & COMPANY Moline, Illinois All rights reserved

(1B12) FLYWHEEL/FLYWHEEL COVER
VOLANT/CARTER
SCHWUNGRAD/SCHWUNGRADGEHAEUSE
VOLANO/CARTER VOLANO
VOLANTE/CARCASA
SVANGHJUL OCH KAPA

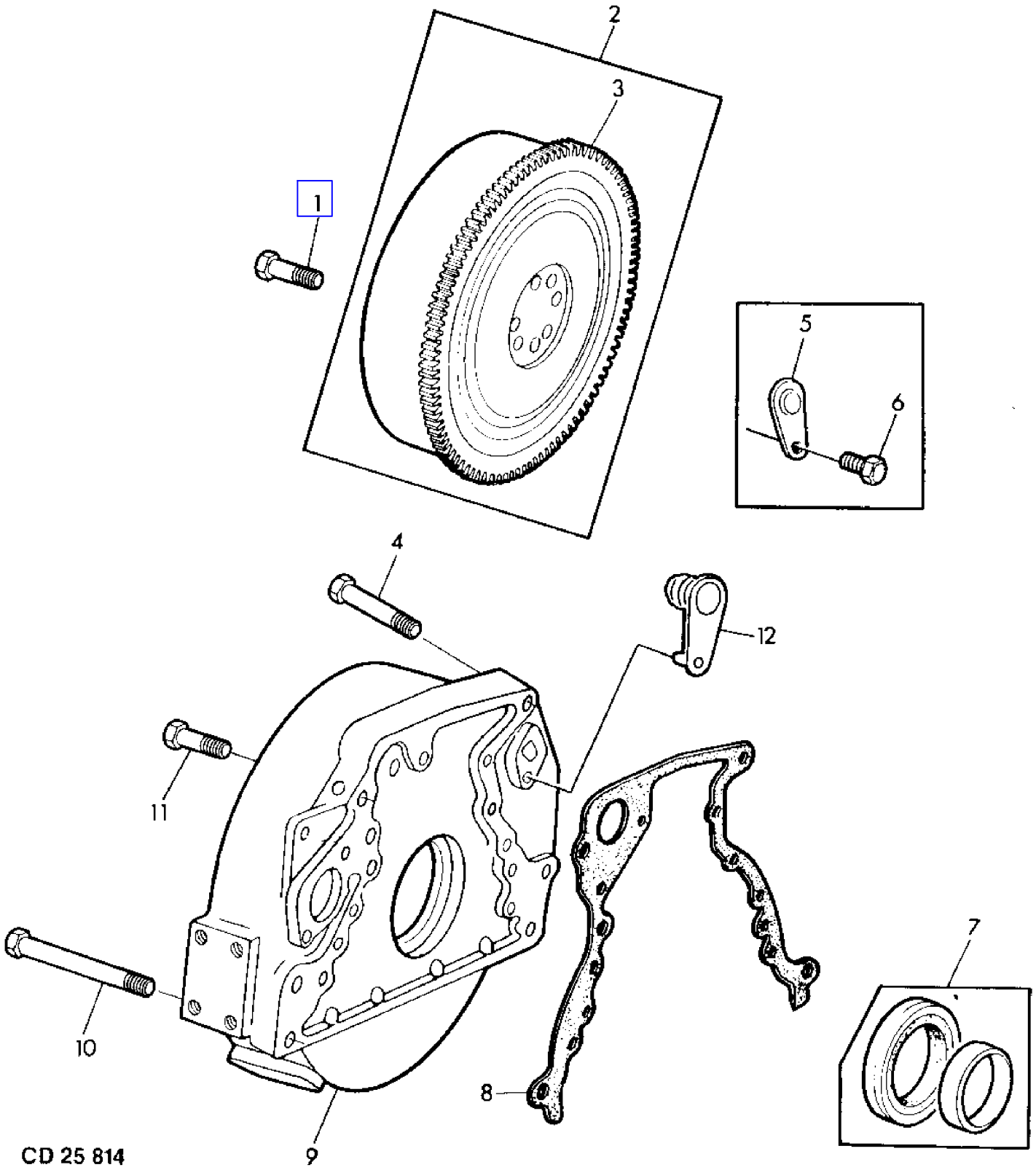

COPYRIGHT©1994 - 2008 DEERE & COMPANY Moline, Illinois All rights reserved

(1B12) FLYWHEEL/FLYWHEEL COVER
VOLANT/CARTER
SCHWUNGRAD/SCHWUNGRADGEHAEUSE
VOLANO/CARTER VOLANO
VOLANTE/CARCASA
SVANGHJUL OCH KAPA

KEY	PART NO.	PART NAME	QTY	ENGINE SERIAL NO.			955	REMARKS
1	T20139	CAP SCREW	4		-	333624	X	(ORD (4) 19H2993)
	19H2993	CAP SCREW	4	333625	-		X	1/2"X1-1/2"
2	AT18132	FLYWHEEL	1				X	
3	T20088	GEAR	1				X	Z = 142
4	19H1439	CAP SCREW	2				X	UP, 5/8"X3"
5	T20089	COVER	1				X	(ORD R83555)
6	19H2351	CAP SCREW	1				X	1/2"X1/2" (FOR T20089)
7	RE11036	SEAL	1				X	(SUB FOR AR92893, AT22965)
8	R70483	GASKET	1				X	(SUB FOR R49516)
9	R64100	HOUSING	1				X	(SUB FOR T25114)
10	19H1923	CAP SCREW	2				X	LOW, 5/8"X5-1/2"
11	19H2545	CAP SCREW	8				X	3/8"X1-3/8" (SUB FOR 12H304, 19H1800)
12	R83555	PLUG	AR				X	

COPYRIGHT©1994 - 2008 DEERE & COMPANY Moline, Illinois All rights reserved

(3D14) FRAME AND MOUNTING PARTS-AIR CONDITIONED CAB
BATI ET PIECES DE MONTAGE-CABINE CLIMATISEE
RAHMEN UND ANBAUTEILE-KABINE MIT KLIMAANLAGE
TELAIO E PARTI DI MONTAGGIO-CABINA CONDIZIONATA
BASTIDOR Y PIEZAS DE MONTAJE-CABINA CON AIRE ACONDICIONADO
RAM OCH MONTERINGSDETALJER-HYTT MED LUFTKONDITIONERING

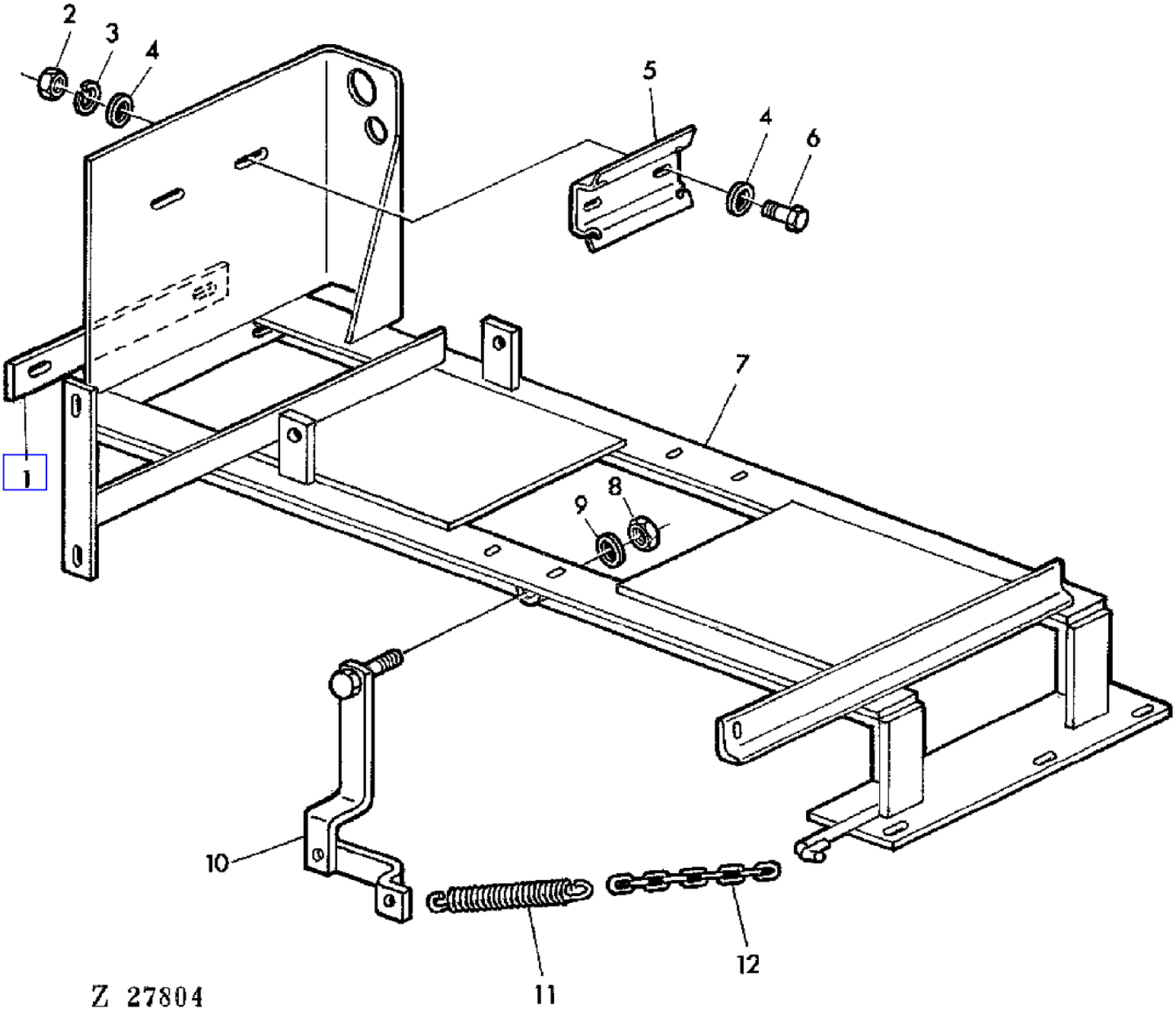

COPYRIGHT©1994 - 2008 DEERE & COMPANY Moline, Illinois All rights reserved

(3D14) FRAME AND MOUNTING PARTS-AIR CONDITIONED CAB
BATI ET PIECES DE MONTAGE-CABINE CLIMATISEE
RAHMEN UND ANBAUTEILE-KABINE MIT KLIMAANLAGE
TELAIO E PARTI DI MONTAGGIO-CABINA CONDIZIONATA
BASTIDOR Y PIEZAS DE MONTAJE-CABINA CON AIRE ACONDICIONADO
RAM OCH MONTERINGSDETALJER-HYTT MED LUFTKONDITIONERING

KEY	PART NO.	PART NAME	QTY	SERIAL NO.	955	REMARKS
1	CA22350	STRAP	1		X	
2	14M7029	NUT	AR		X	M8
3	12M7008	LOCK WASHER	AR		X	8MM
4	24M7036	WASHER	AR		X	9MM
5	H87092	SUPPORT	1		X	
6	19M7139	CAP SCREW	AR		X	M8X20
7	DA22347	FRAME	1		X	
8	14M7167	LOCK NUT	AR		X	M10
9	24M7040	WASHER	AR		X	11MM
10	DA22365	PIVOT	1		X	
11	L19219	SPRING	1		X	
12	CA22540	LINK CHAIN	1		X	

COPYRIGHT©1994 - 2008 DEERE & COMPANY Moline, Illinois All rights reserved

(PC4146) 955 Combine

(1H15) FRONT AXLE
ESSIEU AVANT
VORDERACHSE
ASSALE ANTERIORE
EJE DELANTERO
FRAMAXEL

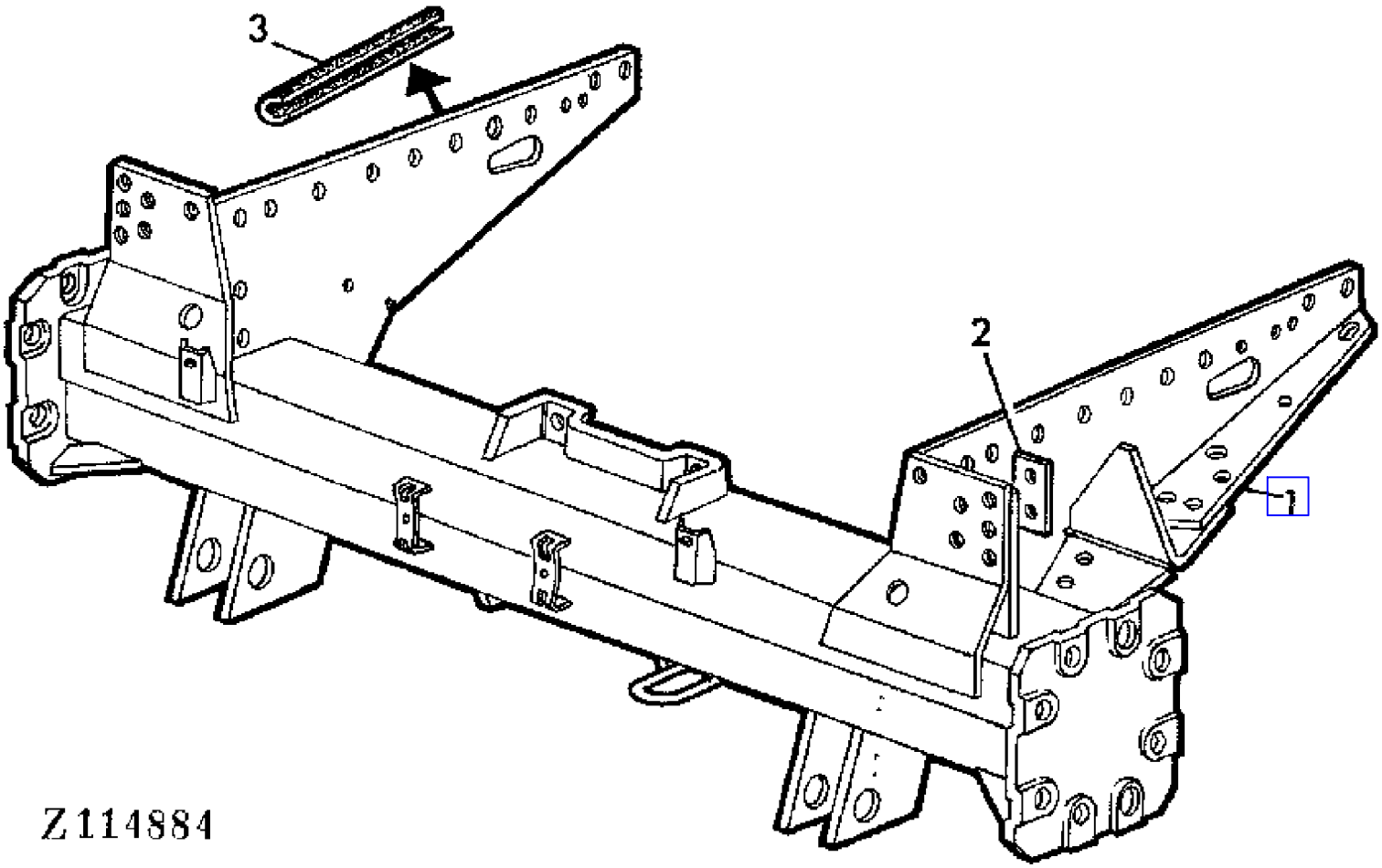

COPYRIGHT©1994 - 2008 DEERE & COMPANY Moline, Illinois All rights reserved

(PC4146) 955 Combine

(1H15) FRONT AXLE
ESSIEU AVANT
VORDERACHSE
ASSALE ANTERIORE
EJE DELANTERO
FRAMAXEL

KEY	PART NO.	PART NAME	QTY	SERIAL NO.			955	REMARKS
1	AZ30457	FRONT AXLE	1		-	026952	X	(SUB FOR AZ23897)
	AZ28093	FRONT AXLE	1	026953	-		X	
2	Z32606	STRAP	1				X	
3	Z37304	GUARD	AR				X	

COPYRIGHT©1994 - 2008 DEERE & COMPANY Moline, Illinois All rights reserved

(3B22) FRONT FRAME AND ROOF
CADRE AVANT ET TOIT
FRONTRAHMEN UND DACH
TELAIO ANTERIORE E TETTO
BASTIDOR DELANTERO Y TECHO
FRAMSTYCKE OCH TAK

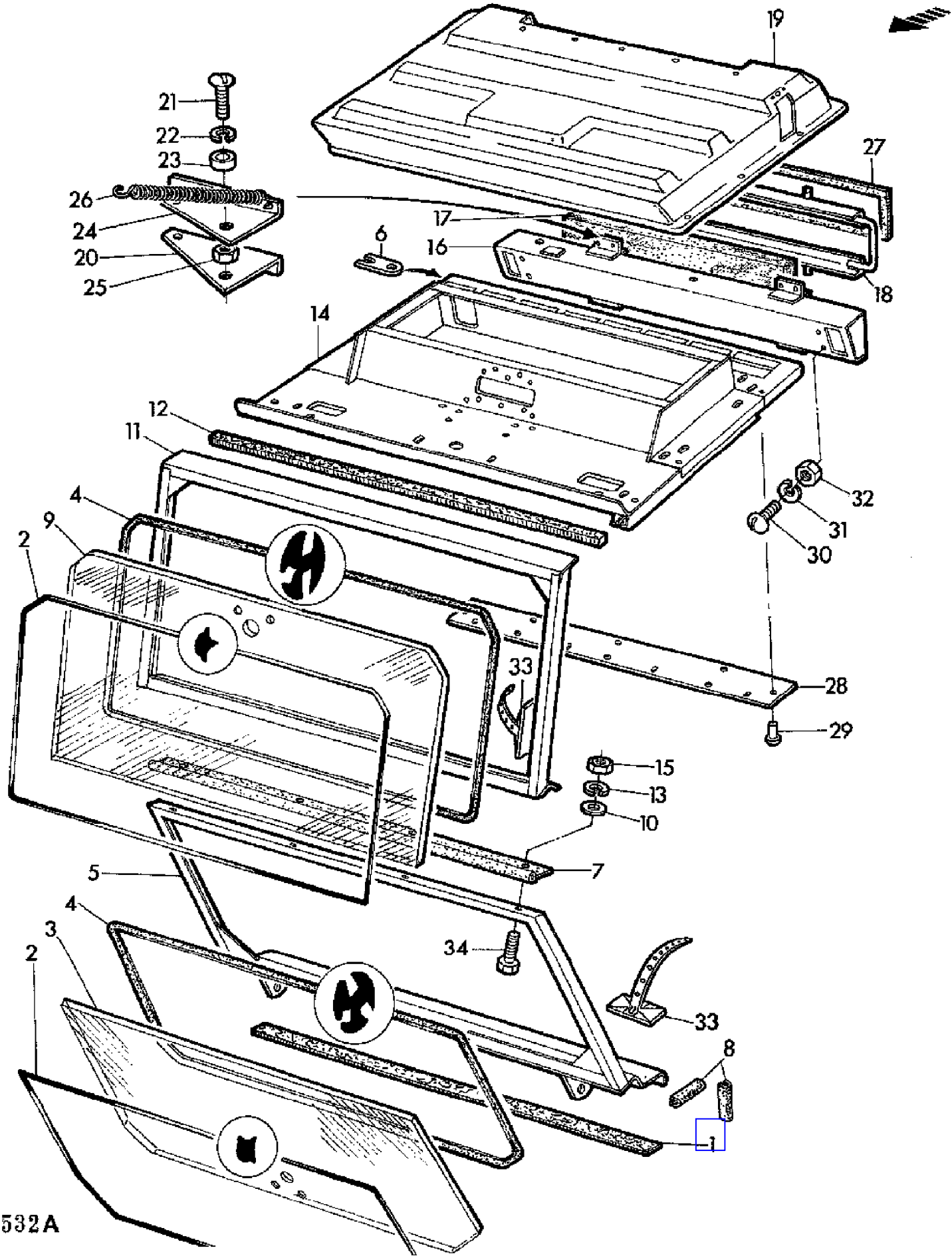

COPYRIGHT©1994 - 2008 DEERE & COMPANY Moline, Illinois All rights reserved

(3B22) FRONT FRAME AND ROOF
CADRE AVANT ET TOIT
FRONTRAHMEN UND DACH
TELAIO ANTERIORE E TETTO
BASTIDOR DELANTERO Y TECHO
FRAMSTYCKE OCH TAK

KEY	PART NO.	PART NAME	QTY	SERIAL NO.	955	REMARKS
1	CA19553	WEATHERSTRIP	1		X	LGTH = 1240 MM 20X8MM
2	CA19405	WEATHERSTRIP	1		X	LGTH = 4330 MM
3	CA19410	WINDOWPANE	1		X	
	CA23645	WINDSHIELD	1		X	(A)
4	CA19404	GASKET	1		X	LGTH = 4330 MM
5	DA19320	FRAME	1		X	
6	CA19990	REINFORCEMENT	1		X	
7	CA19556	WEATHERSTRIP	1		X	LGTH = 1295 MM
8	CA19921	GASKET	1		X	
9	CA19403	WINDOWPANE	1		X	
	CA23644	WINDSHIELD	1		X	(A)
10	24M7040	WASHER	4		X	11MM
11	DA19315	FRAME	1		X	
12	CA19608	GATHERING NUMBER	1		X	LGTH = 1295 MM
13	12M7013	LOCK WASHER	4		X	10MM
14	DA19376	FRAME	1		X	
15	14M7140	NUT	4		X	M10
16	DA19532	HOUSING	1		X	
17	AH80920	FILTER	1		X	
18	DA19536	HOLDER	1		X	
19	CA19714	ROOF	1		X	
20	CA19669	SHEET	2		X	
21	21M7087	SCREW	4		X	M6X12
22	12M7012	LOCK WASHER	4		X	6MM
23	CA19537	SPACER	4		X	
24	CA19539	SHEET	2		X	
25	14M7027	NUT	4		X	M6
26	R34000	SPRING	4		X	
27	CA19549	WEATHERSTRIP	1		X	LGTH = 6550 MM 12X6MM
28	CA19764	SHEET	1		X	
29	CA19717	RIVET	8		X	4X9,5MM
30	21M7081	SCREW	4		X	M8X15
31	12M7008	LOCK WASHER	4		X	8MM
32	14M7029	NUT	4		X	M8
33	Z36647	CLAMP	7		X	
34	19M7167	CAP SCREW	4		X	M10X25

(A) TINTED GLASS
VERRE TEINTE
GETOENTES GLAS
CRISTALLO TINTEGGIATO
CRISTAL TINTURADO
FARGAD RUTOR

COPYRIGHT©1994 - 2008 DEERE & COMPANY Moline, Illinois All rights reserved

(1H16) FRONT WHEELS
ROUWES AVANT
VORDERRAEDER
RUOTE ANTERIORI
RUEDAS DELANTERAS
FRAMHJUL

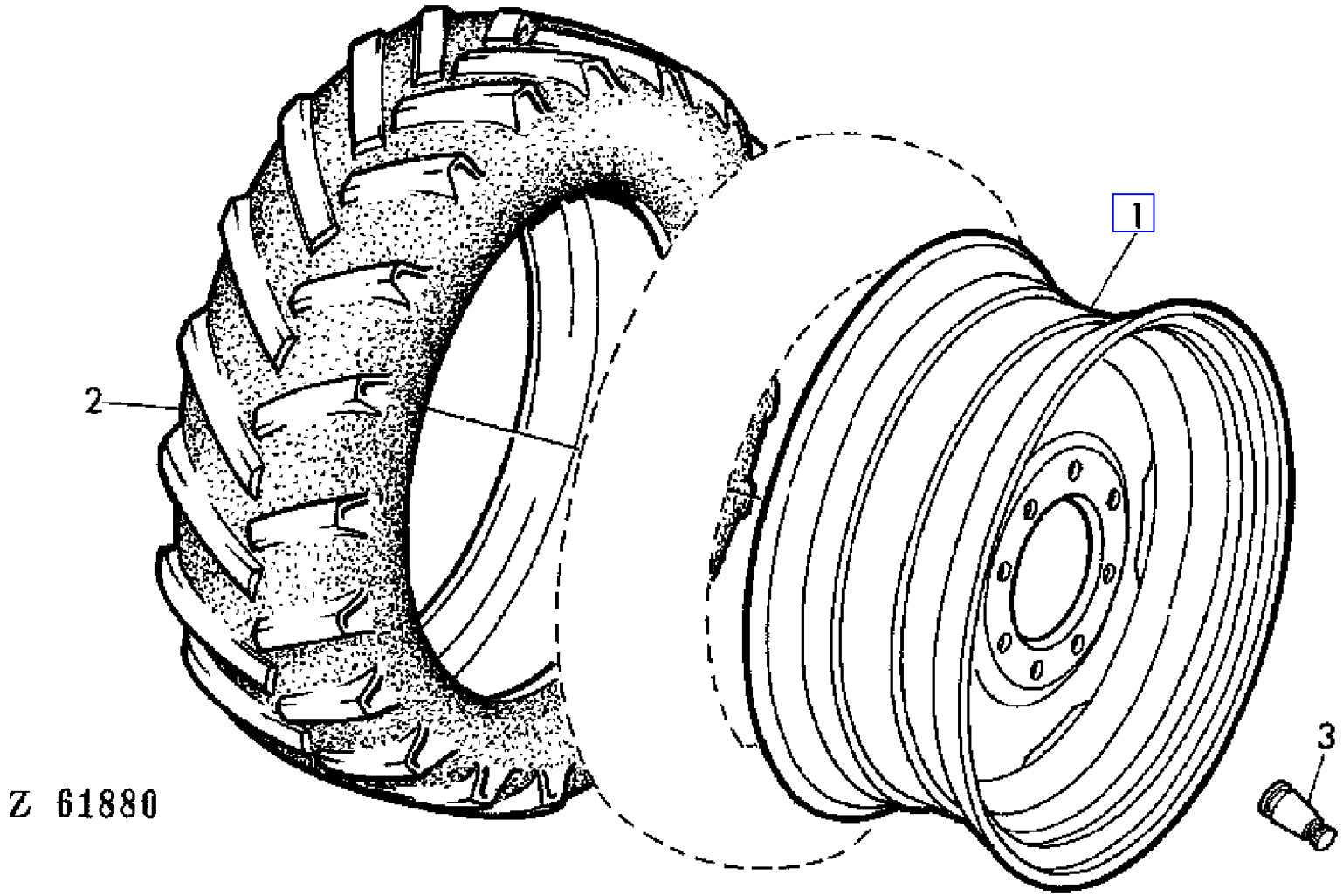

COPYRIGHT©1994 - 2008 DEERE & COMPANY Moline, Illinois All rights reserved

(1H16) FRONT WHEELS
ROUWES AVANT
VORDERRAEDER
RUOTE ANTERIORI
RUEDAS DELANTERAS
FRAMHJUL

KEY	PART NO.	PART NAME	QTY	SERIAL NO.	955	REMARKS
1	AZ34179	RIM	2		X	DW 14X30 (SUB FOR AZ23130)
	AZ22936	RIM	2		X	DW 16X26B
	AZ34180	RIM	2		X	DW 20X26 (SUB FOR AZ22937)
	AZ34181	RIM	1		X	DW 25X26 (SUB FOR AZ22935, AZ27449)
2	.....	TIRE	2		X	18,4/15X26 8PR
	.....	TIRE	2		X	18,4/15X30 AS 8PR
	.....	TIRE	2		X	18,4/15X30 AS 10PR
	.....	TIRE	2		X	23,1/18X26 10PR
	.....	TIRE	2		X	(A) 23,1/18X26 10PR,
	.....	TIRE	2		X	(A) 28,1-26 10PR,
3	AZ16587	TIRE VALVE STEM	AR		X	

(A) FOR RICE ATTACHMENT
POUR EQUIPEMENT RIZ
FUER REISAUSRUESTUNG
PER ATTREZZATURA DA RISO
PARA EQUIPO DE ARROZ
FOR RISTILLBEHOR

COPYRIGHT©1994 - 2008 DEERE & COMPANY Moline, Illinois All rights reserved

(1C24) FUEL FILTER
FILTRE A COMBUSTIBLE
KRAFTSTOFF-FILTER
FILTRO COMBUSTIBILE
FILTRO DE COMBUSTIBLE
BRANSLEFILTER

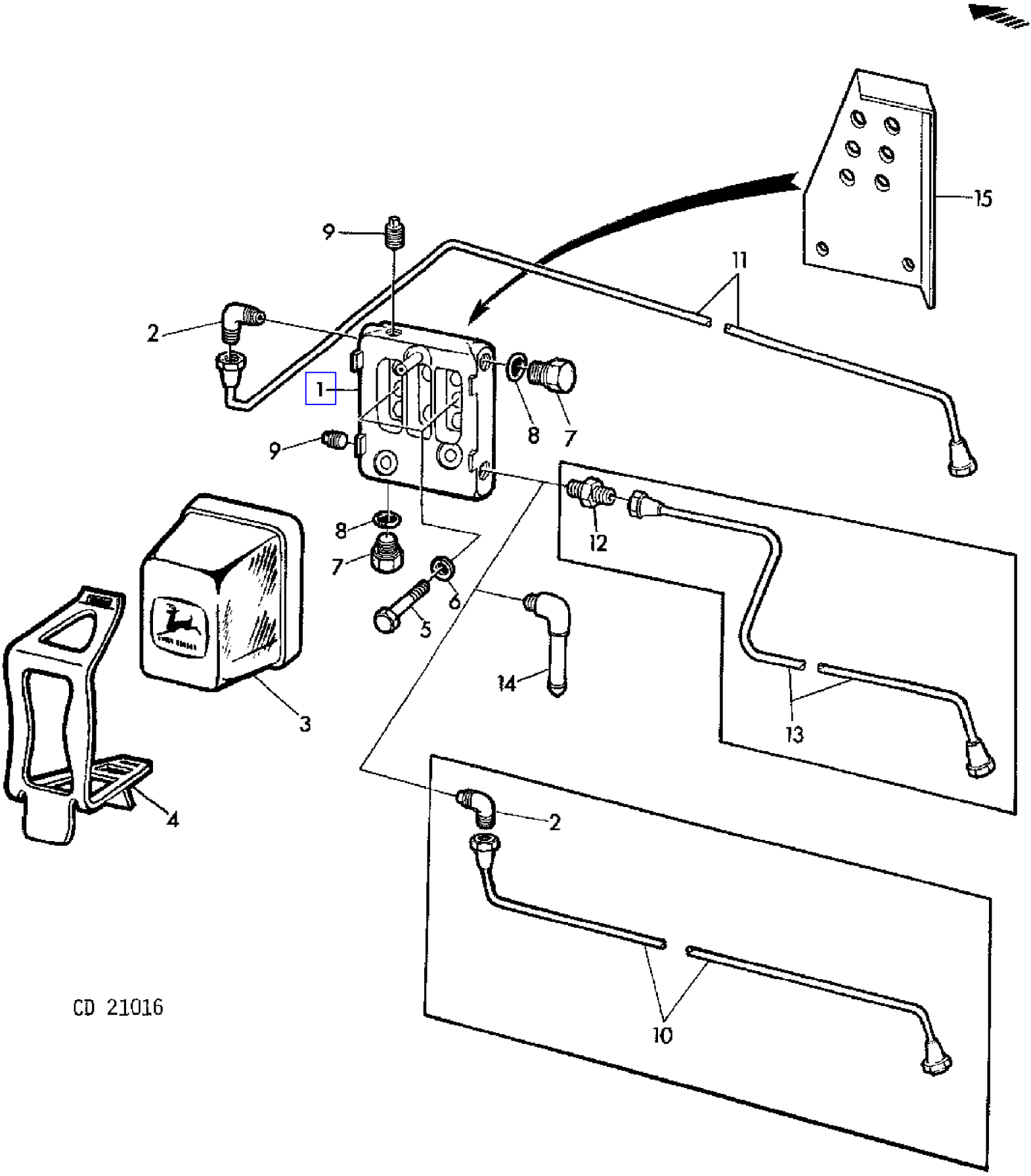

COPYRIGHT©1994 - 2008 DEERE & COMPANY Moline, Illinois All rights reserved

(PC4146) 955 Combine

(1C24) FUEL FILTER
FILTRE A COMBUSTIBLE
KRAFTSTOFF-FILTER
FILTRO COMBUSTIBILE
FILTRO DE COMBUSTIBLE
BRANSLEFILTER

KEY	PART NO.	PART NAME	QTY	ENGINE SERIAL NO.			955	REMARKS
1	AR50040	HOUSING	1				X	(ORD RE28535, 15H558)
	RE28535	HOUSING	AR				X	
2	R82131	ELBOW FITTING	2		-	324804	X	(SUB FOR T30738)
	R82131	ELBOW FITTING	1	324805	-		X	(SUB FOR T30738)
3	AR50041	FUEL FILTER	1				X	
4	R66821	CLAMP	1				X	(SUB FOR R57258)
5	19H1731	CAP SCREW	2				X	3/8"X1"
6	24H1303	WASHER	2				X	13/32"X11/16"X.060"
7	R48071	DRAIN PLUG	2				X	
8	R26287	O-RING	2				X	
9	15H558	PIPE PLUG	1				X	1/8"
10	AR63953	FUEL LINE	1		-	324804	X	(ORD AR84732 W/ R27346)
11	RE26982	FUEL LINE	1				X	(SUB FOR AR63954)
12	R27346	FITTING	1	324805	-	377809	X	
13	AR84732	FUEL LINE	1	324805	-	377809	X	
14	R61356	ELBOW FITTING	1	377810	-		X	
15	CD16159	BRACKET	1	480396	-		X	(SUB FOR R75699)

COPYRIGHT©1994 - 2008 DEERE & COMPANY Moline, Illinois All rights reserved

(1D03) FUEL INJECTION NOZZLE "STANADYNE"
INJECTEUR "STANADYNE"
KRAFTSTOFF-EINSPRITZDUESE "STANADYNE"
INIETTORE "STANADYNE"
INYECTOR "STANADYNE"
BRANSLEINSPRUTARE "STANADYNE"

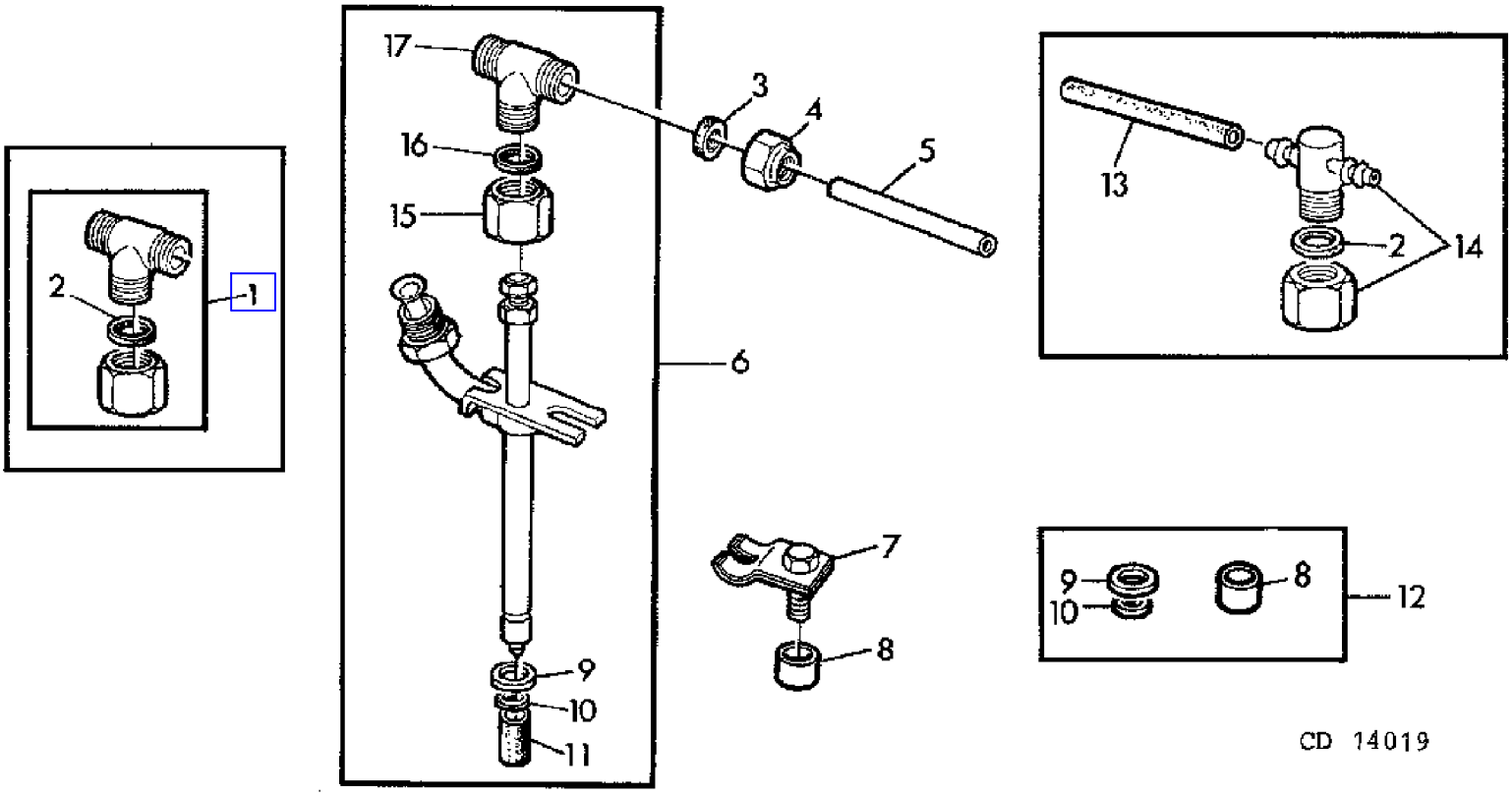

COPYRIGHT©1994 - 2008 DEERE & COMPANY Moline, Illinois All rights reserved

(1D03) FUEL INJECTION NOZZLE "STANADYNE"
INJECTEUR "STANADYNE"
KRAFTSTOFF-EINSPRITZDUESE "STANADYNE"
INIETTORE "STANADYNE"
INYECTOR "STANADYNE"
BRANSLEINSPRUTARE "STANADYNE"

KEY	PART NO.	PART NAME	QTY	ENGINE SERIAL NO.	955	REMARKS
1	AR85618	CAP	AR		X	KIT (W/ AR89563)
2	T29539	WASHER	6		X	(ORD R79605)
3	R51936	PACKING	12		X	(W/ AR89563)
4	R51937	TUBE NUT	12		X	(W/ AR89563)
5	R66090	TUBE	5		X	(W/ AR89563)
6	AR89563	INJECTION NOZZLE	6		X	ASSY, STANADYNE 27334 (SUB FOR AR73673, AR88236, AR88239)
7	R34760	CLAMP	6		X	
8	R60745	SPACER	6		X	NSEP (ORD RE13887 APPL) (SUB FOR R34761)
9	R60746	WASHER	6		X	UP, NSEP (ORD RE13887)
10	R48000	WASHER	6		X	LOW, NSEP (ORD RE13887 APPL)
11	T24472	PLUG	6		X	
12	RE13887	O-RING KIT	AR		X	KIT
13	.....	HOSE	AR	- 410663	X	NSEP (ORD R68281 W/ AR88236)
14	AT27622	CAP	6	- 410663	X	(W/ AR88236)
15	R79604	TUBE NUT	1		X	
16	R79605	WASHER	1		X	
17	R79606	TEE FITTING	1		X	
..	R68281	BULK HOSE	AR		X	LGTH = 1,5 M 59" (SUB FOR AT32064)

COPYRIGHT©1994 - 2008 DEERE & COMPANY Moline, Illinois All rights reserved

(1D02) FUEL INJECTION PUMP"ROTO DIESEL"
POMPE D'INJECTION ROTO DIESEL
KRAFTSTOFF-EINSPRITZPUMPE"ROTO DIESEL"
POMPA INIEZIONE"ROTO DIESEL"
BOMBA DE INYECCION DE COMBUSTIBLE"ROTO DIESEL"
INSPRUTNINGSPUMP"ROTO DIESEL"

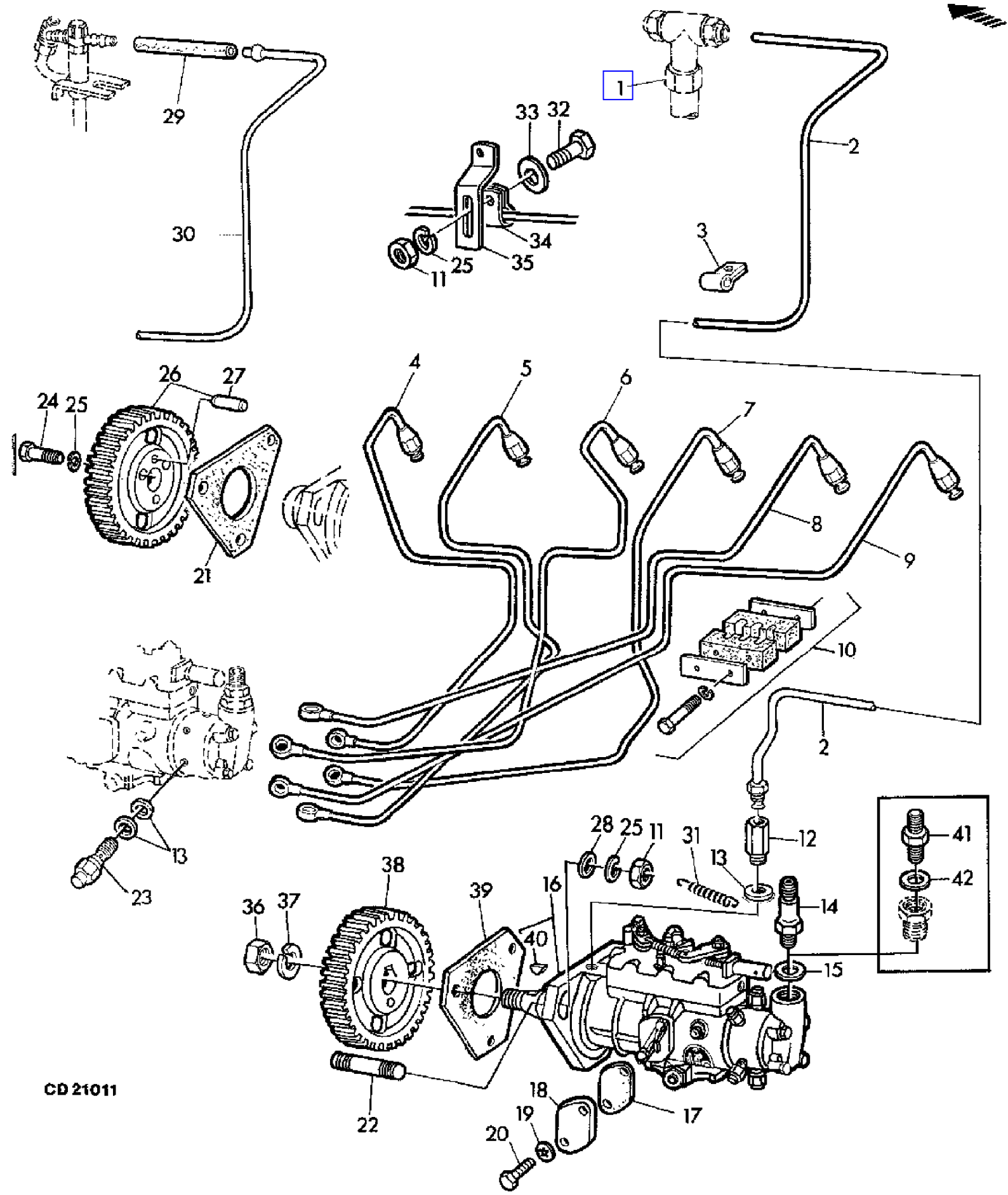

COPYRIGHT©1994 - 2008 DEERE & COMPANY Moline, Illinois All rights reserved

(1D02) FUEL INJECTION PUMP"ROTO DIESEL"
POMPE D'INJECTION ROTO DIESEL
KRAFTSTOFF-EINSPRITZPUMPE"ROTO DIESEL"
POMPA INIEZIONE"ROTO DIESEL"
BOMBA DE INYECCION DE COMBUSTIBLE"ROTO DIESEL"
INSPRUTNINGSPUMP"ROTO DIESEL"

KEY	PART NO.	PART NAME	QTY	ENGINE SERIAL NO.			955	REMARKS
1	.....	INJECTION NOZZLE	6				X	(ORD AR89563)
2	AR89959	LINE	1	410664	-		X	
3	T29969	CLAMP	1				X	
4	AR67737	FUEL LINE	1				X	NO.1 (ORD RE20787, RE20788)
	RE20787	FUEL LINE	AR				X	NO.1
5	AR67738	FUEL LINE	1				X	NO.2 (ORD RE20788)
	RE20788	FUEL LINE	AR				X	NO.2
6	AR67739	FUEL LINE	1				X	NO.3
7	AR67740	FUEL LINE	1				X	NO.4
8	AR67741	FUEL LINE	1				X	NO.5
9	AR67742	FUEL LINE	1				X	NO.6
10	DD13912	FLANGE	2				X	(SUB FOR AR62194)
11	14H785	NUT	4				X	5/16"
12	RE11602	BALL CHECK	1				X	(SUB FOR AR76102)
13	T20055	WASHER	13				X	
14	R79015	FITTING	AR				X	
15	T24619	WASHER	1				X	
16	AR72878	FUEL INJECTION PUMP	1		-	534845	X	ROTO DIESEL R3462350, ASSY, INCL KEYS 12-15,17-20,23,31
	RE11317	FUEL INJECTION PUMP	1	534846	-		X	ROTO DIESEL R3462F630, ASSY, INCL KEYS 12-15,17-20,23,31,36,37,40
17	T24543	GASKET	1				X	
18	T24542	COVER	1				X	
19	12H295	LOCK WASHER	2				X	NO.10
20	T24544	SCREW	2				X	
21	T24460	GASKET	1		-	534845	X	
22	T23442	STUD	3				X	
23	AT29464	VALVE	6				X	
24	19H2551	CAP SCREW	3		-	534845	X	5/16"X3/4"
25	12H303	LOCK WASHER	7		-	534845	X	5/16"
	12H303	LOCK WASHER	4	534846	-		X	5/16"
26	AR85710	GEAR	1		-	534845	X	Z = 48 (W/ T28030) (SUB FOR AT27917)
27	T28030	DOWEL PIN	1		-	534845	X	
28	24H1243	WASHER	3				X	11/32"X5/8"X.060"
29	.....	HOSE	1		-	410663	X	NSEP (ORD R68281)
30	AR72882	FUEL LINE	1		-	410663	X	
31	T26058	SPRING	1				X	
32	19H1900	CAP SCREW	1				X	5/16"X3/4"
33	24H1136	WASHER	1				X	11/32"X11/16"X.060"
34	T13914	CLAMP	1				X	
35	R48569	BRACKET	1				X	
36	R78743	NUT	1	534846	-		X	M14 (SUB FOR 14M7150)
37	12H317	LOCK WASHER	1	534846	-		X	9/16"
38	R76964	PINION	1	534846	-		X	

COPYRIGHT©1994 - 2008 DEERE & COMPANY Moline, Illinois All rights reserved

(1D02) FUEL INJECTION PUMP"ROTO DIESEL"
POMPE D'INJECTION ROTO DIESEL
KRAFTSTOFF-EINSPRITZPUMPE"ROTO DIESEL"
POMPA INIEZIONE"ROTO DIESEL"
BOMBA DE INYECCION DE COMBUSTIBLE"ROTO DIESEL"
INSPRUTNINGSPUMP"ROTO DIESEL"

KEY	PART NO.	PART NAME	QTY	ENGINE SERIAL NO.		955	REMARKS
39	R77126	GASKET	1	534846	-	X	
40	R56131	SHAFT KEY	1	534846	-	X	
41	T24607	ADAPTER	1			X	(ORD R79015 W/ T24619)
42	T24608	WASHER	1			X	(FOR T24607)
..	R68281	BULK HOSE	AR			X	LGTH = 1,5 M 59" (SUB FOR AT32064)

COPYRIGHT©1994 - 2008 DEERE & COMPANY Moline, Illinois All rights reserved

(1C22) FUEL PUMP "AC" AND "SOFABEX"
POMPE D'ALIMENTATION "AC" ET "SOFABEX"
KRAFTSTOFFOERDERPUMPE "AC" UND "SOFABEX"
POMPA ALIMENTAZIONE "AC" E "SOFABEX"
BOMBA DE ALIMENTACION DE COMBUSTIBLE "AC" Y "SOFABEX"
MATAREPUMP "AC" OCH "SOFABEX"

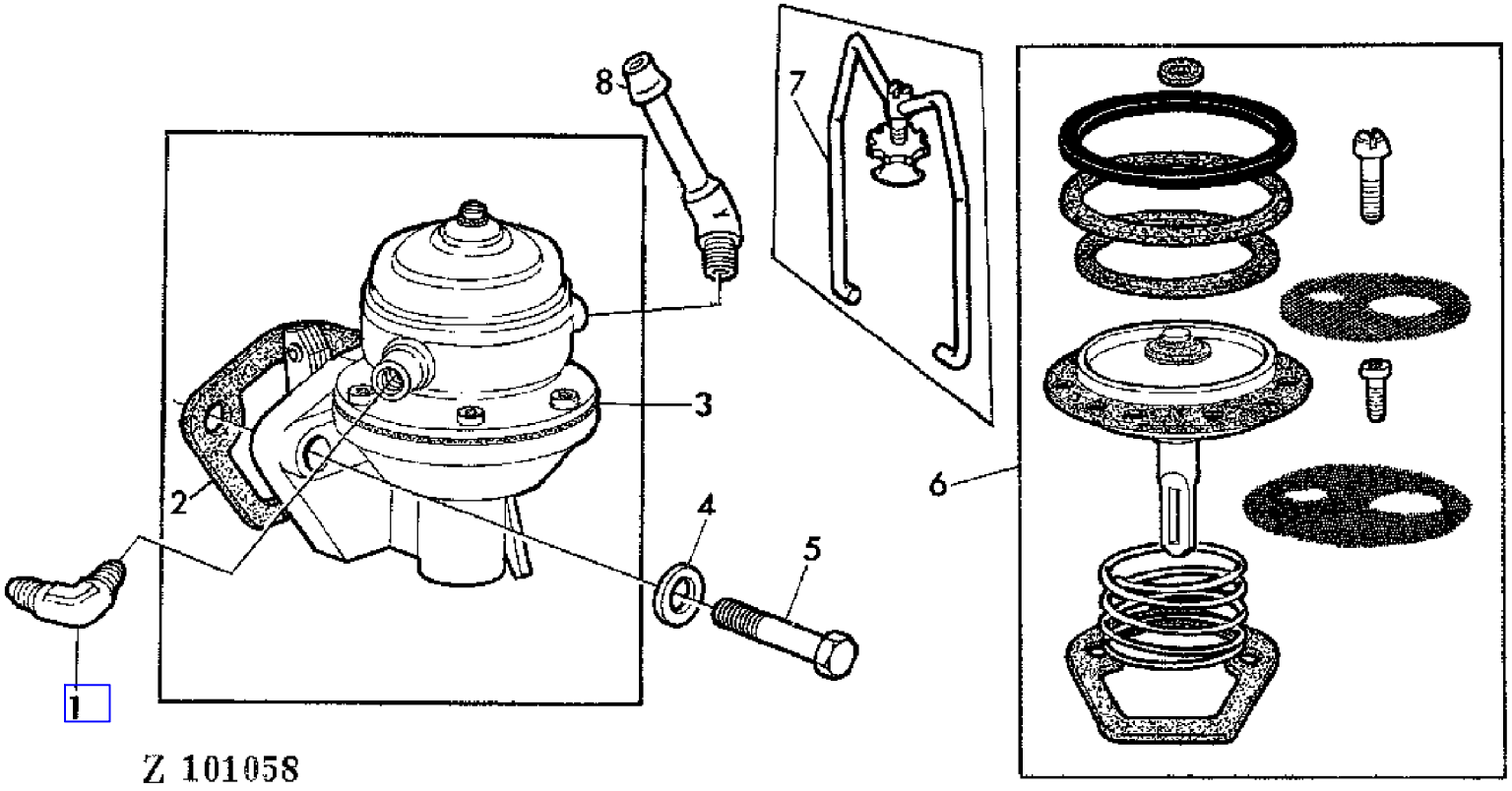

COPYRIGHT©1994 - 2008 DEERE & COMPANY Moline, Illinois All rights reserved

(1C22) FUEL PUMP "AC" AND "SOFABEX"
POMPE D'ALIMENTATION "AC" ET "SOFABEX"
KRAFTSTOFFOERDERPUMPE "AC" UND "SOFABEX"
POMPA ALIMENTAZIONE "AC" E "SOFABEX"
BOMBA DE ALIMENTACION DE COMBUSTIBLE "AC" Y "SOFABEX"
MATAREPUMP "AC" OCH "SOFABEX"

KEY	PART NO.	PART NAME	QTY	ENGINE SERIAL NO.	955	REMARKS
1	R82131	ELBOW FITTING	1	- 377809	X	(SUB FOR T30738)
2	R27285	GASKET	1	- 377809	X	
3	DD14292	FUEL PUMP	1	- 377809	X	ASSY, INCL KEY 2 (SUB FOR AR52729, DD13483)
4	T27860	WASHER	2	- 377809	X	(SUB FOR R20498)
5	19H1849	CAP SCREW	2	- 377809	X	5/16"X1-1/4"
6	RE13517	KIT	1	- 377809	X	KIT (SUB FOR AR102452, AR60559)
7	AT10638	BAIL	1	- 236201	X	
8	H32572	HOSE FITTING	1	- 377809	X	

COPYRIGHT©1994 - 2008 DEERE & COMPANY Moline, Illinois All rights reserved

(1D22) FUEL SHUT-OFF VALVE
ROBINET DE COMBUSTIBLE
KRAFTSTOFFABSPERRHAHN
VALVOLA ARRESTO GASOLIO
LLAVE DE PASO DEL DEPOSITO DE COMBUSTIBLE
BRAENSLEAVSTAENGNINGSVENTIL

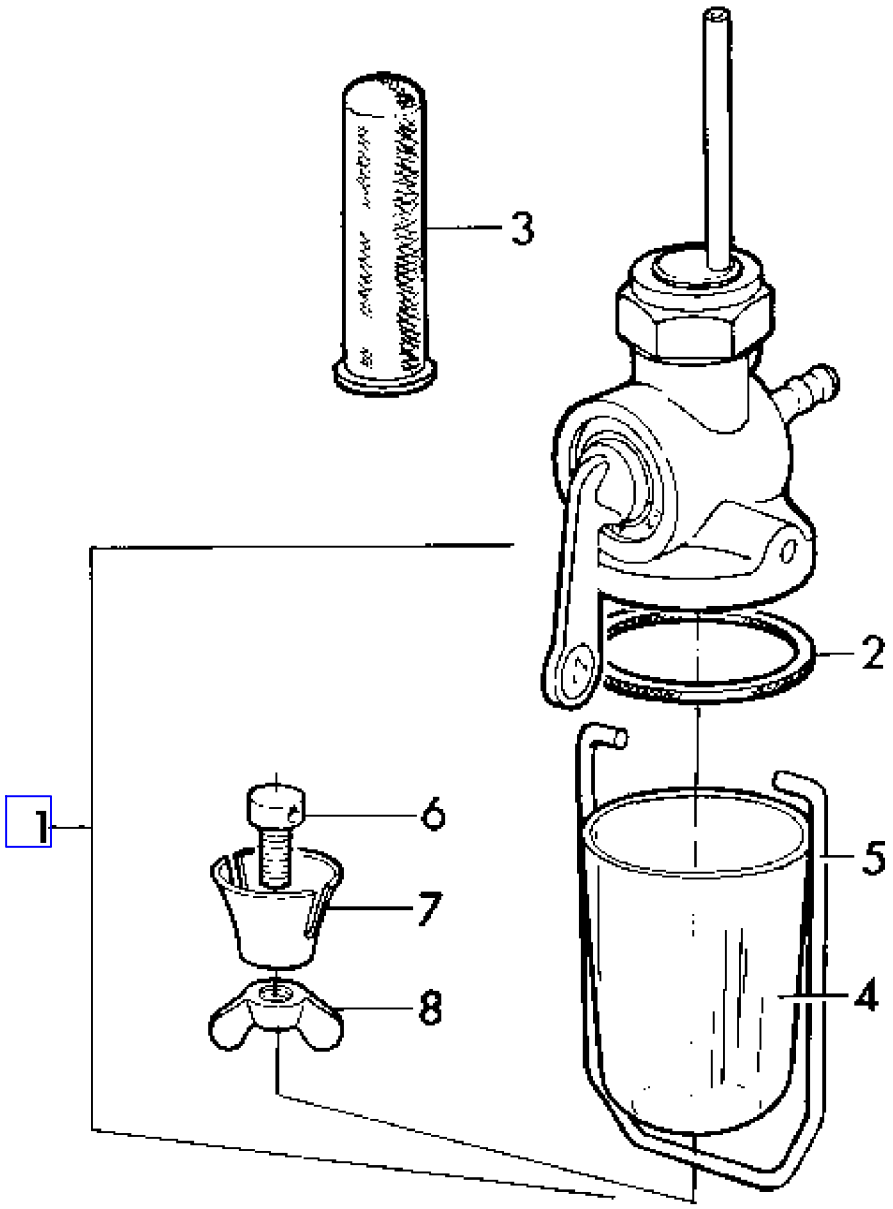

Z 10354

COPYRIGHT©1994 - 2008 DEERE & COMPANY Moline, Illinois All rights reserved

(1D22) FUEL SHUT-OFF VALVE
ROBINET DE COMBUSTIBLE
KRAFTSTOFFABSPERRHAHN
VALVOLA ARRESTO GASOLIO
LLAVE DE PASO DEL DEPOSITO DE COMBUSTIBLE
BRAENSLEAVSTAENGNINGSVENTIL

KEY	PART NO.	PART NAME	QTY	SERIAL NO.			955	REMARKS
1	AZ19883	SEDIMENT BOWL	1		-	008281	X	ASSY, INCL KEYS 2,4-8
2	Z32034	SEAL	1		-	008281	X	
3	AZ25107	SCREEN	1	006016	-	008281	X	(SUB FOR Z32028)
4	Z32030	SEDIMENT BOWL	1		-	008281	X	
5	Z32029	BEZEL	1		-	008281	X	INCL KEY 6
6	.....	SET SCREW	1		-	008281	X	(ORD Z32029)
7	Z32031	CLAMP	1		-	008281	X	
8	Z32032	WING NUT	1		-	008281	X	

COPYRIGHT©1994 - 2008 DEERE & COMPANY Moline, Illinois All rights reserved

(1D24) FUEL TANK
RESERVOIR A COMBUSTIBLE
KRAFTSTOFFTANK
SERBATOIO COMBUSTIBILE
DEPOSITO DE COMBUSTIBLE
BRAENSLETANK

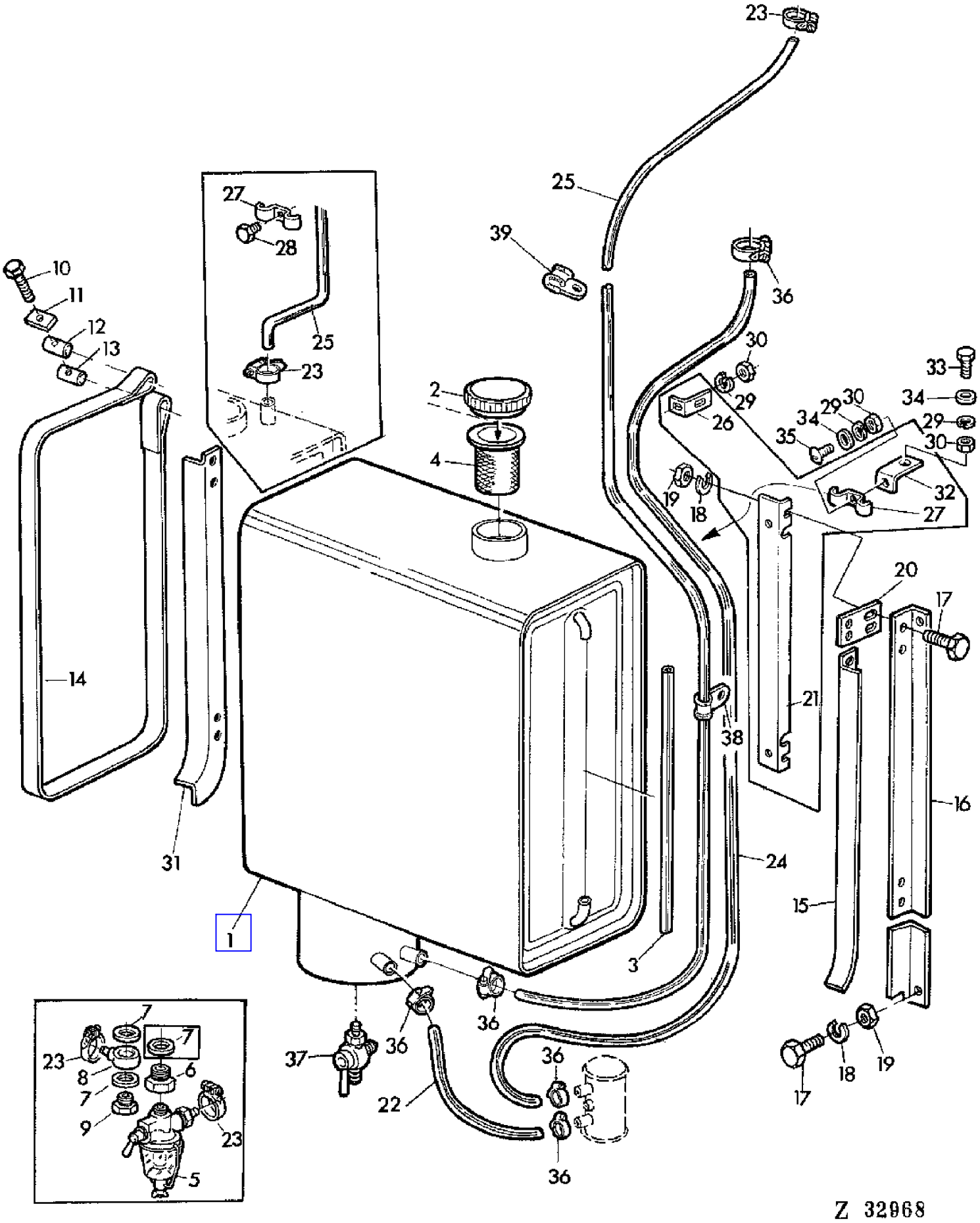

COPYRIGHT©1994 - 2008 DEERE & COMPANY Moline, Illinois All rights reserved

(PC4146) 955 Combine

(1D24) FUEL TANK
RESERVOIR A COMBUSTIBLE
KRAFTSTOFFTANK
SERBATOIO COMBUSTIBILE
DEPOSITO DE COMBUSTIBLE
BRAENSLETANK

KEY	PART NO.	PART NAME	QTY	SERIAL NO.			955	REMARKS
1	AZ25913	FUEL TANK	1				X	ASSY, INCL KEYS 2-4 (SUB FOR AZ19887, AZ24392)
2	99M7013	FILLER CAP	1				X	
3	Z31447	HOSE	1				X	LGTH = 570 MM
4	AZ32294	STRAINER	1				X	(SUB FOR AZ14387)
5	AZ19883	SEDIMENT BOWL	1		-	008281	X	ASSY
6	Z32033	FITTING	1		-	008281	X	
7	51M7013	RING	3		-	006015	X	12X17MM
8	Z30535	FITTING	1		-	008281	X	
9	38M4355	FITTING	1		-	008281	X	6MM
10	19M7385	CAP SCREW	1				X	M10X70
11	Z21659	WASHER	2				X	
12	Z21660	PIN	2				X	
13	Z21661	PIN	2				X	
14	Z21658	BAND	2				X	
15	Z35414	HOLDER	1				X	FRONT (SUB FOR Z31881)
16	Z21918	ANGLE	2				X	
17	19M7163	CAP SCREW	20				X	M8X25
18	12M7008	LOCK WASHER	20				X	8MM
19	14M7029	NUT	20				X	M8
20	Z31879	PLATE	4				X	
21	Z31219	SUPPORT	1		-	008281	X	
22	Z36863	HOSE	1	015898	-		X	
23	Z21240	CLAMP	2				X	
24	Z37619	HOSE	1		-	008281	X	LGTH = 2100 MM (SUB FOR Z31221)
	Z36930	HOSE	1	008282	-	015897	X	LGTH = 2350 MM (SUB FOR Z35409, Z37123)
	Z36930	HOSE	1	015898	-		X	(SUB FOR Z35409, Z37123)
25	Z37619	HOSE	1		-	008281	X	LGTH = 2450 MM (SUB FOR Z34873)
	Z35201	HOSE	1	008282	-	015897	X	LGTH = 1800 MM
	Z37619	HOSE	1	015898	-		X	(SUB FOR Z34873)
26	Z22060	ANGLE	2		-	008281	X	
27	Z22063	CLAMP	4		-	008281	X	
28	19M6614	CAP SCREW	4				X	M6X12
29	12M7012	LOCK WASHER	6				X	6MM
30	14M7027	NUT	6				X	M6
31	Z35413	HOLDER	1				X	REAR (SUB FOR Z21917)
32	Z32351	ANGLE	1		-	XXXX	X	
33	19M7375	CAP SCREW	1				X	M6X18
34	24M7054	WASHER	1				X	6,4MM
35	21M7088	SCREW	1				X	M6X12
36	Z21240	CLAMP	2		-	008281	X	
	Z22560	CLAMP	2	008282	-		X	
37	AZ23843	SHUT-OFF VALVE	1	008282	-		X	
38	Z36861	CLAMP	2	008282	-		X	(SUB FOR Z28399)

COPYRIGHT©1994 - 2008 DEERE & COMPANY Moline, Illinois All rights reserved

(1D24) FUEL TANK
RESERVOIR A COMBUSTIBLE
KRAFTSTOFFTANK
SERBATOIO COMBUSTIBILE
DEPOSITO DE COMBUSTIBLE
BRAENSLETANK

KEY	PART NO.	PART NAME	QTY	SERIAL NO.		955	REMARKS
39	Z21993	CLAMP	2	008282	-	X	

COPYRIGHT©1994 - 2008 DEERE & COMPANY Moline, Illinois All rights reserved

(1F12) FUSE BOX,HORN,HEADLIGHTS,CLEARANCE LIGHTS
BOITIER DES FUSIBLES,AVERTISSEUR,PHARES,FEUX DE POSITION
SICHERUNGSKASTEN,HUPE,SCHEINWERFER,POSITIONSLEUCHTEN
SCATOLA FUSIBILI,AVVISATORE ACUSTICO,FARI,LUCI D'INGOMBRO
CAJA DE FUSIBLES,BOCINA,FAROS,LUCES DE POSICION
SAKRINGSHALLARE,SIGNALHORN,STRALKASTARE,POSITIONSLJUS

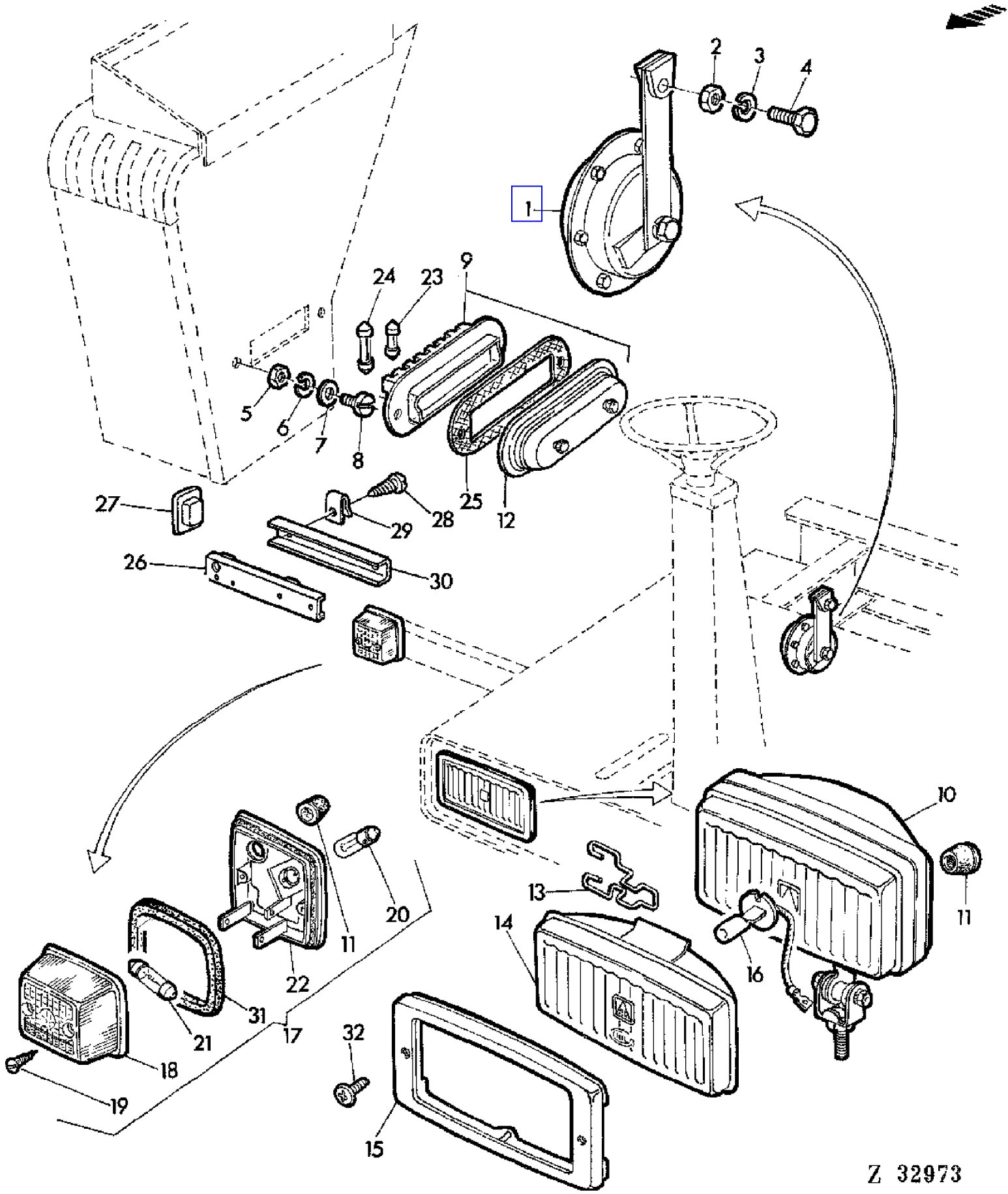

COPYRIGHT©1994 - 2008 DEERE & COMPANY Moline, Illinois All rights reserved

(PC4146) 955 Combine

(1F12) FUSE BOX,HORN,HEADLIGHTS,CLEARANCE LIGHTS
BOITIER DES FUSIBLES,AVERTISSEUR,PHARES,FEUX DE POSITION
SICHERUNGSKASTEN,HUPE,SCHEINWERFER,POSITIONSLEUCHTEN
SCATOLA FUSIBILI,AVVISATORE ACUSTICO,FARI,LUCI D'INGOMBRO
CAJA DE FUSIBLES,BOCINA,FAROS,LUCES DE POSICION
SAKRINGSHALLARE,SIGNALHORN,STRALKASTARE,POSITIONSLJUS

KEY	PART NO.	PART NAME	QTY	SERIAL NO.	955	REMARKS
1	AZ38323	HORN	1		X	(SUB FOR AZ12135)
2	14M7029	NUT	AR		X	M8
3	12M7008	LOCK WASHER	AR		X	8MM
4	19M7139	CAP SCREW	1		X	M8X20
5	14M7139	NUT	AR		X	M4
6	12M7031	LOCK WASHER	AR		X	4MM
7	24M7117	WASHER	2		X	4,3MM
8	21M7135	SCREW	2		X	M4X25
9	AZ23046	FUSE BOX	1		X	INCL KEYS 25,12
10	AZ30845	HEADLIGHT	2		X	INCL KEYS 11-15 (SUB FOR AZ23567)
	AZ30846	HEADLIGHT	2		X	(A) INCL KEYS 11-15 (SUB FOR AZ23567)
11	Z34569	GROMMET	4		X	
12	AZ24774	COVER	1		X	
13	Z34570	SPRING	AR		X	
14	AZ23623	LENS	2		X	INCL KEY 13
	AZ24078	REFLECTOR	2		X	(A) INCL KEY 13
15	Z41169	BEZEL	2		X	(SUB FOR AZ23621)
16	Z26998	BULB	2		X	12V 55W
17	AL25644	TURN SIGNAL LAMP	2		X	INCL KEYS 11,18,19,31 (SUB FOR AZ23564)
18	AL27013	LENS	2		X	INCL KEY 19 (SUB FOR AZ23622)
19	37M7034	SCREW	4		X	4,2X32MM
20	57M7014	BULB	2		X	12VX21W
21	57M6274	BULB	2		X	12VX5W
22	.....	SOCKET	2		X	NSEP (ORD KEY 17)
23	AZ23593	FUSE	AR		X	25A
24	99M7048	FUSE	AR		X	8A
25	Z35998	GASKET	1		X	
26	AZ22692	CHANNEL	1		X	
27	Z34505	PLUG	2		X	
28	37M7009	SCREW	AR		X	5,5X19MM
29	Z20443	NUT	2		X	
30	Z33702	CHANNEL	1		X	
31	Z40994	GASKET	2		X	
32	37M7035	BOLT	4		X	4X18MM

(A) YELLOW
JAUNE
GELB
GIALLO
AMARILLO
GUL

COPYRIGHT©1994 - 2008 DEERE & COMPANY Moline, Illinois All rights reserved

(3B12) GEAR SHIFTING PARTS
COMMANDE DES VITESSES
GANGSCHALTUNG
TIRANTERIA DEL CAMBIO
COMPONENTES PARA EL CAMBIO DE VELOCIDADES
VAXLINGSLANKAGE

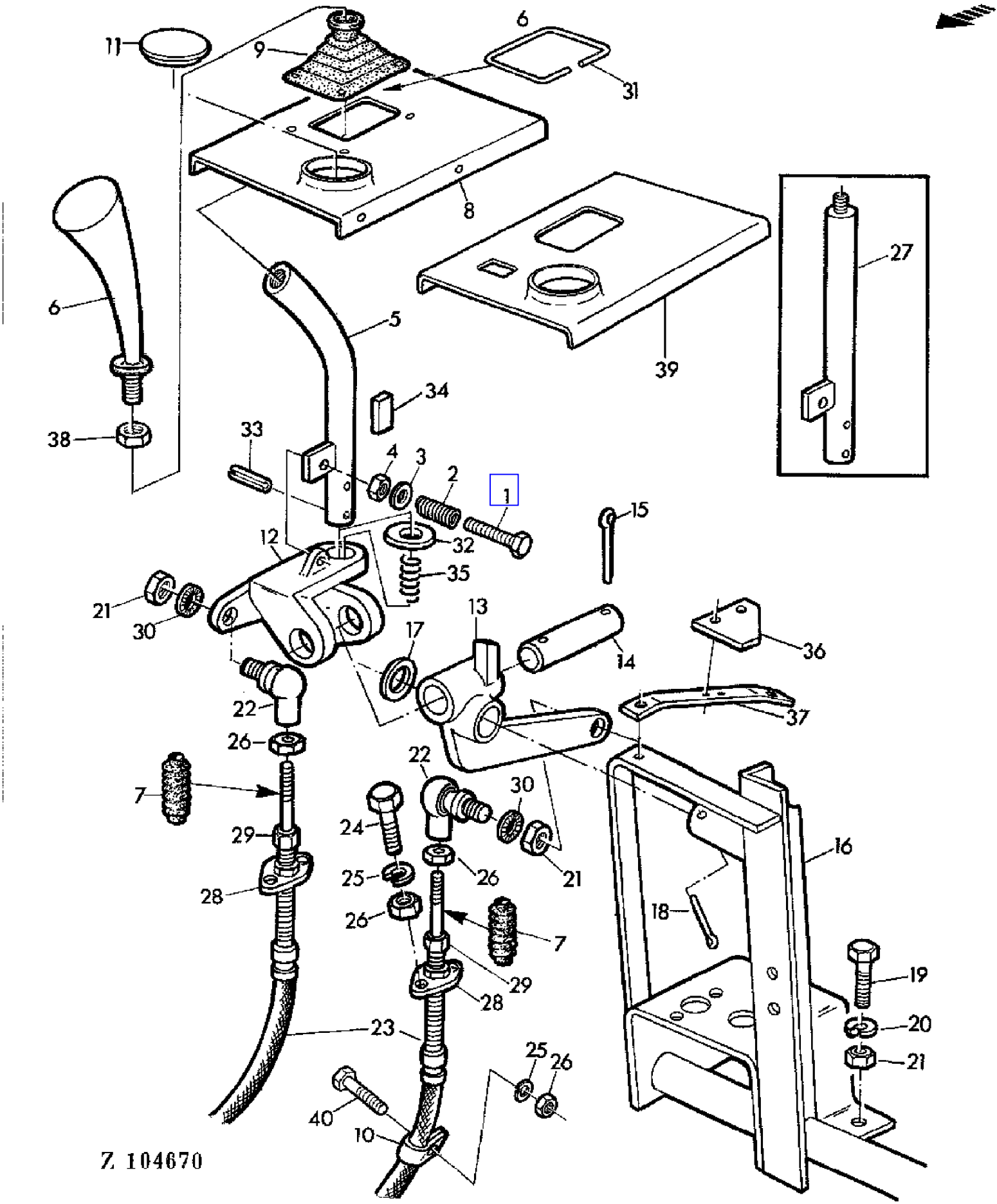

COPYRIGHT©1994 - 2008 DEERE & COMPANY Moline, Illinois All rights reserved

(3B12) GEAR SHIFTING PARTS
COMMANDE DES VITESSES
GANGSCHALTUNG
TIRANTERIA DEL CAMBIO
COMPONENTES PARA EL CAMBIO DE VELOCIDADES
VAXLINGSLANKAGE

KEY	PART NO.	PART NAME	QTY	SERIAL NO.		955	REMARKS
1	19M7320	CAP SCREW	1			X	M6X40
2	107SEL	COMPRESSION SPRING	1			X	
3	Z26250	WASHER	1			X	
4	14M7165	LOCK NUT	1			X	M6
5	AZ23840	LEVER	1		- 018097	X	
	AZ31048	LEVER	1	018098	-	X	(SUB FOR AZ27758)
6	AZ31250	GRIP	1			X	
7	Z32405	BOOT	2			X	
8	Z35755	COVER	1			X	(ORD W/ Z33708) (SUB FOR Z32526)
9	Z30194	BOOT	1			X	
10	Z22067	CLAMP	AR			X	
11	Z33708	PLUG	1			X	(SUB FOR T22569, Z29064)
12	Z10735	LEVER	1		- 018097	X	
	Z11213	LEVER	1	018098	-	X	
13	Z10736	LEVER	1			X	
14	Z30715	PIN	1			X	
15	11M7020	COTTER PIN	2			X	4X25MM
16	AZ19346	BRACKET	1		- 018097	X	
	AZ27759	BRACKET	1	018098	-	X	
17	24M7049	WASHER	1			X	18MM
18	11M7026	COTTER PIN	1			X	5X25MM
19	19M7284	CAP SCREW	AR			X	M8X18
20	12M7008	LOCK WASHER	AR			X	8MM
21	14M7029	NUT	AR			X	M8
22	AZ19889	BALL JOINT	2			X	
23	AZ29787	PUSH PULL CABLE	2			X	ASSY, INCL KEYS 7,28,29 (SUB FOR AZ21469)
24	19M7159	CAP SCREW	AR			X	M6X16
25	12M7012	LOCK WASHER	AR			X	6MM
26	14M7027	NUT	AR			X	M6
27	AZ27758	LEVER	1			X	(ORD AZ31048 W/ AZ31250, 14M7357)
28	AZ21204	BALL JOINT	2			X	
29	AZ21203	NUT	2			X	
30	12M7032	LOCK WASHER	2			X	8,4MM
31	Z35851	REINFORCEMENT	1			X	
32	24M7108	WASHER	1	018098	-	X	20MM
33	34M7029	SPRING PIN	1	018098	-	X	4X30MM
34	49M4039	SHAFT KEY	1	018098	-	X	6X32MM
35	T44879	COMPRESSION SPRING	1	018098	-	X	(SUB FOR Z38535)
36	Z38527	HOLDER	1	018098	-	X	

(A) FOR TOP SACKER
POUR ENSACHEUR SUPERIEUR
FUER TOP-SACKER
PER INSACCATORE SUPERIORE
PARA ENSACADOR SUPERIOR
FOR OVRE SACKNINGSPLATTFORM

COPYRIGHT©1994 - 2008 DEERE & COMPANY Moline, Illinois All rights reserved

(3B12) GEAR SHIFTING PARTS
COMMANDE DES VITESSES
GANGSCHALTUNG
TIRANTERIA DEL CAMBIO
COMPONENTES PARA EL CAMBIO DE VELOCIDADES
VAXLINGSLANKAGE

KEY	PART NO.	PART NAME	QTY	SERIAL NO.		955	REMARKS
37	Z38530	RETAINER	1	018098	-	X	
	Z38532	RETAINER	1	018098	-	X	(A)
38	14M7357	NUT	1			X	M12X1,25
39	Z40983	COVER	1			X	AR
40	19M7160	CAP SCREW	AR			X	M6X30

(A) FOR TOP SACKER
POUR ENSACHEUR SUPERIEUR
FUER TOP-SACKER
PER INSACCATORE SUPERIORE
PARA ENSACADOR SUPERIOR
FOR OVRE SACKNINGSPLATTFORM

COPYRIGHT©1994 - 2008 DEERE & COMPANY Moline, Illinois All rights reserved

(4D24) GRAIN ELEVATOR
ELEVATEUR DE GRAIN
KOERNERELEVATOR
ELEVATORE GRANO
ELEVADOR DE GRANO LIMPIO
SAEDESELEVATOR

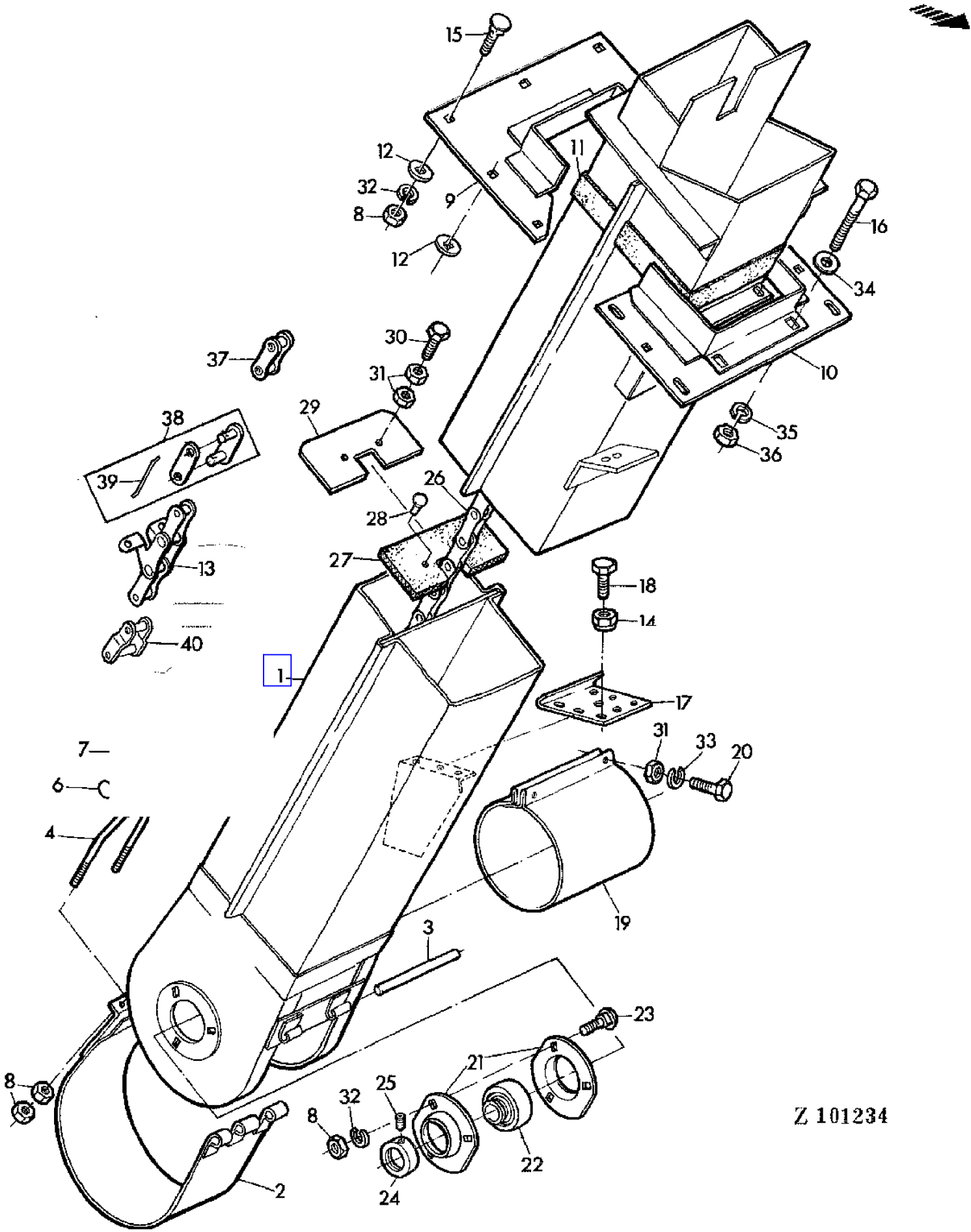

COPYRIGHT©1994 - 2008 DEERE & COMPANY Moline, Illinois All rights reserved

(4D24) GRAIN ELEVATOR
ELEVATEUR DE GRAIN
KOERNERELEVATOR
ELEVATORE GRANO
ELEVADOR DE GRANO LIMPIO
SAEDESELEVATOR

KEY	PART NO.	PART NAME	QTY	SERIAL NO.			955	REMARKS
1	AZ10294	HOUSING	1		-	010731	X	(ORD AZ25453 W/ AZ25442)
	AZ25453	HOUSING	1	010732	-		X	
2	AZ10315	COVER	1		-	010731	X	
	AZ25442	COVER	1	010732	-		X	
3	Z20627	PIN	1				X	
4	Z20619	U-BOLT	1				X	
5	Z11406	LEVER	1				X	(SUB FOR H11360)
6	Z21059	PIN	1				X	
7	11M7009	COTTER PIN	1				X	2X18MM
8	14M7029	NUT	18				X	M8
9	AZ10355	HOLDER	1				X	
10	AZ10357	HOLDER	1				X	
11	Z20778	GASKET	2				X	
12	24M7039	WASHER	9				X	9,5MM
13	AL15480	LINK CHAIN	AR				X	
14	14M7167	LOCK NUT	6				X	M10
15	03M7054	BOLT	11				X	M8X20
16	19M7328	CAP SCREW	2				X	M10X70
17	Z20523	SUPPORT	1				X	
18	19M7167	CAP SCREW	6				X	M10X25
19	Z20741	EXTENSION	1				X	(ORD AZ35683)
20	19M7286	CAP SCREW	2				X	M6X25
21	P47232	PRESSED FLANGED HOUSING	2				X	
22	JD39102	BALL BEARING	1				X	
23	03M7090	BOLT	3				X	M8X15
24	AZ10044	ECCENTRIC LOCKING COLLAR	1				X	ASSY, INCL KEY 25
25	AZ19843	SET SCREW	1				X	KIT
26	AZ10367	GATHERER CHAIN	1				X	L = 153, INCL KEYS 13,27,28,38-40
27	Z20781	PADDLE	38				X	
28	Z20779	RIVET	76				X	
29	Z20728	PADDLE	3				X	
30	19M7077	CAP SCREW	6				X	M6X20
31	14M7027	NUT	14				X	M6
32	12M7008	LOCK WASHER	14				X	8MM
33	12M7012	LOCK WASHER	2				X	6MM
34	24M7040	WASHER	6				X	11MM
35	12M7013	LOCK WASHER	2				X	10MM
36	14M7140	NUT	6				X	M10
37	AL15479	LINK	AR				X	
38	AL15481	CHAIN LINK	AR				X	INCL KEY 39
39	Z41567	WIRE	AR				X	
40	AL15482	CHAIN LINK	AR				X	

COPYRIGHT©1994 - 2008 DEERE & COMPANY Moline, Illinois All rights reserved

(4E04) GRAIN ELEVATOR DRIVE WITH HOUSING
ENTRAINEMENT ELEVATEUR DE GRAIN ET CARTER
KOERNERELEVATOR-ANTRIEB MIT GEHAEUSE
COMANDO E SCATOLA DEL ELEVATORE GRANO
TRANSMISION DEL ELEVADOR DE GRANO LIMPIO CON CARCASA
SADESELEVATORDRIVNING OCH HUS

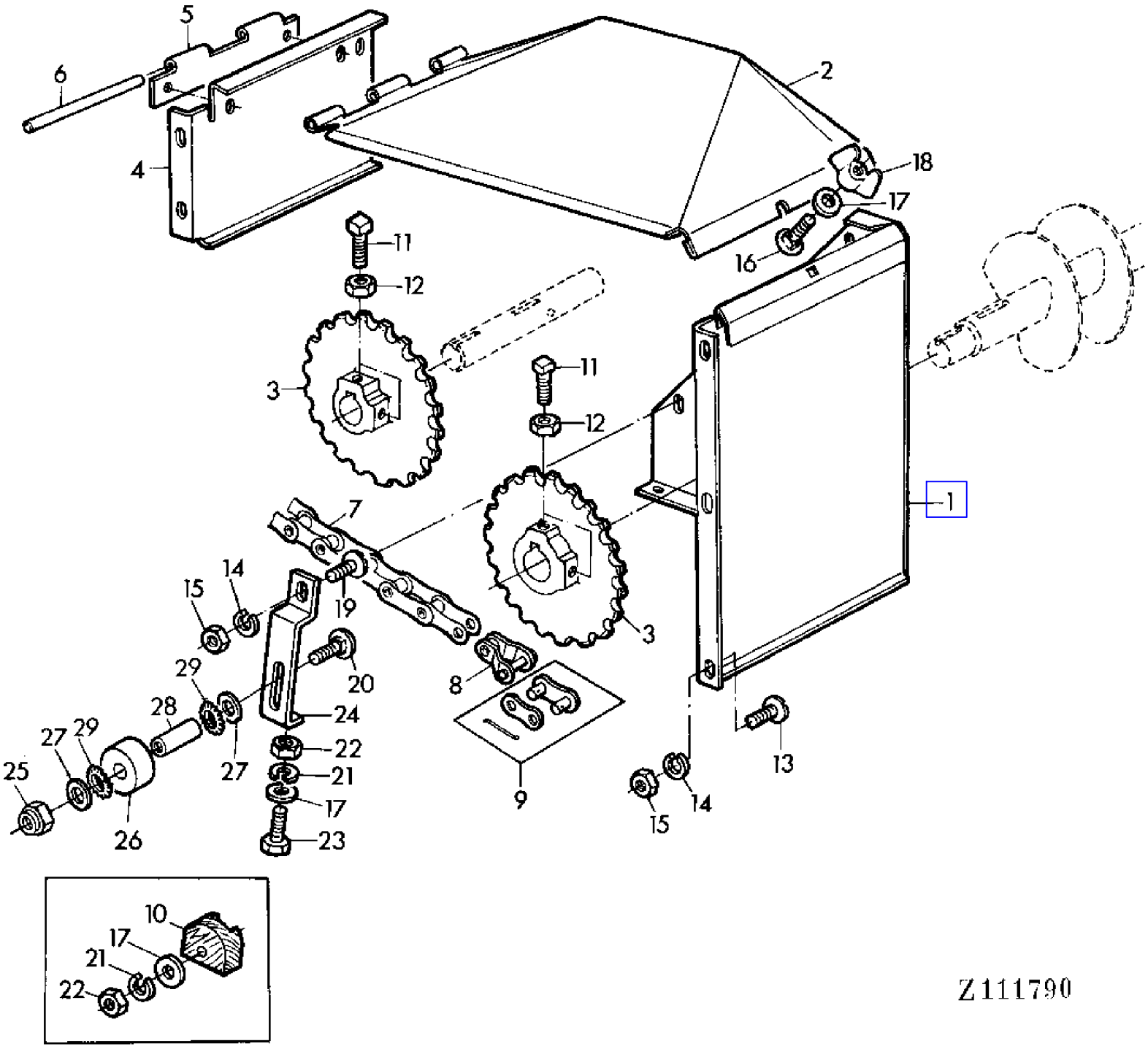

COPYRIGHT©1994 - 2008 DEERE & COMPANY Moline, Illinois All rights reserved

(4E04) GRAIN ELEVATOR DRIVE WITH HOUSING
ENTRAINEMENT ELEVATEUR DE GRAIN ET CARTER
KOERNERELEVATOR-ANTRIEB MIT GEHAEUSE
COMANDO E SCATOLA DEL ELEVATORE GRANO
TRANSMISION DEL ELEVADOR DE GRANO LIMPIO CON CARCASA
SADESELEVATORDRIVNING OCH HUS

KEY	PART NO.	PART NAME	QTY	SERIAL NO.		955	REMARKS
1	AZ19145	PANEL	1			X	
2	Z20639	GUARD	1			X	
3	Z10117	CHAIN SPROCKET	2			X	Z = 16
4	Z30560	PANEL	1			X	
5	Z20632	HINGE	1			X	
6	Z20669	PIN	1			X	
7	AZ32090	ROLLER CHAIN	1			X	L = 34, INCL KEY 9 (SUB FOR AZ10363)
8	AL15953	LINK	1			X	
9	AL15954	LINK	1			X	
10	Z27775	TIGHTENER	1			X	(SUB FOR Z20418)
11	Z26249	SET SCREW	4			X	
12	14M7152	NUT	4			X	M10
13	21M7087	SCREW	14			X	M6X12
14	12M7012	LOCK WASHER	16			X	6MM
15	14M7027	NUT	16			X	M6
16	03M7054	BOLT	1			X	M8X20
17	24M7036	WASHER	3			X	9MM
18	Z20285	WING NUT	1			X	
19	21M7085	SCREW	1			X	M6X20
20	03M7095	BOLT	1		- XXXX	X	M8X60
	03M7246	BOLT	1	XXXX	-	X	M10X60
21	12M7008	LOCK WASHER	2			X	8MM
22	14M7029	NUT	2			X	M8
23	19M7139	CAP SCREW	1			X	M8X20
24	Z44216	HOLDER	1			X	(SUB FOR Z20682)
25	14M7166	LOCK NUT	1		- XXXX	X	M8
	14M7167	LOCK NUT	1	XXXX	-	X	M10
26	Z41483	TIGHTENER	1		- XXXX	X	(SUB FOR AZ34262, Z27775)
	Z44030	TIGHTENER	1	XXXX	-	X	
27	24M7178	WASHER	2	XXXX	-	X	10,5MM
28	Z44032	BUSHING	1	XXXX	-	X	
29	12M7110	LOCK WASHER	AR			X	21MM
..	AZ34262	TIGHTENER	1		- XXXX	X	KIT

COPYRIGHT©1994 - 2008 DEERE & COMPANY Moline, Illinois All rights reserved

(4C11) GRAIN PAN
TABLE D'AMENEE
ZUFUEHRBODEN
TRAMOGGIA
TABLERO TRANSPORTADOR DE GRANO
UPPSAMLINGSPLAN

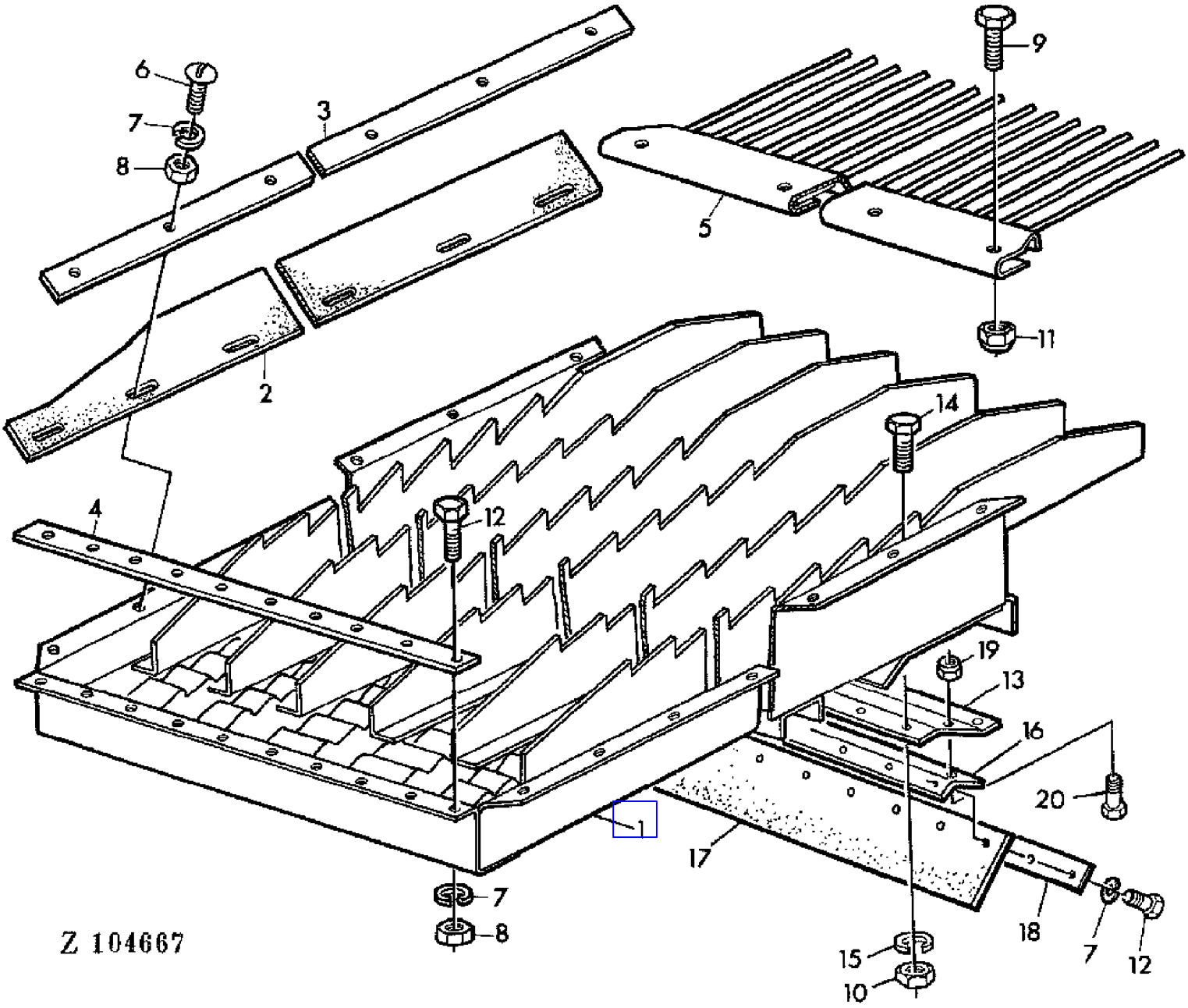

COPYRIGHT©1994 - 2008 DEERE & COMPANY Moline, Illinois All rights reserved

(PC4146) 955 Combine

(4C11) GRAIN PAN
TABLE D'AMENEE
ZUFUEHRBODEN
TRAMOGGIA
TABLERO TRANSPORTADOR DE GRANO
UPPSAMLINGSPLAN

KEY	PART NO.	PART NAME	QTY	SERIAL NO.			955	REMARKS
1	AZ10153	GRAIN PAN	1				X	
2	Z20307	GASKET	1				X	
3	Z20308	REINFORCEMENT	1				X	
4	Z21421	REINFORCEMENT	1				X	
5	AZ10155	EXTENSION	1				X	
6	21M7031	SCREW	AR				X	M6X15
7	12M7012	LOCK WASHER	AR				X	6MM
8	14M7027	NUT	AR				X	M6
9	19M7287	CAP SCREW	AR				X	M10X50
10	14M7029	NUT	AR				X	M8
11	14M7167	LOCK NUT	AR				X	M10
12	19M7159	CAP SCREW	AR				X	M6X16
13	Z31448	REINFORCEMENT	1		-	035027	X	
	Z31448	REINFORCEMENT	1	035028	-		X	(SUB FOR AZ32561)
14	19M7162	CAP SCREW	AR				X	M8X15
15	12M7008	LOCK WASHER	AR				X	8MM
16	AZ32560	REINFORCEMENT	1				X	
17	Z42637	WEATHERSTRIP	1	035028	-		X	
18	Z42646	REINFORCEMENT	1	035028	-		X	
19	14M7165	LOCK NUT	AR				X	M6
20	19M6614	CAP SCREW	AR				X	M6X12

COPYRIGHT©1994 - 2008 DEERE & COMPANY Moline, Illinois All rights reserved

(4C23) GRAIN PAN SHAFT AND SUPPORT
ARBRE ET SUPPORT DE TABLE A GRAIN
WELLE UND AUFHAENGER FUER STAFFELBODEN
ALBERO E SUPPORTO TRAMOGGIA
EJE Y PIEZAS DE SUSPENSION DE LA CHAPA ALIMENTADORA
AXEL OCH UPPHANGNING AV UPPSAMLINGSPLAN

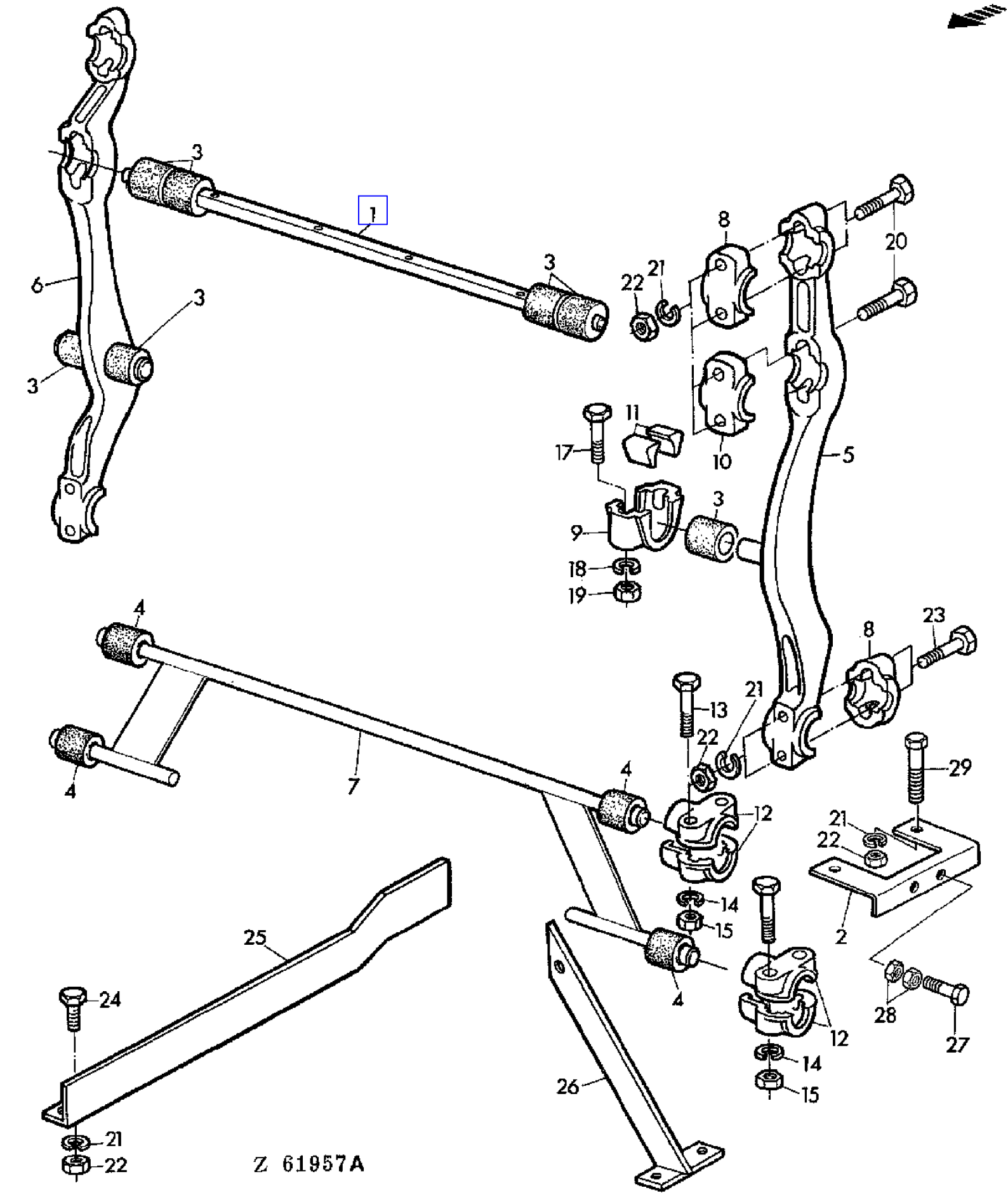

COPYRIGHT©1994 - 2008 DEERE & COMPANY Moline, Illinois All rights reserved

(4C23) GRAIN PAN SHAFT AND SUPPORT
ARBRE ET SUPPORT DE TABLE A GRAIN
WELLE UND AUFHAENGER FUER STAFFELBODEN
ALBERO E SUPPORTO TRAMOGGIA
EJE Y PIEZAS DE SUSPENSION DE LA CHAPA ALIMENTADORA
AXEL OCH UPPHANGNING AV UPPSAMLINGSPLAN

KEY	PART NO.	PART NAME	QTY	SERIAL NO.	955	REMARKS
1	AZ20121	SHAFT	1		X	ASSY, INCL KEY 3
2	Z33258	GUIDE	2		X	
3	P49545	BUSHING	6		X	
4	P42100	BUSHING	4		X	
5	AZ17705	HANGER	1		X	LH, ASSY, INCL KEY 3
6	AZ17704	HANGER	1		X	RH, ASSY, INCL KEY 3
7	AZ22627	HANGER	1		X	ASSY, INCL KEY 4
8	Z10639	BEARING	4		X	
9	Z10418	QUILL	2		X	
10	Z10634	HOUSING	2		X	
11	H10613	WEDGE	4		X	
12	PK1103H	BEARING	8		X	
13	19M7165	CAP SCREW	AR		X	M8X55
14	12M7008	LOCK WASHER	AR		X	8MM
15	14M7029	NUT	AR		X	M8
16	19M7185	CAP SCREW	AR		X	M8X60
17	19M7388	CAP SCREW	AR		X	M12X55
18	12M7014	LOCK WASHER	AR		X	12MM
19	14M7031	NUT	AR		X	M12
20	19M7328	CAP SCREW	AR		X	M10X60
21	12M7013	LOCK WASHER	8		X	10MM
22	14M7140	NUT	AR		X	M10
23	19M7156	CAP SCREW	AR		X	M10X70
24	19M7166	CAP SCREW	AR		X	M10X20
25	Z29015	REINFORCEMENT	1		X	
26	AZ17792	BRACE	1		X	
27	19M7387	CAP SCREW	AR		X	M12X40
28	14M7154	NUT	AR		X	M12
29	19M7381	CAP SCREW	AR		X	M10X28

COPYRIGHT©1994 - 2008 DEERE & COMPANY Moline, Illinois All rights reserved

(PC4146) 955 Combine

(4E14) GRAIN TANK
TREMIE
KORNTANK
SERRATOIO GRANO
TANQUE DE GRANO
SPANNMALSTANK

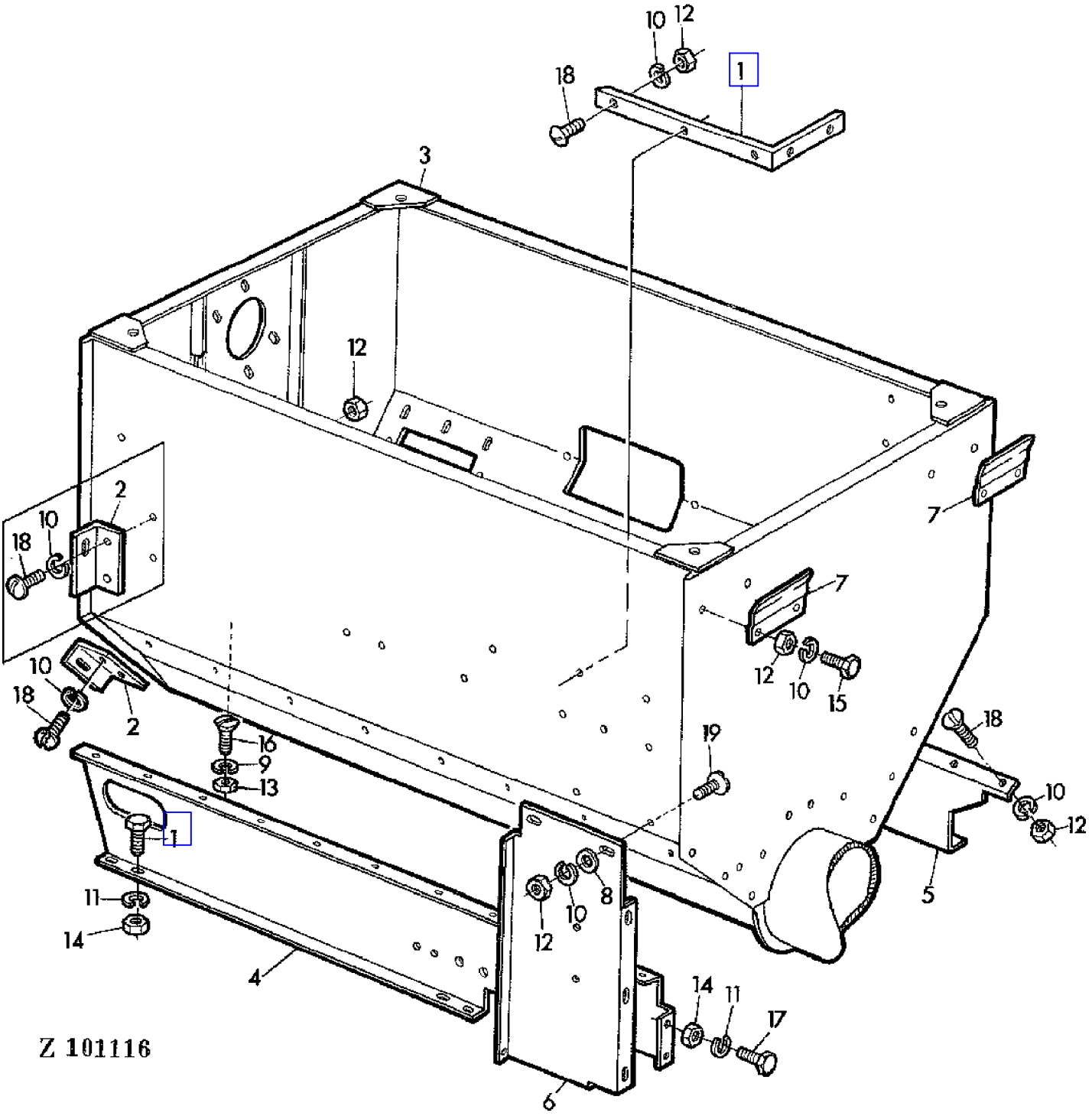

COPYRIGHT©1994 - 2008 DEERE & COMPANY Moline, Illinois All rights reserved

(PC4146) 955 Combine

(4E14) GRAIN TANK
TREMIE
KORNTANK
SERRATOIO GRANO
TANQUE DE GRANO
SPANNMALSTANK

KEY	PART NO.	PART NAME	QTY	SERIAL NO.		955	REMARKS
1	Z31421	ANGLE	1			X	
2	AZ18557	ANGLE	1		- 013397	X	
	AZ25509	ANGLE	1	013398	-	X	
3	AZ21420	TANK	1			X	
4	Z37718	SUPPORT	1			X	(SUB FOR Z21076)
5	Z37719	BRACKET	1			X	(SUB FOR Z21077)
6	Z31145	ANGLE	1			X	
7	Z32678	HOLDER	2		- 005371	X	
8	24M7261	WASHER	3			X	6,6MM
9	12M7008	LOCK WASHER	10			X	8MM
10	12M7012	LOCK WASHER	16			X	6MM
11	12M7013	LOCK WASHER	8			X	10MM
12	14M7027	NUT	16			X	M6
13	14M7029	NUT	10			X	M8
14	14M7140	NUT	8			X	M10
15	19M6614	CAP SCREW	4		- 005371	X	M6X12
16	21M7029	BOLT	10			X	M8X20
17	19M7166	CAP SCREW	8			X	M10X20
18	21M7031	SCREW	8			X	M6X12
19	21M7083	SCREW	8			X	M6X10

COPYRIGHT©1994 - 2008 DEERE & COMPANY Moline, Illinois All rights reserved

(PC4146) 955 Combine

(4E16) GRAIN TANK
TREMIE
KORNTANK
SERBATOIO GRANO
TANQUE DE GRANO
SPANNMALSTANK

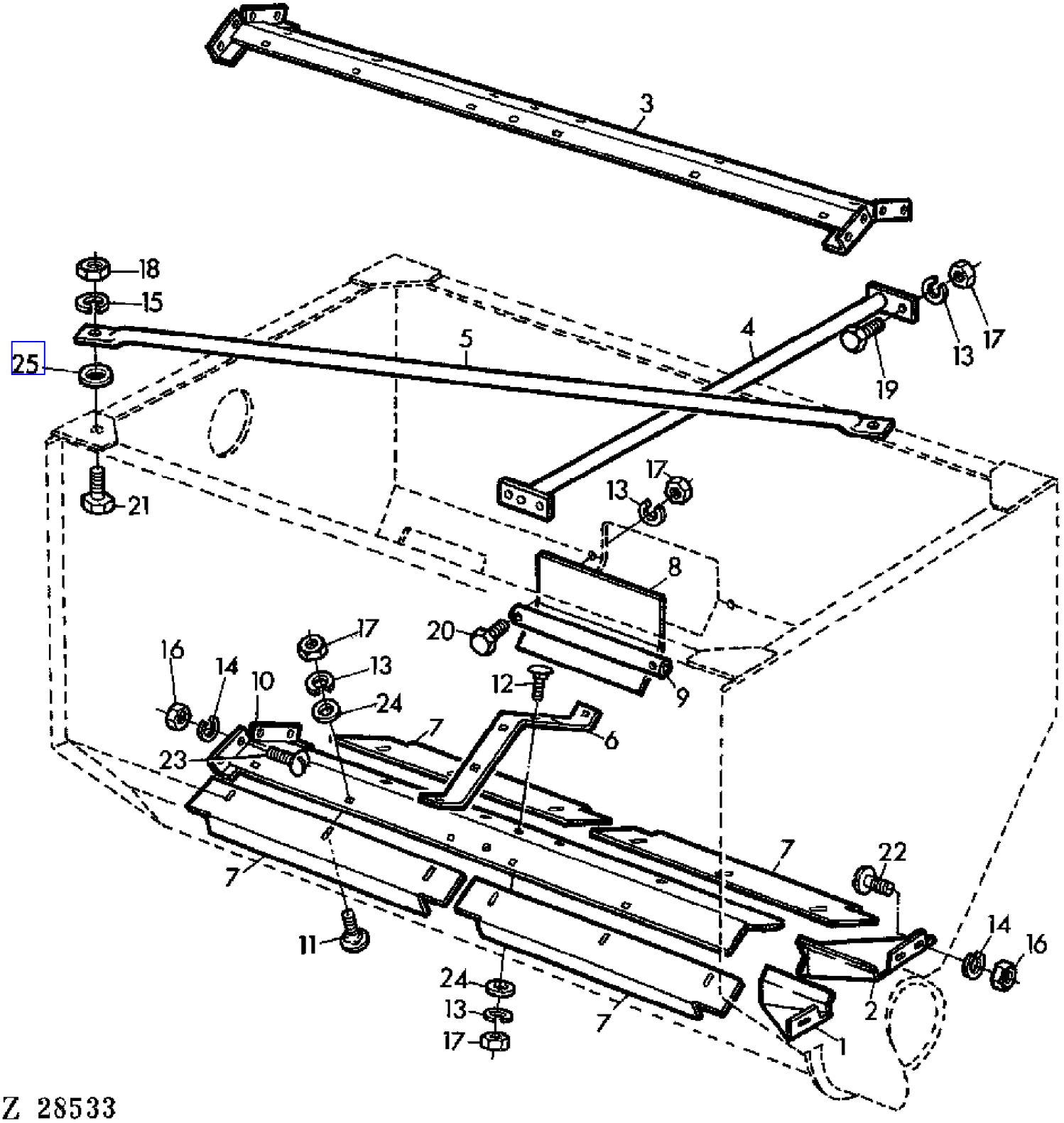

COPYRIGHT©1994 - 2008 DEERE & COMPANY Moline, Illinois All rights reserved

(PC4146) 955 Combine

(4E16) GRAIN TANK
TREMIE
KORNTANK
SERBATOIO GRANO
TANQUE DE GRANO
SPANNMALSTANK

KEY	PART NO.	PART NAME	QTY	SERIAL NO.	955	REMARKS
1	AZ16375	COVER	1		X	
2	AZ16376	COVER	1		X	
3	AZ18996	COVER	AR		X	(A)
4	AZ20608	BRACE	1		X	
5	Z21075	BRACE	1		X	
6	Z21080	HOLDER	1		X	
7	Z22046	ADJUSTER	4		X	
8	Z25585	COVER	1		X	
9	Z25586	HOLDER	1		X	
10	Z31645	COVER	1		X	
11	03M7090	BOLT	12		X	M8X15
12	03M7054	BOLT	11		X	M8X20
13	12M7008	LOCK WASHER	29		X	8MM
14	12M7012	LOCK WASHER	8		X	6MM
15	12M7013	LOCK WASHER	4		X	10MM
16	14M7027	NUT	8		X	M6
17	14M7029	NUT	29		X	M8
18	14M7140	NUT	4		X	M10
19	19M7162	CAP SCREW	4		X	M8X15
20	19M7163	CAP SCREW	2		X	M8X25
21	19M7167	CAP SCREW	4		X	M10X25
22	21M7031	SCREW	4		X	M6X12
23	21M7127	SCREW	4		X	M6X18
24	24M7036	WASHER	11		X	9MM
25	24M7040	WASHER	AR		X	11MM

(A) ONLY FOR MAIZE-COB MIX
UNIQUEMENT MELANGE RAFLES-GRAINS
NUR FUER KOERNER-SPINDEL-GEMISCH
SOLTANTO,PER MISCUGLIO DI GRANO TURCO IN GRANI
SOLAMENTE PARA MEZCLA DE GRANOS Y MAZORCAS
ENDAST FOR MAJSBLANDNING

COPYRIGHT©1994 - 2008 DEERE & COMPANY Moline, Illinois All rights reserved

(4E22) GRAIN TANK COVER
COUVERCLE DE TREMIE
KORNTANKABDECKUNG
COPERCHIO DEL SERBATOIO GRANO
COBERTERA DEL TANQUE DE GRANO
SPANNMALSTANKENS LOCK

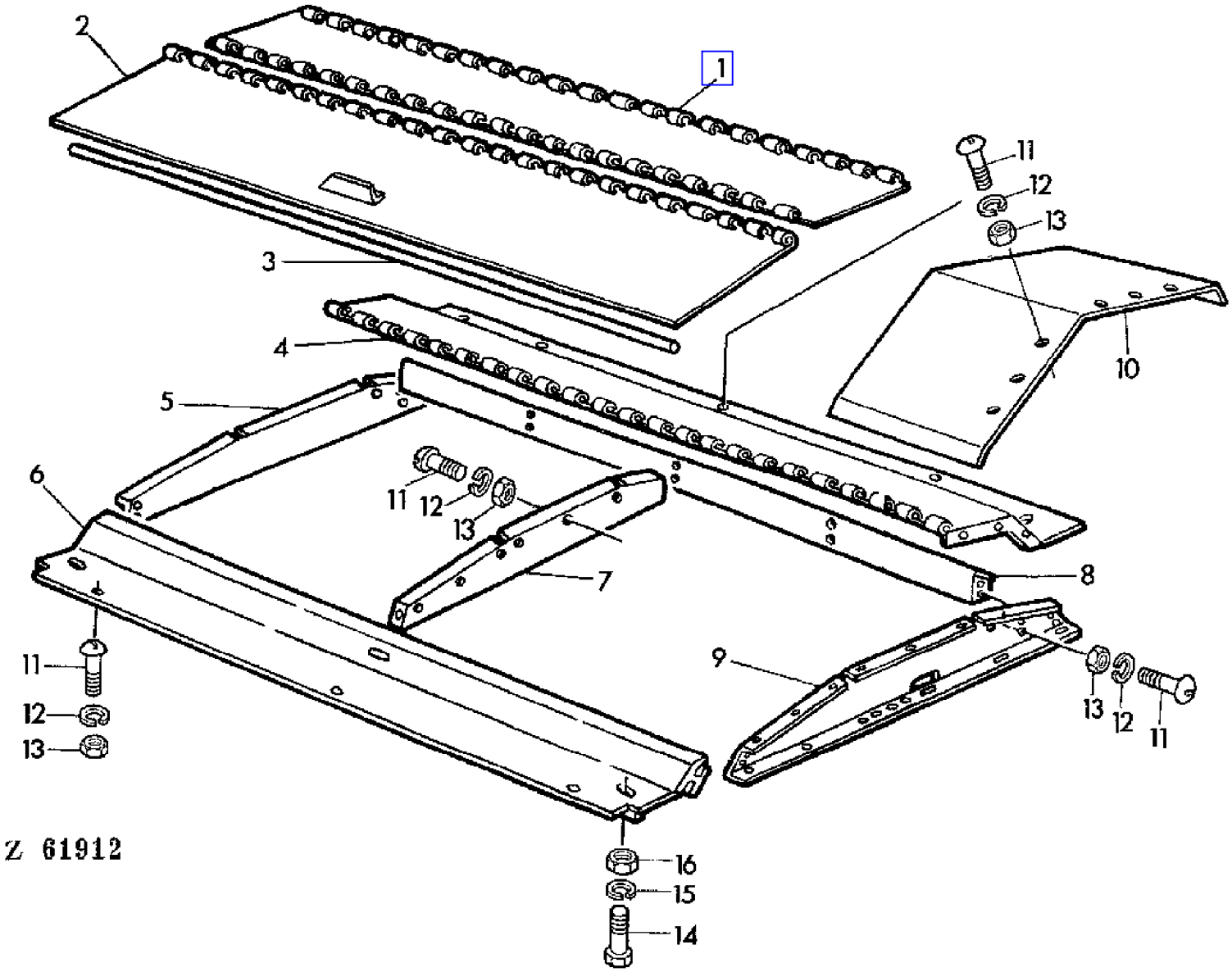

COPYRIGHT©1994 - 2008 DEERE & COMPANY Moline, Illinois All rights reserved

(4E22) GRAIN TANK COVER
COUVERCLE DE TREMIE
KORNTANKABDECKUNG
COPERCHIO DEL SERBATOIO GRANO
COBERTERA DEL TANQUE DE GRANO
SPANNMALSTANKENS LOCK

KEY	PART NO.	PART NAME	QTY	SERIAL NO.	955	REMARKS
1	Z23320	COVER	1	- 018097	X	REAR, UP
2	AZ13131	COVER	1	- 018097	X	FRONT, UP
3	Z23321	ROD	2	- 018097	X	
4	AZ13130	COVER	1	- 018097	X	
5	Z23812	RIB	1	- 018097	X	RH
6	Z23815	FRAME	1	- 018097	X	FRONT
7	Z23316	RIB	3	- 018097	X	
8	Z23814	FRAME	1	- 018097	X	
9	Z23813	RIB	1	- 018097	X	LH
10	Z23319	COVER	1	- 018097	X	LH, UP
11	21M7088	SCREW	56		X	M6X12
12	12M7012	LOCK WASHER	56		X	6MM
13	14M7027	NUT	56		X	M6
14	19M7166	CAP SCREW	3		X	M10X20
15	12M7013	LOCK WASHER	3		X	10MM
16	14M7140	NUT	3		X	M10

COPYRIGHT©1994 - 2008 DEERE & COMPANY Moline, Illinois All rights reserved

(4E24) GRAIN TANK COVER
COUVERCLE DE TREMIE
KORNTANKABDECKUNG
COPERCHIO DEL SERBATOIO GRANO
COBERTERA DEL TANQUE DE GRANO
SPANNMALSTANKENS LOCK

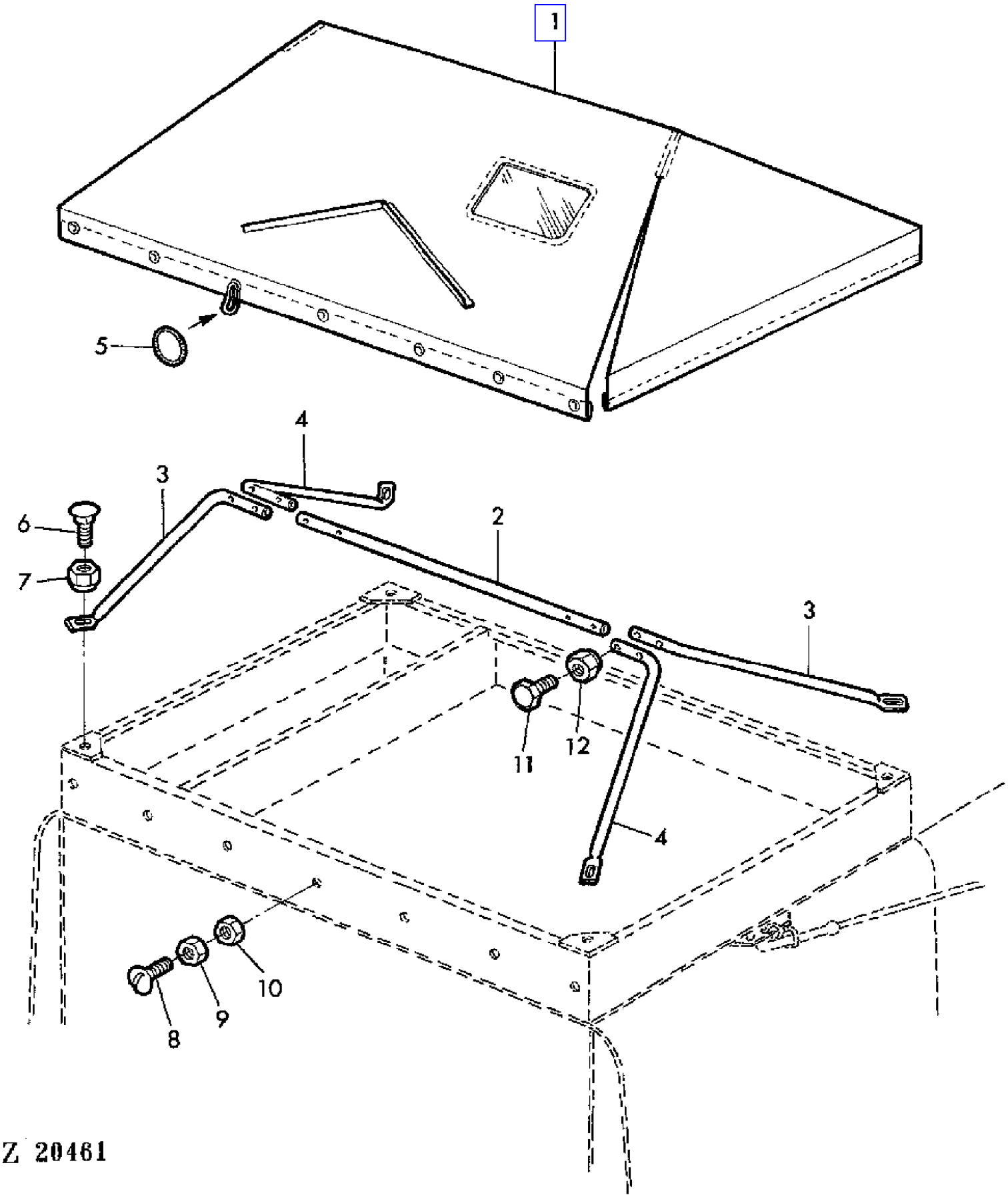

COPYRIGHT©1994 - 2008 DEERE & COMPANY Moline, Illinois All rights reserved

(4E24) GRAIN TANK COVER
COUVERCLE DE TREMIE
KORNTANKABDECKUNG
COPERCHIO DEL SERBATOIO GRANO
COBERTERA DEL TANQUE DE GRANO
SPANNMALSTANKENS LOCK

KEY	PART NO.	PART NAME	QTY	SERIAL NO.		955	REMARKS
1	AZ27157	COVER	1	018098	-	X	INCL KEY 5
2	Z38097	PIPE	1	018098	-	X	
3	Z38098	PIPE	2	018098	-	X	
4	Z38099	PIPE	2	018098	-	X	
5	Z34842	RING	14	018098	-	X	
6	21M7090	SCREW	4			X	M10X25
7	14M7167	LOCK NUT	4			X	M10
8	21M7096	BOLT	14			X	M8X25
9	14M7151	NUT	14			X	M8
10	14M7029	NUT	14			X	M8
11	19M6699	CAP SCREW	4			X	M6X70
12	14M7165	LOCK NUT	4			X	M6

COPYRIGHT©1994 - 2008 DEERE & COMPANY Moline, Illinois All rights reserved

(4E20) GRAIN TANK EXTENSION
REHAUSSE DE TREMIE
KORNTANKAUFSATZ
ESTENSIONE DEL SERBATOIO GRANO
EXTENSION DEL TANQUE DE GRANO
SPANNMALSTANKENS FORHOJNING

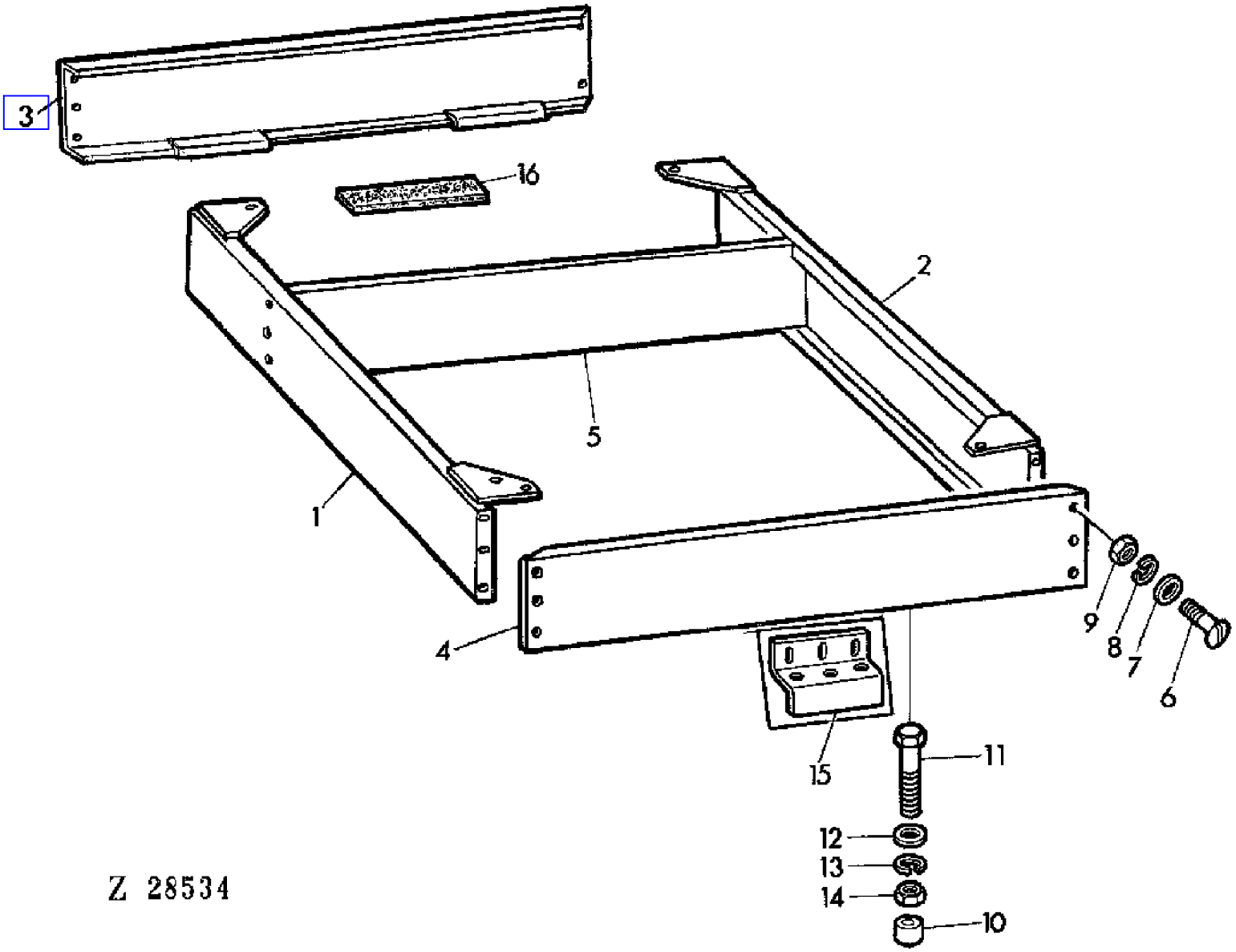

COPYRIGHT©1994 - 2008 DEERE & COMPANY Moline, Illinois All rights reserved

(4E20) GRAIN TANK EXTENSION
REHAUSSE DE TREMIE
KORNTANKAUFSATZ
ESTENSIONE DEL SERBATOIO GRANO
EXTENSION DEL TANQUE DE GRANO
SPANNMALSTANKENS FORHOJNING

KEY	PART NO.	PART NAME	QTY	SERIAL NO.	955	REMARKS
1	AZ14910	EXTENSION	1		X	FRONT, LGTH = 2191 MM 86.26"
2	AZ14909	EXTENSION	1		X	REAR, LGTH = 2191 MM 86.26"
3	AZ14911	SIDE WALL	1		X	RH
4	AZ28683	SIDE WALL	1		X	LH (SUB FOR AZ21580)
5	Z25913	PARTITION	1		X	
6	21M7087	SCREW	28		X	M6X12
7	24M7088	WASHER	28		X	6,6MM
8	12M7012	LOCK WASHER	28		X	6MM
9	14M7027	NUT	28		X	M6
10	Z25919	BUSHING	2		X	
11	19M7269	CAP SCREW	2		X	M8X50
12	24M7036	WASHER	2		X	9MM
13	12M7008	LOCK WASHER	2		X	8MM
14	14M7029	NUT	2		X	M8
15	Z32421	REINFORCEMENT	1		X	
16	Z20768	GASKET	1		X	

COPYRIGHT©1994 - 2008 DEERE & COMPANY Moline, Illinois All rights reserved

(4E18) GRAIN TANK LEVELING AUGER WITH HOUSING
VIS EGALISATRICE DE TREMIE ET CARTER
KORNTANK-VERTEILERSCHNECKE MIT GEHAEUSE
COCLEA LIVELLAMENTO SERBATOIO GRANO E SCATOLA
SINFIN DISTRIBUIDOR DEL TANQUE DE GRANO CON CARCASA
SPANNMALSTANKENS MATNINGSSKRUV OCH HUS

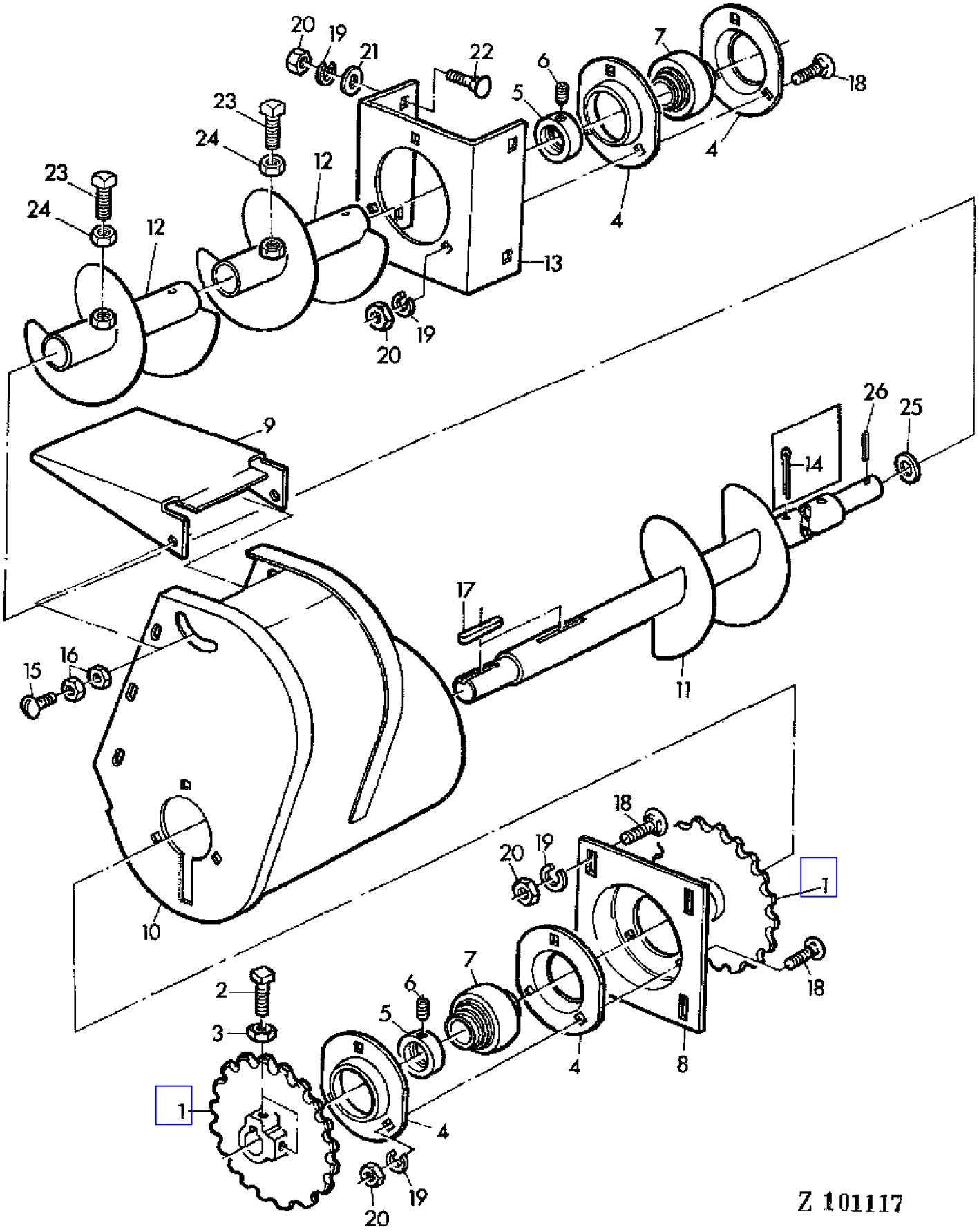

COPYRIGHT©1994 - 2008 DEERE & COMPANY Moline, Illinois All rights reserved

(4E18) GRAIN TANK LEVELING AUGER WITH HOUSING
VIS EGALISATRICE DE TREMIE ET CARTER
KORNTANK-VERTEILERSCHNECKE MIT GEHAEUSE
COCLEA LIVELLAMENTO SERBATOIO GRANO E SCATOLA
SINFIN DISTRIBUIDOR DEL TANQUE DE GRANO CON CARCASA
SPANNMALSTANKENS MATNINGSSKRUV OCH HUS

KEY	PART NO.	PART NAME	QTY	SERIAL NO.		955	REMARKS
1	Z10117	CHAIN SPROCKET	2			X	Z = 16
2	Z26249	SET SCREW	2			X	10X22MM
3	14M7152	NUT	2			X	M10
4	P47232	PRESSED FLANGED HOUSING	4			X	
5	AZ10044	ECCENTRIC LOCKING COLLAR	2			X	ASSY, INCL KEY 6
6	AZ19843	SET SCREW	2			X	KIT
7	JD39105	BALL BEARING	2			X	
8	Z20760	BRACKET	1			X	RH
9	Z20695	COVER	1			X	
10	AZ10348	HOUSING	1			X	
11	AZ27035	AUGER	1		- 024941	X	(SUB FOR AZ20944)
	AZ25712	AUGER	1	024942	-	X	
12	AZ31512	FLIGHT	3			X	(SUB FOR AZ10353, AZ28895)
13	Z20763	BRACKET	1			X	LH
14	11M7032	COTTER PIN	3		- 024941	X	5X55MM
15	21M7031	SCREW	2			X	M6X15
16	14M7027	NUT	4			X	M6
17	49M4108	SHAFT KEY	2			X	8X7X32MM
18	03M7054	BOLT	10			X	M8X20
19	12M7008	LOCK WASHER	14			X	8MM
20	14M7029	NUT	14			X	M8
21	24M7036	WASHER	4			X	9MM
22	03M7090	BOLT	4			X	M8X15
23	Z32433	SET SCREW	AR	024942	-	X	
24	14M7152	NUT	AR	024942	-	X	M10
25	Z24651	WASHER	AR			X	(SUB FOR L19223)
26	34M7041	SPRING PIN	1			X	6X36MM

COPYRIGHT©1994 - 2008 DEERE & COMPANY Moline, Illinois All rights reserved

(PC4146) 955 Combine

(2F10) GUARDS,LEFT-HAND
GARANTS GAUCHES
SCHUTZE,LINKS
DIFESE SINISTRI
CORAZAS DEL LADO IZQUIERDO
VANSTER SKYDDOR

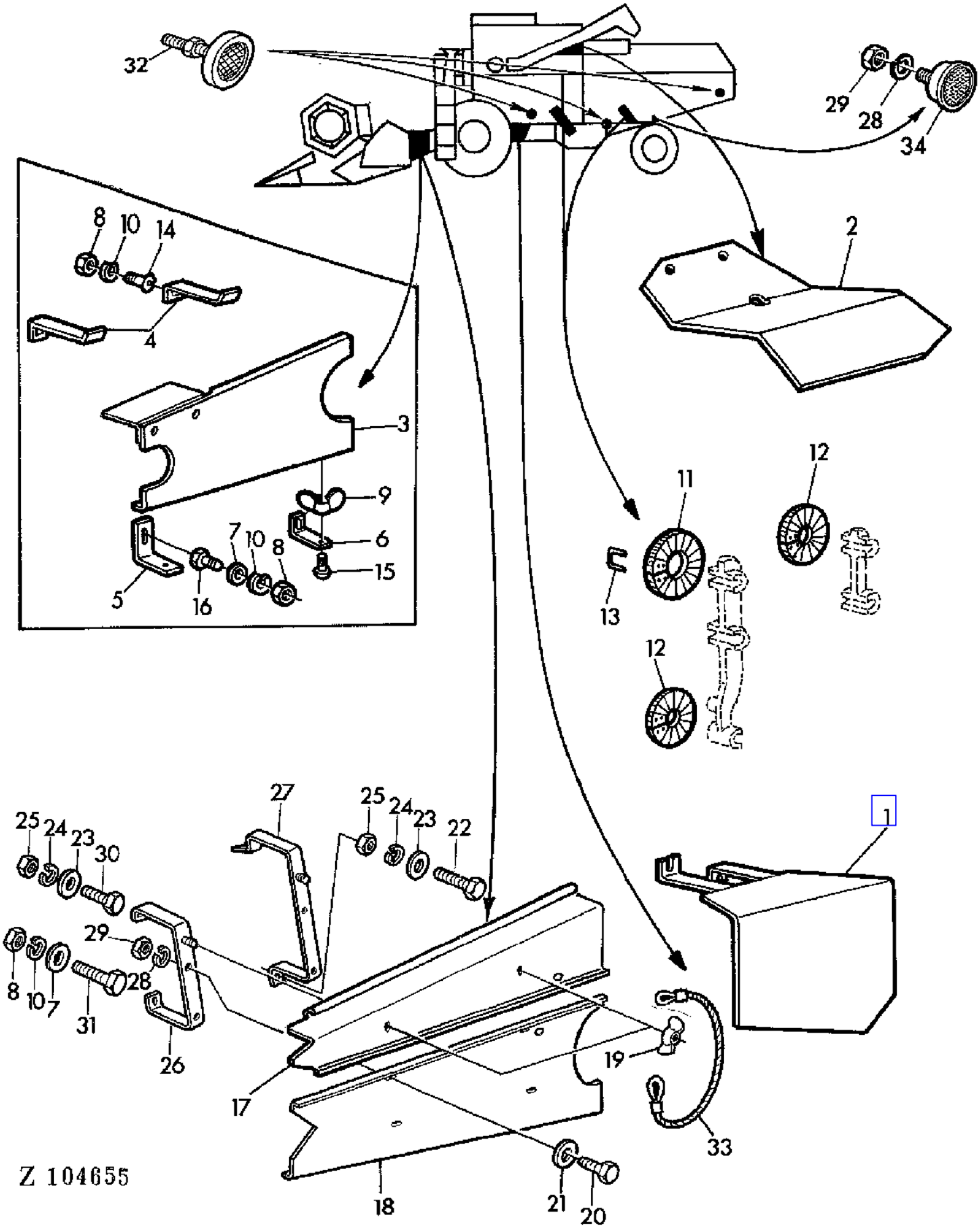

COPYRIGHT©1994 - 2008 DEERE & COMPANY Moline, Illinois All rights reserved

(2F10) GUARDS,LEFT-HAND
GARANTS GAUCHES
SCHUTZE,LINKS
DIFESE SINISTRI
CORAZAS DEL LADO IZQUIERDO
VANSTER SKYDDOR

KEY	PART NO.	PART NAME	QTY	SERIAL NO.			955	REMARKS
1	AZ13382	GUARD	1				X	
2	Z27194	GUARD	1				X	
3	AZ22400	GUARD	1		-	006195	X	(A)
	AZ32111	SHIELD	1		-	006195	X	(B) (SUB FOR AZ22399)
4	Z30542	ANGLE	2		-	006195	X	
5	Z30540	ANGLE	1		-	006195	X	
6	Z30541	ANGLE	1		-	006195	X	
7	24M7040	WASHER	3				X	11MM
8	14M7140	NUT	5				X	M10
9	14M7025	WING NUT	1				X	M10
10	12M7013	LOCK WASHER	5				X	M10
11	Z22622	GUARD	2				X	
12	Z22621	GUARD	4				X	
13	Z91612	NAIL	AR				X	(SUB FOR Z90003)
14	03M7017	BOLT	2				X	M10X25
15	03M7084	BOLT	2				X	M10X25
16	19M7168	CAP SCREW	2				X	M10X30
17	Z43582	GUARD	1	006196	-		X	(SUB FOR Z35917, Z37862)
18	Z35927	GUARD	1	006196	-		X	
19	Z20285	WING NUT	2	006196	-		X	
20	19M7159	CAP SCREW	4				X	M6X16
21	Z26250	WASHER	4	006196	-		X	7MM
22	19M7163	CAP SCREW	2				X	M8X25
23	24M7036	WASHER	3				X	9MM
24	12M7008	LOCK WASHER	3				X	8MM
25	14M7029	NUT	3				X	M8
26	AZ24892	HOLDER	1	006196	-		X	
27	AZ24926	HOLDER	1	006196	-		X	
28	12M7012	LOCK WASHER	AR				X	6MM
29	14M7027	NUT	AR				X	M6
30	19M7139	CAP SCREW	1				X	M8X20
31	19M7167	CAP SCREW	1				X	M10X25
32	AL26674	REFLECTOR	4				X	AR
33	AZ26782	CABLE	1				X	
34	L39871	REFLECTOR	2				X	INCL KEYS 28,29 (SUB FOR 99M6488)

(A) FOR SHORT FEEDER CONVEYOR
POUR CONVOYEUR D'ALIMENTATION COURT
FUER SCHRAEGFOERDERER KURZ
PER CONVOGLIATORE CORTO
PARA ELEVADOR DE MIES CORTO
FOR INMATNINGSELEVATOR,KORT

(B) FOR LONG FEEDER CONVEYOR
POUR CONVOYEUR D'ALIMENTATION LONG
FUER SCHRAEGFOERDERER LANG
PER CONVOGLIATORE LUNGO
PARA ELEVADOR DE MIES LARGO
FOR INMATNINGSELEVATOR,LANG

COPYRIGHT©1994 - 2008 DEERE & COMPANY Moline, Illinois All rights reserved

(PC4146) 955 Combine

(2F12) GUARDS,LEFT-HAND
GARANTS GAUCHES
SCHUTZE,LINKS
DIFESE SINISTRI
CORAZAS DEL LADO IZQUIERDO
VANSTER SKYDDOR

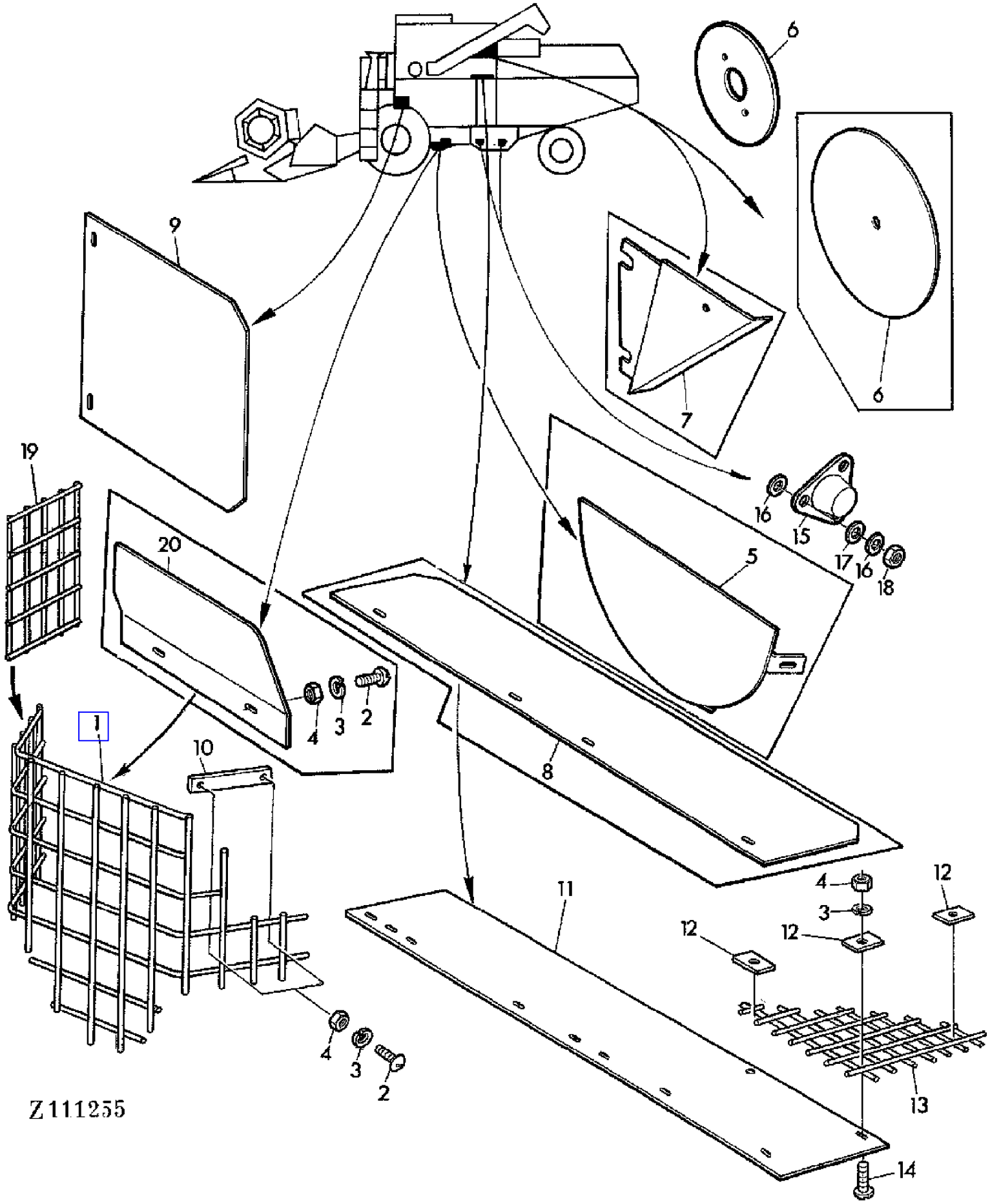

COPYRIGHT©1994 - 2008 DEERE & COMPANY Moline, Illinois All rights reserved

(2F12) GUARDS,LEFT-HAND
GARANTS GAUCHES
SCHUTZE,LINKS
DIFESE SINISTRI
CORAZAS DEL LADO IZQUIERDO
VANSTER SKYDDOR

KEY	PART NO.	PART NAME	QTY	SERIAL NO.		955	REMARKS
1	AZ22458	GUARD	1			X	
2	21M7087	SCREW	4			X	M6X12
3	12M7012	LOCK WASHER	4			X	6MM
4	14M7027	NUT	4			X	M6
5	AZ22461	GUARD	1		- 006195	X	
6	Z25857	WASHER	1		- 015777	X	
	Z37950	COVER	1	015778	-	X	
7	Z33715	GUARD	1		- 006195	X	
8	Z33712	GUARD	1		- 006195	X	
9	Z35539	GUARD	1			X	
10	Z33255	STRAP	AR			X	
11	Z35922	GUARD	1	006196	-	X	
12	Z23754	STRAP	3	006196	-	X	
13	AZ24893	GRILLE	1	006196	-	X	
14	21M7031	SCREW	AR			X	M6X15
15	Z38381	GUARD	2			X	(SUB FOR Z24113, Z36139)
16	24M7056	WASHER	AR			X	10,5MM
17	Z36140	WASHER	AR			X	
18	14M7152	NUT	AR			X	M8
19	Z44635	GRATE	1			X	
20	Z33259	GUARD	1			X	(ORD Z44635)

COPYRIGHT©1994 - 2008 DEERE & COMPANY Moline, Illinois All rights reserved

(PC4146) 955 Combine

(2G22) GUARDS,LEFT-HAND
GARANTS GAUCHES
SCHUTZE,LINKS
DIFESE SINISTRI
CORAZAS DEL LADO IZQUIERDO
VANSTER SKYDDOR

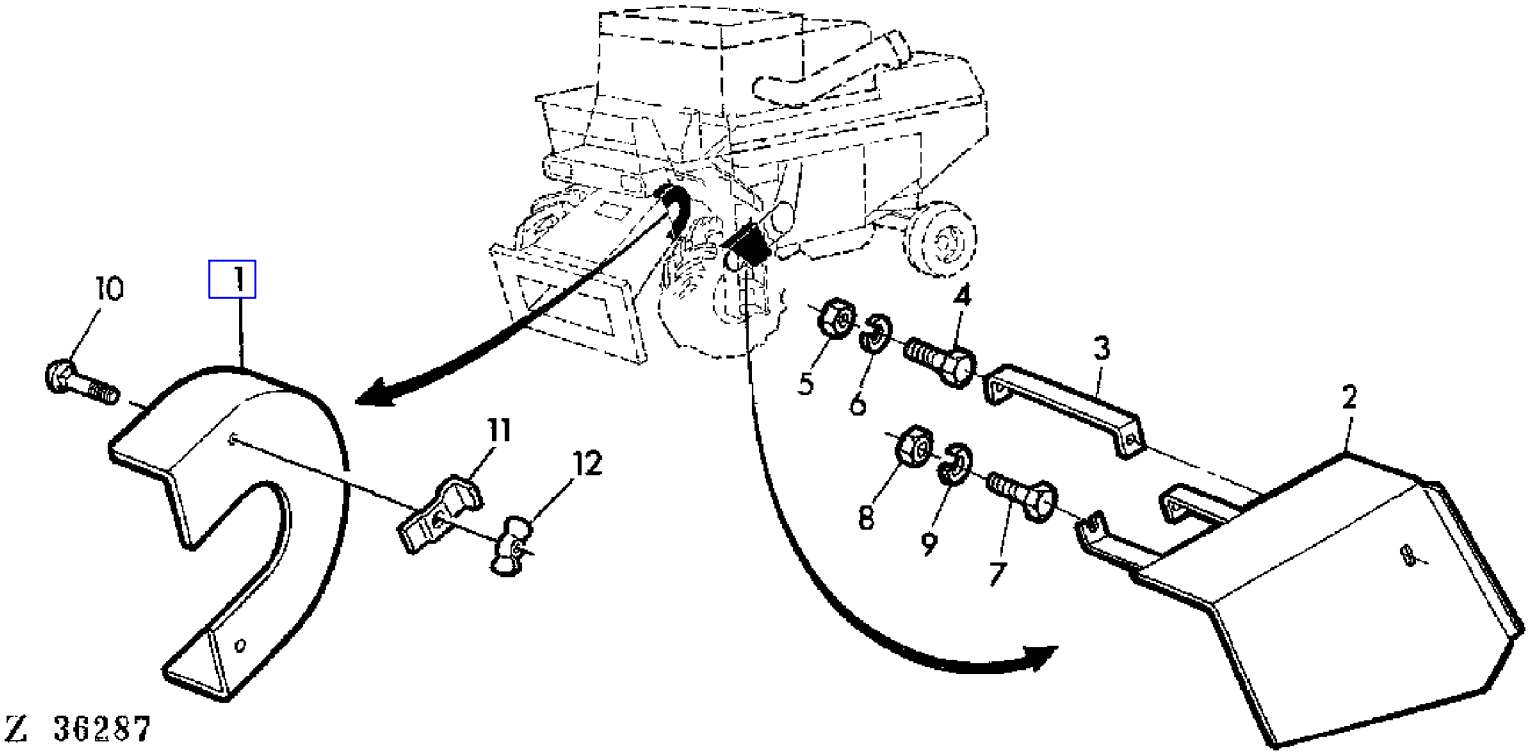

COPYRIGHT©1994 - 2008 DEERE & COMPANY Moline, Illinois All rights reserved

(PC4146) 955 Combine

(2G22) GUARDS,LEFT-HAND
GARANTS GAUCHES
SCHUTZE,LINKS
DIFESE SINISTRI
CORAZAS DEL LADO IZQUIERDO
VANSTER SKYDDOR

KEY	PART NO.	PART NAME	QTY	SERIAL NO.	955	REMARKS
1	Z40268	GUARD	1		X	
2	AZ29880	GUARD	1		X	
3	Z40284	HOLDER	1		X	
4	19M7159	CAP SCREW	4		X	M6X16
5	14M7027	NUT	AR		X	M6
6	12M7012	LOCK WASHER	AR		X	6MM
7	19M7139	CAP SCREW	1		X	M8X20
8	14M7029	NUT	AR		X	M8
9	12M7008	LOCK WASHER	AR		X	8MM
10	03M7054	BOLT	2		X	M8X20
11	Z20367	CLAMP	2		X	
12	14M7020	WING NUT	2		X	M8

COPYRIGHT©1994 - 2008 DEERE & COMPANY Moline, Illinois All rights reserved

(PC4146) 955 Combine

(2F14) GUARDS,RIGHT-HAND
GARANTS DROITS
SCHUTZE,RECHTS
DIFESE DESTRI
CORAZAS DEL LADO DERECHO
HOGER SKYDDOR

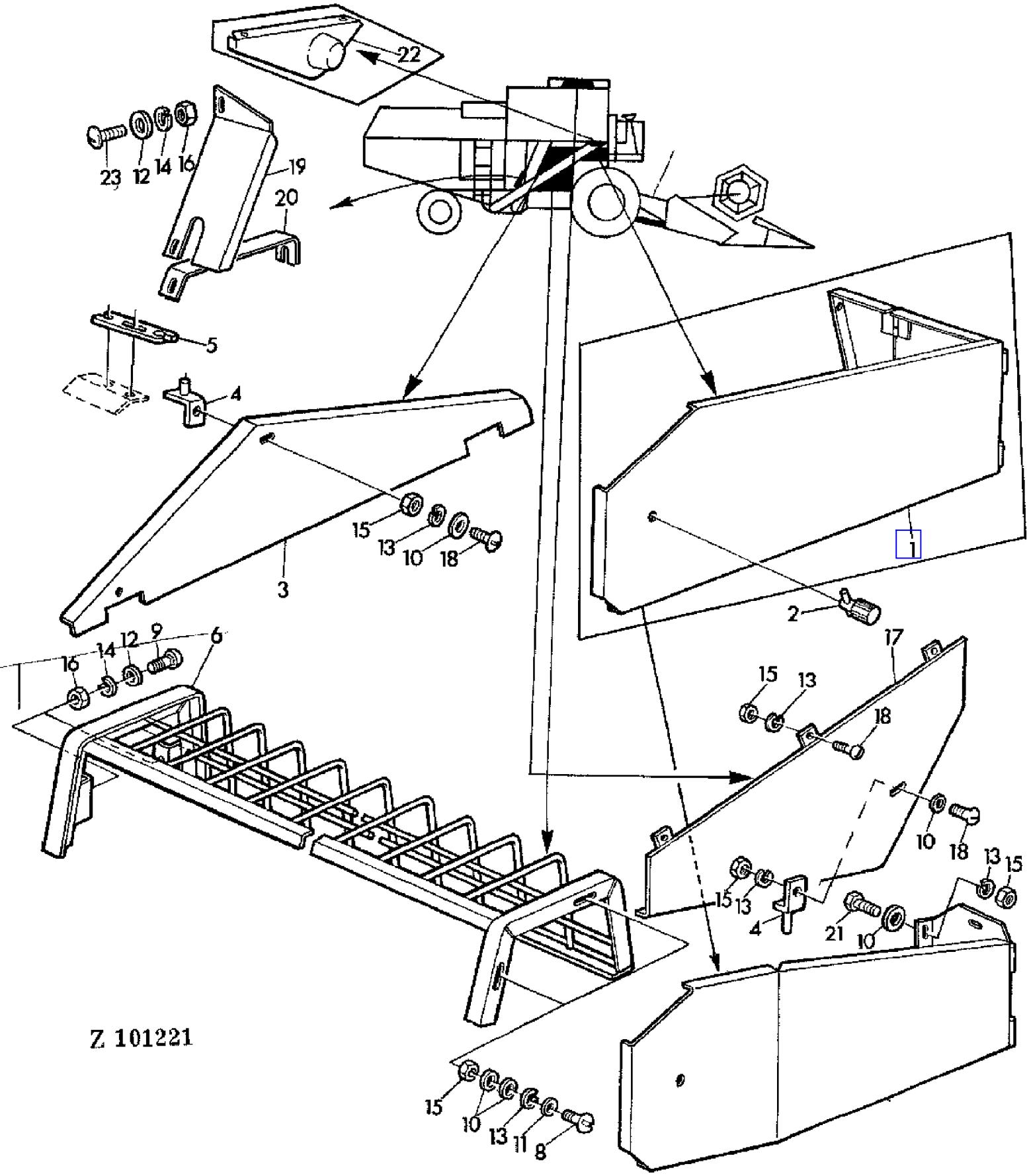

COPYRIGHT©1994 - 2008 DEERE & COMPANY Moline, Illinois All rights reserved

(2F14) GUARDS,RIGHT-HAND
GARANTS DROITS
SCHUTZE,RECHTS
DIFESE DESTRI
CORAZAS DEL LADO DERECHO
HOGER SKYDDOR

KEY	PART NO.	PART NAME	QTY	SERIAL NO.			955	REMARKS
1	AZ21366	GUARD	1		-	006195	X	
2	AZ21124	LATCH	1				X	
3	Z32019	GUARD	1				X	
4	AZ13950	HOLDER	1				X	
5	Z24277	HOLDER	1				X	
6	AZ21687	GUARD	1				X	LGTH = 1705 MM 67.13"
7	AZ25750	GUARD	1	006196	-		X	(SUB FOR AZ24927)
8	21M7085	SCREW	2				X	M6X20
9	03M7093	BOLT	2				X	M8X25
10	Z26250	WASHER	9				X	6,5MM
11	24M7088	WASHER	2				X	6,6MM
12	24M7036	WASHER	4				X	9MM
13	12M7012	LOCK WASHER	10				X	6MM
14	12M7008	LOCK WASHER	4				X	8MM
15	14M7027	NUT	10				X	M6
16	14M7029	NUT	4				X	M8
17	AZ15288	GUARD	1				X	
18	03M7068	BOLT	4				X	M6X20
19	Z35921	GUARD	1	006196	-		X	
20	Z35909	RETAINER	1	006196	-		X	
21	19M7159	CAP SCREW	3				X	M6X16
22	Z27393	GUARD	1		-	003200	X	
23	21M7089	SCREW	2	006196	-		X	M8X20

COPYRIGHT©1994 - 2008 DEERE & COMPANY Moline, Illinois All rights reserved

(PC4146) 955 Combine

(2F16) GUARDS,RIGHT-HAND
GARANTS DROITS
SCHUTZE,RECHTS
DIFESE DESTRI
CORAZAS DEL LADO DERECHO
HOGER SKYDDOR

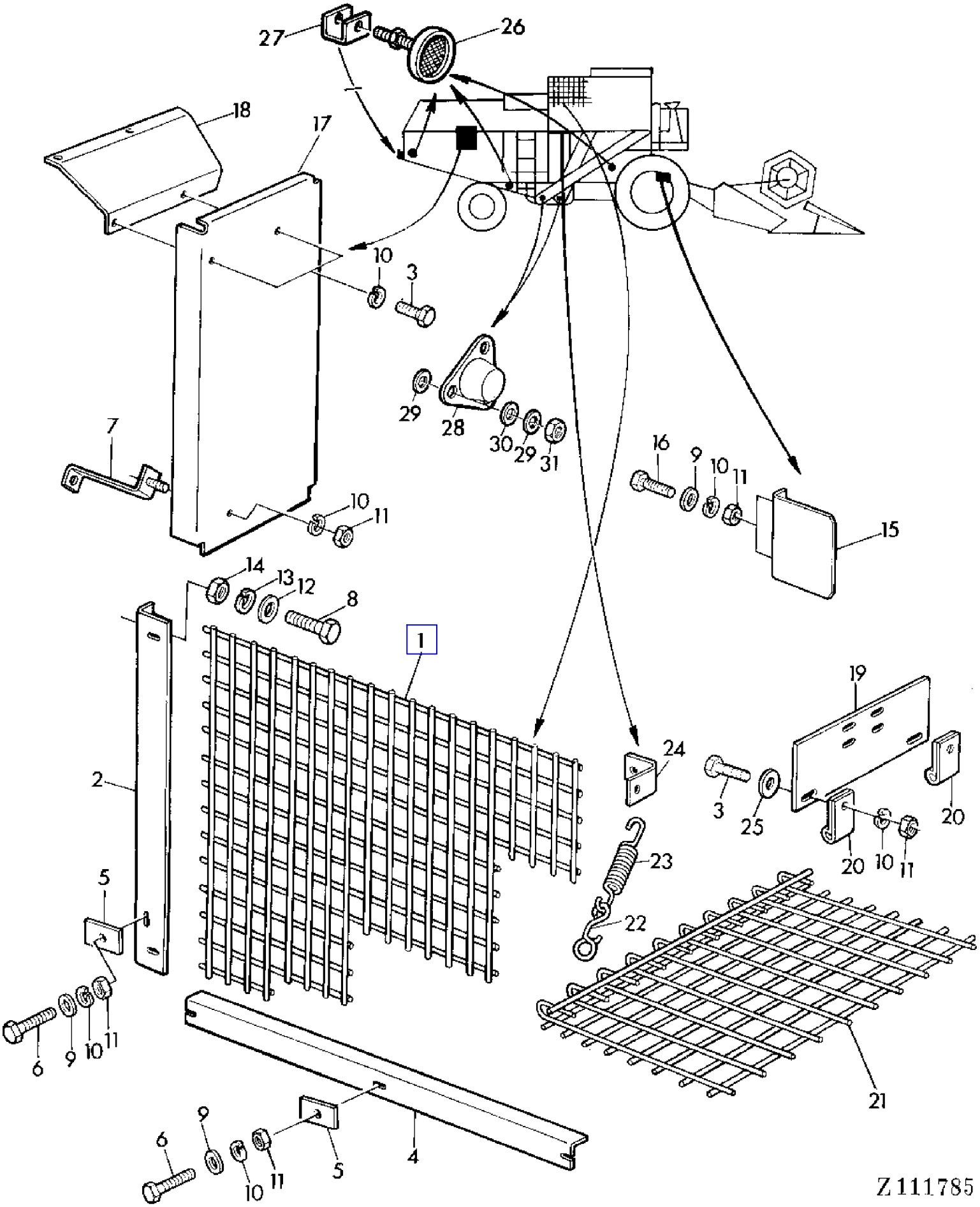

COPYRIGHT©1994 - 2008 DEERE & COMPANY Moline, Illinois All rights reserved

(PC4146) 955 Combine

(2F16) GUARDS,RIGHT-HAND
GARANTS DROITS
SCHUTZE,RECHTS
DIFESE DESTRI
CORAZAS DEL LADO DERECHO
HOGER SKYDDOR

KEY	PART NO.	PART NAME	QTY	SERIAL NO.			955	REMARKS
1	AZ22391	GRILLE	1		-	006195	X	
	AZ24902	GRILLE	1	006196	-	015777	X	
2	Z33200	ANGLE	1		-	015777	X	
3	19M7159	CAP SCREW	4				X	M6X15
4	Z33203	ANGLE	1		-	015777	X	
5	Z23754	STRAP	4		-	015777	X	
6	19M7077	CAP SCREW	6				X	M6X20
7	AZ24947	HOLDER	1				X	(SUB FOR Z32773)
8	19M7139	CAP SCREW	2				X	M8X20
9	24M7088	WASHER	14				X	6,6MM
10	12M7012	LOCK WASHER	16				X	6MM
11	14M7027	NUT	16				X	M6
12	24M7036	WASHER	2				X	9MM
13	12M7008	LOCK WASHER	2				X	8MM
14	14M7029	NUT	2				X	M8
15	Z33187	GUARD	1		-	006195	X	
16	19M7375	CAP SCREW	2				X	M6X18
17	Z32884	GUARD	1				X	
18	Z34134	GUARD	1		-	006195	X	
	AZ24948	GUARD	1	006196	-		X	
19	Z35942	PLATE	1	006196	-		X	
20	Z35976	CLAMP	2	006196	-		X	
21	AZ24903	GRILLE	1	006196	-		X	
22	Z32078	HOLDER	1	006196	-		X	
23	Z21613	EXTENSION SPRING	1	006196	-		X	
24	Z24128	ANGLE	1	006196	-		X	
25	Z26250	WASHER	2	006196	-		X	
26	AL26674	REFLECTOR	4				X	AR
27	Z41565	CLEVIS	1				X	
28	Z38381	GUARD	2				X	
29	24M7056	WASHER	AR				X	10,5MM
30	Z36140	WASHER	AR				X	
31	14M7152	NUT	AR				X	M8

COPYRIGHT©1994 - 2008 DEERE & COMPANY Moline, Illinois All rights reserved

(3E18) HAND RAILS-OPERATOR'S PLATFORM
GARDE-CORPS-PLATE-FORME DE CONDUITE
GELAENDER-FAHRERPLATTFORM
PASSAMANI DELLA PIATTAFORMA DI CONDUZIONE
PASAMANOS DE LA PLATAFORMA DE CONDUCCION
RACKE FOR FORARPLATTFORM

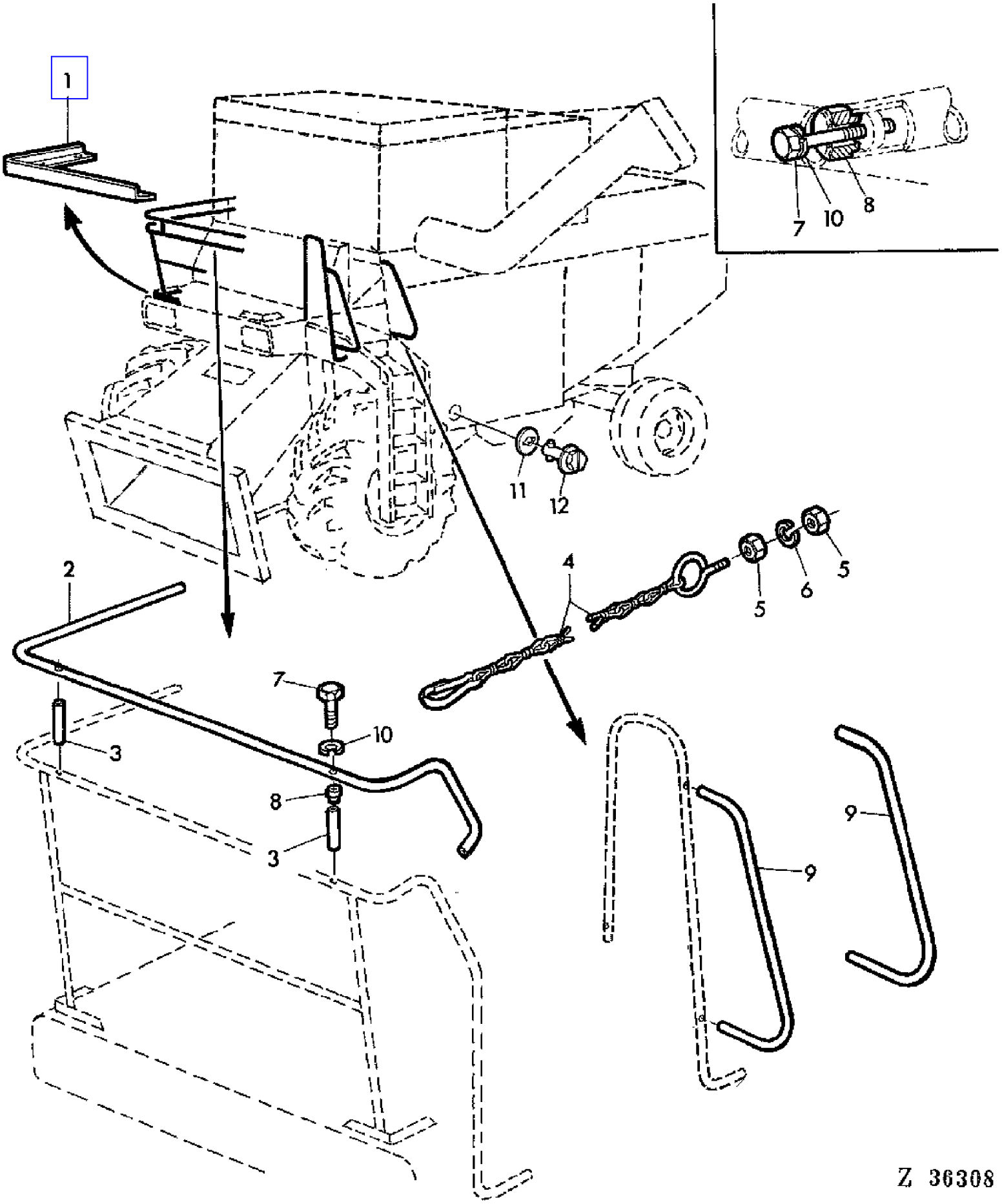

COPYRIGHT©1994 - 2008 DEERE & COMPANY Moline, Illinois All rights reserved

(3E18) HAND RAILS-OPERATOR'S PLATFORM
GARDE-CORPS-PLATE-FORME DE CONDUITE
GELAENDER-FAHRERPLATTFORM
PASSAMANI DELLA PIATTAFORMA DI CONDUZIONE
PASAMANOS DE LA PLATAFORMA DE CONDUCCION
RACKE FOR FORARPLATTFORM

KEY	PART NO.	PART NAME	QTY	SERIAL NO.	955	REMARKS
1	Z40279	SHIELD	1		X	LH
	Z40278	SHIELD	1		X	RH
2	AZ21768	HANDRAIL	1		X	
3	AZ21762	ROD	2		X	
4	AZ29878	LINK CHAIN	1		X	
5	14M7027	NUT	AR		X	M6
6	12M7012	LOCK WASHER	AR		X	6MM
7	19M7185	CAP SCREW	AR		X	M8X60
8	Z29723	SLEEVE	AR		X	
9	AZ29881	HANDRAIL	2		X	
10	12M7008	LOCK WASHER	AR		X	8MM
11	Z34136	WASHER	AR		X	
12	AZ26107	LATCH	AR		X	

COPYRIGHT©1994 - 2008 DEERE & COMPANY Moline, Illinois All rights reserved

(3A15) HANDRAIL
MAIN COURANTE
GELAENDER
RINGHIERA
PASAMANO
VANSTER MANOVERSPAKSHUS OCH BAKSPEGEL

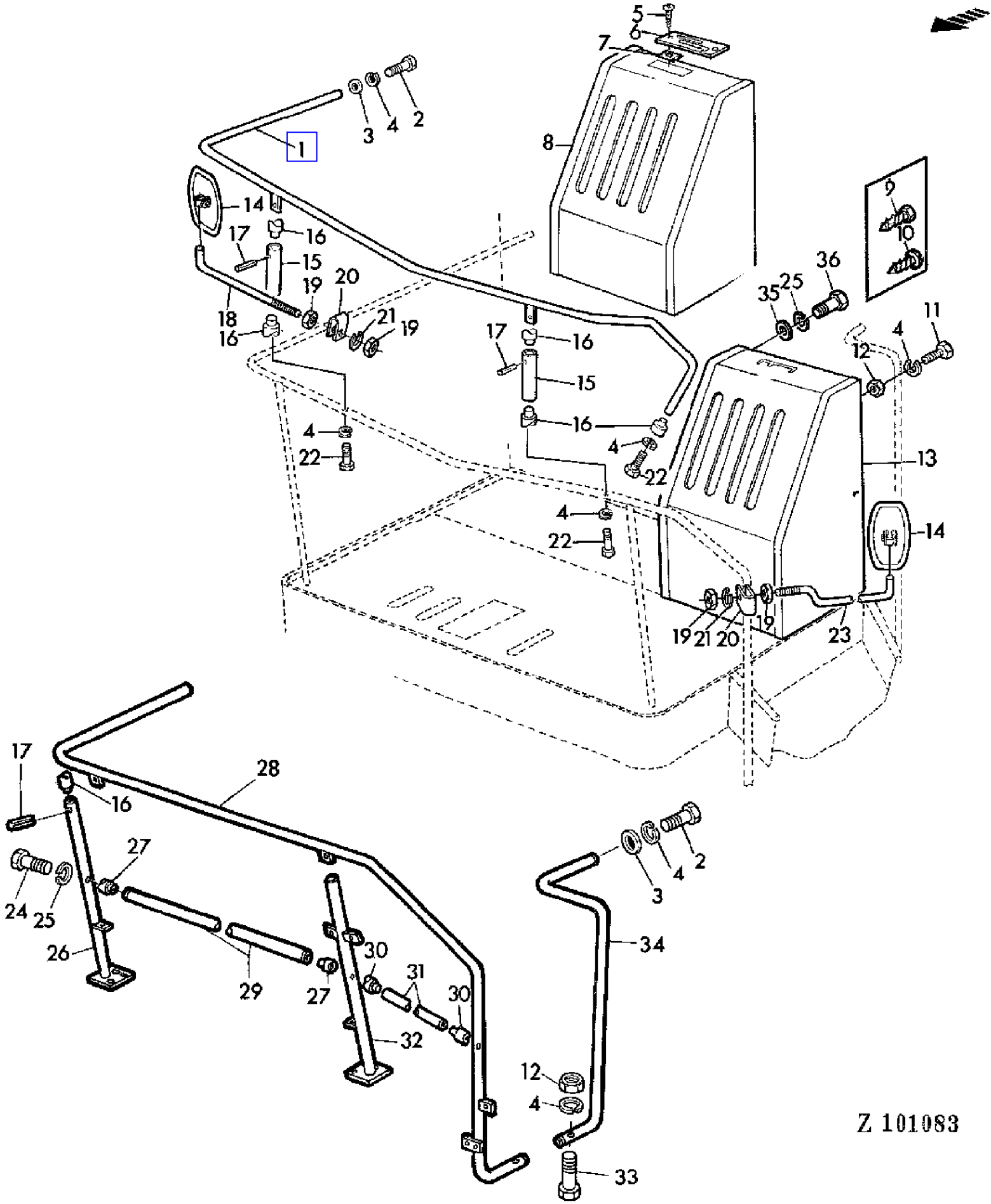

COPYRIGHT©1994 - 2008 DEERE & COMPANY Moline, Illinois All rights reserved

(3A15) HANDRAIL
MAIN COURANTE
GELAENDER
RINGHIERA
PASAMANO
VANSTER MANOVERSPAKSHUS OCH BAKSPEGEL

KEY	PART NO.	PART NAME	QTY	SERIAL NO.	955	REMARKS
1	AZ21768	HANDRAIL	1		X	
2	19M7163	CAP SCREW	AR		X	M8X25
3	24M7024	WASHER	AR		X	8MM
4	12M7008	LOCK WASHER	AR		X	8MM
5	37M7009	SCREW	2		X	(A) 5,5X19MM
6	Z23887	PLATE	1		X	(A)
7	Z21838	NUT	2		X	(A)
8	AZ21365	HOUSING	1		X	(A) LH
9	37M7057	SCREW	2		X	(A) 5,5X13MM
10	37M7029	SCREW	2		X	5,5X13MM
11	19M7139	CAP SCREW	2		X	M8X20
12	14M7029	NUT	AR		X	M8
13	AZ21642	HOUSING	1		X	LH
	AZ25462	HOUSING	1		X	(B)
14	AZ16499	REAR VIEW MIRROR	2		X	
15	AZ21762	ROD	2		X	
16	Z29723	SLEEVE	5		X	
17	34M7033	SPRING PIN	AR		X	5X30MM
18	Z31946	RETAINER	1		X	RH
19	14M7015	NUT	4		X	M12
20	Z27771	CLEVIS	2		X	
21	12M7014	LOCK WASHER	2		X	12MM
22	19M7185	CAP SCREW	3		X	M8X60
23	Z31945	HOLDER	1		X	LH
24	19M7319	SCREW	AR		X	M6X60
25	12M7012	LOCK WASHER	AR		X	6MM
26	AZ22693	SUPPORT	1		X	
27	Z32322	SPACER	2		X	
28	AZ23557	HANDRAIL	1		X	
29	AZ22392	ROD	1		X	
30	Z33194	SPACER	2		X	
31	Z33192	PIPE	1		X	
32	AZ22694	SUPPORT	1		X	
33	19M7295	CAP SCREW	2		X	M8X45
34	AZ10941	HANDRAIL	1		X	
35	24M7088	WASHER	AR		X	6,6MM
36	19M6614	CAP SCREW	AR		X	M6X12

(A) FOR TOP-SACKER ONLY
UNIQUEMENT ENSACHEUR SUPERIEUR
NUR FUER TOP-SACKER
SOLTANTO PER INSACCATORE SUPERIORE
SOLAMENTE PARA ENSACADOR SUPERIOR
ENDAST FOR SAECKNINGSPLATTFORM

(B) FOR HYDROSTATIC REEL DRIVE ONLY
UNIQUEMENT ENTR.HYDROST.DU RABATTEUR
NUR FUER HYDROSTATISCHEN HASPELANTRIEB
SOLTANTO PER COMANDO IDROST.DELL'ASPO
SOLAMENTE PARA ACCIONAMENTO HIDROSTATICO DEL
ENDAST FOR HYDROST.DRIVNING AV HASPELN

COPYRIGHT©1994 - 2008 DEERE & COMPANY Moline, Illinois All rights reserved

(3B13) HANDRAILS-OPERATOR'S CAB
GARDE-CORPS DE CABINE
GELAENDER-FAHRERKABINE
PASSAMANI DELLA CABINA
PASAMANOS DE CABINA
RACKE FOR FORARHYTT

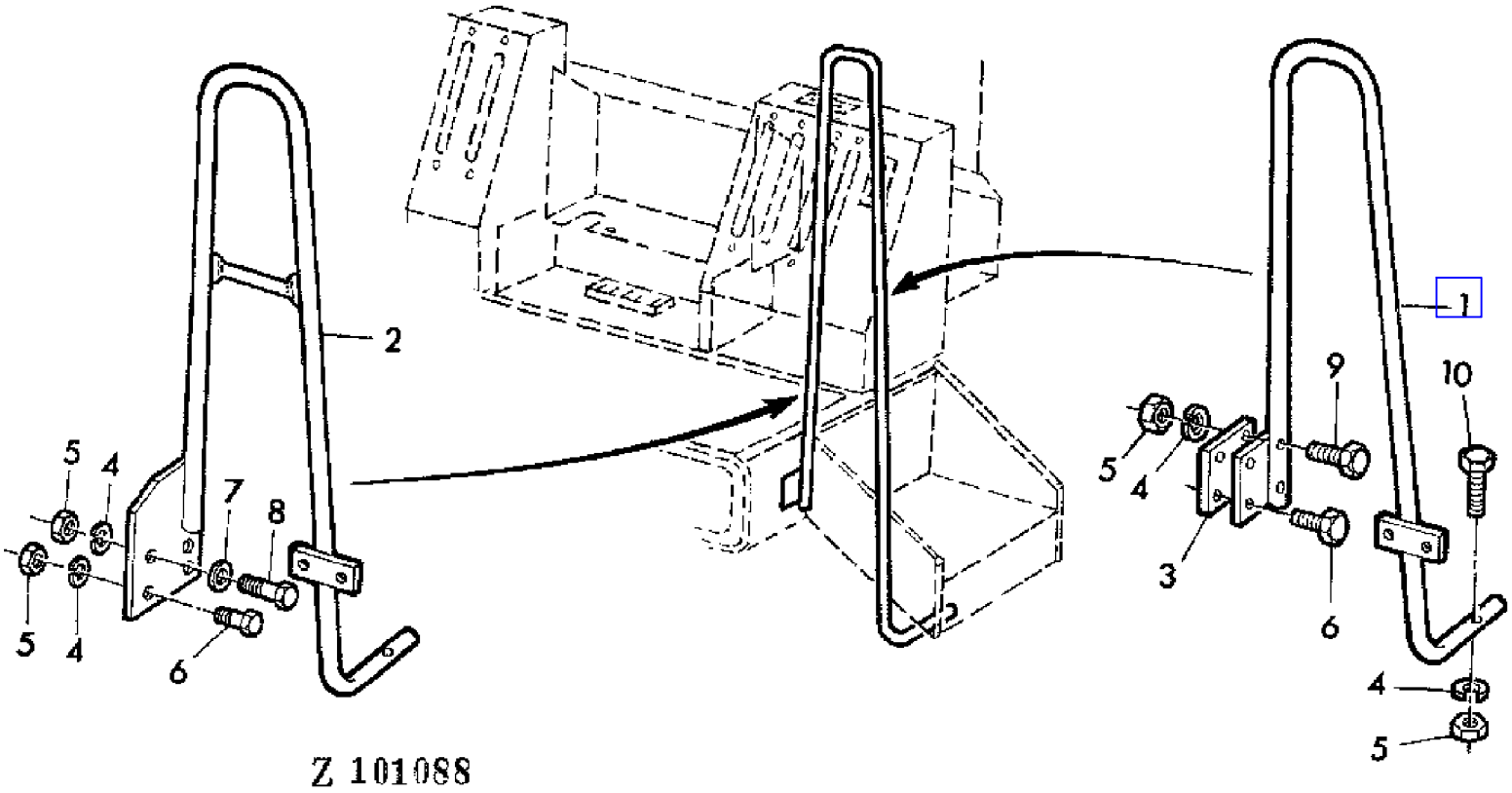

COPYRIGHT©1994 - 2008 DEERE & COMPANY Moline, Illinois All rights reserved

(3B13) HANDRAILS-OPERATOR'S CAB
GARDE-CORPS DE CABINE
GELAENDER-FAHRERKABINE
PASSAMANI DELLA CABINA
PASAMANOS DE CABINA
RACKE FOR FORARHYTT

KEY	PART NO.	PART NAME	QTY	SERIAL NO.	955	REMARKS
1	DA21238	RAMP	1		X	(SUB FOR DA19457)
2	AZ30527	HANDRAIL	1		X	(AR)
3	CA19458	PLATE	1		X	
4	12M7008	LOCK WASHER	AR		X	8MM
5	14M7029	NUT	AR		X	M8
6	19M7139	CAP SCREW	AR		X	M8X20
7	24M7036	WASHER	AR		X	9MM
8	19M7163	CAP SCREW	AR		X	M8X25
9	19M7269	CAP SCREW	AR		X	M8X50
10	19M7323	CAP SCREW	AR		X	M8X40

COPYRIGHT©1994 - 2008 DEERE & COMPANY Moline, Illinois All rights reserved

(3E04) HEATER AND EVAPORATOR-AIR CONDITIONED CAB
CHAUFFAGE ET EVAPORATEUR-CABINE CLIMATISEE
HEIZUNG UND VERDAMPFER-KABINE MIT KLIMAANLAGE
RISCALDAMENTO E EVAPORATORE-CABINA CONDIZIONATA
CALENTADOR Y EVAPORADOR-CABINA CON AIRE ACONDICIONADO
HYTTVAERMARE OCH FORANGARE-HYTT MED LUFTKONDITIONERING

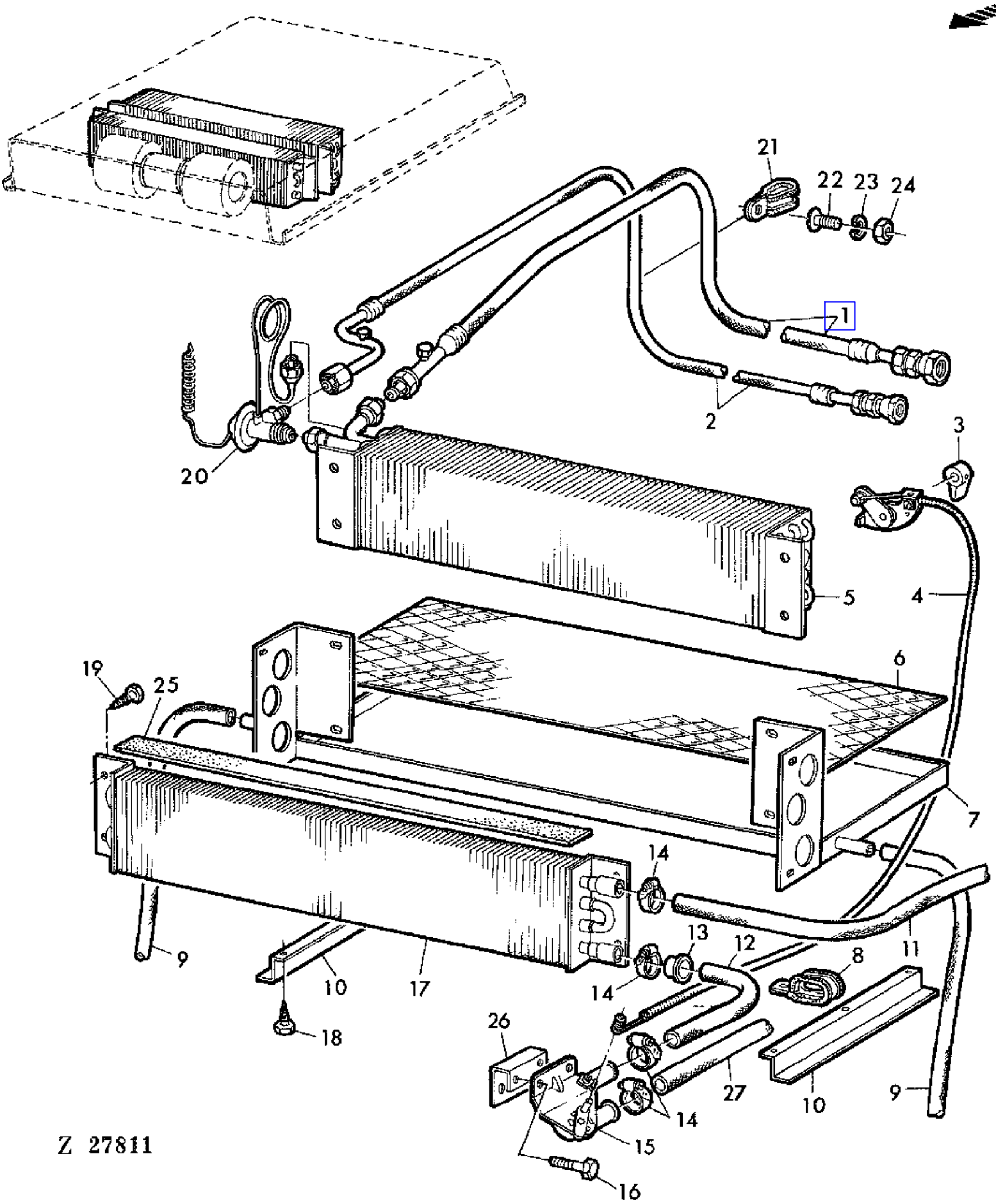

COPYRIGHT©1994 - 2008 DEERE & COMPANY Moline, Illinois All rights reserved

(3E04) HEATER AND EVAPORATOR-AIR CONDITIONED CAB
CHAUFFAGE ET EVAPORATEUR-CABINE CLIMATISEE
HEIZUNG UND VERDAMPFER-KABINE MIT KLIMAANLAGE
RISCALDAMENTO E EVAPORATORE-CABINA CONDIZIONATA
CALENTADOR Y EVAPORADOR-CABINA CON AIRE ACONDICIONADO
HYTTVAERMARE OCH FORANGARE-HYTT MED LUFTKONDITIONERING

KEY	PART NO.	PART NAME	QTY	SERIAL NO.	955	REMARKS
1	DA19972	HYDRAULIC HOSE	1		X	
2	DA19973	HYDRAULIC HOSE	1		X	
3	AH91003	KNOB	1		X	
4	AH80165	PUSH PULL CABLE	1		X	
5	AH80696	EVAPORATOR	1		X	
6	H82237	SCREEN	1		X	
7	AH88881	HOLDER	1		X	
8	CA20328	CLAMP	3		X	
9	H83025	LINE	2		X	
10	H85485	SHIELD	2		X	
11	CA22662	HOSE	1		X	
12	H82425	HOSE	1		X	
13	H82426	GROMMET	1		X	
14	AR21837	CLAMP	4		X	
15	AH80166	VALVE	1		X	
16	19H1919	CAP SCREW	3		X	1/4"X5/8"
17	AH80167	HEATER	1		X	
18	37H32	SCREW	6		X	3/8"
19	37H14	SCREW	4		X	1/2"
20	AH80191	VALVE	1		X	
21	CA20325	CLAMP	3		X	
22	21M7081	SCREW	3		X	M8X15
23	12M7008	LOCK WASHER	3		X	8MM
24	14M7029	NUT	3		X	M8
25	H81669	WEATHERSTRIP	1		X	
26	AH80164	BRACKET	1		X	
27	CA22662	HOSE	2		X	(SUB FOR CA19971)

COPYRIGHT©1994 - 2008 DEERE & COMPANY Moline, Illinois All rights reserved

(PC4146) 955 Combine

(2E20) HEAVY-DUTY FRAME
BATI RENFORCE
UNTERZUG
TELAIO RINFORZATO
BASTIDOR REFORZADO
FOERSTAERKT HUVUDRAM

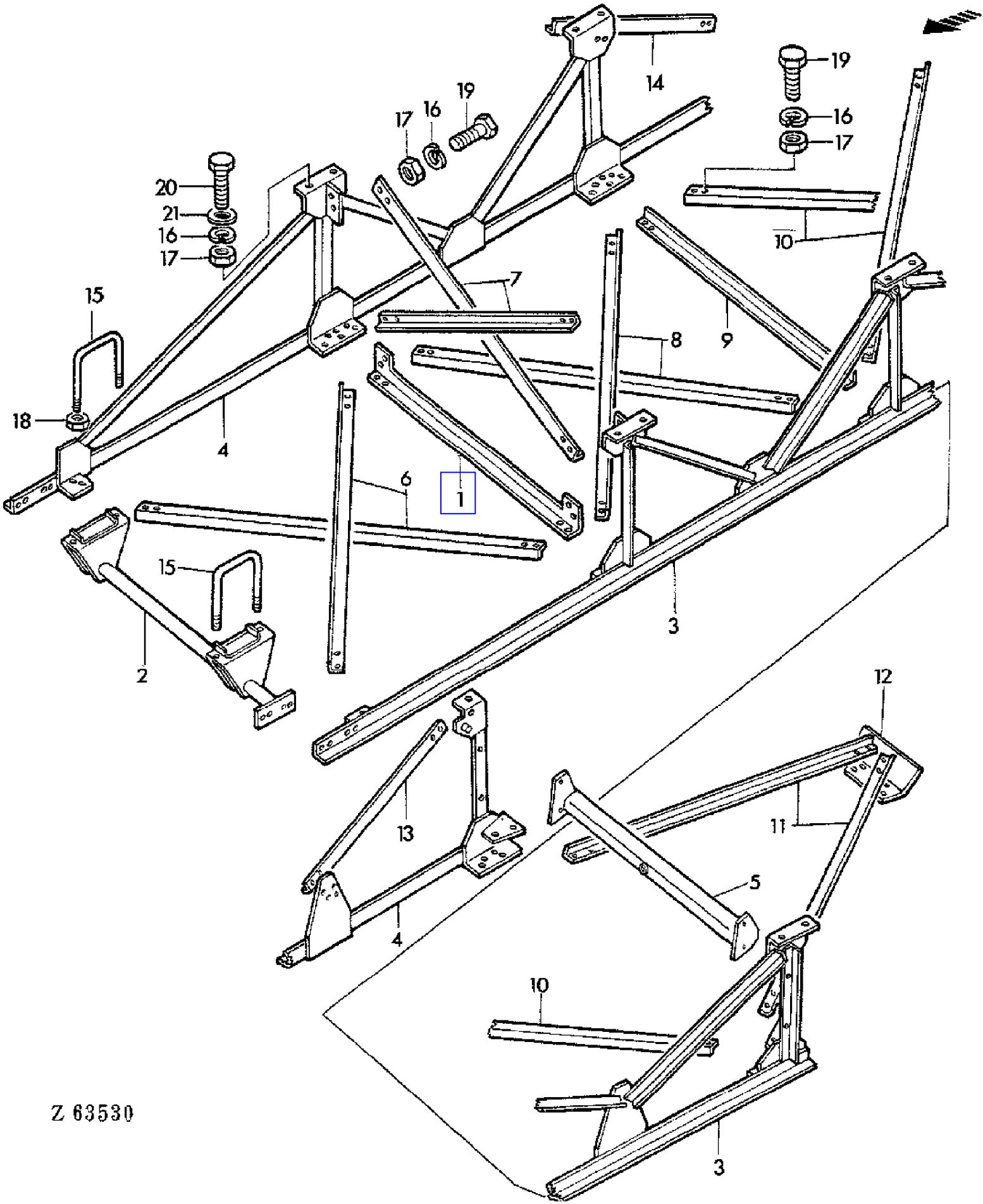

COPYRIGHT©1994 - 2008 DEERE & COMPANY Moline, Illinois All rights reserved

(PC4146) 955 Combine

(2E20) HEAVY-DUTY FRAME
BATI RENFORCE
UNTERZUG
TELAIO RINFORZATO
BASTIDOR REFORZADO
FOERSTAERKT HUVUDRAM

KEY	PART NO.	PART NAME	QTY	SERIAL NO.	955	REMARKS
1	AZ17428	BRACE	1	- XXXX	X	
2	AZ17435	BRACKET	1		X	
3	AZ17436	FRAME	1	- XXXX	X	
4	AZ17437	FRAME	1	- XXXX	X	
5	AZ20604	BRACKET	1		X	
6	Z28866	BRACE	2		X	
7	Z28868	BRACE	2	- XXXX	X	
8	Z28870	BRACE	2		X	
9	Z28871	BRACE	1		X	
10	Z28869	BRACE	2		X	
11	Z28877	BRACE	2	- XXXX	X	
12	Z28865	SHEET	1	- XXXX	X	
13	Z28897	BRACE	1		X	
14	Z28896	ANGLE	1		X	
15	Z28895	BAIL	2		X	
16	12M7013	LOCK WASHER	79		X	10MM
17	14M7140	NUT	79		X	M10
18	14M7170	LOCK NUT	4		X	M16
19	19M7167	CAP SCREW	68		X	M10X25
20	19M7168	CAP SCREW	11		X	M10X30
21	24M7028	WASHER	2		X	10,5MM

COPYRIGHT©1994 - 2008 DEERE & COMPANY Moline, Illinois All rights reserved

(2E22) HEAVY-DUTY FRAME
BATI RENFORCE
UNTERZUG
TELAIO RINFORZATO
BASTIDOR REFORZADO
FORSTAERKT HUVUDRAM

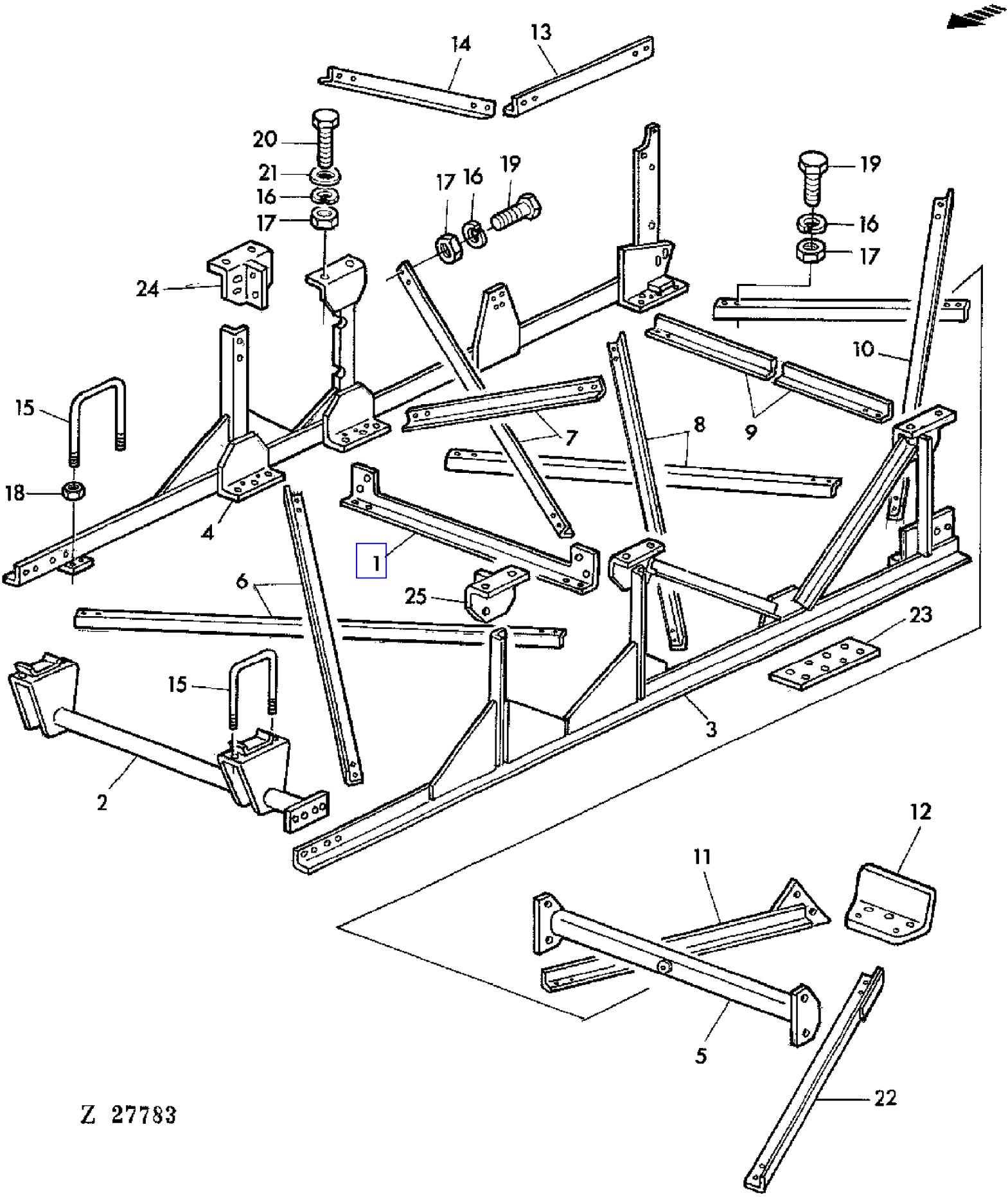

COPYRIGHT©1994 - 2008 DEERE & COMPANY Moline, Illinois All rights reserved

(PC4146) 955 Combine

(2E22) HEAVY-DUTY FRAME
BATI RENFORCE
UNTERZUG
TELAIO RINFORZATO
BASTIDOR REFORZADO
FORSTAERKT HUVUDRAM

KEY	PART NO.	PART NAME	QTY	SERIAL NO.		955	REMARKS
1	AZ29292	BRACE	1	XXXX	-	X	
2	AZ17435	BRACKET	1			X	
3	AZ29296	FRAME	1	XXXX	-	X	
4	AZ29295	FRAME	1	XXXX	-	X	
5	AZ20604	BRACKET	1			X	
6	Z28866	BRACE	2			X	
7	Z39778	ANGLE	2	XXXX	-	X	
8	Z28870	BRACE	2			X	
9	Z28871	BRACE	1			X	
10	Z28869	BRACE	2			X	
11	AZ29290	BRACE	1	XXXX	-	X	
12	Z39791	HOLDER	1	XXXX	-	X	
13	Z28897	BRACE	1			X	
14	Z28896	ANGLE	1			X	
15	Z28895	BAIL	2			X	
16	12M7013	LOCK WASHER	79			X	10MM
17	14M7140	NUT	79			X	M10
18	14M7170	LOCK NUT	4			X	M16
19	19M7167	CAP SCREW	68			X	M10X25
20	19M7168	CAP SCREW	11			X	M10X30
21	24M7028	WASHER	2			X	10,5MM
22	AZ29291	BRACE	1	XXXX	-	X	
23	Z28965	PLATE	1	XXXX	-	X	
24	AZ29294	REINFORCEMENT	1	XXXX	-	X	
25	AZ29293	REINFORCEMENT	1	XXXX	-	X	

COPYRIGHT©1994 - 2008 DEERE & COMPANY Moline, Illinois All rights reserved

(2D08) HYDRAULIC CONNECTIONS FOR HYDROSTATIC REEL DRIVE
COMMANDE DE L'ENTRAINEMENT HYDROSTATIQUE DU RABATTEUR
ARMATUREN FUER HYDROSTATISCHEN HASPELANTRIEB
RACCORDI IDR. PER COMANDO IDROSTATICO DELL'ASPO
MANDOS PARA ACCIONAMIENTO HIDROSTATICO DEL MOLINETE
ANSLUTNINGAR FOR HYDROSTATISKT HASPELDRIVNING

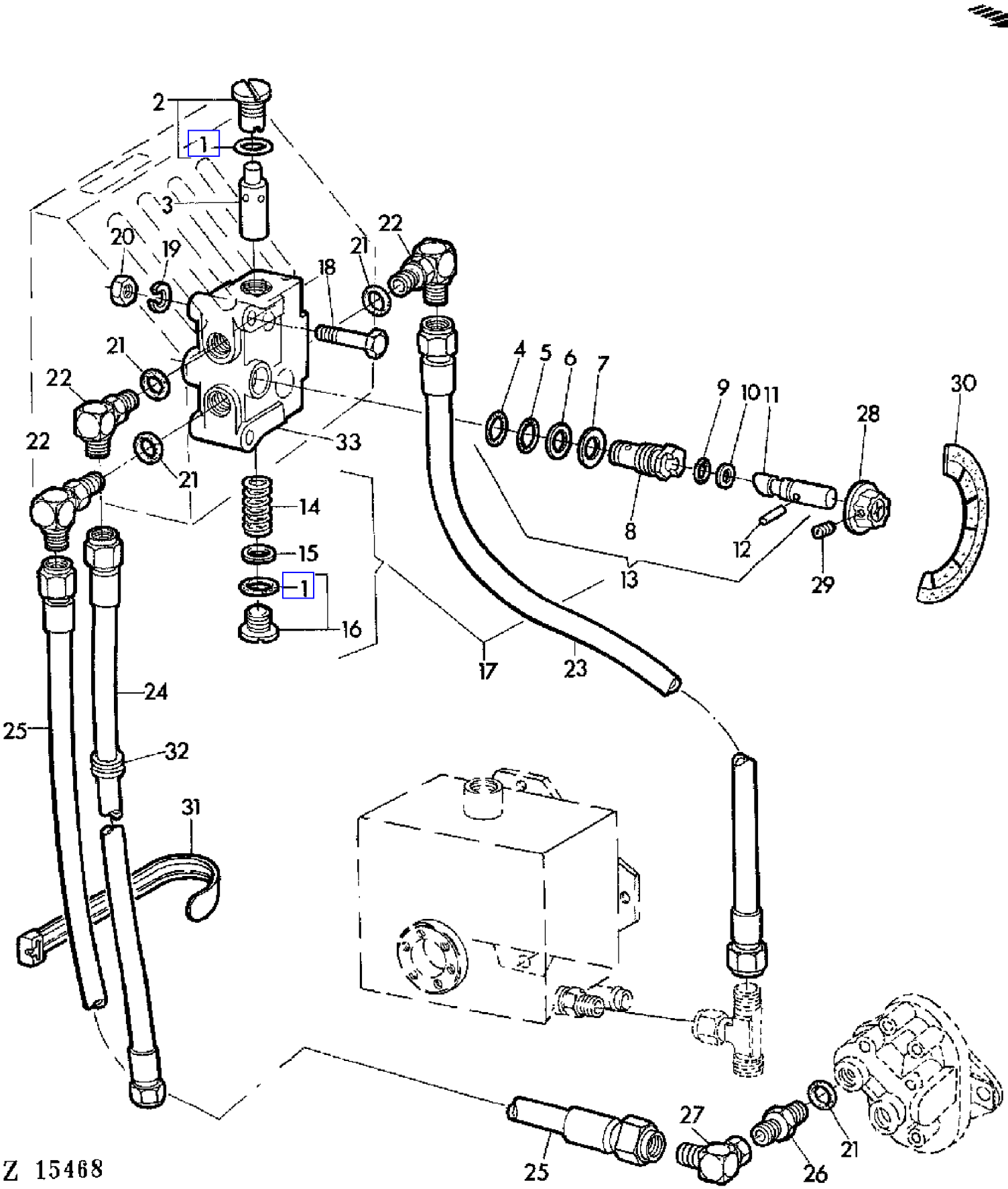

COPYRIGHT©1994 - 2008 DEERE & COMPANY Moline, Illinois All rights reserved

(2D08) HYDRAULIC CONNECTIONS FOR HYDROSTATIC REEL DRIVE
COMMANDE DE L'ENTRAINEMENT HYDROSTATIQUE DU RABATTEUR
ARMATUREN FUER HYDROSTATISCHEN HASPELANTRIEB
RACCORDI IDR. PER COMANDO IDROSTATICO DELL'ASPO
MANDOS PARA ACCIONAMIENTO HIDROSTATICO DEL MOLINETE
ANSLUTNINGAR FOR HYDROSTATISKT HASPELDRIVNING

KEY	PART NO.	PART NAME	QTY	SERIAL NO.	955	REMARKS
1	H63289	O-RING	AR		X	NSEP (ORD AH81167) (SUB FOR P47889)
2	AH81165	PLUG	1		X	INCL KEY 1
3	.....	RELIEF VALVE	1		X	NSEP (ORD AH122371)
4	R28776	O-RING	AR		X	NSEP (ORD AH81167)
5	R375R	O-RING	AR		X	NSEP (ORD AH81167)
6	H63357	BACK-UP RING	1		X	NSEP (ORD AH81167)
7	H80404	SHIM	AR		X	
8	.....	SLEEVE	1		X	NSEP (ORD AH122354)
9	P51212	O-RING	AR		X	NSEP (ORD AH81167) (SUB FOR R10093)
10	T27624	BACK-UP RING	1		X	NSEP (ORD AH81167) (SUB FOR H61397)
11	.....	SPOOL VALVE	1		X	NSEP (ORD AH122354)
12	H101370	GROOVE PIN	1		X	(SUB FOR H80403)
13	AH122354	KIT	1		X	KIT, INCL KEYS 4-12 (SUB FOR AH81166)
14	.....	SPRING	1		X	NSEP (ORD AH122371)
15	.....	WASHER	1		X	NSEP (ORD AH122371)
16	AH78760	DRAIN PLUG	1		X	INCL KEY 1
17	AH122371	CHECK VALVE	1		X	ASSY, INCL KEYS 1-16,33 (SUB FOR AH81164)
18	19M7185	CAP SCREW	2		X	M8X60
19	12M7008	LOCK WASHER	2		X	8MM
20	14M7029	NUT	2		X	M8
21	R26906	O-RING	AR		X	
22	AR26724	ELBOW FITTING	3		X	
23	AZ25026	HYDRAULIC HOSE	1		X	
24	AZ25024	HYDRAULIC HOSE	1		X	
25	AZ35342	HYDRAULIC HOSE	1		X	(SUB FOR AZ25025, AZ25460)
26	R27270	FITTING	1		X	
27	AH77612	ELBOW FITTING	1		X	
28	AH76955	KNOB	1		X	
29	22H922	SET SCREW	1		X	
30	H78701	DECAL	1		X	
31	Z34568	CLAMP	5		X	
32	Z36557	GROMMET	3		X	
33	.....	CONTROL VALVE	1		X	NSEP (ORD AH122371)
..	AH81167	SEAL KIT	1		X	KIT, INCL KEYS 1,4-6,9,10

COPYRIGHT©1994 - 2008 DEERE & COMPANY Moline, Illinois All rights reserved

(2D14) HYDRAULIC DAMPER
DAMPER HYDRAULIQUE
HYDRAULIKDAEMPFER
AMMORTIZZATORE IDRAULICO
AMORTIGUADOR HIDRAULICO
HYDRAULISK STOTDAMPARE

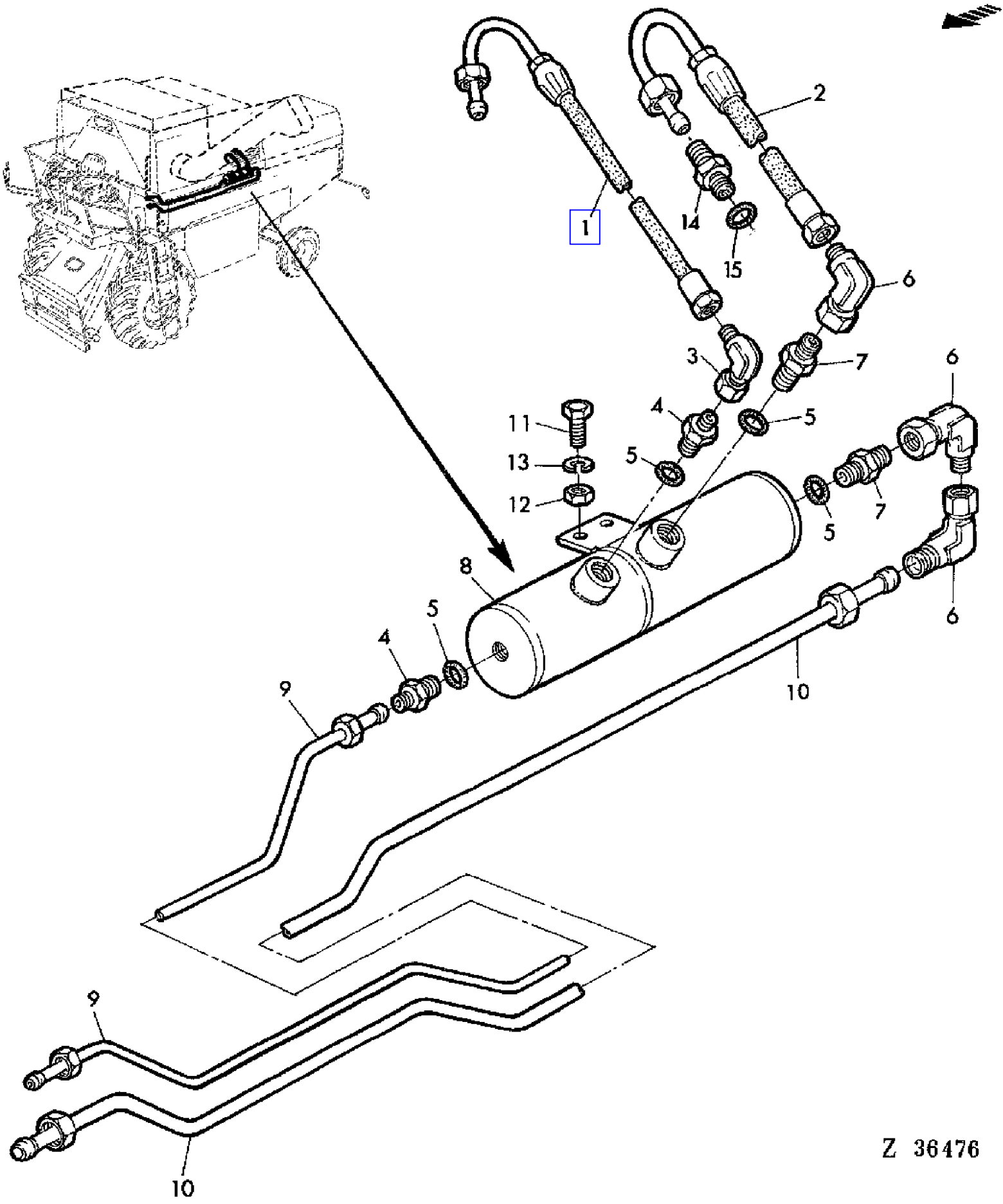

COPYRIGHT©1994 - 2008 DEERE & COMPANY Moline, Illinois All rights reserved

(2D14) HYDRAULIC DAMPER
DAMPER HYDRAULIQUE
HYDRAULIKDAEMPFER
AMMORTIZZATORE IDRAULICO
AMORTIGUADOR HIDRAULICO
HYDRAULISK STOTDAMPARE

KEY	PART NO.	PART NAME	QTY	SERIAL NO.	955	REMARKS
1	AZ31055	HYDRAULIC HOSE	1		X	
2	AZ31056	HYDRAULIC HOSE	1		X	
3	AZ21974	ELBOW FITTING	1		X	
4	Z32970	ADAPTER	2		X	
5	R26375	O-RING	4		X	
6	AZ21975	ELBOW FITTING	3		X	
7	Z32966	FITTING	2		X	
8	AZ31283	ATTENUATOR	1		X	
9	AZ31057	OIL LINE	1		X	
10	AZ31058	OIL LINE	1		X	
11	19M7382	CAP SCREW	2		X	M10X40
12	14M7140	NUT	AR		X	M10
13	12M7013	LOCK WASHER	AR		X	10MM
14	Z41260	FITTING	1		X	
15	R26906	O-RING	1		X	

COPYRIGHT©1994 - 2008 DEERE & COMPANY Moline, Illinois All rights reserved

(2D19) HYDRAULIC FLOW VALVE FOR HYDR.REEL DRIVE,SPARE PARTS
SOUPAPE REGULATRICE DE DEBIT POUR ENTR.HYDRO.DU RABATTEUR
STROMREGELVENTIL FUER HYDROST.HASPELANTRIEB
VALVOLA CONTROLLO FLUSSO PER AZIONAMENTO IDROST.ASPO
VALVULA REGULADORA DE CAUDAL PARA TRANSM.HIDRAUL.MOLINETE
ELODESKONTROLLVENTIL FOR HYDROSTATISK HASPELDRIVNING

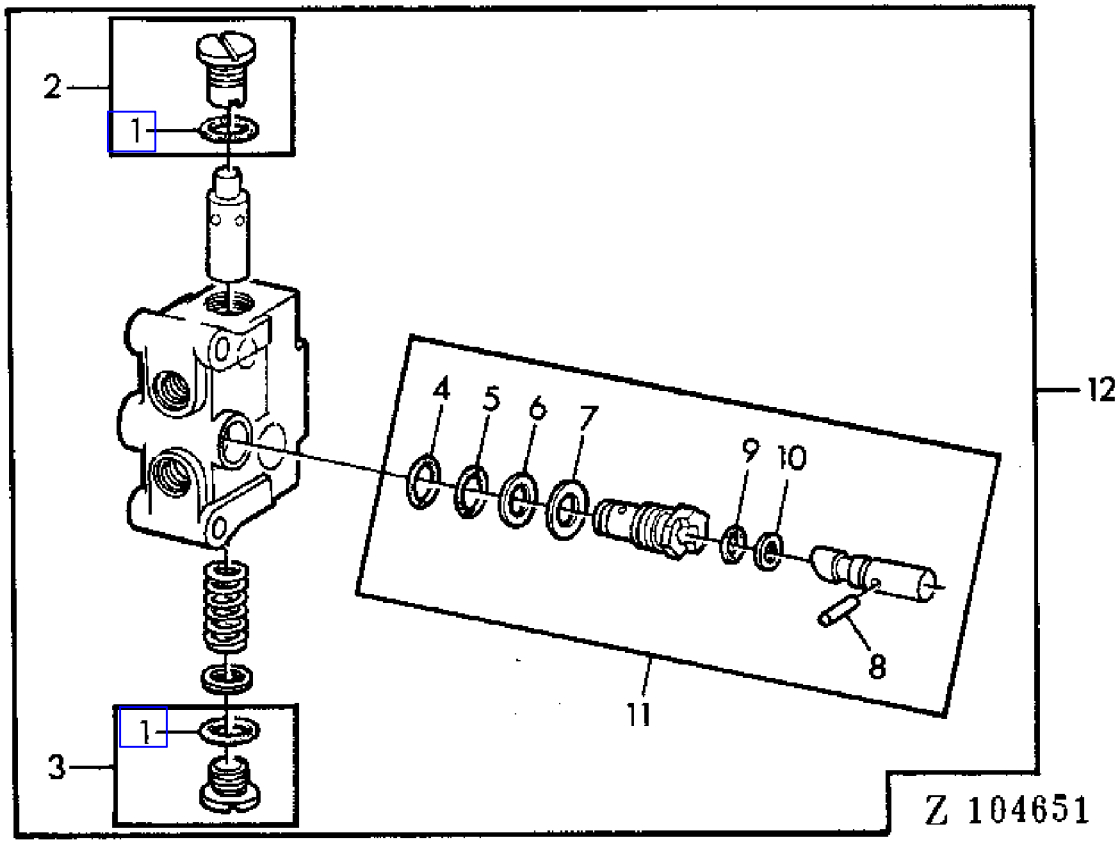

COPYRIGHT©1994 - 2008 DEERE & COMPANY Moline, Illinois All rights reserved

(2D19) HYDRAULIC FLOW VALVE FOR HYDR.REEL DRIVE,SPARE PARTS
SOUPAPE REGULATRICE DE DEBIT POUR ENTR.HYDRO.DU RABATTEUR
STROMREGELVENTIL FUER HYDROST.HASPELANTRIEB
VALVOLA CONTROLLO FLUSSO PER AZIONAMENTO IDROST.ASPO
VALVULA REGULADORA DE CAUDAL PARA TRANSM.HIDRAUL.MOLINETE
ELODESKONTROLLVENTIL FOR HYDROSTATISK HASPELDRIVNING

KEY	PART NO.	PART NAME	QTY	SERIAL NO.	955	REMARKS
1	H63289	O-RING	2		X	(KIT AH81167) (SUB FOR P47889)
2	AH81165	PLUG	1		X	
3	AH78760	DRAIN PLUG	1		X	
4	R28776	O-RING	1		X	(KIT AH81167)
5	R375R	O-RING	1		X	(KIT AH81167)
6	H63357	BACK-UP RING	1		X	(KIT AH81167)
7	H80404	SHIM	1		X	
8	H101370	GROOVE PIN	1		X	(SUB FOR H80403)
9	P51212	O-RING	1		X	(KIT AH81167) (SUB FOR R10093)
10	T27624	BACK-UP RING	1		X	(KIT AH81167) (SUB FOR H61397)
11	AH122354	KIT	1		X	(SUB FOR AH81166)
12	AH122371	CHECK VALVE	1		X	(SUB FOR AH81164)

COPYRIGHT©1994 - 2008 DEERE & COMPANY Moline, Illinois All rights reserved

(2D20) HYDRAULIC FLOW VALVE,SPARE PARTS
SOUPAPE REGULATRICE DE DEBIT,ELEMENTS
STROMREGELVENTIL-TEILESATZ
VALVOLA CONTROLLO FLUSSO PARTI
VALVULA REGULADORA DE CAUDAL,JUEGO DE PIEZAS
FLODESKONTROLLVENTIL,DELAR

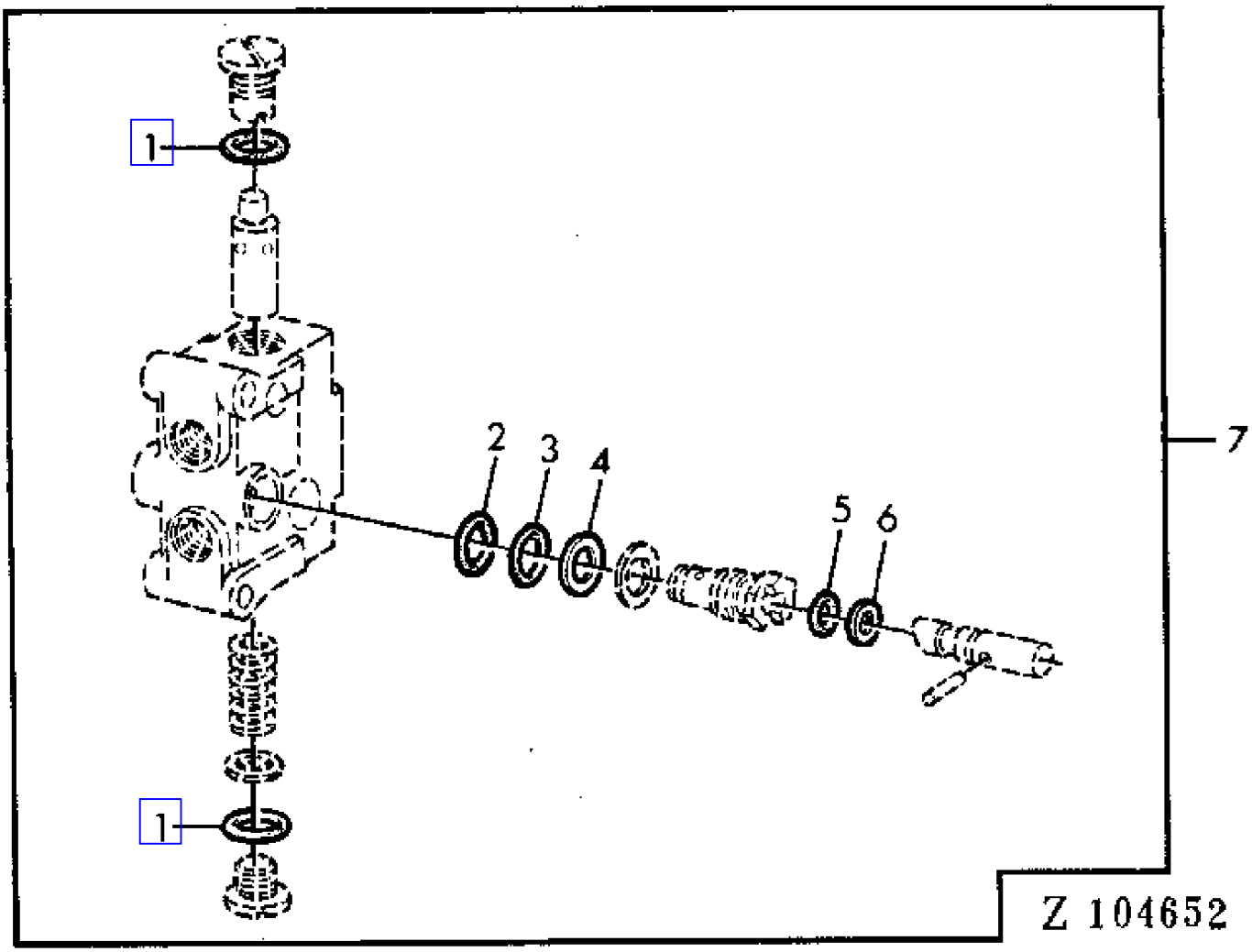

COPYRIGHT©1994 - 2008 DEERE & COMPANY Moline, Illinois All rights reserved

(2D20) HYDRAULIC FLOW VALVE,SPARE PARTS
SOUPAPE REGULATRICE DE DEBIT,ELEMENTS
STROMREGELVENTIL-TEILESATZ
VALVOLA CONTROLLO FLUSSO PARTI
VALVULA REGULADORA DE CAUDAL,JUEGO DE PIEZAS
FLODESKONTROLLVENTIL,DELAR

KEY	PART NO.	PART NAME	QTY	SERIAL NO.	955	REMARKS
1	H63289	O-RING	2		X	(SUB FOR P47889)
2	R28776	O-RING	1		X	
3	R375R	O-RING	1		X	
4	H63357	BACK-UP RING	1		X	
5	P51212	O-RING	1		X	(SUB FOR R10093)
6	T27624	BACK-UP RING	1		X	(SUB FOR H61397)
7	AH81167	SEAL KIT	1		X	

COPYRIGHT©1994 - 2008 DEERE & COMPANY Moline, Illinois All rights reserved

(2D10) HYDRAULIC HOSES FOR HYDROSTATIC REEL DRIVE
FLEXIBLES DE L'ENTRAINEMENT HYDROSTATIQUE DU RABATTEUR
HYDRAULIKSCHLAEUCHE FUER HYDROSTATISCHEN HASPELANTRIEB
TUBI PER COMANDO IDROSTATICO DELL'ASPO
TUBOS FLEXIBLES PARA ACCIONAMIENTO HIDROSTAT.DEL MOLINETE
HYDRAULSANGAR FOR HYDROSTATISKT HASPELDRIVNING

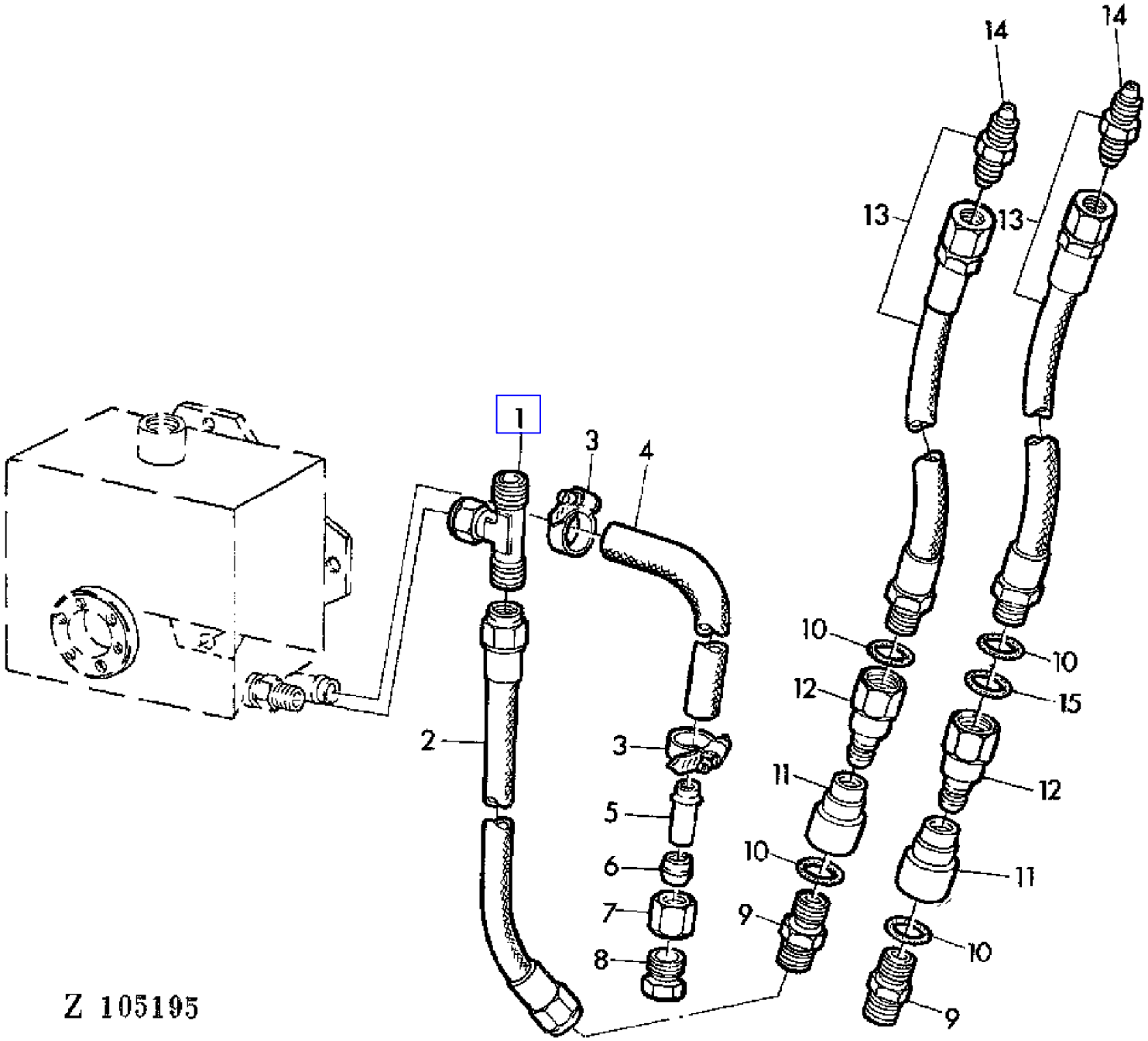

COPYRIGHT©1994 - 2008 DEERE & COMPANY Moline, Illinois All rights reserved

(2D10) HYDRAULIC HOSES FOR HYDROSTATIC REEL DRIVE
FLEXIBLES DE L'ENTRAINEMENT HYDROSTATIQUE DU RABATTEUR
HYDRAULIKSCHLAEUCHE FUER HYDROSTATISCHEN HASPELANTRIEB
TUBI PER COMANDO IDROSTATICO DELL'ASPO
TUBOS FLEXIBLES PARA ACCIONAMIENTO HIDROSTAT.DEL MOLINETE
HYDRAULSANGAR FOR HYDROSTATISKT HASPELDRIVNING

KEY	PART NO.	PART NAME	QTY	SERIAL NO.	955	REMARKS
1	AZ24580	TEE FITTING	1		X	(SUB FOR AZ25032)
2	AZ25023	HYDRAULIC HOSE	1		X	
3	Z26822	CLAMP	2		X	
4	Z46100	HOSE	1		X	(SUB FOR Z28156)
5	Z28154	PIPE	1		X	
6	Z32993	SLEEVE FITTING	1		X	
7	Z32973	TUBE NUT	1		X	
8	Z28155	PIPE PLUG	1		X	
9	T45644	FITTING	2		X	
10	R26375	O-RING	4		X	
11	AH75167	HYD. QUICK-CONNECT COUPLER	2		X	
12	AR94522	INTERNAL HALF COUPLER	2		X	(SUB FOR AH15000)
13	AZ26930	HYDRAULIC HOSE	2		X	INCL KEY 14 (SUB FOR AZ25042)
14	R34063	FITTING	2		X	
15	R21722	O-RING	1		X	

COPYRIGHT©1994 - 2008 DEERE & COMPANY Moline, Illinois All rights reserved

(2C25) HYDRAULIC LINES (STEERING) FOR WIDE AXLE
CONDUITES DE LA DIRECTION POUR ESSIEU LARGE
HYDRAULIKLEITUNGEN (LENKUNG) FUER BREITE HINTERACHSE
LINEE IDRAULICHE(STERZO), PER ASSALE LARGO
TUBERIAS DE ACEITE (DIRECCION), PARA EJE ANCHO
HYDRAULLEDNINGAR(STYRNING) FOR BRED AXEL

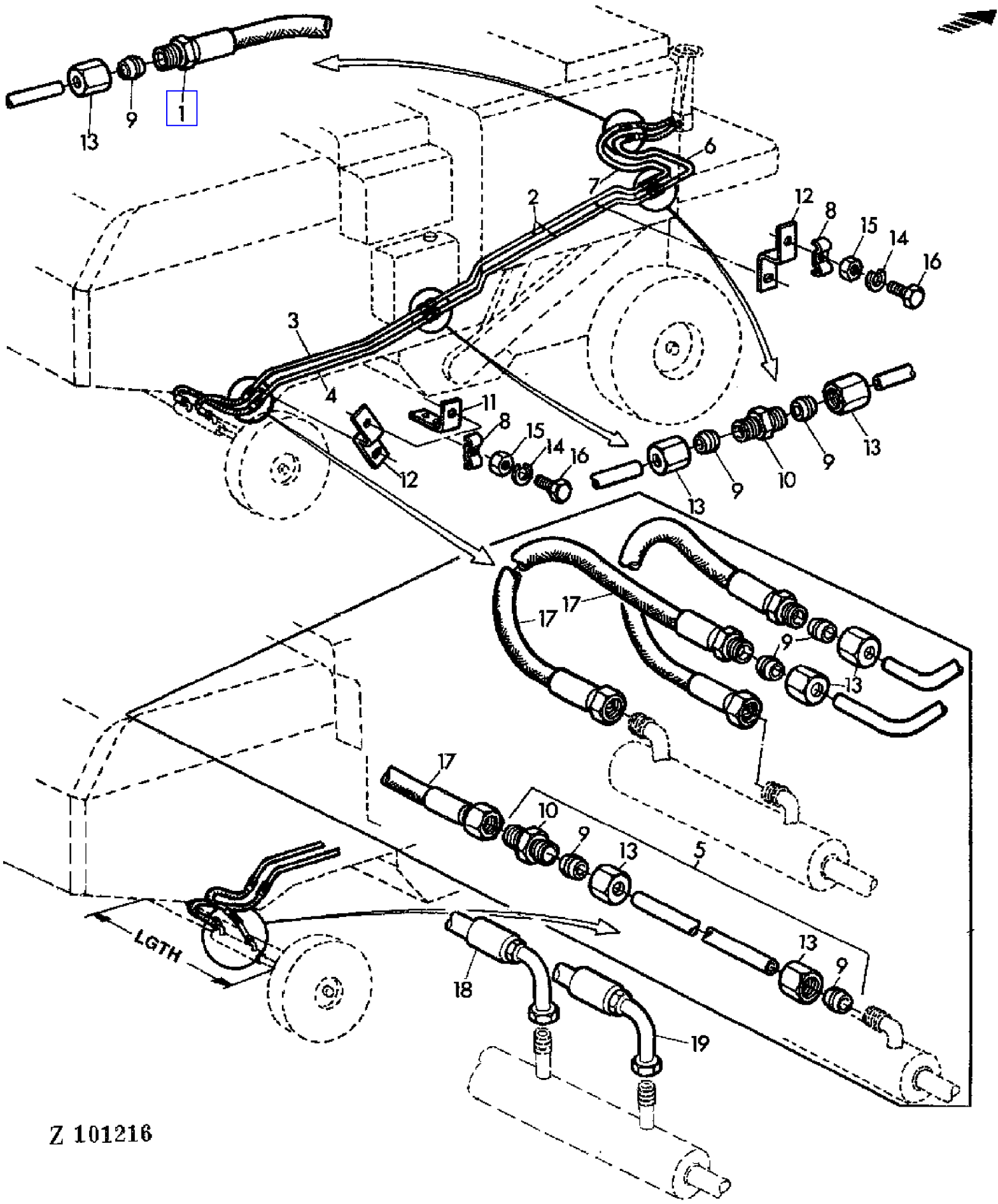

COPYRIGHT©1994 - 2008 DEERE & COMPANY Moline, Illinois All rights reserved

(2C25) HYDRAULIC LINES (STEERING) FOR WIDE AXLE
CONDUITES DE LA DIRECTION POUR ESSIEU LARGE
HYDRAULIKLEITUNGEN (LENKUNG) FUER BREITE HINTERACHSE
LINEE IDRAULICHE(STERZO), PER ASSALE LARGO
TUBERIAS DE ACEITE (DIRECCION), PARA EJE ANCHO
HYDRAULLEDNINGAR(STYRNING) FOR BRED AXEL

KEY	PART NO.	PART NAME	QTY	SERIAL NO.		955	REMARKS
1	AZ31463	HYDRAULIC HOSE	2			X	(SUB FOR AZ16228, AZ29328)
2	AZ22123	OIL LINE	2			X	INCL KEYS 9,13
3	AZ22128	OIL LINE	1			X	INCL KEYS 9,13
4	AZ22129	OIL LINE	1			X	INCL KEYS 9,13
5	AZ22176	OIL LINE	1		- 023197	X	(A) AR, INCL KEYS 9,10,13
6	AZ22206	OIL LINE	1			X	INCL KEYS 9,13
7	AZ22207	OIL LINE	1			X	INCL KEYS 9,13
8	Z22063	CLAMP	7			X	
9	Z32995	SLEEVE FITTING	AR			X	
10	Z32960	COUPLING	AR			X	
11	Z42773	LOOM	2			X	(SUB FOR Z27437 APPL)
12	Z27445	HOLDER	3			X	
13	Z32974	TUBE NUT	AR			X	
14	12M7012	LOCK WASHER	7			X	6MM
15	14M7027	NUT	7			X	M6
16	19M7159	CAP SCREW	7			X	M6X15
17	AZ16228	HYDRAULIC HOSE	2		- 023197	X	
18	AZ25674	HYDRAULIC HOSE	1	023198	-	X	
19	AZ25675	HYDRAULIC HOSE	1	023198	-	X	

(A) ONLY WITH 2276MM (89.61") REAR AXLE
UNIQUEMENT AVEC ESSIEU ARRIERE DE 2276 MM (89.61 IN)
NUR BEI HINTERACHSE MIT 2276MM (89.61 IN.)
SOLO CON ASSALE POSTERIORE DI 2276MM (89.61")
SOLO CON EJE TRASERO DE 2276MM (89.61")
ENDAST VID 2276MM-BAKAXEL

COPYRIGHT©1994 - 2008 DEERE & COMPANY Moline, Illinois All rights reserved

(2C07) HYDRAULIC LINES BETWEEN PUMP AND CONTROL VALVE
CONDUITES ENTRE POMPE ET DISTRIBUTEUR
LEITUNGEN ZWISCHEN PUMPE UND STEUERGERAET
LINEE DALLA POMPA AL DISTRIBUTORE
TUBERIAS DE ACEITE ENTRE BOMBA Y VALVULA DE MANDO
LEDNINGAR FRAN HYDRAULPUMP TILL MANOVERVENTIL

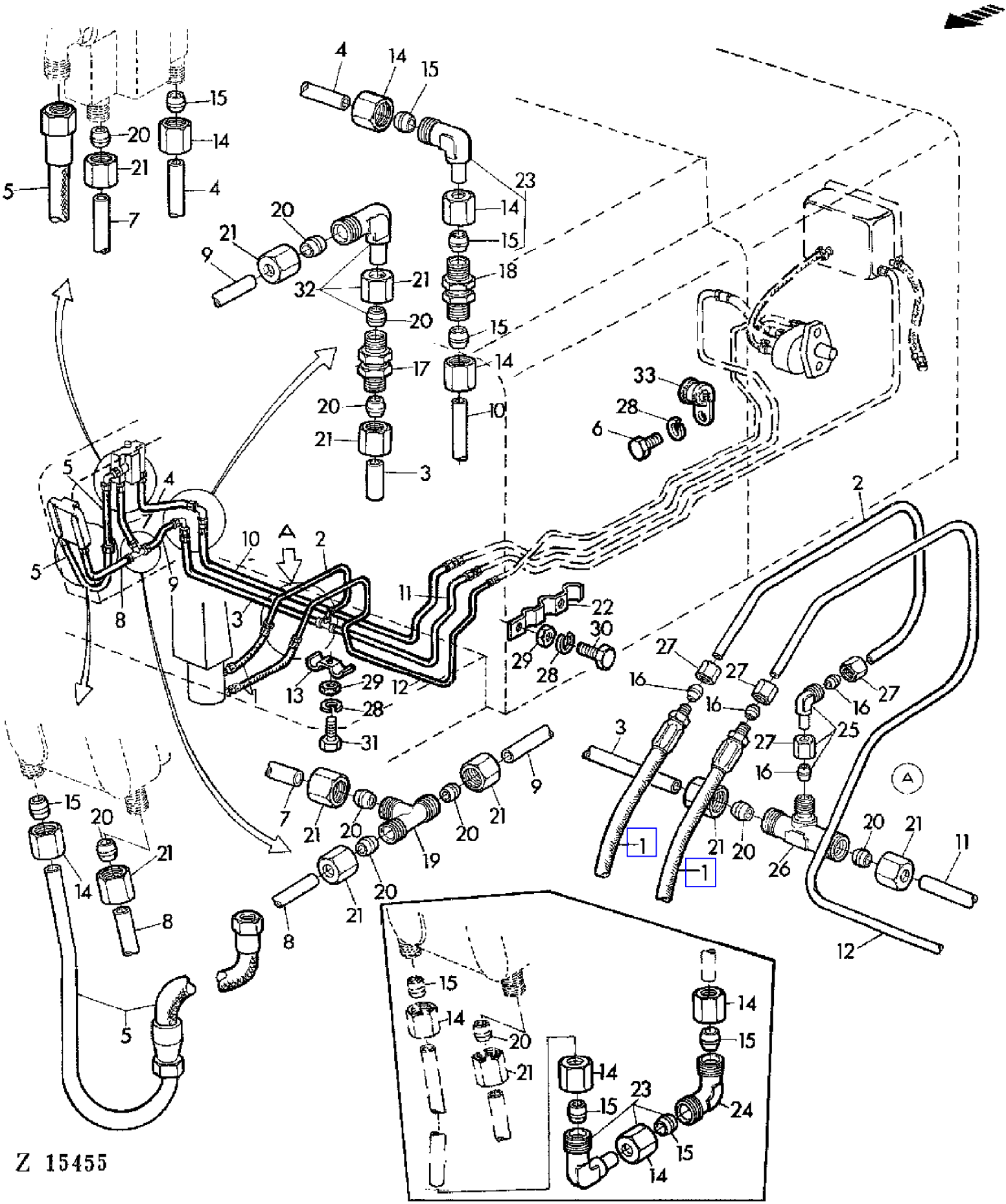

COPYRIGHT©1994 - 2008 DEERE & COMPANY Moline, Illinois All rights reserved

(2C07) HYDRAULIC LINES BETWEEN PUMP AND CONTROL VALVE
CONDUITES ENTRE POMPE ET DISTRIBUTEUR
LEITUNGEN ZWISCHEN PUMPE UND STEUERGERAET
LINEE DALLA POMPA AL DISTRIBUTORE
TUBERIAS DE ACEITE ENTRE BOMBA Y VALVULA DE MANDO
LEDNINGAR FRAN HYDRAULPUMP TILL MANOVERVENTIL

KEY	PART NO.	PART NAME	QTY	SERIAL NO.	955	REMARKS
1	AZ29328	HYDRAULIC HOSE	2		X	(SUB FOR AZ16228)
2	AZ22181	OIL LINE	1		X	INCL KEYS 16,27
3	AZ22182	OIL LINE	1		X	INCL KEYS 20,21
4	AZ22185	OIL LINE	1		X	INCL KEYS 14,15
5	AZ24872	HYDRAULIC HOSE	1		X	(SUB FOR AZ22186, AZ22187)
6	19M7159	CAP SCREW	AR		X	M6X15
7	AZ22188	OIL LINE	1		X	INCL KEYS 20,21
8	AZ22189	OIL LINE	1		X	INCL KEYS 20,21
9	AZ22190	OIL LINE	1		X	INCL KEYS 20,21
10	AZ22203	OIL LINE	1		X	INCL KEYS 14,15
11	AZ22204	OIL LINE	1		X	INCL KEYS 20,21
12	AZ22205	OIL LINE	1		X	INCL KEYS 16,27
13	Z22063	CLAMP	AR		X	
14	Z32973	TUBE NUT	AR		X	
15	Z32993	SLEEVE FITTING	AR		X	
16	Z32995	SLEEVE FITTING	AR		X	
17	Z32979	UNION FITTING	AR		X	
18	Z32982	UNION FITTING	AR		X	
19	Z32986	TEE FITTING	1		X	
20	Z32992	SLEEVE FITTING	AR		X	
21	Z32972	TUBE NUT	AR		X	
22	Z30599	CLAMP	AR		X	
23	AZ21975	ELBOW FITTING	AR		X	INCL KEYS 14,15
24	Z32990	ELBOW FITTING	AR	- XXXX	X	
25	AZ21974	ELBOW FITTING	1		X	INCL KEYS 16,27
26	Z32987	TEE FITTING	1		X	
27	Z32974	TUBE NUT	AR		X	
28	12M7012	LOCK WASHER	AR		X	6MM
29	14M7027	NUT	AR		X	M6
30	19M7168	CAP SCREW	AR		X	M6X30
31	19M7286	CAP SCREW	AR		X	M6X25
32	AZ21976	ELBOW FITTING	AR		X	INCL KEYS 20,21
33	Z22071	CLAMP	AR		X	

COPYRIGHT©1994 - 2008 DEERE & COMPANY Moline, Illinois All rights reserved

(2C09) HYDRAULIC LINES BETWEEN PUMP AND CONTROL VALVE
CONDUITES ENTRE POMPE ET DISTRIBUTEUR
LEITUNGEN ZWISCHEN PUMPE UND STEUERGERAET
LINEE DALLA POMPA AL DISTRIBUTORE
TUBERIAS DE ACEITE ENTRE BOMBA Y VALVULA DE MANDO
LEDNINGAR FRAN HYDRAULPUMP TILL MANOVERVENTIL

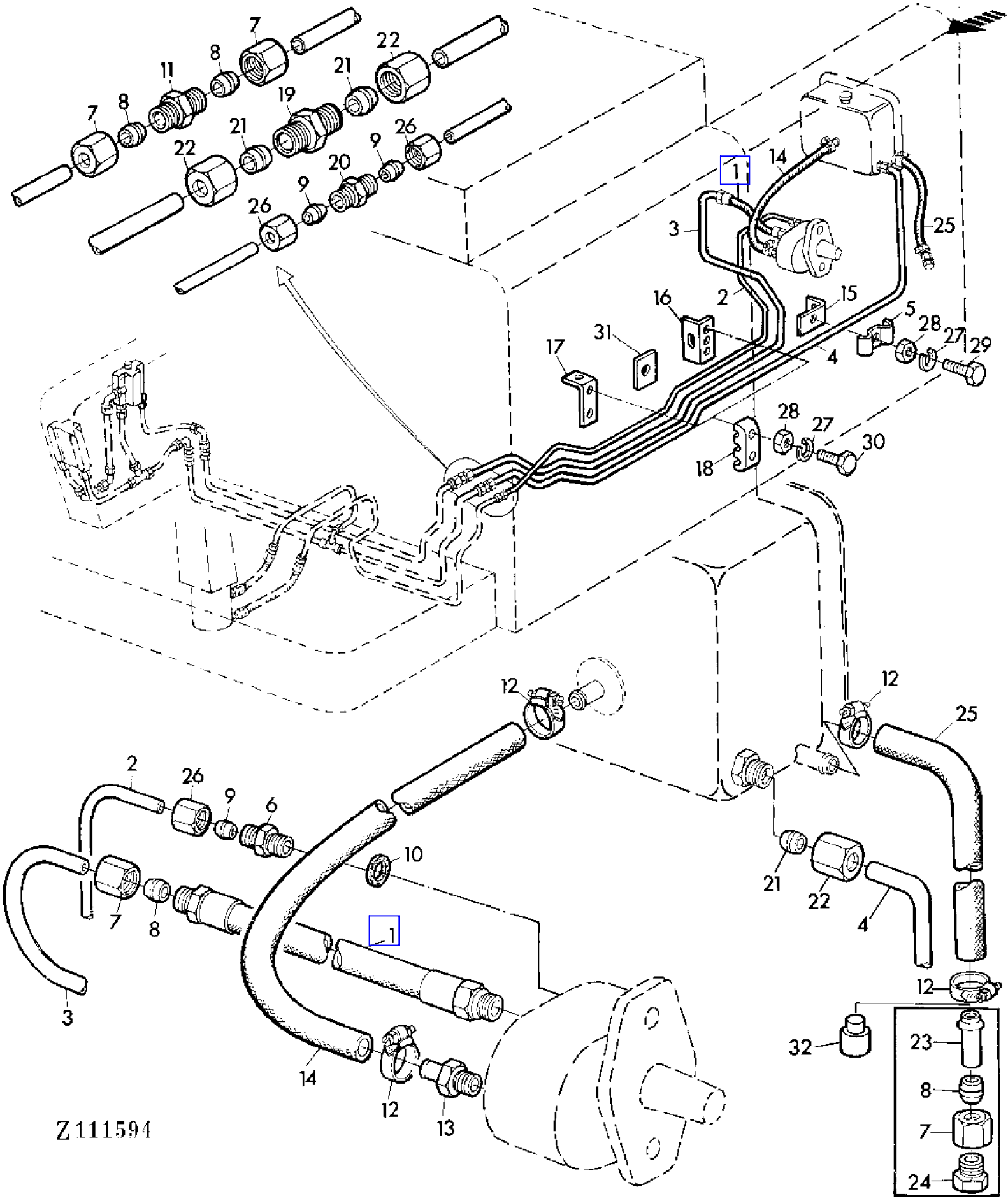

COPYRIGHT©1994 - 2008 DEERE & COMPANY Moline, Illinois All rights reserved

(2C09) HYDRAULIC LINES BETWEEN PUMP AND CONTROL VALVE
CONDUITES ENTRE POMPE ET DISTRIBUTEUR
LEITUNGEN ZWISCHEN PUMPE UND STEUERGERAET
LINEE DALLA POMPA AL DISTRIBUTORE
TUBERIAS DE ACEITE ENTRE BOMBA Y VALVULA DE MANDO
LEDNINGAR FRAN HYDRAULPUMP TILL MANOVERVENTIL

KEY	PART NO.	PART NAME	QTY	SERIAL NO.	955	REMARKS
1	AZ16272	HYDRAULIC HOSE	1		X	
2	AZ22131	OIL LINE	1		X	INCL KEYS 9,26
3	AZ22133	OIL LINE	1		X	INCL KEYS 7,8
4	AZ22237	OIL LINE	1		X	INCL KEYS 21,22
5	Z22061	CLAMP	AR		X	
6	Z32970	ADAPTER	1		X	
7	Z32973	TUBE NUT	AR		X	
8	Z32993	SLEEVE FITTING	AR		X	
9	Z32995	SLEEVE FITTING	AR		X	
10	R26375	O-RING	AR		X	(SUB FOR Z22678)
11	Z32979	UNION FITTING	1		X	
12	Z26822	CLAMP	4		X	
13	Z26824	FITTING	1		X	
14	Z32843	HOSE	1		X	
15	Z42773	LOOM	1		X	(SUB FOR Z27437 APPL)
16	Z44181	ANGLE	1		X	(SUB FOR Z27447)
17	Z27448	ANGLE	1		X	
18	Z27449	CLAMP	2		X	
19	Z32982	UNION FITTING	1		X	
20	Z32978	UNION FITTING	1		X	
21	Z32992	SLEEVE FITTING	AR		X	
22	Z32972	TUBE NUT	AR		X	
23	Z28154	PIPE	1		X	(ORD Z44819)
24	Z28155	PIPE PLUG	1		X	(ORD Z44819)
25	Z46100	HOSE	1		X	(SUB FOR Z28156)
26	Z32974	TUBE NUT	AR		X	
27	12M7012	LOCK WASHER	AR		X	6MM
28	14M7027	NUT	AR		X	M6
29	19M7077	CAP SCREW	1		X	M6X20
30	19M7299	CAP SCREW	2		X	M6X45
31	Z27452	STRAP	1		X	
32	Z44819	PIPE PLUG	1		X	

COPYRIGHT©1994 - 2008 DEERE & COMPANY Moline, Illinois All rights reserved

(2D02) HYDRAULIC LINES FOR 5 AND 6 ROW CORN HEADS
CONDUITES CUEILLEURS A MAIS 5 ET 6 RANGS
HYDRAULIKLEITUNGEN FUER 5 UND 6 REIHIGE MAISPFLUECKVORSAETZE
LINEE IDR. PER TESTATE A MAIS DA 5 E 6 FILE
TUBERIAS DE ACEITE A LOS CABEZALES PARA MAIZ DE 5 Y 6 HILER.
HYDRAULLEDNINGAR FOR 5 OCH 6 RADIGT MAJSAGGREGAT

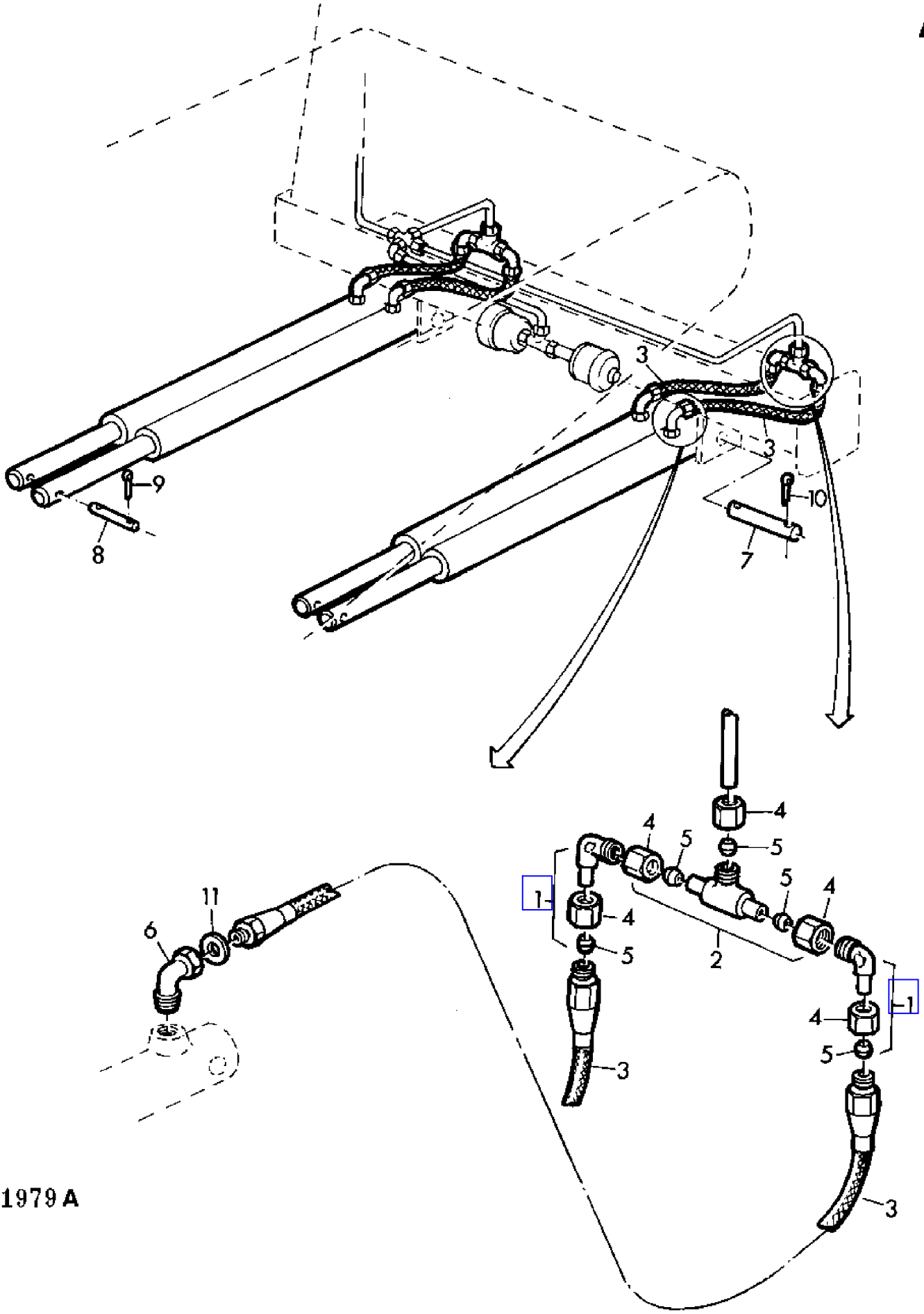

COPYRIGHT©1994 - 2008 DEERE & COMPANY Moline, Illinois All rights reserved

(2D02) HYDRAULIC LINES FOR 5 AND 6 ROW CORN HEADS
CONDUITES CUEILLEURS A MAIS 5 ET 6 RANGS
HYDRAULIKLEITUNGEN FUER 5 UND 6 REIHIGE MAISPFLUECKVORSAETZE
LINEE IDR. PER TESTATE A MAIS DA 5 E 6 FILE
TUBERIAS DE ACEITE A LOS CABEZALES PARA MAIZ DE 5 Y 6 HILER.
HYDRAULLEDNINGAR FOR 5 OCH 6 RADIGT MAJSAGGREGAT

KEY	PART NO.	PART NAME	QTY	SERIAL NO.	955	REMARKS
1	AZ22524	ELBOW FITTING	4		X	INCL KEYS 4,5
2	AZ22525	TEE FITTING	2		X	INCL KEYS 4,5
3	AZ15362	HYDRAULIC HOSE	4		X	
4	Z32971	TUBE NUT	10		X	
5	Z32994	TAPERED SLEEVE	10		X	
6	Z28060	ELBOW FITTING	4		X	
7	Z33440	PIN	2		X	
8	Z33441	PIN	2		X	
9	11M7028	COTTER PIN	4		X	5X35MM
10	11M7030	COTTER PIN	4		X	5X45MM
11	51M4240	RING	4		X	18X22MM

COPYRIGHT©1994 - 2008 DEERE & COMPANY Moline, Illinois All rights reserved

(2D24) HYDRAULIC LINES FOR HYDROSTATIC REEL DRIVE
CONDUITES HYDRAULIQUES POUR ENTRAINEMENT HYDROST.RABATTEUR
HYDRAULIKLEITUNGEN FUER HYDROST.HASPELANTRIEB
LINEE OLIO PER COMANDO IDROSTATICO DELL'ASPO
TUBERIAS PARA EL MANDO HIDROSTATICO DEL MOLINETE
HYDRAULLEDNINGAR FOR HYDROSTATISK HASPELDRIVNING

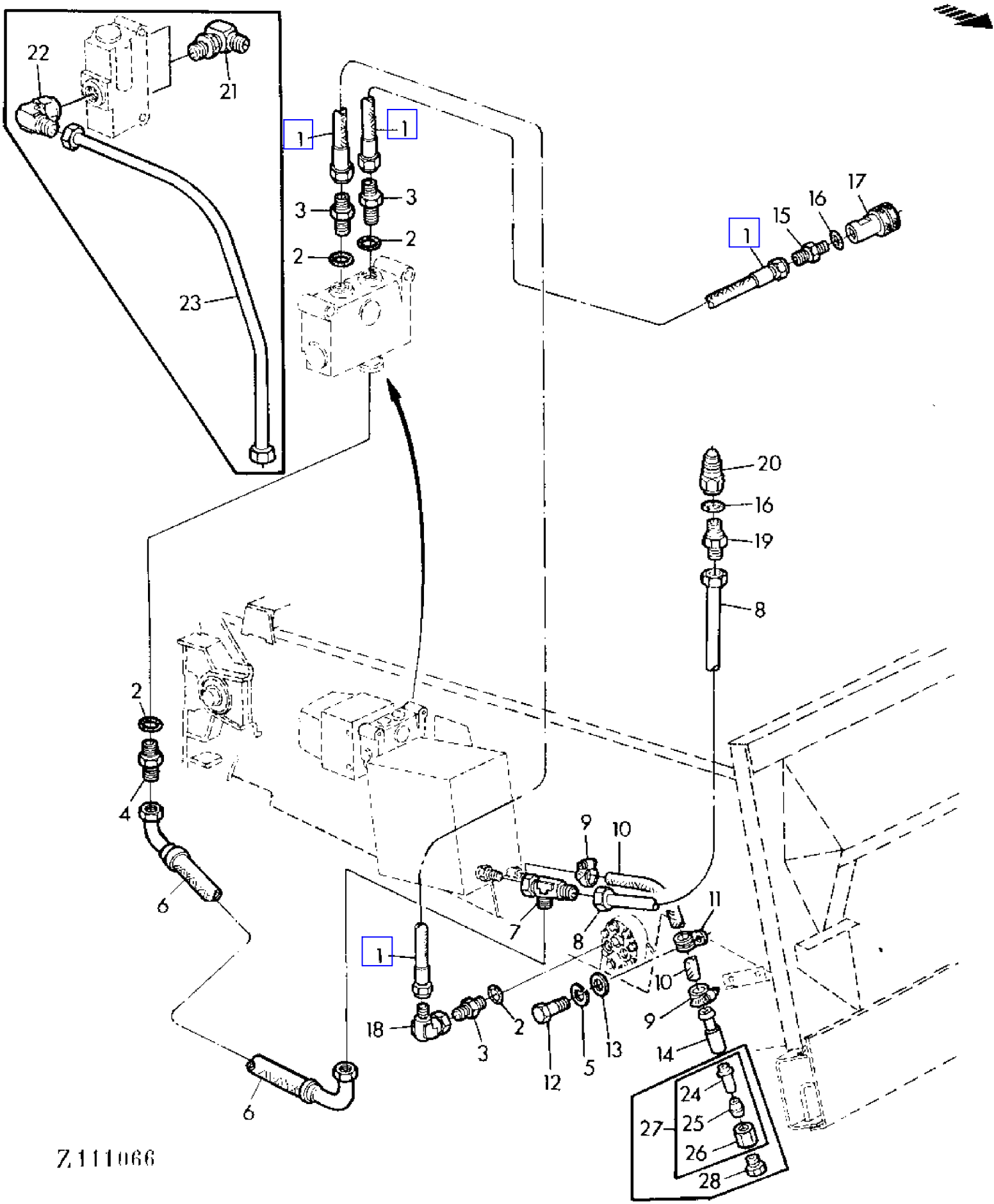

COPYRIGHT©1994 - 2008 DEERE & COMPANY Moline, Illinois All rights reserved

(2D24) HYDRAULIC LINES FOR HYDROSTATIC REEL DRIVE
CONDUITES HYDRAULIQUES POUR ENTRAINEMENT HYDROST.RABATTEUR
HYDRAULIKLEITUNGEN FUER HYDROST.HASPELANTRIEB
LINEE OLIO PER COMANDO IDROSTATICO DELL'ASPO
TUBERIAS PARA EL MANDO HIDROSTATICO DEL MOLINETE
HYDRAULLEDNINGAR FOR HYDROSTATISK HASPELDRIVNING

KEY	PART NO.	PART NAME	QTY	SERIAL NO.	955	REMARKS
1	AZ36655	HYDRAULIC HOSE	2		X	(SUB FOR AZ30094)
2	R26906	O-RING	4		X	
3	R27270	FITTING	3		X	
4	Z37461	FITTING	1		X	
5	12M7008	LOCK WASHER	1		X	8MM
6	AZ36966	HYDRAULIC HOSE	1	045787 -	X	(SUB FOR AZ30097)
7	AZ26403	TEE FITTING	1		X	
8	AZ30152	OIL LINE	1		X	
9	Z26822	CLAMP	2		X	
10	Z46100	HOSE	1		X	(SUB FOR Z28156)
11	AH77924	CLIP	1		X	
12	19M3128	CAP SCREW	1		X	M8X18
13	24M7036	WASHER	1		X	9MM
14	Z44819	PIPE PLUG	1		X	
15	H63597	ADAPTER	1		X	
16	R26375	O-RING	2		X	
17	AH75167	HYD. QUICK-CONNECT COUPLER	1		X	
18	AH77612	ELBOW FITTING	1		X	
19	Z32967	FITTING	1		X	
20	AR94522	INTERNAL HALF COUPLER	1		X	(SUB FOR AH15000)
21	AR26724	ELBOW FITTING	2		X	
22	AZ21976	ELBOW FITTING	1		X	
23	AZ30097	TUBE	1	- 045786	X	(ORD AZ36966)
24	Z28154	PIPE	1		X	(ORD Z44819)
25	Z32993	SLEEVE FITTING	1		X	
26	Z32973	TUBE NUT	1		X	
27	AZ16813	UNION FITTING	1		X	
28	Z28155	PIPE PLUG	1		X	(ORD Z44819)

COPYRIGHT©1994 - 2008 DEERE & COMPANY Moline, Illinois All rights reserved

(2C15) HYDRAULIC LINES(CUTTING PLATFORM)
CONDUITES DE LA PLATE-FORME DE COUPE
HYDRAULIK-LEITUNGEN (SCHNEIDWERK)
LINEE IDRAULICHE(PIATTAFORMA)
TUBERIAS DE ACEITE (PLATAFORMA DE CORTE)
HYDRAULLEDNINGAR(SKARBORD)

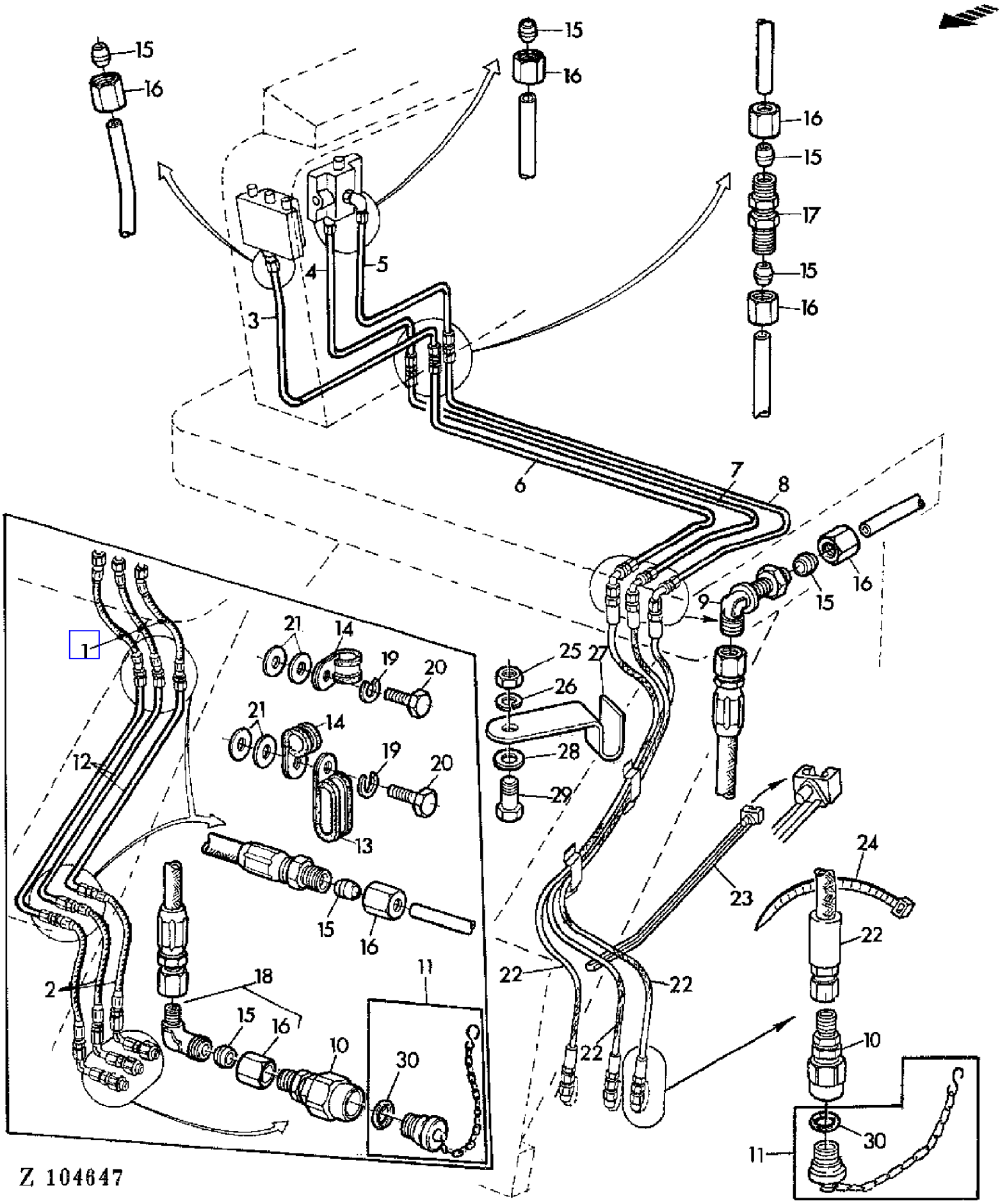

COPYRIGHT©1994 - 2008 DEERE & COMPANY Moline, Illinois All rights reserved

(2C15) HYDRAULIC LINES(CUTTING PLATFORM)
CONDUITES DE LA PLATE-FORME DE COUPE
HYDRAULIK-LEITUNGEN (SCHNEIDWERK)
LINEE IDRAULICHE(PIATTAFORMA)
TUBERIAS DE ACEITE (PLATAFORMA DE CORTE)
HYDRAULLEDNINGAR(SKARBORD)

KEY	PART NO.	PART NAME	QTY	SERIAL NO.		955	REMARKS
1	AZ18453	HYDRAULIC HOSE	3		- 010849	X	
2	AZ18454	HYDRAULIC HOSE	3		- 010849	X	
3	AZ22179	OIL LINE	1			X	INCL KEYS 15,16
4	AZ22191	OIL LINE	1			X	INCL KEYS 15,16
5	AZ22192	OIL LINE	1			X	INCL KEYS 15,16
6	AZ22210	OIL LINE	1			X	INCL KEYS 15,16
7	AZ22211	OIL LINE	1			X	INCL KEYS 15,16
8	AZ22212	OIL LINE	1			X	INCL KEYS 15,16
9	Z32983	ELBOW FITTING	3			X	
10	AZ19455	EXTERNAL HALF COUPLER	3			X	
11	AZ19456	PLUG	3			X	
12	AZ22233	OIL LINE	3		- 010849	X	INCL KEYS 15,16
	AZ22234	OIL LINE	3		- 010849	X	(A) INCL KEYS 15,16
13	Z29819	CLAMP	2		- 010849	X	
14	Z29820	CLAMP	4			X	
15	Z32996	SLEEVE FITTING	AR			X	
16	Z32976	TUBE NUT	AR			X	
17	Z32977	UNION FITTING	3			X	
18	AZ21973	ELBOW FITTING	3		- 010849	X	INCL KEYS 15,16
19	12M7012	LOCK WASHER	6			X	6MM
20	19M7077	CAP SCREW	6			X	M6X20
21	24M7054	WASHER	12			X	6,4MM
22	AZ25301	HYDRAULIC HOSE	3	010850	-	X	LGTH = 2000 MM (SUB FOR AZ27561, AZ27562)
23	Z34568	CLAMP	1	010850	-	X	(SUB FOR Z31798)
24	Z36392	TIE BAND	3	010850	-	X	
25	14M7027	NUT	1			X	M8
26	12M7008	LOCK WASHER	1			X	8MM
27	Z42513	HOLDER	1			X	
28	Z26243	WASHER	1			X	
29	19M7163	CAP SCREW	1			X	M8X25
30	Z29863	O-RING	AR			X	

(A) FOR FEEDER CONVEYOR,LONG
POUR CONVOYEUR D'ALIMENTATION LONG
FUER SCHRAEGFOERDERER,LANG
PER CONVOGLIATORE LUNGO
PARA ELEVADOR DE MIES LARGO
FOR LANG INMATNINGSELEVATOR

COPYRIGHT©1994 - 2008 DEERE & COMPANY Moline, Illinois All rights reserved

(2C13) HYDRAULIC LINES(CUTTING PLATFORM-LIFT CYLINDERS)
CONDUITES DES VERINS DE LA PLATE-FORME DE COUPE
HYDRAULIK-LEITUNGEN (SCHNEIDWERK-HUBZYLINDER)
LINEE IDRAULICHE(CILINDRO SOLLEVAMENTO PIATTAFORMA)
TUBERIAS DE ACEITE (CILINDR.ELEV.DE LA PLATAFORMA DE CORTE)
LEDNINGAR(SKARBORDETS LYFTCYLINDRAR)

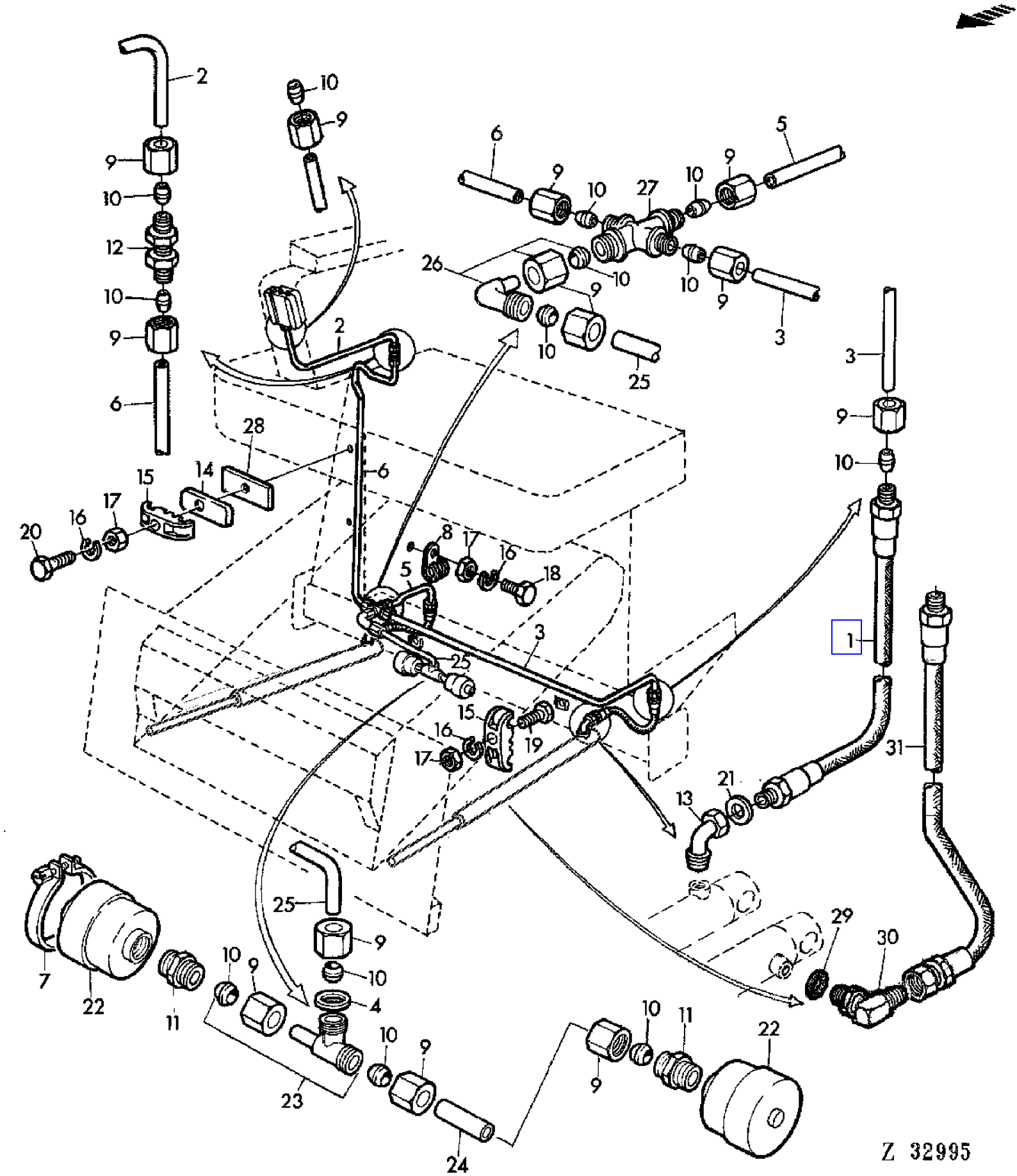

COPYRIGHT©1994 - 2008 DEERE & COMPANY Moline, Illinois All rights reserved

(2C13) HYDRAULIC LINES(CUTTING PLATFORM-LIFT CYLINDERS)
CONDUITES DES VERINS DE LA PLATE-FORME DE COUPE
HYDRAULIK-LEITUNGEN (SCHNEIDWERK-HUBZYLINDER)
LINEE IDRAULICHE(CILINDRO SOLLEVAMENTO PIATTAFORMA)
TUBERIAS DE ACEITE (CILINDR.ELEV.DE LA PLATAFORMA DE CORTE)
LEDNINGAR(SKARBORDETS LYFTCYLINDRAR)

KEY	PART NO.	PART NAME	QTY	SERIAL NO.	955	REMARKS
1	AZ15362	HYDRAULIC HOSE	2		X	(FOR AR90989, AZ37512)
2	AZ22180	OIL LINE	1		X	INCL KEYS 9,10
3	AZ22226	OIL LINE	1		X	INCL KEYS 9,10
4	Z34005	WASHER	1		X	
5	AZ22282	OIL LINE	1		X	INCL KEYS 9,10
6	AZ22238	OIL LINE	1		X	INCL KEYS 9,10
7	Z34000	CLAMP	2		X	
8	Z22064	CLAMP	1		X	
9	Z32971	TUBE NUT	AR		X	
10	Z32994	TAPERED SLEEVE	AR		X	
11	Z33997	HYD. QUICK-CONNECT COUPLER	2		X	
12	Z32980	UNION FITTING	1		X	
13	Z28060	ELBOW FITTING	2		X	(FOR AR90989, AZ37512)
14	Z30667	PLATE	2		X	
15	Z30668	CLAMP	5		X	
16	12M7012	LOCK WASHER	7		X	6MM
17	14M7027	NUT	7		X	M6
18	19M7286	CAP SCREW	2		X	M6X25
19	19M7320	CAP SCREW	3		X	M6X40
20	19M7547	CAP SCREW	2		X	M6X55
21	51M4240	RING	2		X	18X22MM (FOR AR90989, AZ37512)
22	AZ22843	ACCUMULATOR	2		X	
23	AZ22845	FITTING	1		X	INCL KEYS 9,10
24	AZ22846	OIL LINE	1		X	INCL KEYS 9,10
25	AZ22847	OIL LINE	1		X	INCL KEYS 9,10
26	AZ22524	ELBOW FITTING	1		X	INCL KEYS 9,10
27	Z33631	FITTING	1		X	
28	Z36743	PLATE	2		X	
29	R26375	O-RING	2		X	(FOR AR103522, AZ37511)
30	AR26763	ELBOW FITTING	2		X	(FOR AR103522, AZ37511)
31	AZ29901	HYDRAULIC HOSE	2		X	(FOR AR103522, AZ37511)

COPYRIGHT©1994 - 2008 DEERE & COMPANY Moline, Illinois All rights reserved

(2C23) HYDRAULIC LINES(STEERING), STANDARD
CONDUITES DE LA DIRECTION ESSIEV STANDARD
HYDRAULIKLEITUNGEN (LENKUNG), STANDARD-ACHSE
LINEE IDRAULICHE(STERZO), ASSALE NORMALE
TUBERIAS DE ACEITE (DIRECCION), EJE STANDARD
HYDRAULLEDNINGAR(STYRNING), STANDARDAXEL

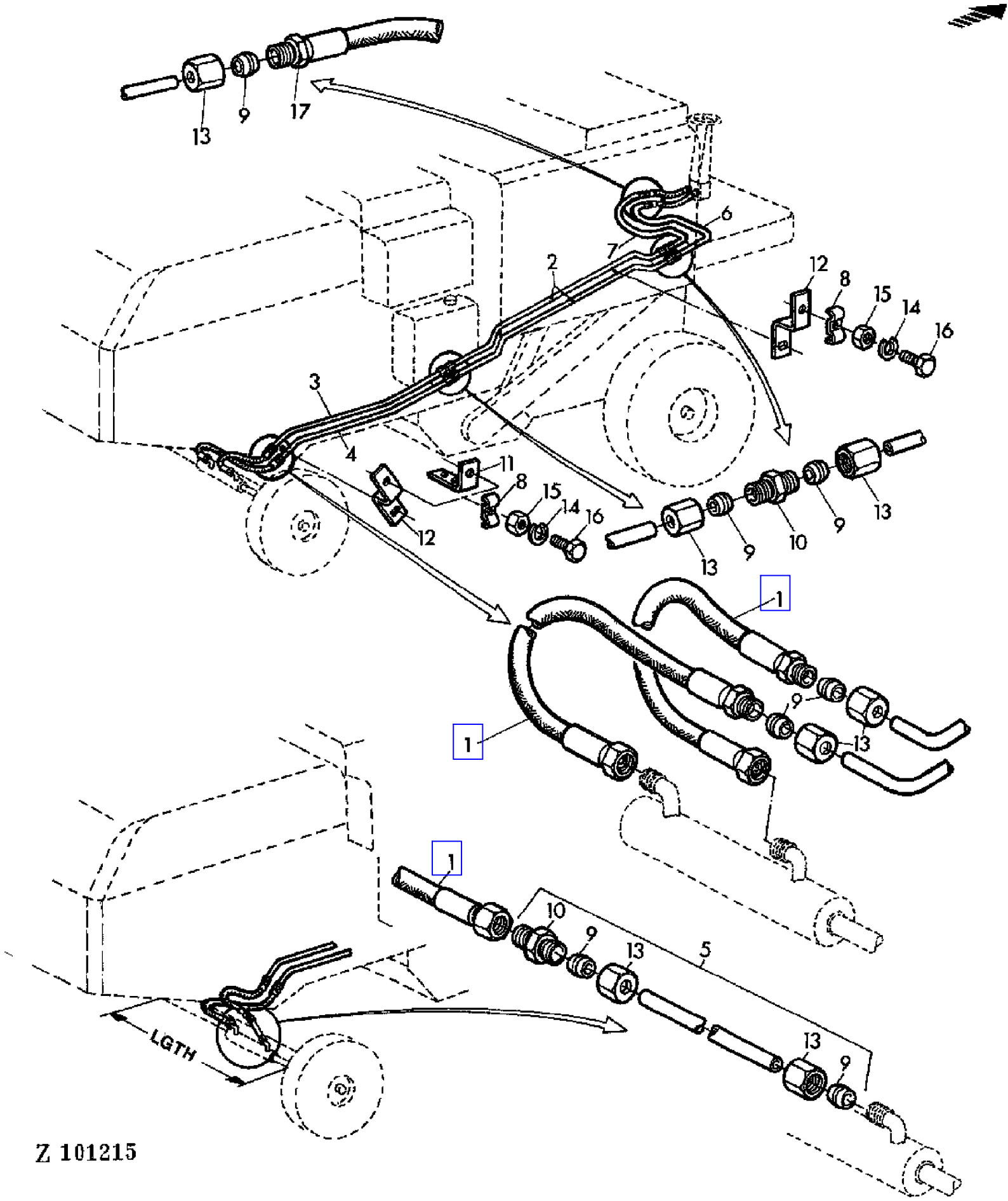

COPYRIGHT©1994 - 2008 DEERE & COMPANY Moline, Illinois All rights reserved

(2C23) HYDRAULIC LINES(STEERING), STANDARD
CONDUITES DE LA DIRECTION ESSIEV STANDARD
HYDRAULIKLEITUNGEN (LENKUNG), STANDARD-ACHSE
LINEE IDRAULICHE(STERZO), ASSALE NORMALE
TUBERIAS DE ACEITE (DIRECCION), EJE STANDARD
HYDRAULLEDNINGAR(STYRNING), STANDARDAXEL

KEY	PART NO.	PART NAME	QTY	SERIAL NO.	955	REMARKS
1	AZ16228	HYDRAULIC HOSE	2		X	
2	AZ22123	OIL LINE	2		X	INCL KEYS 9,13
3	AZ22128	OIL LINE	1		X	INCL KEYS 9,13
4	AZ22129	OIL LINE	1		X	INCL KEYS 9,13
5	AZ22176	OIL LINE	1		X	(A) AR, INCL KEYS 9,10,13
6	AZ22206	OIL LINE	1		X	INCL KEYS 9,13
7	AZ22207	OIL LINE	1		X	INCL KEYS 9,13
8	Z22063	CLAMP	7		X	
9	Z32995	SLEEVE FITTING	AR		X	
10	Z32960	COUPLING	5		X	
11	Z42773	LOOM	2		X	(SUB FOR Z27437 APPL)
12	Z27445	HOLDER	3		X	
13	Z32974	TUBE NUT	AR		X	
14	12M7012	LOCK WASHER	7		X	6MM
15	14M7027	NUT	7		X	M6
16	19M7159	CAP SCREW	7		X	M6X15
17	AZ31463	HYDRAULIC HOSE	2		X	(SUB FOR AZ16228, AZ29328)

(A) ONLY WITH 2276MM (89.61") REAR AXLE
UNIQUEMENT AVEC ESSIEU ARRIERE DE 2276 MM (89.61 IN)
NUR BEI HINTERACHSE MIT 2276MM (89.61 IN.)
SOLO CON ASSALE POSTERIORE DI 2276MM (89.61")
SOLO CON EJE TRASERO DE 2276MM (89.61")
ENDAST VID 2276MM BAKAXEL

COPYRIGHT©1994 - 2008 DEERE & COMPANY Moline, Illinois All rights reserved

(2C21) HYDRAULIC LINES(VARIABLE GROUND SPEED DRIVE)
CONDUITES(VARIATEUR DE DEPLACEMENT)
HYDRAULIKLEITUNGEN (FAHRVARIATOR)
LINEE IDR.(VARIATORE D'AVANZAMENTO)
TUBERIAS DE ACEITE (VARIADOR CONT.DE LA VELOCIDAD DE MARCHA)
HYDRAULLEDNINGAR(KORVARIATOR)

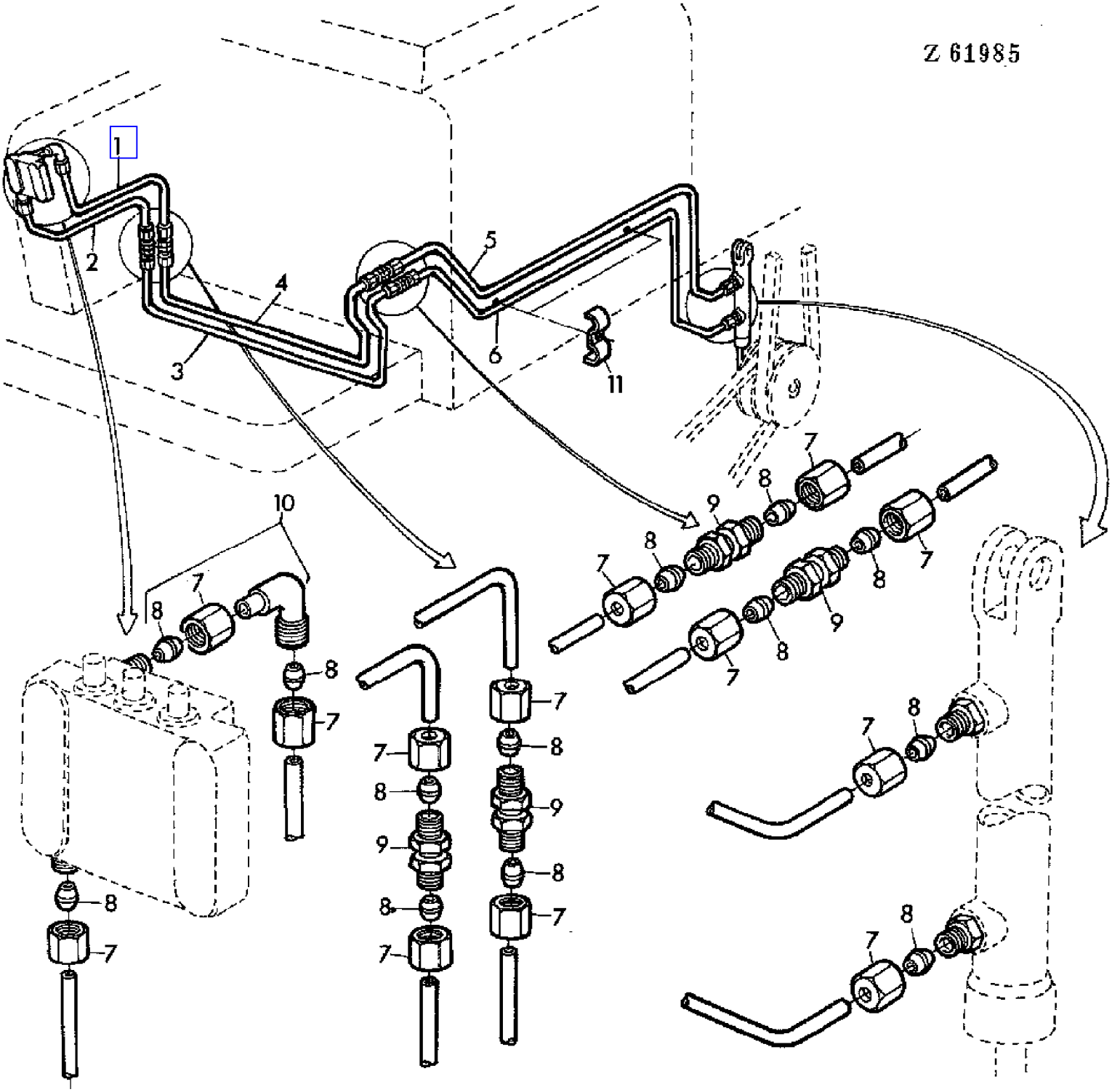

COPYRIGHT©1994 - 2008 DEERE & COMPANY Moline, Illinois All rights reserved

(2C21) HYDRAULIC LINES(VARIABLE GROUND SPEED DRIVE)
CONDUITES(VARIATEUR DE DEPLACEMENT)
HYDRAULIKLEITUNGEN (FAHRVARIATOR)
LINEE IDR.(VARIATORE D'AVANZAMENTO)
TUBERIAS DE ACEITE (VARIADOR CONT.DE LA VELOCIDAD DE MARCHA)
HYDRAULLEDNINGAR(KORVARIATOR)

KEY	PART NO.	PART NAME	QTY	SERIAL NO.	955	REMARKS
1	AZ22177	OIL LINE	1		X	INCL KEYS 7,8
2	AZ22178	OIL LINE	1		X	INCL KEYS 7,8
3	AZ22208	OIL LINE	1		X	INCL KEYS 7,8
4	AZ22209	OIL LINE	1		X	INCL KEYS 7,8
5	AZ23782	OIL LINE	1		X	INCL KEYS 7,8
6	AZ23783	OIL LINE	1		X	INCL KEYS 7,8
7	Z32975	TUBE NUT	14		X	
8	Z32997	SLEEVE FITTING	14		X	
9	Z32981	UNION FITTING	4		X	
10	AZ21972	ELBOW FITTING	1		X	INCL KEYS 7,8
11	Z22268	CLAMP	2		X	

COPYRIGHT©1994 - 2008 DEERE & COMPANY Moline, Illinois All rights reserved

(2C10) HYDRAULIC LINES,FRONT
CONDUITES HYDRAULIQUES AVANT
HYDRAULIKLEITUNGEN VORN
LINEE IDRAULICHE ANTERIORI
TUBERIAS DELANTERAS
HYDRAULLEDNINGAR,FRAMRE

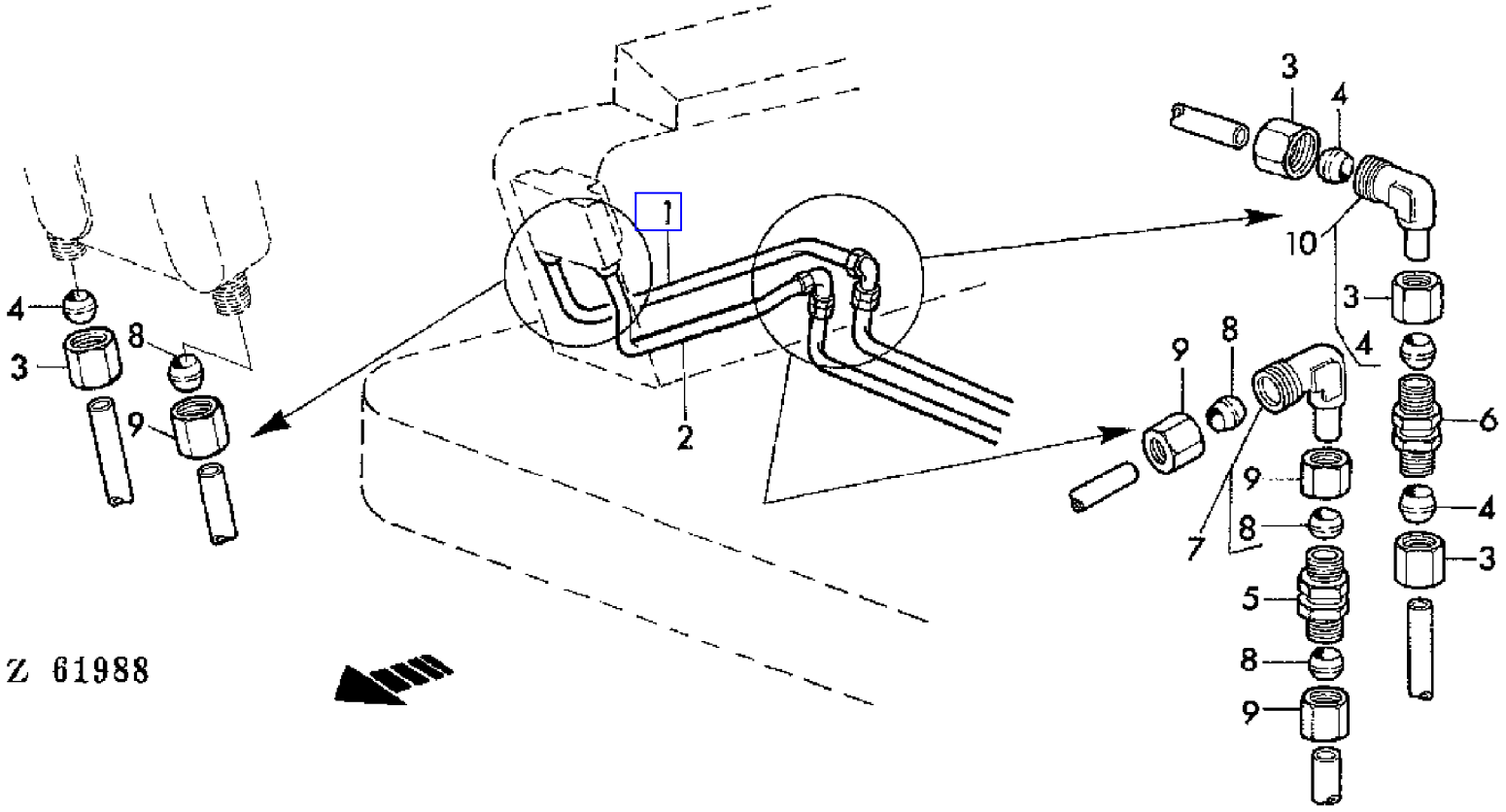

COPYRIGHT©1994 - 2008 DEERE & COMPANY Moline, Illinois All rights reserved

(2C10) HYDRAULIC LINES,FRONT
CONDUITES HYDRAULIQUES AVANT
HYDRAULIKLEITUNGEN VORN
LINEE IDRAULICHE ANTERIORI
TUBERIAS DELANTERAS
HYDRAULLEDNINGAR,FRAMRE

KEY	PART NO.	PART NAME	QTY	SERIAL NO.	955	REMARKS
1	AZ22183	OIL LINE	1		X	INCL KEYS 3,4
2	AZ22184	OIL LINE	1		X	INCL KEYS 8,9
3	Z32973	TUBE NUT	AR		X	
4	Z32993	SLEEVE FITTING	AR		X	
5	Z32979	UNION FITTING	1		X	
6	Z32983	ELBOW FITTING	1		X	
7	AZ21976	ELBOW FITTING	1		X	INCL KEYS 8,9
8	Z32992	SLEEVE FITTING	AR		X	
9	Z32972	TUBE NUT	AR		X	
10	AZ21975	ELBOW FITTING	1		X	INCL KEYS 3,4

COPYRIGHT©1994 - 2008 DEERE & COMPANY Moline, Illinois All rights reserved

(2A13) HYDRAULIC OIL RESERVOIR
RESERVOIR HUILE HYDRAULIQUE
HYDRAULIK-OELBEHAELTER
SERBATOIO OLIO IDRAULICO
DEPOSITO DE ACEITE HIDRAULICO
HYDRAULOLJETANK

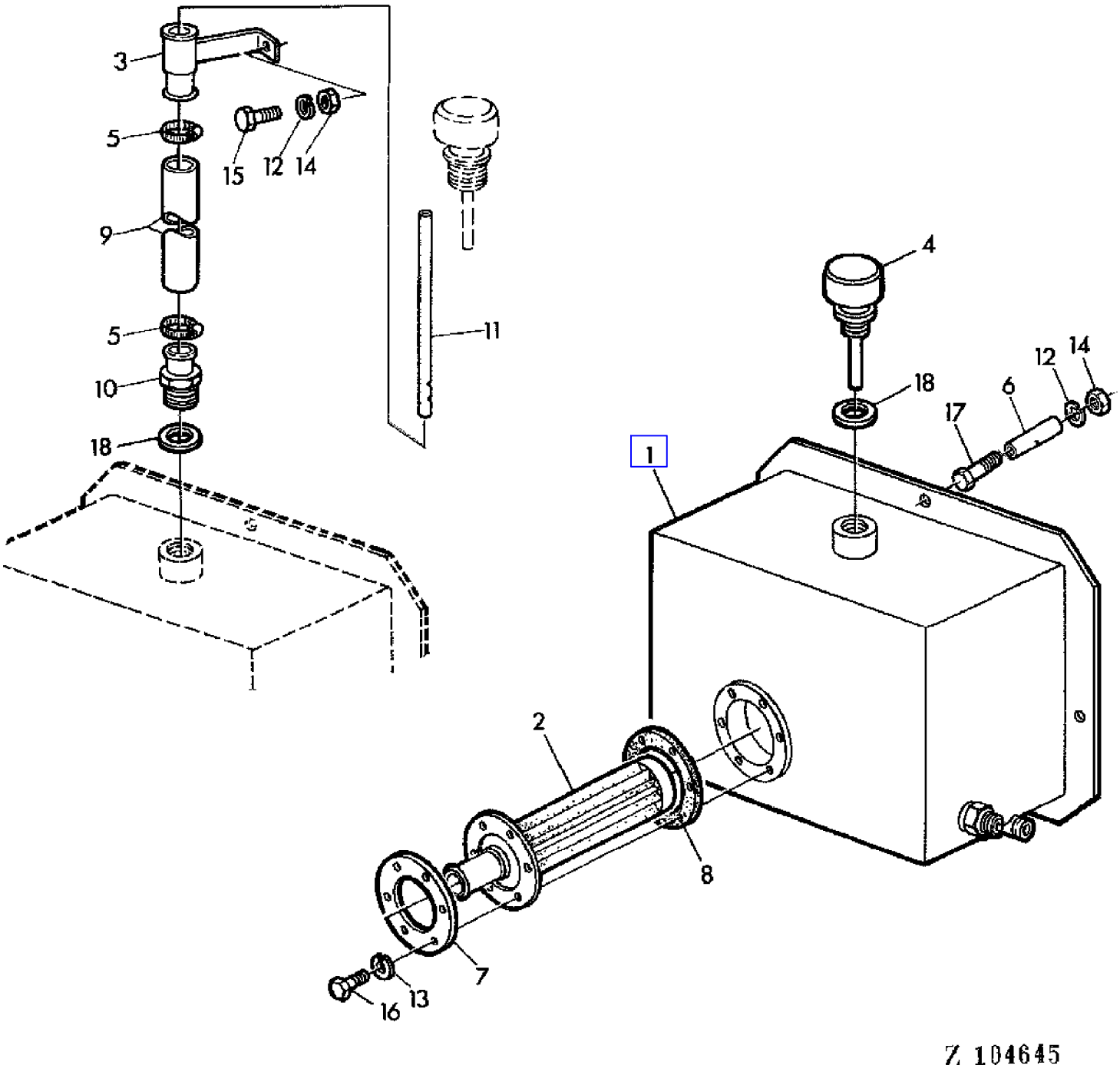

COPYRIGHT©1994 - 2008 DEERE & COMPANY Moline, Illinois All rights reserved

(2A13) HYDRAULIC OIL RESERVOIR
RESERVOIR HUILE HYDRAULIQUE
HYDRAULIK-OELBEHAELTER
SERBATOIO OLIO IDRAULICO
DEPOSITO DE ACEITE HIDRAULICO
HYDRAULOLJETANK

KEY	PART NO.	PART NAME	QTY	SERIAL NO.	955	REMARKS
1	AZ32229	HYDRAULIC RESERVOIR	1		X	(SUB FOR AZ15811)
2	AZ15812	FILTER	1		X	
3	AZ20579	BRACKET	1		X	
4	AL17552	BREATHER	1		X	
5	Z21160	CLAMP	2		X	
6	Z24242	SPACER	4		X	
7	Z26827	WASHER	1		X	
8	Z26828	GASKET	1		X	
9	Z31889	HOSE	1		X	
10	Z31890	HOSE FITTING	1		X	
11	Z31892	DIPSTICK	1		X	
12	12M7008	LOCK WASHER	4		X	M8
13	12M7012	LOCK WASHER	6		X	6MM
14	14M7029	NUT	4		X	8MM
15	19M7139	CAP SCREW	1		X	M8X20
16	19M7159	CAP SCREW	6		X	M6X15
17	19M7162	CAP SCREW	4		X	M8X55
18	51M4247	RING	1		X	30X36MM

COPYRIGHT©1994 - 2008 DEERE & COMPANY Moline, Illinois All rights reserved

(2D06) HYDRAULIC OIL RESERVOIR FOR HYDROSTATIC REEL DRIVE
RESERVOIR(ENTRAINEMENT HYDROSTATIQUE DU RABATTEUR)
HYDRAULIKOELTANK FUER HYDROSTATISCHEN HASPELANTRIEB
SERBATOIO OLIO IDR. PER COMANDO IDROSTATICO DELL'ASPO
DEPOSITO DE ACEITE PARA ACCIONAMIENTO HIDROSTAT.DEL MOLINETE
HYDRAULOLJETANK FOR HYDROSTATISKT HASPELDRIVNING

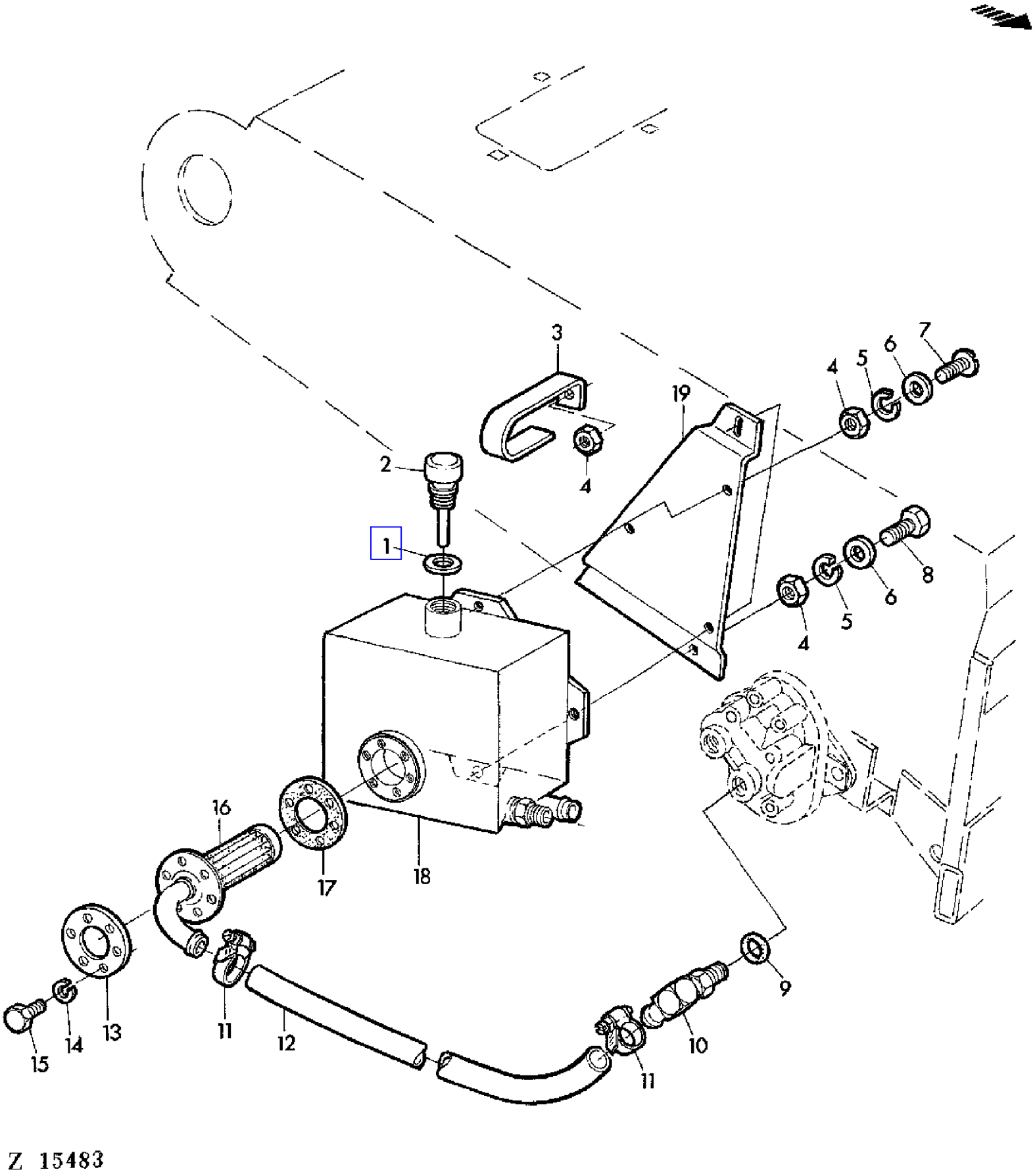

COPYRIGHT©1994 - 2008 DEERE & COMPANY Moline, Illinois All rights reserved

(2D06) HYDRAULIC OIL RESERVOIR FOR HYDROSTATIC REEL DRIVE
RESERVOIR(ENTRAINEMENT HYDROSTATIQUE DU RABATTEUR)
HYDRAULIKOELTANK FUER HYDROSTATISCHEN HASPELANTRIEB
SERBATOIO OLIO IDR. PER COMANDO IDROSTATICO DELL'ASPO
DEPOSITO DE ACEITE PARA ACCIONAMIENTO HIDROSTAT.DEL MOLINETE
HYDRAULOLJETANK FOR HYDROSTATISKT HASPELDRIVNING

KEY	PART NO.	PART NAME	QTY	SERIAL NO.	955	REMARKS
1	51M4247	RING	1		X	
2	AL17552	BREATHER	1		X	
3	Z36072	HOLDER	1		X	
4	14M7029	NUT	AR		X	M8
5	12M7008	LOCK WASHER	AR		X	8MM
6	24M7036	WASHER	AR		X	9MM
7	19M7139	CAP SCREW	AR		X	M8X20
8	19M7163	CAP SCREW	AR		X	M8X25
9	U12547	O-RING	1		X	
10	AR68999	ELBOW FITTING	1		X	
11	Z26822	CLAMP	2		X	
12	Z51546	HYDRAULIC HOSE	1		X	(SUB FOR Z36049)
13	Z26827	WASHER	1		X	
14	12M7012	LOCK WASHER	AR		X	6MM
15	19M7077	CAP SCREW	AR		X	M6X20
16	AZ25027	FILTER	1		X	
17	Z26828	GASKET	1		X	
18	AZ32229	HYDRAULIC RESERVOIR	1		X	(SUB FOR AZ15811)
19	Z36558	HOLDER	1		X	

COPYRIGHT©1994 - 2008 DEERE & COMPANY Moline, Illinois All rights reserved

(2A19) HYDRAULIC PUMP CESSNA TYP 200100 LHB
POMPE HYDRAULIQUE CESSNA TYP 200100 LHB
HYDRAULIKPUMPE CESSNA TYP 200100 LHB
POMPA IDRAULICA CESSNA TYP 200100 LHB
BOMBA HIDRAULICA CESSNA TYPO 200100 LHB
HYDRAULPUMP CESSNA TYP 200100 LHB

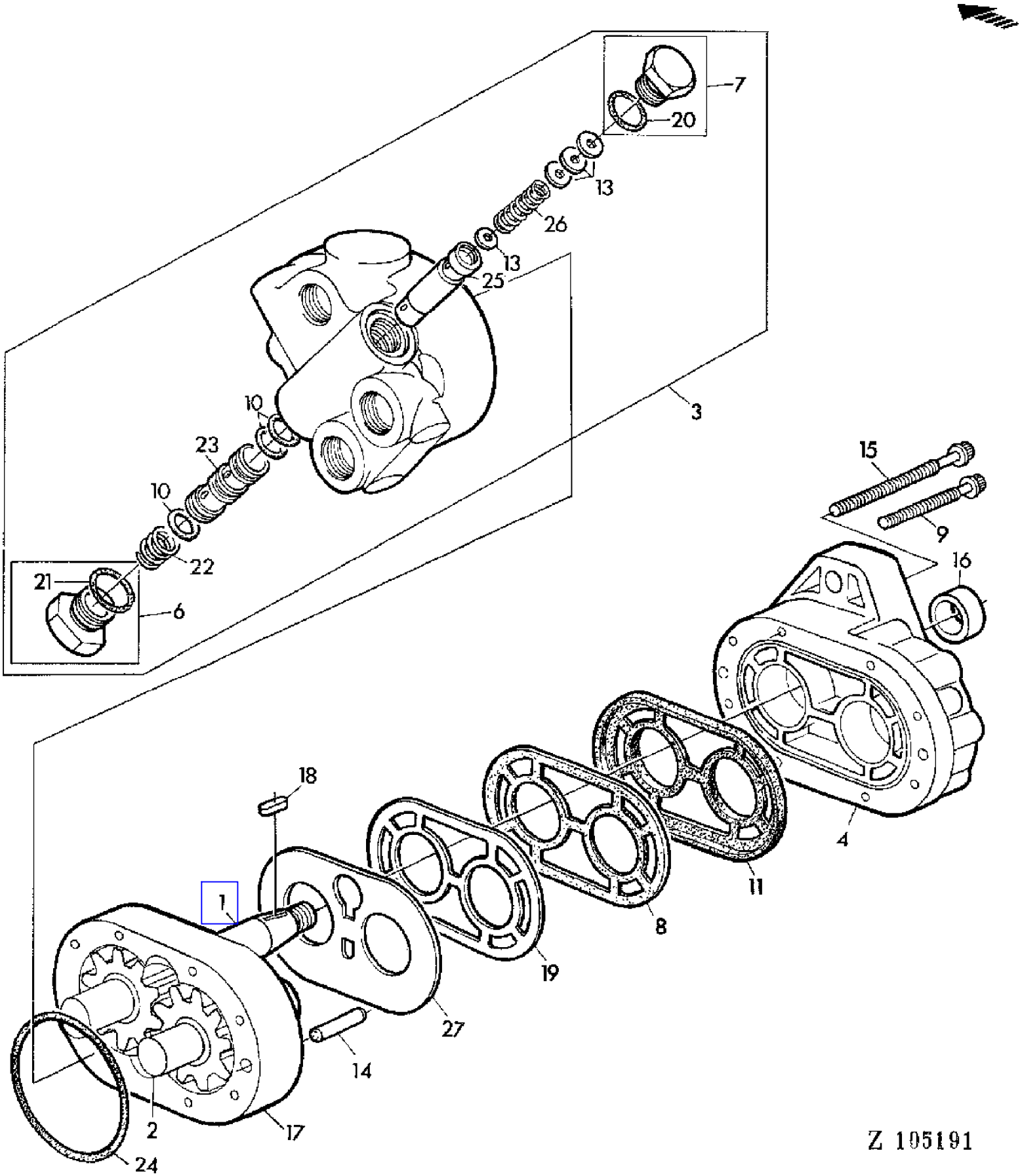

COPYRIGHT©1994 - 2008 DEERE & COMPANY Moline, Illinois All rights reserved

(2A19) HYDRAULIC PUMP CESSNA TYP 200100 LHB
POMPE HYDRAULIQUE CESSNA TYP 200100 LHB
HYDRAULIKPUMPE CESSNA TYP 200100 LHB
POMPA IDRAULICA CESSNA TYP 200100 LHB
BOMBA HIDRAULICA CESSNA TYPO 200100 LHB
HYDRAULPUMP CESSNA TYP 200100 LHB

KEY	PART NO.	PART NAME	QTY	SERIAL NO.		955	REMARKS
1	.....	GEAR	1	029968	-	X	(ORD AZ21283)
2	.....	GEAR	1	029968	-	X	(ORD AZ21283)
3	AZ25776	FLOW DIVIDER	1	029968	-	X	INCL KEYS 6,7,10,13,20-23,25,26
4	AZ19696	HOUSING	1	029968	-	X	
5	AZ25775	HYDRAULIC PUMP	1	029968	-	X	INCL KEYS 1-28
6	AH19265	FITTING	1	029968	-	X	INCL KEY 21
7	AE35771	DRAIN PLUG	1	029968	-	X	INCL KEY 20 (SUB FOR AH19266)
8	.....	GASKET	1	029968	-	X	(ORD AZ19697)
9	H30972	BOLT	4	029968	-	X	
10	H30843	O-RING	AR	029968	-	X	
11	.....	GASKET	1	029968	-	X	(ORD AZ19697)
12	T18628	WASHER	AR	029968	-	X	TK = 1,65 MM 0.065"
13	H63358	ORIFICE	1	029968	-	X	
14	H80815	PIN	2	029968	-	X	
15	Z31037	SCREW	4	029968	-	X	
16	Z31038	SEAL	1	029968	-	X	
17	Z31040	HOUSING	1	029968	-	X	
18	N34986	SHAFT KEY	1	029968	-	X	
19	.....	GASKET	1	029968	-	X	(ORD AZ19697)
20	U40745	O-RING	1	029968	-	X	(SUB FOR R375R)
21	N130510	O-RING	1	029968	-	X	(SUB FOR 32240A)
22	T19972	SPRING	1	029968	-	X	
23	.....	PLUNGER	1	029968	-	X	(ORD AZ21284)
24	.....	O-RING	1	029968	-	X	(ORD AZ19697)
25	.....	PLUNGER	1	029968	-	X	(ORD AZ21284)
26	E46836	SPRING	1	029968	-	X	
27	.....	DIAPHRAGM	1	029968	-	X	(ORD AZ19697)
..	AZ19697	GASKET KIT	1	029968	-	X	INCL KEYS 11,12,16,19-21,24,27,28
..	AZ21283	GEAR	1	029968	-	X	KIT, INCL KEYS 1,2
..	AZ21284	PLUNGER	1	029968	-	X	KIT, INCL KEYS 10,23,25

COPYRIGHT©1994 - 2008 DEERE & COMPANY Moline, Illinois All rights reserved

(2A17) HYDRAULIC PUMP CESSNA TYP 24335 LAB
POMPE HYDRAULIQUE CESSNA TYP 24335 LAB
HYDRAULIKPUMPE CESSNA TYP 24335 LAB
POMPA IDRAULICA CESSNA TYP 24335 LAB
POMPA HIDRAULICA CESSNA TYP 24335 LAB
HYDRAULPUMP

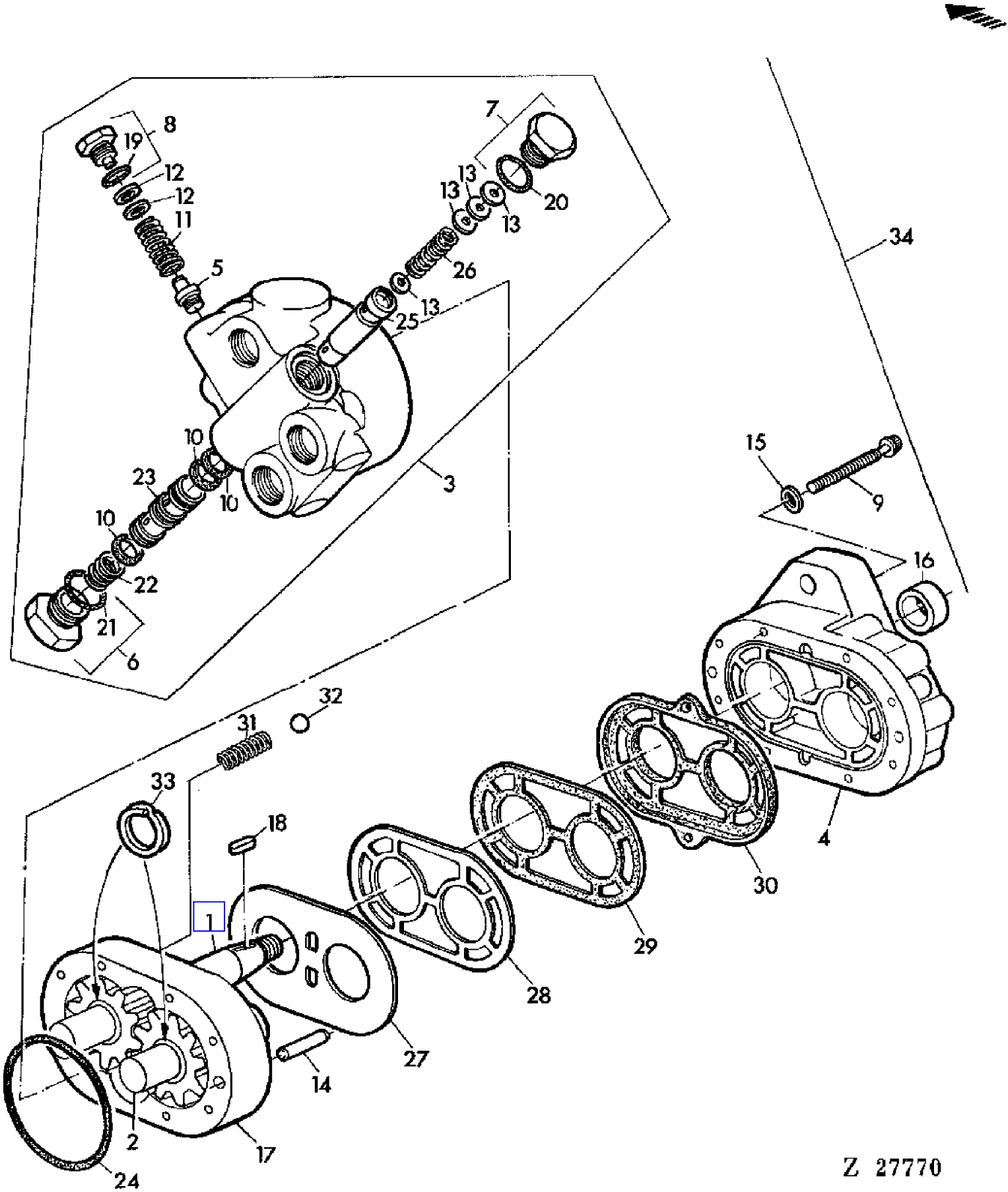

COPYRIGHT©1994 - 2008 DEERE & COMPANY Moline, Illinois All rights reserved

(2A17) HYDRAULIC PUMP CESSNA TYP 24335 LAB
POMPE HYDRAULIQUE CESSNA TYP 24335 LAB
HYDRAULIKPUMPE CESSNA TYP 24335 LAB
POMPA IDRAULICA CESSNA TYP 24335 LAB
POMPA HIDRAULICA CESSNA TYP 24335 LAB
HYDRAULPUMP

KEY	PART NO.	PART NAME	QTY	SERIAL NO.	955	REMARKS
1	AZ17510	GEAR	1	- 029967	X	
2	AT12109	GEAR	1	- 029967	X	
3	AZ19695	FLOW DIVIDER	1	- 029967	X	INCL KEYS 5-8,10-13,19-23,25,26
4	AH17973	HOUSING	1	- 029967	X	
5	AH18137	POPPET	1	- 029967	X	
6	AH19265	FITTING	1	- 029967	X	INCL KEY 21
7	AE35771	DRAIN PLUG	1	- 029967	X	INCL KEY 20 (SUB FOR AH19266)
8	AN122335	FITTING	1	- 029967	X	(SUB FOR AH20807)
9	H30972	BOLT	8	- 029967	X	
10	H30843	O-RING	AR	- 029967	X	
11	H31256	SPRING	1	- 029967	X	
12	H31257	SHIM	AR	- 029967	X	TK = 0,25 MM 0.010"
	T18628	WASHER	AR	- 029967	X	TK = 1,65 MM 0.065"
13	H63358	ORIFICE	AR	- 029967	X	
14	H80815	PIN	2	- 029967	X	
15	H30973	WASHER	8	- 029967	X	
16	AH15442	SEAL	1	- 029967	X	
17	H80822	HOUSING	1	- 029967	X	INCL KEY 14
18	N34986	SHAFT KEY	1	- 029967	X	
19	P46051	O-RING	1	- 029967	X	
20	U40745	O-RING	1	- 029967	X	(SUB FOR R375R)
21	N130510	O-RING	1	- 029967	X	(SUB FOR 32340A)
22	T19972	SPRING	1	- 029967	X	
23	.....	PLUNGER	1	- 029967	X	(ORD AZ19695)
24	H80821	O-RING	1	- 029967	X	
25	.....	PLUNGER	1	- 029967	X	(ORD AZ19695)
26	E46836	SPRING	1	- 029967	X	
27	.....	DIAPHRAGM	1	- 029967	X	(ORD AH66648)
28	.....	GASKET	1	- 029967	X	(ORD AH66648)
29	.....	GASKET	1	- 029967	X	(ORD AH66648)
30	.....	GASKET	1	- 029967	X	(ORD AH66648)
31	H22695	SPRING	2	- 029967	X	
32	H22694	BALL	2	- 029967	X	
33	T12960	SNAP RING	4	- 029967	X	(SUB FOR Z33137)
34	AH62124	HYDRAULIC PUMP	1	- 029967	X	(ORD AZ19692)
..	AH66648	KIT	1	- 029967	X	KIT, INCL KEYS 16,19-21,24,27-32 (SUB FOR AE27937)

COPYRIGHT©1994 - 2008 DEERE & COMPANY Moline, Illinois All rights reserved

(2D04) HYDRAULIC PUMP FOR HYDROSTATIC REEL DRIVE
POMPE DE L'ENTRAINEMENT HYDROSTATIQUE DU RABATTEUR
HYDRAULIKPUMPE FUER HYDROSTATISCHEN HASPELANTRIEB
POMPA IDRAULICA PER COMANDO IDROSTATICO DELL'ASPO
BOMBA HIDR.PARA ACCIONAMIENTO HIDROSTATICO DEL MOLINETE
HYDRAULPUMP FOR HYDROSTATISKT HASPELDRIVNING

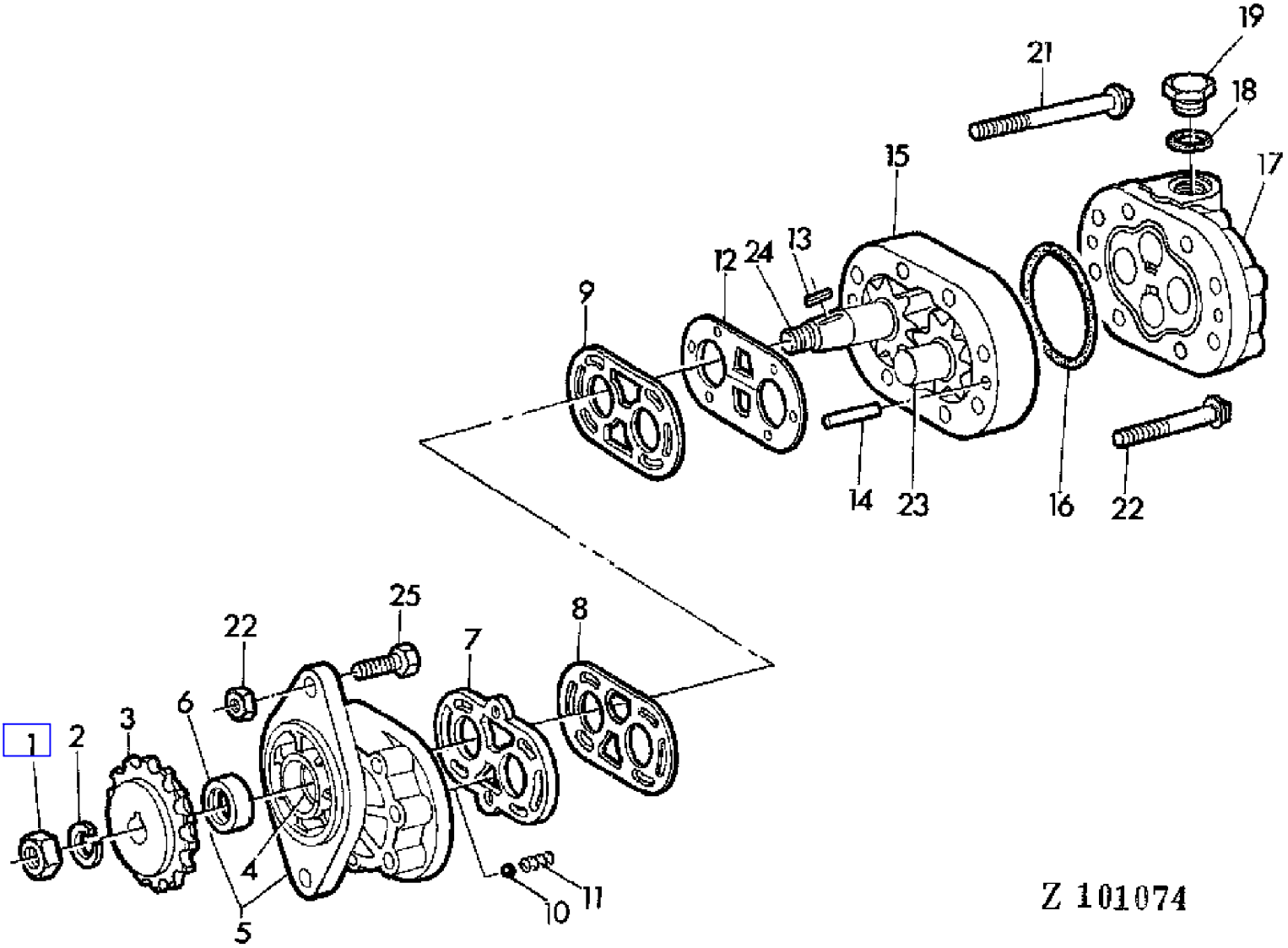

COPYRIGHT©1994 - 2008 DEERE & COMPANY Moline, Illinois All rights reserved

(2D04) HYDRAULIC PUMP FOR HYDROSTATIC REEL DRIVE
POMPE DE L'ENTRAINEMENT HYDROSTATIQUE DU RABATTEUR
HYDRAULIKPUMPE FUER HYDROSTATISCHEN HASPELANTRIEB
POMPA IDRAULICA PER COMANDO IDROSTATICO DELL'ASPO
BOMBA HIDR.PARA ACCIONAMIENTO HIDROSTATICO DEL MOLINETE
HYDRAULPUMP FOR HYDROSTATISKT HASPELDRIVNING

KEY	PART NO.	PART NAME	QTY	SERIAL NO.	955	REMARKS
1	14H812	NUT	1		X	3/8"
2	12M7013	LOCK WASHER	1		X	10MM
3	Z36048	CHAIN SPROCKET	1		X	Z = 19
4	.....	HOUSING	1		X	NSEP (ORD AT12111)
5	AT12111	HOUSING	1		X	INCL KEY 4
6	AH15442	SEAL	1		X	NSEP (ORD AH66648)
7	.....	GASKET	1		X	NSEP (ORD AH66648)
8	.....	GASKET	1		X	NSEP (ORD AH66648)
9	.....	GASKET	1		X	NSEP (ORD AH66648)
10	.....	BALL	2		X	NSEP (ORD AH66648)
11	.....	SPRING	2		X	NSEP (ORD AH66648)
12	.....	DIAPHRAGM	1		X	NSEP (ORD AH66648)
13	N34986	SHAFT KEY	1		X	
14	E61860	DOWEL PIN	2		X	(SUB FOR H65662)
15	H65661	HOUSING	1		X	
16	.....	O-RING	1		X	NSEP (ORD AH66648)
17	AH66645	PLATE	1		X	
18	R28782	O-RING	1		X	
19	R51031	FITTING	1		X	(ORD W/ R28782) (SUB FOR AH63282)
20	T12966	CAP SCREW	4		X	5/16"X3"
21	H63061	BOLT	4		X	5/16"X3-1/4"
22	Z26792	NUT	2		X	10MM
23	AH66646	GEAR	1		X	
24	AE36861	STEERING GEAR	1		X	(SUB FOR AH66647)
25	19M7168	CAP SCREW	2		X	M10X30
..	AH66400	HYDRAULIC PUMP	1		X	ASSY, INCL KEYS 1,2,4-19,23,24
..	AH66648	KIT	1		X	KIT, INCL KEYS 6-12,16

COPYRIGHT©1994 - 2008 DEERE & COMPANY Moline, Illinois All rights reserved

(2A15) HYDRAULIC PUMP-TYPE CESSNA 200100LBE
POMPE HYDRAULIQUE CESSNA TYPE 200100LBE
HYDRAULIKPUMPE CESSNA TYP 200100LBE
POMPA IDRAULICA CESSNA TIPO 200100LBE
BOMBA HIDRAULICA CESSNA TIPO 200100LBE
HYDRAULPUMP CESSNA 200100LBE

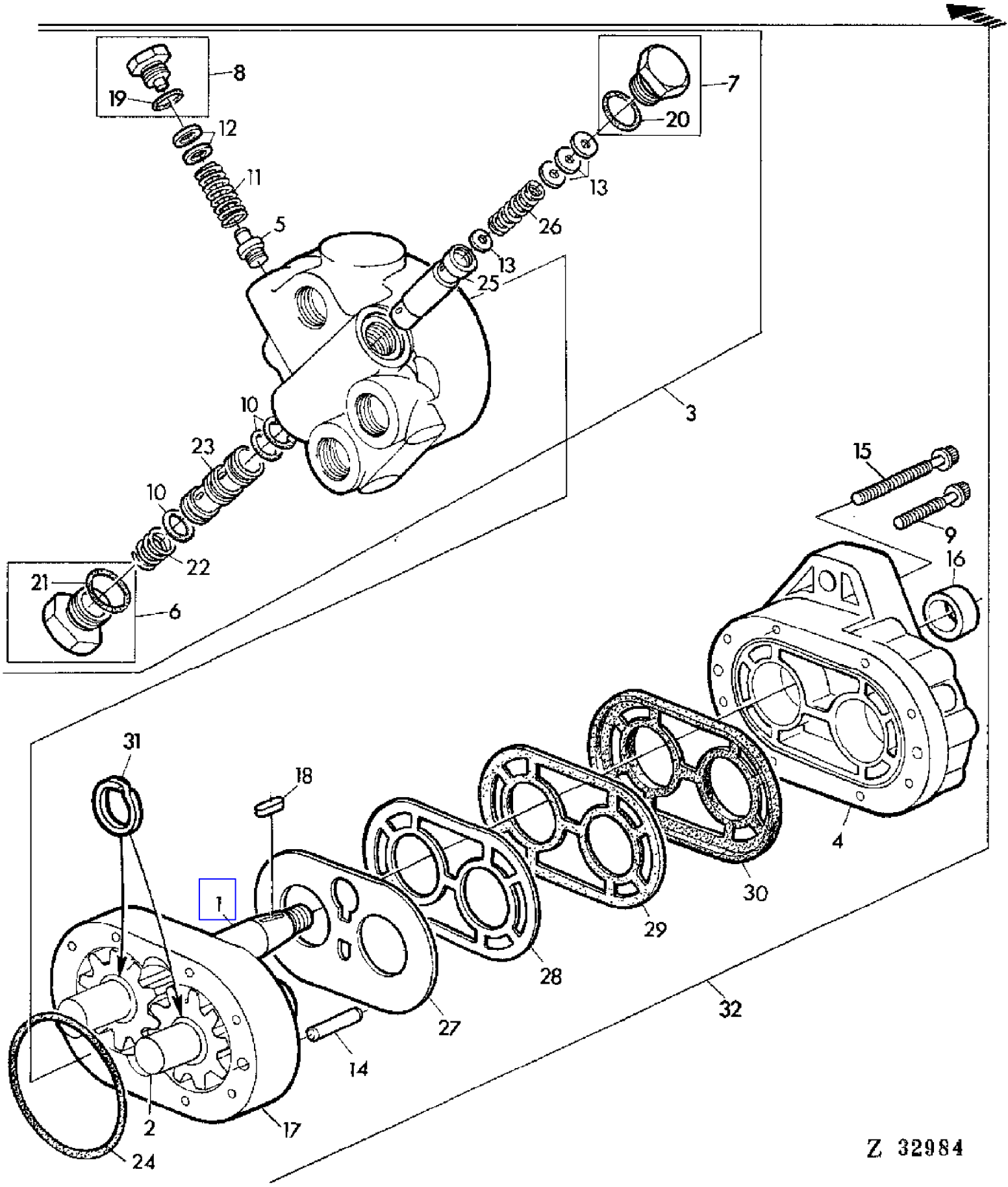

COPYRIGHT©1994 - 2008 DEERE & COMPANY Moline, Illinois All rights reserved

(2A15) HYDRAULIC PUMP-TYPE CESSNA 200100LBE
POMPE HYDRAULIQUE CESSNA TYPE 200100LBE
HYDRAULIKPUMPE CESSNA TYP 200100LBE
POMPA IDRAULICA CESSNA TIPO 200100LBE
BOMBA HIDRAULICA CESSNA TIPO 200100LBE
HYDRAULPUMP CESSNA 200100LBE

KEY	PART NO.	PART NAME	QTY	SERIAL NO.		955	REMARKS
1	.....	GEAR	1	-	029967	X	(ORD AZ21283)
2	.....	GEAR	1	-	029967	X	(ORD AZ21283)
3	AZ19695	FLOW DIVIDER	1	-	029967	X	ASSY, INCL KEYS 5-8,10-13,19-23,25,26
4	AZ19696	HOUSING	1	-	029967	X	
5	AZ19698	POPPET	1	-	029967	X	
6	AH19265	FITTING	1	-	029967	X	INCL KEY 21
7	AE35771	DRAIN PLUG	1	-	029967	X	INCL KEY 20 (SUB FOR AH19266)
8	AN122335	FITTING	1	-	029967	X	(SUB FOR AH20807)
9	H30972	BOLT	4	-	029967	X	
10	H30843	O-RING	3	-	029967	X	
11	H31256	SPRING	1	-	029967	X	(SUB FOR H60817)
12	H31257	SHIM	AR	-	029967	X	TK = 0,25 MM 0.010"
	T18628	WASHER	AR	-	029967	X	TK = 1,65 MM 0.065"
13	H63358	ORIFICE	1	-	029967	X	
14	H80815	PIN	2	-	029967	X	
15	Z31037	SCREW	4	-	029967	X	
16	Z31038	SEAL	1	-	029967	X	
17	Z31040	HOUSING	1	-	029967	X	
18	N34986	SHAFT KEY	1	-	029967	X	
19	P46051	O-RING	1	-	029967	X	
20	U40745	O-RING	1	-	029967	X	(SUB FOR R375R)
21	N130510	O-RING	1	-	029967	X	(SUB FOR 32240A)
22	T19972	SPRING	1	-	029967	X	(SUB FOR Z32435)
23	.....	PLUNGER	1	-	029967	X	(ORD AZ21284)
24	.....	O-RING	1	-	029967	X	(ORD AZ19697)
25	.....	PLUNGER	1	-	029967	X	(ORD AZ21284)
26	E46836	SPRING	1	-	029967	X	
27	.....	DIAPHRAGM	1	-	029967	X	(ORD AZ19697)
28	.....	GASKET	1	-	029967	X	(ORD AZ19697)
29	.....	GASKET	1	-	029967	X	(ORD AZ19697)
30	.....	GASKET	1	-	029967	X	(ORD AZ19697)
31	T12960	SNAP RING	4	-	029967	X	(SUB FOR Z33137)
32	AZ19692	HYDRAULIC PUMP	1	-	029967	X	(SUB FOR AH62124)
..	AZ21283	GEAR	1	-	029967	X	KIT, INCL KEYS 1,2
..	AZ21284	PLUNGER	1	-	029967	X	KIT, INCL KEYS 10,23,25
..	AZ19697	GASKET KIT	1	-	029967	X	KIT, INCL KEYS 16,19-21,24,27-30

COPYRIGHT©1994 - 2008 DEERE & COMPANY Moline, Illinois All rights reserved

(2D21) HYDROST.REEL DRIVE MOTOR
MOTEUR DE REGLAGE DE REGIME DU RABATTEUR HYDROST.
VERSTELLMOTOR FUER HYDROSTAT.HASPELANTRIEB
MOTORINO PER REGOLAZIONE DELL'ASPO A COMANDO IDROSTATICO
MOTOR PARA AJUSTE DEL MOLINETE POR MANDO HIDROSTATICO
MOTOR FOR HYDROSTATISK HASPELDRIVNING

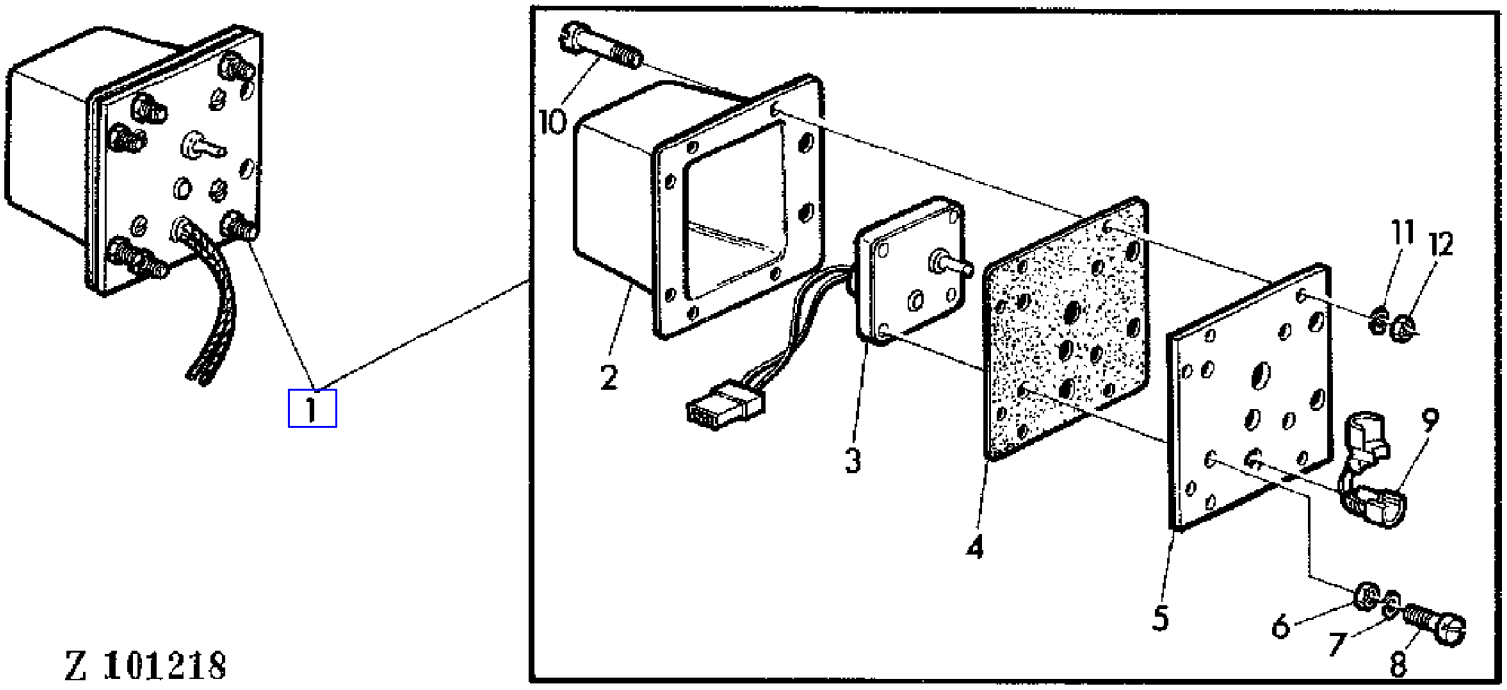

COPYRIGHT©1994 - 2008 DEERE & COMPANY Moline, Illinois All rights reserved

(2D21) HYDROST.REEL DRIVE MOTOR
MOTEUR DE REGLAGE DE REGIME DU RABATTEUR HYDROST.
VERSTELLMOTOR FUER HYDROSTAT.HASPELANTRIEB
MOTORINO PER REGOLAZIONE DELL'ASPO A COMANDO IDROSTATICO
MOTOR PARA AJUSTE DEL MOLINETE POR MANDO HIDROSTATICO
MOTOR FOR HYDROSTATISK HASPELDRIVNING

KEY	PART NO.	PART NAME	QTY	SERIAL NO.	955	REMARKS
1	AH94131	ACTUATOR	1		X	
2	H95195	COVER	1		X	
3	AH92897	MOTOR	1		X	
4	H95192	GASKET	1		X	
5	H95191	PLATE	1		X	
6	14H605	NUT	4		X	5/32"
7	12H315	LOCK WASHER	4		X	5/32"
8	21H1376	SCREW	4		X	5/32"X1-1/4"
9	H95560	GROMMET	1		X	
10	21H1353	SCREW	6		X	NO.6X3/4"
11	12H314	LOCK WASHER	6		X	NO.6
12	14H1026	NUT	6		X	NO.6

COPYRIGHT©1994 - 2008 DEERE & COMPANY Moline, Illinois All rights reserved

(3A19) INDICATORS
INDICATEURS
ANZEIGEGERAETE
INDICATORI
INDICADORES
INDIKATORER

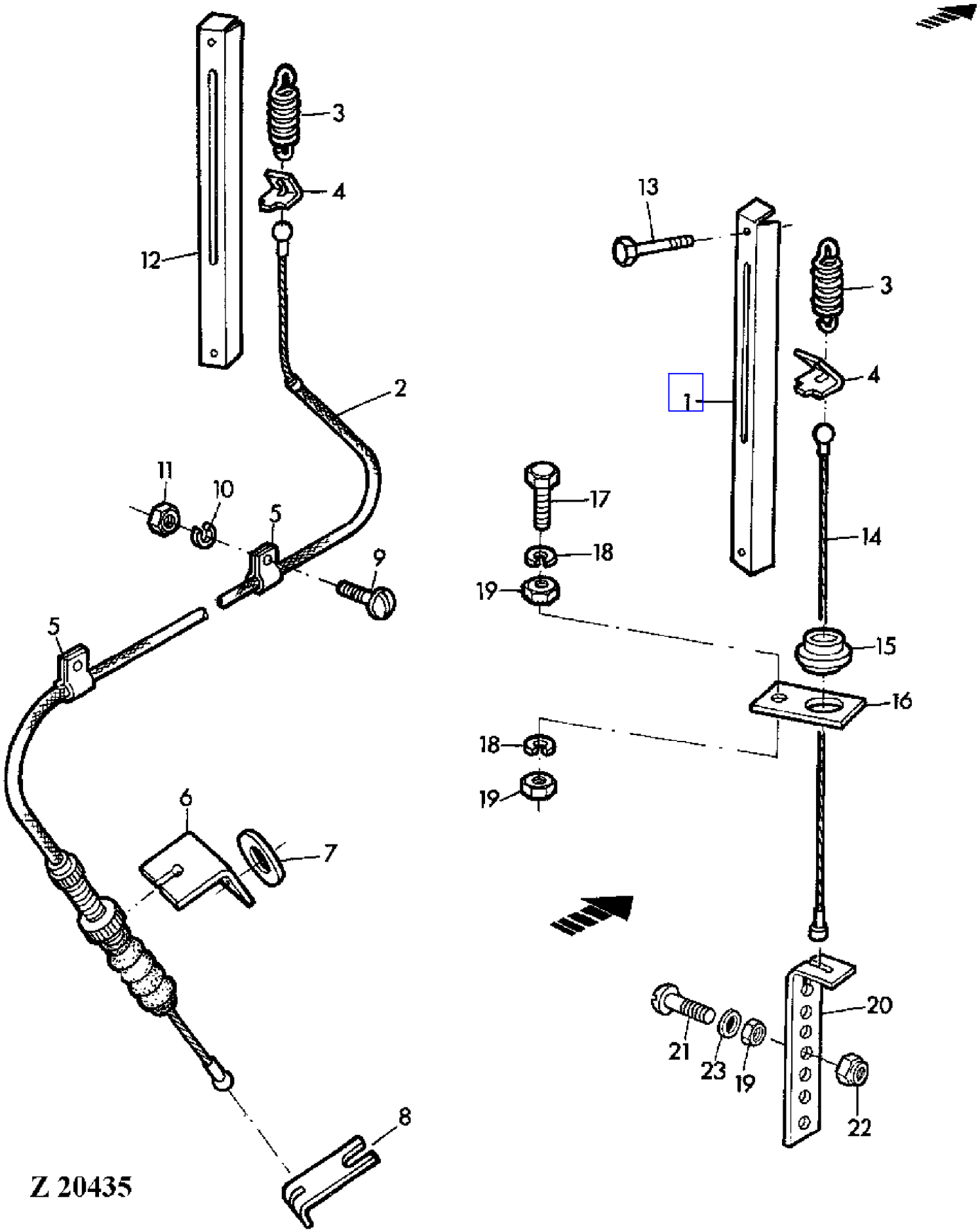

COPYRIGHT©1994 - 2008 DEERE & COMPANY Moline, Illinois All rights reserved

(PC4146) 955 Combine

(3A19) INDICATORS
INDICATEURS
ANZEIGEGERAETE
INDICATORI
INDICADORES
INDIKATORER

KEY	PART NO.	PART NAME	QTY	SERIAL NO.	955	REMARKS
1	Z30003	CASE	1		X	
2	AZ18578	PUSH PULL CABLE	1	- 016667	X	LH
3	L12259	SPRING	2		X	
4	Z30000	POINTER	2		X	
5	Z22069	CLAMP	5	- 016667	X	
6	Z30002	RETAINER	1	- 016667	X	
7	24M7113	WASHER	3	- 016667	X	
8	Z29999	RETAINER	1	- 016667	X	
9	21M7082	SCREW	2		X	M6X18
10	12M7012	LOCK WASHER	2		X	6MM
11	14M7027	NUT	2		X	M6
12	AZ18579	HOUSING	1	- 016667	X	
13	19M7379	CAP SCREW	4		X	M6X20
14	AZ20466	CABLE	1		X	RH
15	Z25419	EYELET	1		X	
16	Z31807	HOLDER	1		X	
17	19M7288	CAP SCREW	1		X	M8X30
18	12M7008	LOCK WASHER	2		X	8MM
19	14M7029	NUT	2		X	M8
20	Z30001	HOLDER	1		X	
21	21M7161	SCREW	1		X	M8X30
22	14M7166	LOCK NUT	1		X	M8
23	24M7036	WASHER	1		X	9MM

COPYRIGHT©1994 - 2008 DEERE & COMPANY Moline, Illinois All rights reserved

(2B10) INDIVIDUAL PARTS FOR STEERING
PIECES DETACHEES POUR DIRECTION
EINZELTEILE ZUR LENKUNG
PARTI SINGOLE DELLO STERZO
PIEZAS PARA LA DIRECCION
DELAR FOR STYRNING

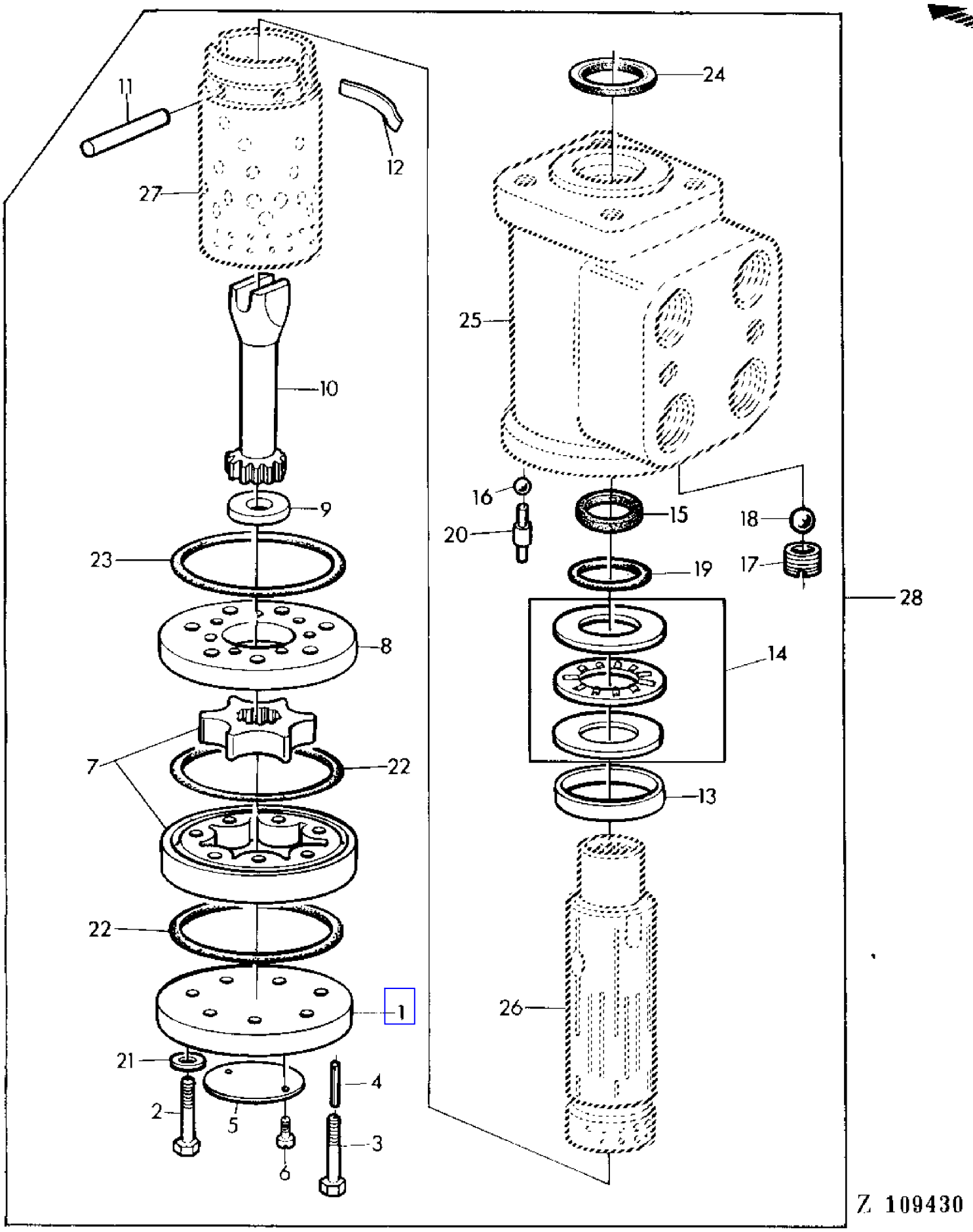

COPYRIGHT©1994 - 2008 DEERE & COMPANY Moline, Illinois All rights reserved

(2B10) INDIVIDUAL PARTS FOR STEERING
PIECES DETACHEES POUR DIRECTION
EINZELTEILE ZUR LENKUNG
PARTI SINGOLE DELLO STERZO
PIEZAS PARA LA DIRECCION
DELAR FOR STYRNING

KEY	PART NO.	PART NAME	QTY	SERIAL NO.		955	REMARKS
1	Z31359	COVER	1		- 029967	X	
2	Z31362	CAP SCREW	6		- 029967	X	
3	Z31361	CAP SCREW	1		- 029967	X	
4	Z31360	SPRING PIN	1		- 029967	X	
5	Z31363	SERIAL NUMBER PLATE	1		- 029967	X	
6	Z31364	SCREW	2		- 029967	X	
7	AZ20005	STEERING METERING PUMP	1		- 029967	X	
8	Z31358	DISTRIBUTOR PLATE	1		- 029967	X	
9	Z31357	WASHER	1		- 029967	X	
10	Z31356	DRIVE SHAFT	1		- 029967	X	
11	Z31354	PIN	1		- 029967	X	
12	AZ25154	LEAF SPRING	1		- 029967	X	KIT (SUB FOR Z31355)
13	Z31353	RING	1		- 029967	X	
14	AL36989	THRUST BEARING	1		- 029967	X	(SUB FOR AZ20006, Z31351, Z31352)
15	Z31455	BACK-UP RING	1		- 029967	X	(ORD AZ20003)
16	Z36098	BALL	2	005865	- 029967	X	(SUB FOR AZ20002)
17	Z31350	PIPE PLUG	1		- 029967	X	
18	Z31349	BALL	1		- 029967	X	
19	Z31452	O-RING	1		- 029967	X	(ORD AZ20003)
20	AZ25845	PIN	2	005865	- 029967	X	(SUB FOR Z36100, Z36148)
21	Z31456	WASHER	6		- 029967	X	(ORD AZ20003)
22	Z31454	O-RING	2		- 029967	X	(ORD AZ20003)
23	Z31453	O-RING	1		- 029967	X	(ORD AZ20003)
24	Z31348	SEAL	1		- 029967	X	(ORD AZ20003)
25	.....	HOUSING	1		- 029967	X	(ORD AZ25103)
26	.....	SPOOL VALVE	1		- 029967	X	(ORD AZ25103)
27	.....	VALVE SPOOL	1		- 029967	X	(ORD AZ25103)
28	AZ25103	STEERING METERING PUMP	1		- 029967	X	INCL KEYS 1-27, DANFOSS-150-1045 (SUB FOR AZ20002)
	AZ25773	STEERING CONTROL UNIT	1		- 029967	X	INCL KEYS 1-27, DANFOSS-150-1156
..	AZ20003	SEAL KIT	1		- 029967	X	KIT, INCL KEYS 15,19,21-24

COPYRIGHT©1994 - 2008 DEERE & COMPANY Moline, Illinois All rights reserved

(2B12) INDIVIDUAL PARTS FOR STEERING
PIECES DETACHEES POUR DIRECTION
EINZELTEILE ZUR LENKUNG
SINGOLE PARTI DELLO STERZO
PIEZAS PARA LA DIRECCION
BESTANDSDELAR FOR STYRNING

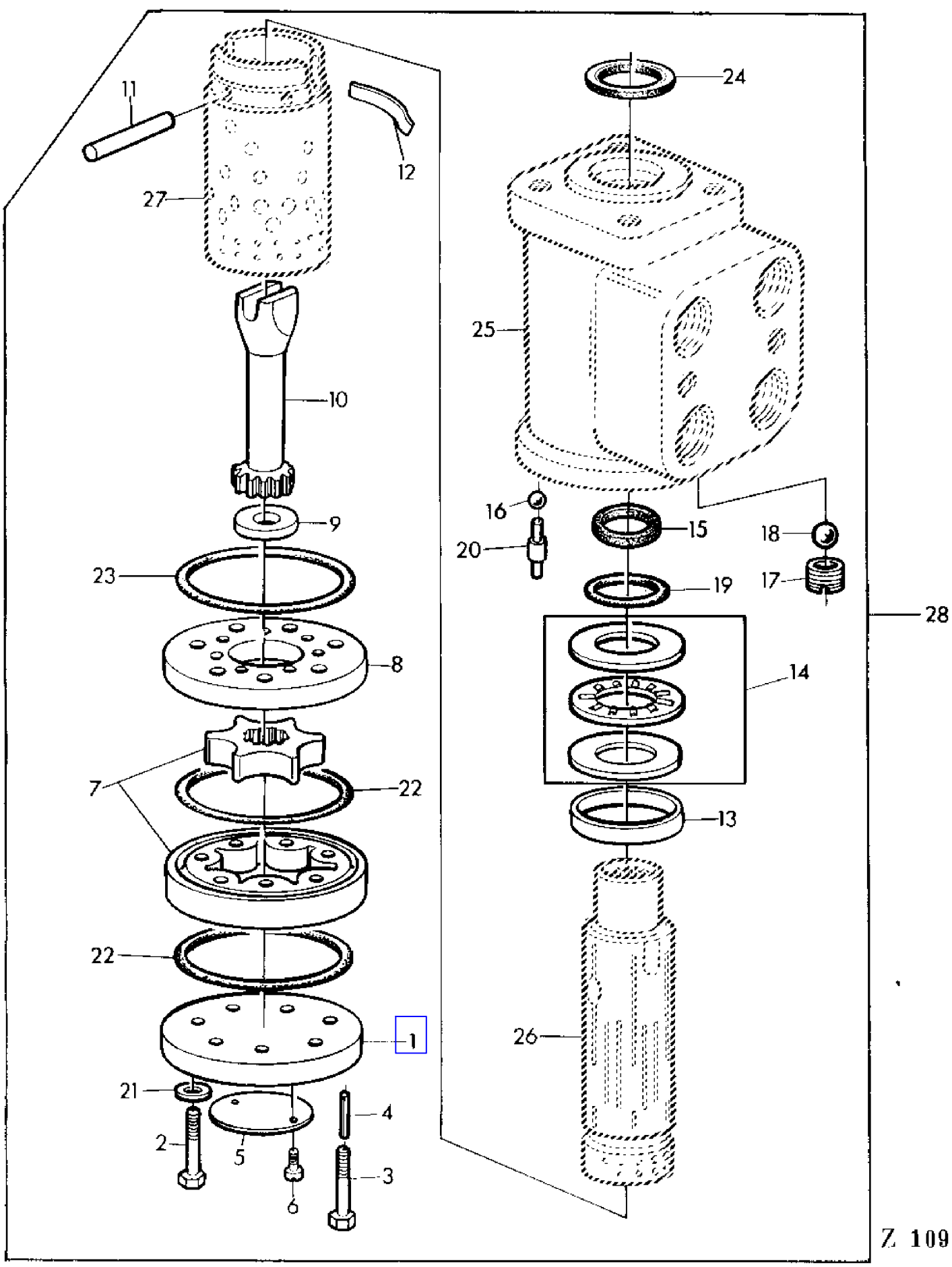

COPYRIGHT©1994 - 2008 DEERE & COMPANY Moline, Illinois All rights reserved

(2B12) INDIVIDUAL PARTS FOR STEERING
PIECES DETACHEES POUR DIRECTION
EINZELTEILE ZUR LENKUNG
SINGOLE PARTI DELLO STERZO
PIEZAS PARA LA DIRECCION
BESTANDSDELAR FOR STYRNING

KEY	PART NO.	PART NAME	QTY	SERIAL NO.		955	REMARKS
1	Z31359	COVER	1	029968	-	X	
2	19M7698	CAP SCREW	6	029968	-	X	M8X1X40
3	L32709	CAP SCREW	1	029968	-	X	
4	Z31360	SPRING PIN	1	029968	-	X	
5	Z31363	SERIAL NUMBER PLATE	1	029968	-	X	
6	Z31364	SCREW	2	029968	-	X	
7	AL28272	STEERING METERING PUMP	1	029968	-	X	
8	Z31358	DISTRIBUTOR PLATE	1	029968	-	X	
9	L32708	SHIM	1	029968	-	X	
10	Z31356	DRIVE SHAFT	1	029968	-	X	
11	Z31354	PIN	1	029968	-	X	
12	AZ25154	LEAF SPRING	1	029968	-	X	KIT
13	Z31353	RING	1	029968	-	X	
14	AL36989	THRUST BEARING	1	029968	-	X	(SUB FOR AZ20006, Z31351, Z31352)
15	Z31455	BACK-UP RING	1	029968	-	X	(ORD AZ20003)
16	Z36098	BALL	2	029968	-	X	
17	Z31350	PIPE PLUG	1	029968	-	X	
18	Z31349	BALL	1	029968	-	X	
19	Z31452	O-RING	1	029968	-	X	(ORD AZ20003)
20	AZ31300	PIN	2	029968	-	X	(SUB FOR Z36100, Z36148, Z36149)
21	Z31456	WASHER	7	029968	-	X	(ORD AZ20003)
22	Z31454	O-RING	2	029968	-	X	(ORD AZ20003)
23	Z31453	O-RING	1	029968	-	X	(ORD AZ20003)
24	Z31348	SEAL	1	029968	-	X	(ORD AZ20003)
25	.....	HOUSING	1	029968	-	X	(ORD AZ25773)
26	.....	SPOOL VALVE	1	029968	-	X	(ORD AZ25773)
27	.....	VALVE SPOOL	1	029968	-	X	(ORD AZ25773)
28	AZ25773	STEERING CONTROL UNIT	1	029968	-	X	INCL KEYS 1-27, DANFOSS-150-1156 (INCL AZ31301, AZ33901)
..	AZ20003	SEAL KIT	1	029968	-	X	KIT, INCL KEYS 15,19,21-24

COPYRIGHT©1994 - 2008 DEERE & COMPANY Moline, Illinois All rights reserved

(2B14) INDIVIDUAL PARTS FOR STEERING
PIECES DETACHEES POUR DIRECTION
EINZELTEILE ZUR LENKUNG
SINGOLE PARTI DELLO STERZO
PIEZAS PARA LA DIRECCION
BESTANDSDELAR FOR STYRNING

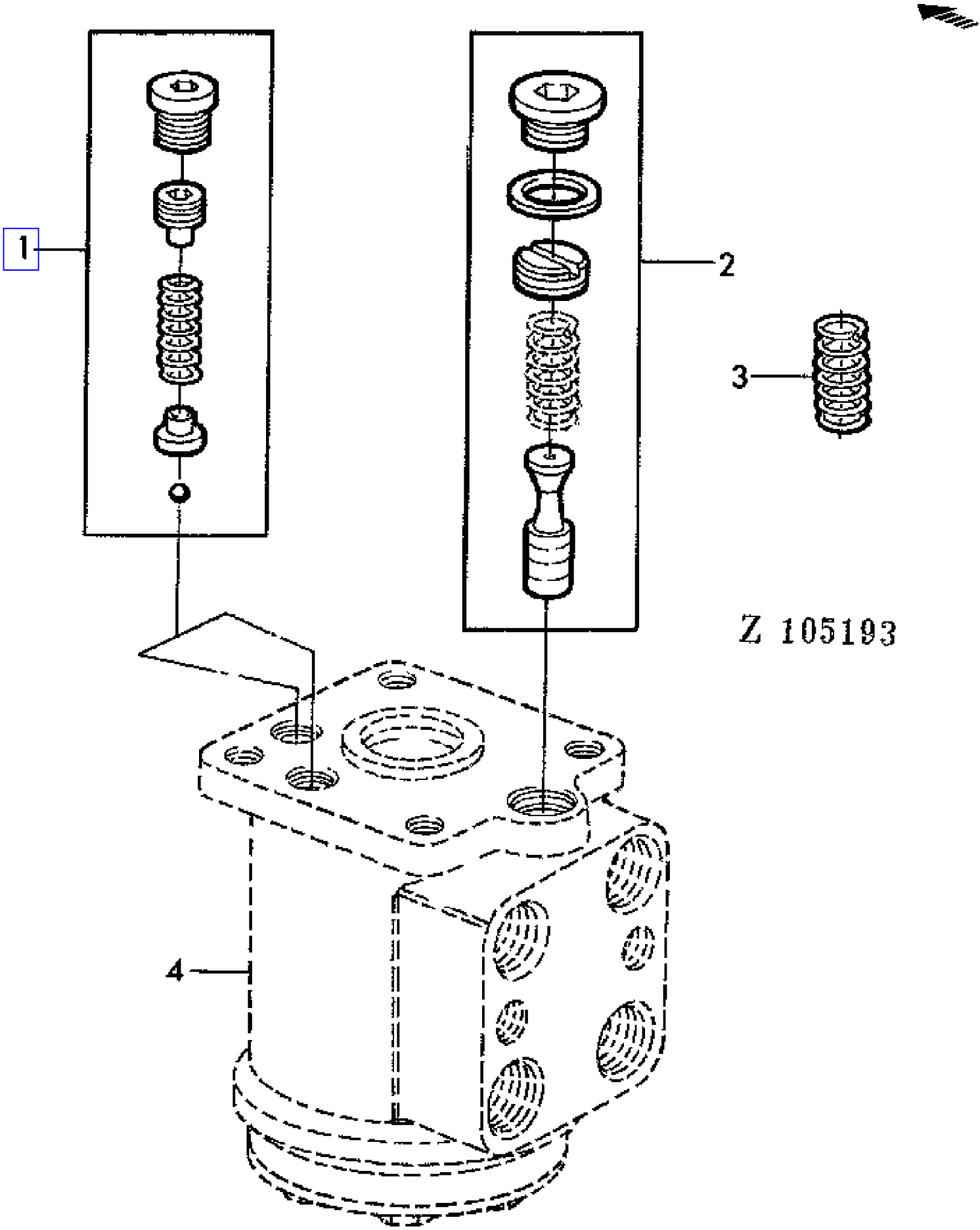

COPYRIGHT©1994 - 2008 DEERE & COMPANY Moline, Illinois All rights reserved

(2B14) INDIVIDUAL PARTS FOR STEERING
PIECES DETACHEES POUR DIRECTION
EINZELTEILE ZUR LENKUNG
SINGOLE PARTI DELLO STERZO
PIEZAS PARA LA DIRECCION
BESTANDSDELAR FOR STYRNING

KEY	PART NO.	PART NAME	QTY	SERIAL NO.		955	REMARKS
1	AZ31301	VALVE	2	029968	-	X	
2	AZ33901	GASKET KIT	1	029968	-	X	(SUB FOR AZ31302)
3	Z43819	COMPRESSION SPRING	1	029968	-	X	
4	.....	HOUSING	1	029968	-	X	(ORD AZ25773)

COPYRIGHT©1994 - 2008 DEERE & COMPANY Moline, Illinois All rights reserved

(3E06) INNER FILTER-AIR CONDITIONED CAB
FILTRE INTERIEUR-CABINE CLIMATISEE
INNERER FILTER-KABINE MIT KLIMAANLAGE
FILTRO INTERNO-CABINA CONDIZIONATA
FILTRO INTERNO-CABINA CON AIRE ACONDICIONADO
INRE FILTER-HYTT MED LUFTKONDITIONERING

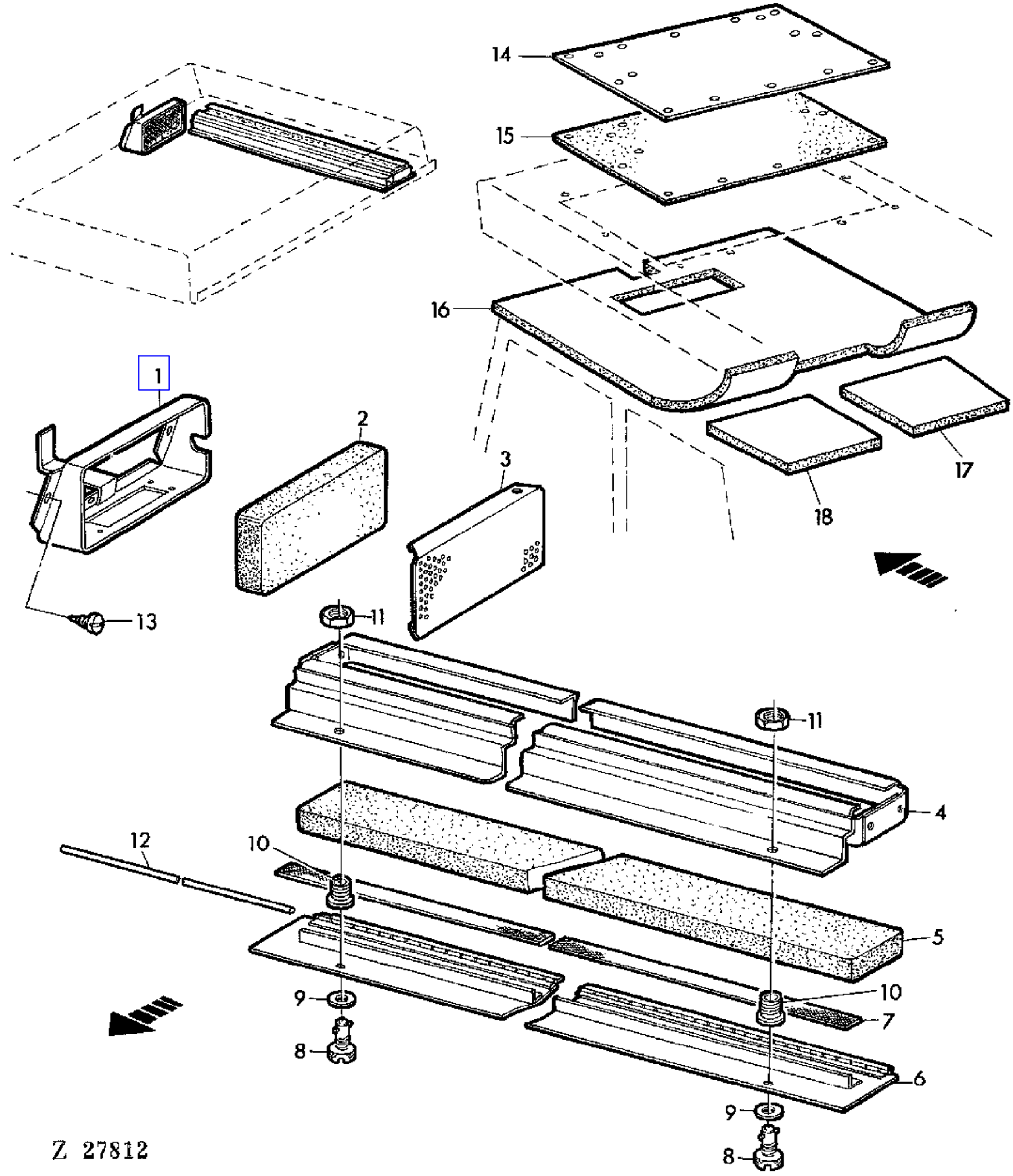

COPYRIGHT©1994 - 2008 DEERE & COMPANY Moline, Illinois All rights reserved

(3E06) INNER FILTER-AIR CONDITIONED CAB
FILTRE INTERIEUR-CABINE CLIMATISEE
INNERER FILTER-KABINE MIT KLIMAANLAGE
FILTRO INTERNO-CABINA CONDIZIONATA
FILTRO INTERNO-CABINA CON AIRE ACONDICIONADO
INRE FILTER-HYTT MED LUFTKONDITIONERING

KEY	PART NO.	PART NAME	QTY	SERIAL NO.	955	REMARKS
1	AH83236	CASE	1		X	
2	H83127	AIR FILTER	1		X	
3	H83125	SCREEN	1		X	
4	AH84395	CASE	1		X	
5	H84113	AIR FILTER	1		X	
6	AH82228	DOOR	1		X	INCL KEY 12
7	H81847	WEATHERSTRIP	1		X	1/8"X1/4"X20,3X6X6096MM
8	AH80347	LATCH	2		X	
9	H83283	WASHER	2		X	
10	H81812	SOCKET OUTLET	2		X	
11	H81813	NUT	2		X	
12	H81802	PIN	1		X	
13	37H1	SCREW	4		X	3/8"
14	H88578	SHEET	1		X	
15	H88779	SEAL	1		X	
16	AH96288	INSULATOR	1		X	
17	AH86826	INSULATOR	1		X	RH
18	AH86827	INSULATOR	1		X	LH

COPYRIGHT©1994 - 2008 DEERE & COMPANY Moline, Illinois All rights reserved

(3F12) INTERMEDIATE FLOOR PANEL FOR LONG FEEDER CONVEYOR
FOND INTERMEDIAIRE POUR CONVOYEUR LONG
ZWISCHENBODEN FUER LANGEN SCHRAEGFOERDERER
FONDO INTERMEDIO DEL CONVOGLIATORE LUNGO
CHAPA INTERMEDIA PARA ELEVADOR DE MIES LARGO
MELLANPLAT FOR LANG INMATNINGSKANAL

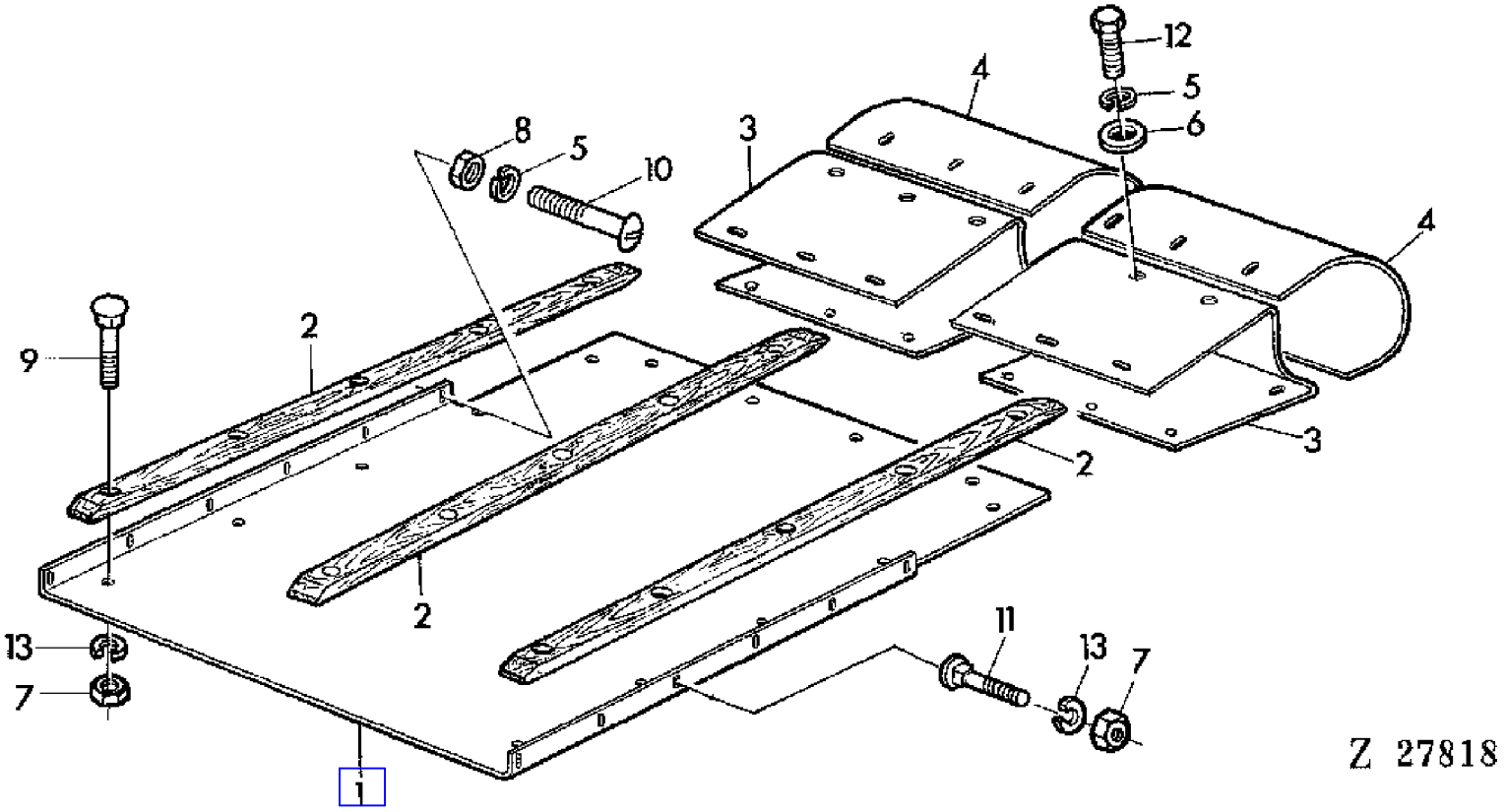

COPYRIGHT©1994 - 2008 DEERE & COMPANY Moline, Illinois All rights reserved

(3F12) INTERMEDIATE FLOOR PANEL FOR LONG FEEDER CONVEYOR
FOND INTERMEDIAIRE POUR CONVOYEUR LONG
ZWISCHENBODEN FUER LANGEN SCHRAEGFOERDERER
FONDO INTERMEDIO DEL CONVOGLIATORE LUNGO
CHAPA INTERMEDIA PARA ELEVADOR DE MIES LARGO
MELLANPLAT FOR LANG INMATNINGSKANAL

KEY	PART NO.	PART NAME	QTY	SERIAL NO.			955	REMARKS
1	AZ32841	SHEET	1				X	(SUB FOR AZ19468)
2	Z39550	GUIDE	3				X	(SUB FOR Z25661)
	Z42904	GUIDE	3				X	(A)
3	AZ19475	SHIELD	2		-	010731	X	
	AZ24767	GUARD	2	010732	-	025572	X	
	AZ19475	SHIELD	2	025573	-	XXXX	X	
4	Z30873	DEFLECTOR	2		-	010731	X	
	Z35771	GUARD	2	010732	-	025572	X	
	Z30873	DEFLECTOR	2	025573	-	XXXX	X	
5	12M7008	LOCK WASHER	AR				X	8MM
6	24M7036	WASHER	AR				X	9MM
7	14M7027	NUT	AR				X	M6
8	14M7029	NUT	AR				X	M8
9	03M7068	BOLT	AR				X	M6X20
10	21M7161	SCREW	AR				X	M8X30
11	21M7031	SCREW	AR				X	M6X15
12	19M7162	CAP SCREW	AR				X	M8X15
13	12M7012	LOCK WASHER	AR				X	6MM

(A) FOR RICE ATTACHMENT
POUR EQUIPEMENT RIZ
FUER REISAUSRUESTUNG
PER ATTREZZATURA DA RISO
PARA EQUIPO DE ARROZ
FOR RISTILLBEHOR

COPYRIGHT©1994 - 2008 DEERE & COMPANY Moline, Illinois All rights reserved

(3F11) INTERMEDIATE FLOOR PANEL FOR SHORT FEEDER CONVEYOR
FOND INTERMEDIAIRE POUR CONVOYEUR COURT
ZWISCHENBODEN FUER KURZEN SCHRAEGFOERDERER
FONDO INTERMEDIO DEL CONVOGLIATORE CORTO
CHAPA INTERMEDIA PARA ELEVADOR DE MIES CORTO
MELLANPLAT FOR KORT INMATNINGSKANAL

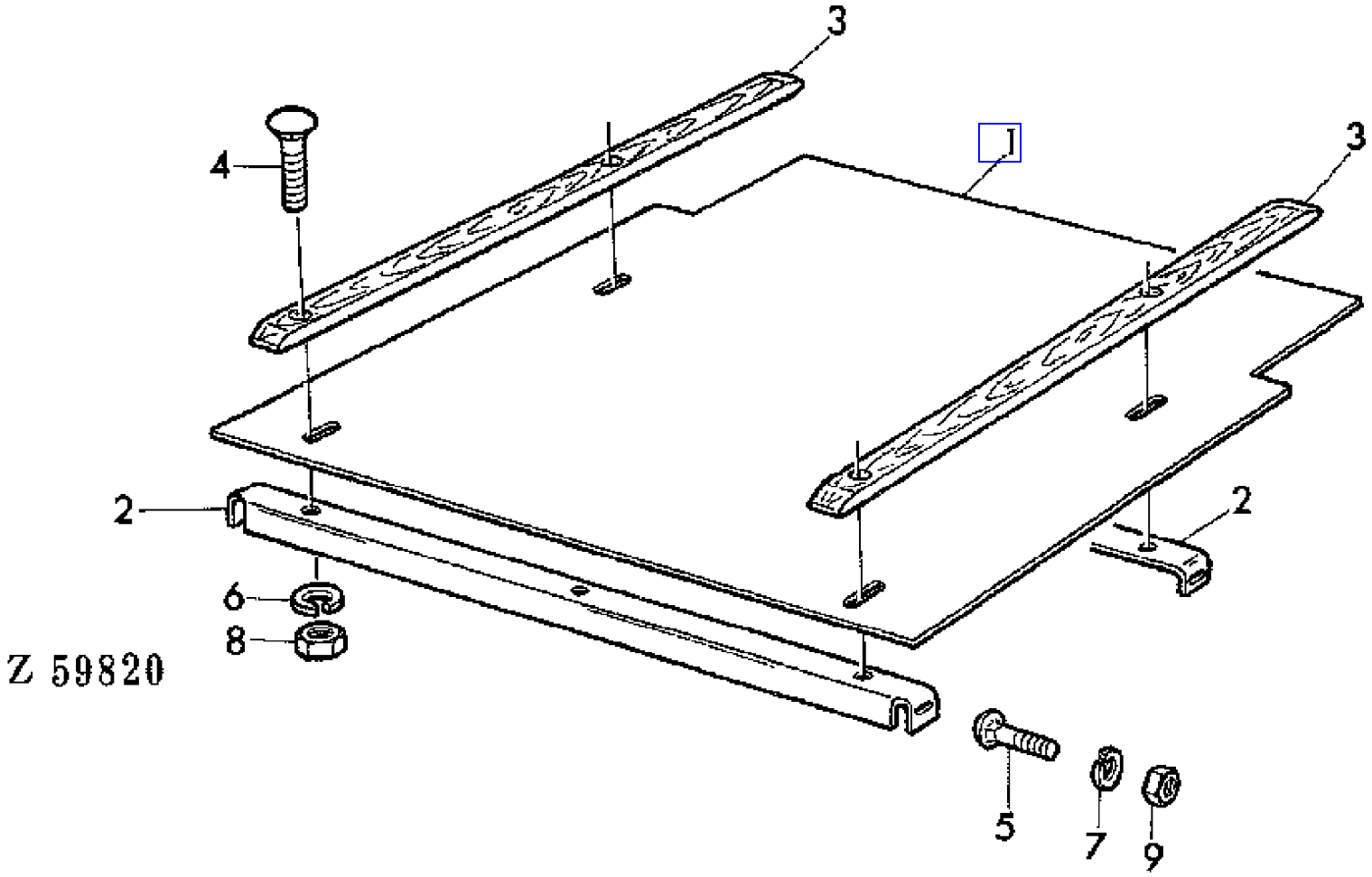

COPYRIGHT©1994 - 2008 DEERE & COMPANY Moline, Illinois All rights reserved

(3F11) INTERMEDIATE FLOOR PANEL FOR SHORT FEEDER CONVEYOR
FOND INTERMEDIAIRE POUR CONVOYEUR COURT
ZWISCHENBODEN FUER KURZEN SCHRAEGFOERDERER
FONDO INTERMEDIO DEL CONVOGLIATORE CORTO
CHAPA INTERMEDIA PARA ELEVADOR DE MIES CORTO
MELLANPLAT FOR KORT INMATNINGSKANAL

KEY	PART NO.	PART NAME	QTY	SERIAL NO.	955	REMARKS
1	Z33016	SHEET	1		X	
2	Z30246	REINFORCEMENT	2		X	
3	Z30245	SLAT	3		X	
4	03M7098	BOLT	6		X	M10X35
5	03M7054	BOLT	6		X	M8X20
6	12M7013	LOCK WASHER	6		X	10MM
7	12M7008	LOCK WASHER	4		X	8MM
8	14M7140	NUT	6		X	M10
9	14M7029	NUT	4		X	M8

COPYRIGHT©1994 - 2008 DEERE & COMPANY Moline, Illinois All rights reserved

(1F22) LIGHTING-CUTTING PLATFORM
ECLAIRAGE DE LA PLATE-FORME DE COUPE
BELEUCHTUNG SCHNEIDWERK
LUCI PIATTAFORMA CORTE
LUCES PARA PLATAFORMA DE CORTE
SKARBORDETS BELYSNING

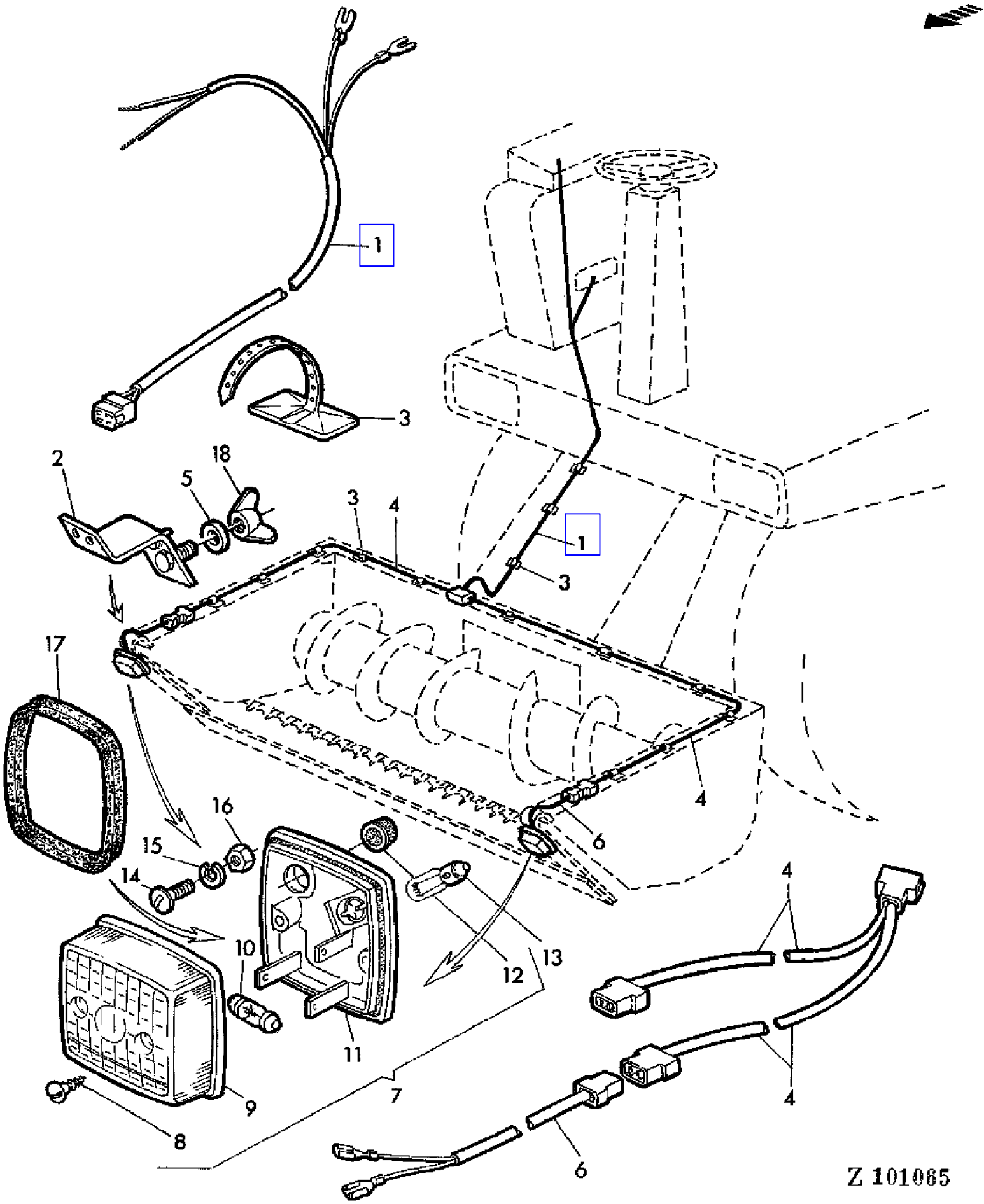

COPYRIGHT©1994 - 2008 DEERE & COMPANY Moline, Illinois All rights reserved

(1F22) LIGHTING-CUTTING PLATFORM
ECLAIRAGE DE LA PLATE-FORME DE COUPE
BELEUCHTUNG SCHNEIDWERK
LUCI PIATTAFORMA CORTE
LUCES PARA PLATAFORMA DE CORTE
SKARBORDETS BELYSNING

KEY	PART NO.	PART NAME	QTY	SERIAL NO.	955	REMARKS
1	AZ23919	WIRING HARNESS	1		X	ASSY
2	AZ30957	HOLDER	2		X	
3	Z36647	CLAMP	12		X	
4	AZ23920	WIRING HARNESS	1		X	ASSY
5	24M7036	WASHER	2		X	9MM
6	AZ23918	WIRING HARNESS	2		X	
7	AL25644	TURN SIGNAL LAMP	2		X	ASSY
8	37M7034	SCREW	4		X	4,2X32MM
9	AL27013	LENS	2		X	INCL KEY 8
10	57M6274	BULB	2		X	12VX5W
11	.....	SOCKET	2		X	NSEP (ORD KEY 7)
12	Z34569	GROMMET	2		X	
13	57M7014	BULB	2		X	12VX21W
14	21M7197	SCREW	4		X	M4X20
15	12M7031	LOCK WASHER	4		X	4MM
16	14M7139	NUT	4		X	M4
17	Z40994	GASKET	2		X	
18	Z20285	WING NUT	2		X	

COPYRIGHT©1994 - 2008 DEERE & COMPANY Moline, Illinois All rights reserved

(4C15) LOWER CHAFFER BOARD
CAISSON SASSEUR
SCHUETTELKASTEN
CASSONE DI PULIZIA
CAJA DE CRIBAS
SALLADA

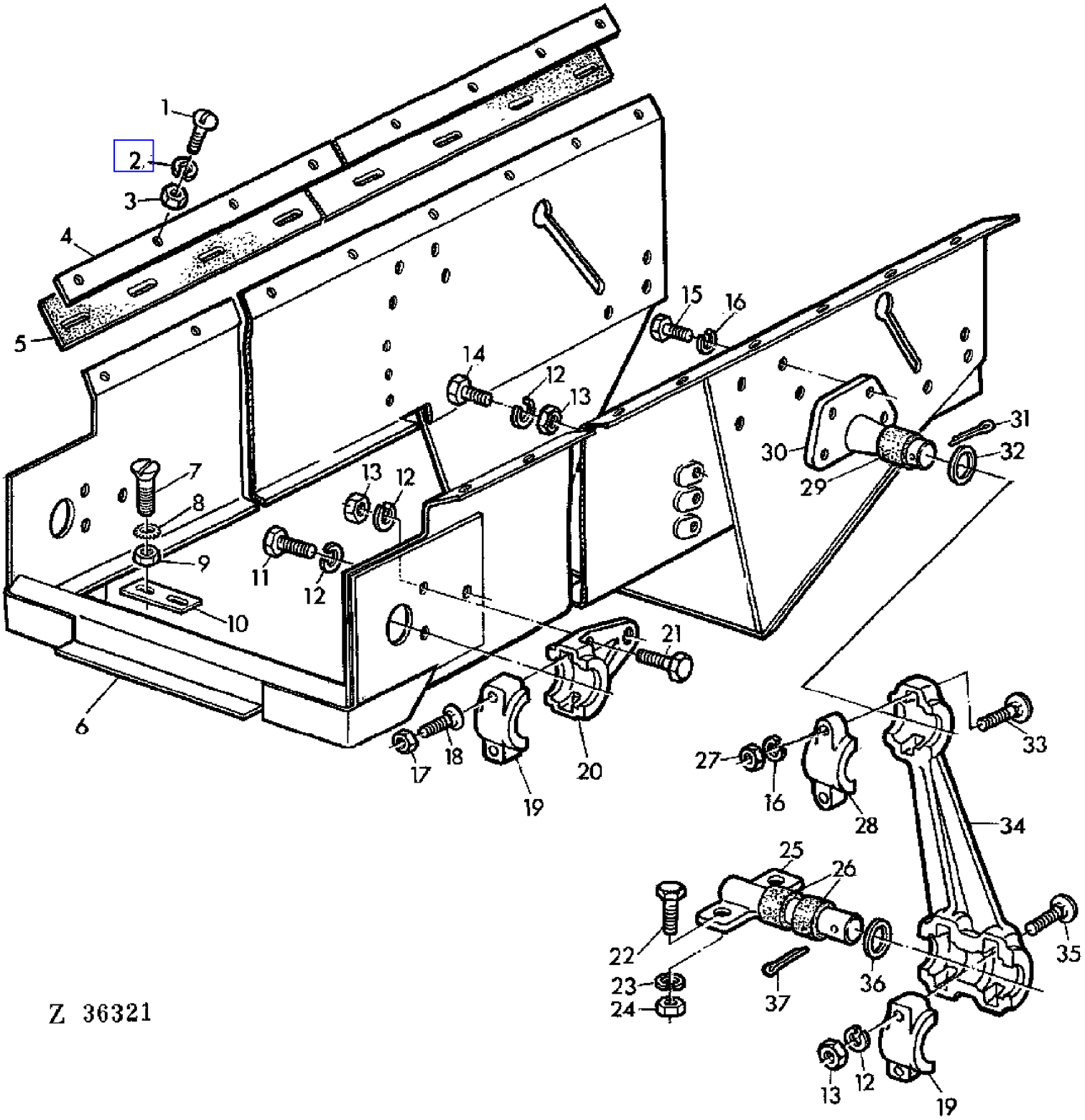

COPYRIGHT©1994 - 2008 DEERE & COMPANY Moline, Illinois All rights reserved

(4C15) LOWER CHAFFER BOARD
CAISSON SASSEUR
SCHUETTELKASTEN
CASSONE DI PULIZIA
CAJA DE CRIBAS
SALLADA

KEY	PART NO.	PART NAME	QTY	SERIAL NO.	955	REMARKS
1	21M7031	SCREW	28		X	M6X15
2	12M7012	LOCK WASHER	28		X	6MM
3	14M7027	NUT	28		X	M6
4	Z20260	REINFORCEMENT	2		X	
5	Z20262	GASKET	2		X	
6	AZ29241	COMBINE SHOE	1		X	(SUB FOR AZ13650)
7	21M5525	SCREW	4		X	M5X16
8	12M7062	LOCK WASHER	AR		X	6MM
9	14M7028	NUT	AR		X	M5
10	Z39723	GUIDE	2		X	
11	19M7379	CAP SCREW	2		X	M10X15
12	12M7013	LOCK WASHER	12		X	10MM
13	14M7140	NUT	10		X	M10
14	19M7166	CAP SCREW	2		X	M10X20
15	19M7297	CAP SCREW	2		X	M8X12
16	12M7008	LOCK WASHER	6		X	8MM
17	14M7167	LOCK NUT	4		X	M10
18	03M7073	BOLT	4		X	M10X60
19	PK1931H	HOUSING	4		X	LOW
20	Z10008	HANGER	2		X	
21	19M7167	CAP SCREW	4		X	M10X25
22	19M7285	CAP SCREW	4		X	M12X30
23	12M7014	LOCK WASHER	4		X	12MM
24	14M7031	NUT	4		X	M12
25	AZ19243	SHAFT	2		X	ASSY, INCL KEY 33
26	P49545	BUSHING	4		X	
27	14M7029	NUT	10		X	M8
28	PK1043H	HOUSING	2		X	UP
29	P42100	BUSHING	2		X	
30	AZ19242	SHAFT	2		X	ASSY, INCL KEY 29
31	11M7020	COTTER PIN	2		X	4X25MM
32	24M7049	WASHER	2		X	18MM
33	03M7072	BOLT	6		X	M8X40
34	Z21640	HANGER	2		X	
35	03M7079	BOLT	4		X	M10X55
36	24M7091	WASHER	2		X	26MM
37	11M7027	COTTER PIN	2		X	5X30MM

COPYRIGHT©1994 - 2008 DEERE & COMPANY Moline, Illinois All rights reserved

(4C13) LOWER CHAFFER BOARD-EXTENSION
CAISSON SASSEUR-RALLONGE
SCHUETTELKASTEN-VERLAENGERUNG
CASSONCINO-ESTENSIONE
CAJA DE CRIBAS-EXTENSION
SALLKASS-FORLANGNING

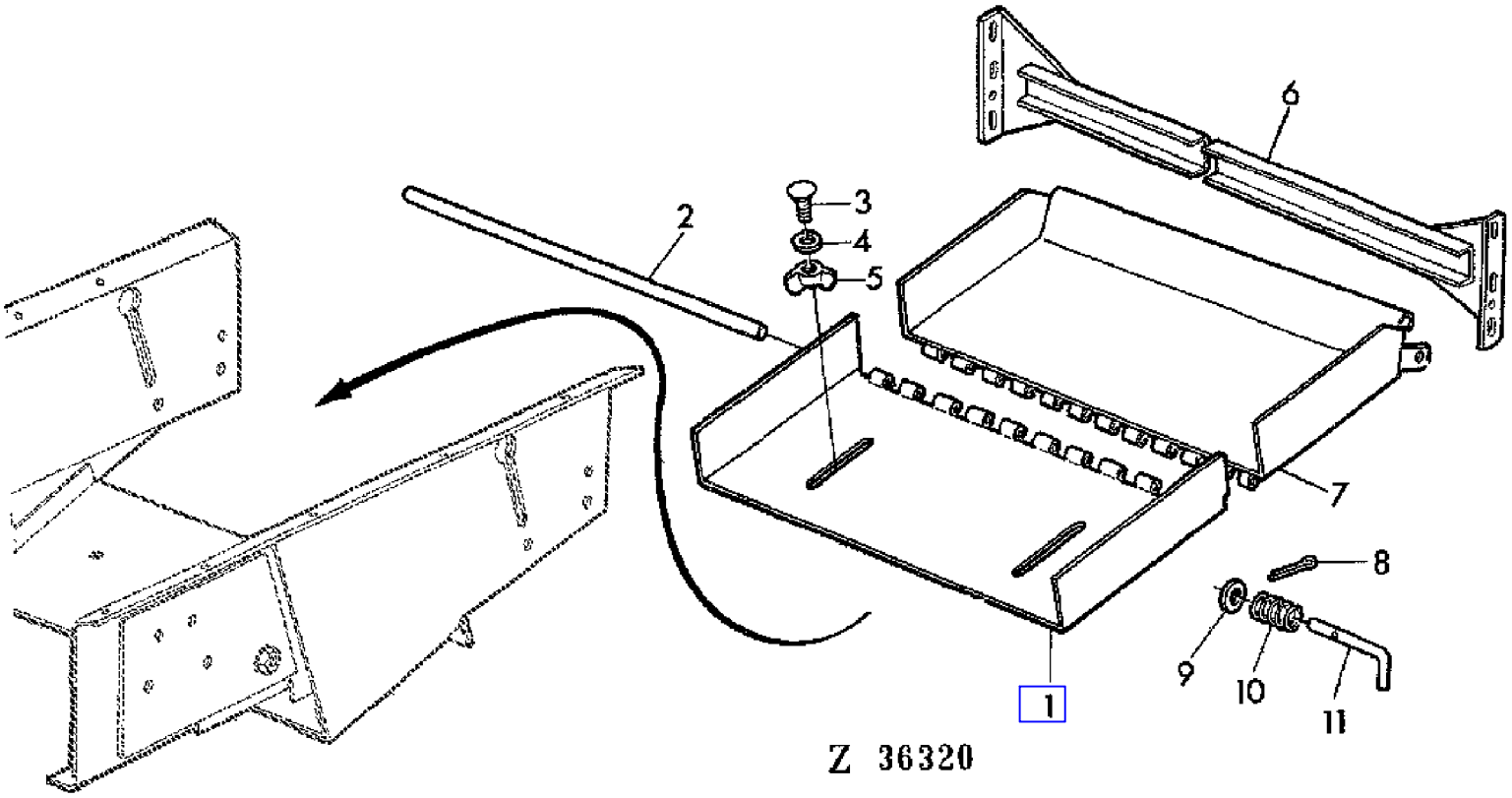

COPYRIGHT©1994 - 2008 DEERE & COMPANY Moline, Illinois All rights reserved

(4C13) LOWER CHAFFER BOARD-EXTENSION
CAISSON SASSEUR-RALLONGE
SCHUETTELKASTEN-VERLAENGERUNG
CASSONCINO-ESTENSIONE
CAJA DE CRIBAS-EXTENSION
SALLKASS-FORLANGNING

KEY	PART NO.	PART NAME	QTY	SERIAL NO.	955	REMARKS
1	AZ13649	EXTENSION	1		X	
2	Z20277	PIN	1		X	
3	03M7093	BOLT	2		X	M8X25
4	24M7036	WASHER	2		X	9MM
5	Z20285	WING NUT	2		X	8MM
6	AZ23227	CROSSBAR	1		X	
7	AZ20968	DOOR	1		X	
8	11M7013	COTTER PIN	2		X	3X20MM
9	24M7096	WASHER	2		X	10,5MM
10	Z20127	COMPRESSION SPRING	2		X	
11	Z36530	PIN	2		X	

COPYRIGHT©1994 - 2008 DEERE & COMPANY Moline, Illinois All rights reserved

(4D11) LOWER FAN VARIATOR
VARIATEUR INFERIEUR VENTILATEUR
UNTERER GEBLAESE-VARIATOR
VARIATORE DEL VENTILATORE INFERIORE
VARIADOR INFERIOR DEL VENTILADOR
NEDRE FLAEKTVARIATOR

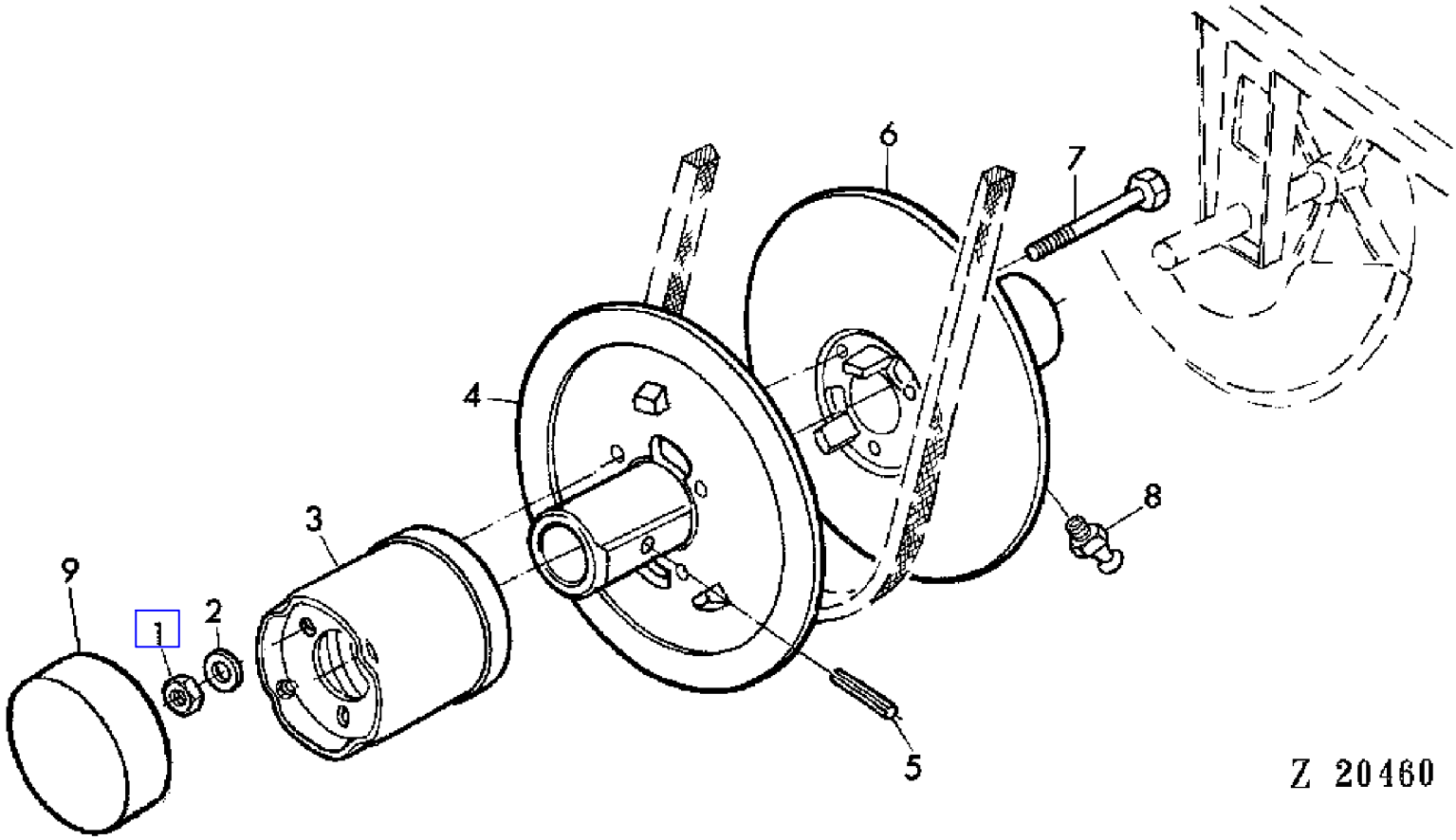

COPYRIGHT©1994 - 2008 DEERE & COMPANY Moline, Illinois All rights reserved

(4D11) LOWER FAN VARIATOR
VARIATEUR INFERIEUR VENTILATEUR
UNTERER GEBLAESE-VARIATOR
VARIATORE DEL VENTILATORE INFERIORE
VARIADOR INFERIOR DEL VENTILADOR
NEDRE FLAEKTVARIATOR

KEY	PART NO.	PART NAME	QTY	SERIAL NO.	955	REMARKS
1	14M7165	LOCK NUT	3		X	M6
2	24M7088	WASHER	3		X	6,6MM
3	AZ10248	SPRING ASSEMBLY	1		X	ASSY
4	Z10079	HALF SHEAVE	1		X	
5	34M7054	SPRING PIN	1		X	10X50MM
6	Z10081	HALF SHEAVE	1		X	
7	Z30687	CAP SCREW	3		X	6X155MM
8	58M5573	LUBRICATION FITTING	1		X	6MM
9	Z38279	CAP	1		X	

COPYRIGHT©1994 - 2008 DEERE & COMPANY Moline, Illinois All rights reserved

(3C02) MOUNTING PARTS
PIECES DE MONTAGE
ANBAUTEILE
PARTI DA MONTARE
PIEZAS DE MONTAJE
MONTERINGSDETALJER

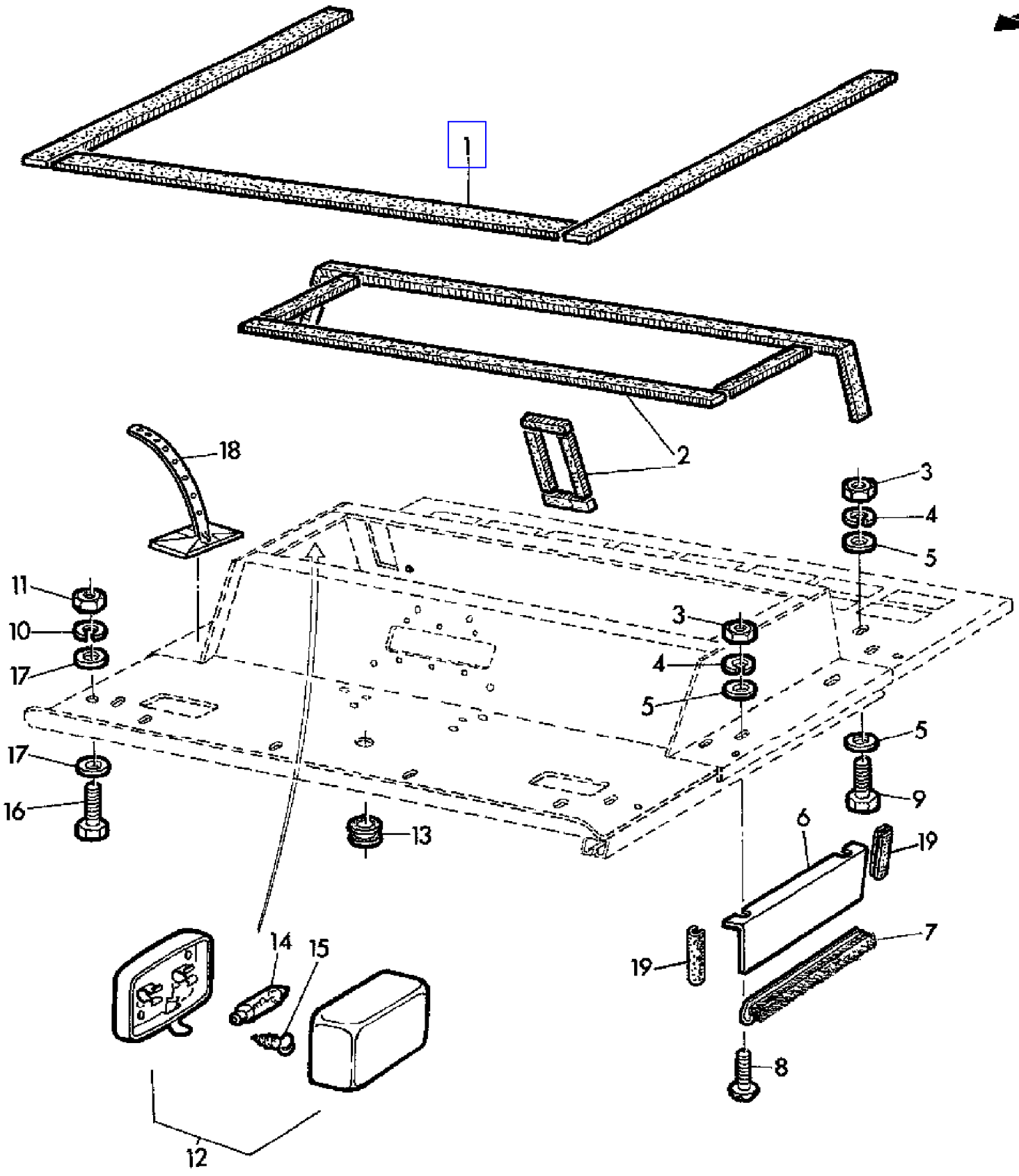

Z 28508

COPYRIGHT©1994 - 2008 DEERE & COMPANY Moline, Illinois All rights reserved

(PC4146) 955 Combine

(3C02) MOUNTING PARTS
PIECES DE MONTAGE
ANBAUTEILE
PARTI DA MONTARE
PIEZAS DE MONTAJE
MONTERINGSDETALJER

KEY	PART NO.	PART NAME	QTY	SERIAL NO.	955	REMARKS
1	CA19606	WEATHERSTRIP	1		X	LGTH = 5600 MM 30X6
2	CA19549	WEATHERSTRIP	1		X	LGTH = 6550 MM 12X6MM
3	14M7027	NUT	9		X	M6
4	12M7012	LOCK WASHER	9		X	6MM
5	24M7088	WASHER	16		X	6,6MM
6	CA19378	HOLDER	1		X	
7	CA19609	BRUSH	1		X	
8	21M7031	SCREW	2		X	M6X15
9	19M7077	CAP SCREW	7		X	M6X20
10	12M7013	LOCK WASHER	10		X	10MM
11	14M7140	NUT	10		X	M10
12	DA19591	LAMP	1		X	ASSY
13	Z21238	GROMMET	3		X	(SUB FOR CA19406)
14	57M6511	BULB	1		X	
15	37M7020	SCREW	2		X	4,2X13MM
16	19M7167	CAP SCREW	10		X	M10X25
17	24M7040	WASHER	20		X	11MM
18	Z36647	CLAMP	AR		X	
19	CA19903	GASKET	2		X	

COPYRIGHT©1994 - 2008 DEERE & COMPANY Moline, Illinois All rights reserved

(3C04) MOUNTING PARTS
PIECES DE MONTAGE
ANBAUTEILE
PARTI DA MONTARE
PIEZAS DE MONTAJE
MONTERINGSDETALJER

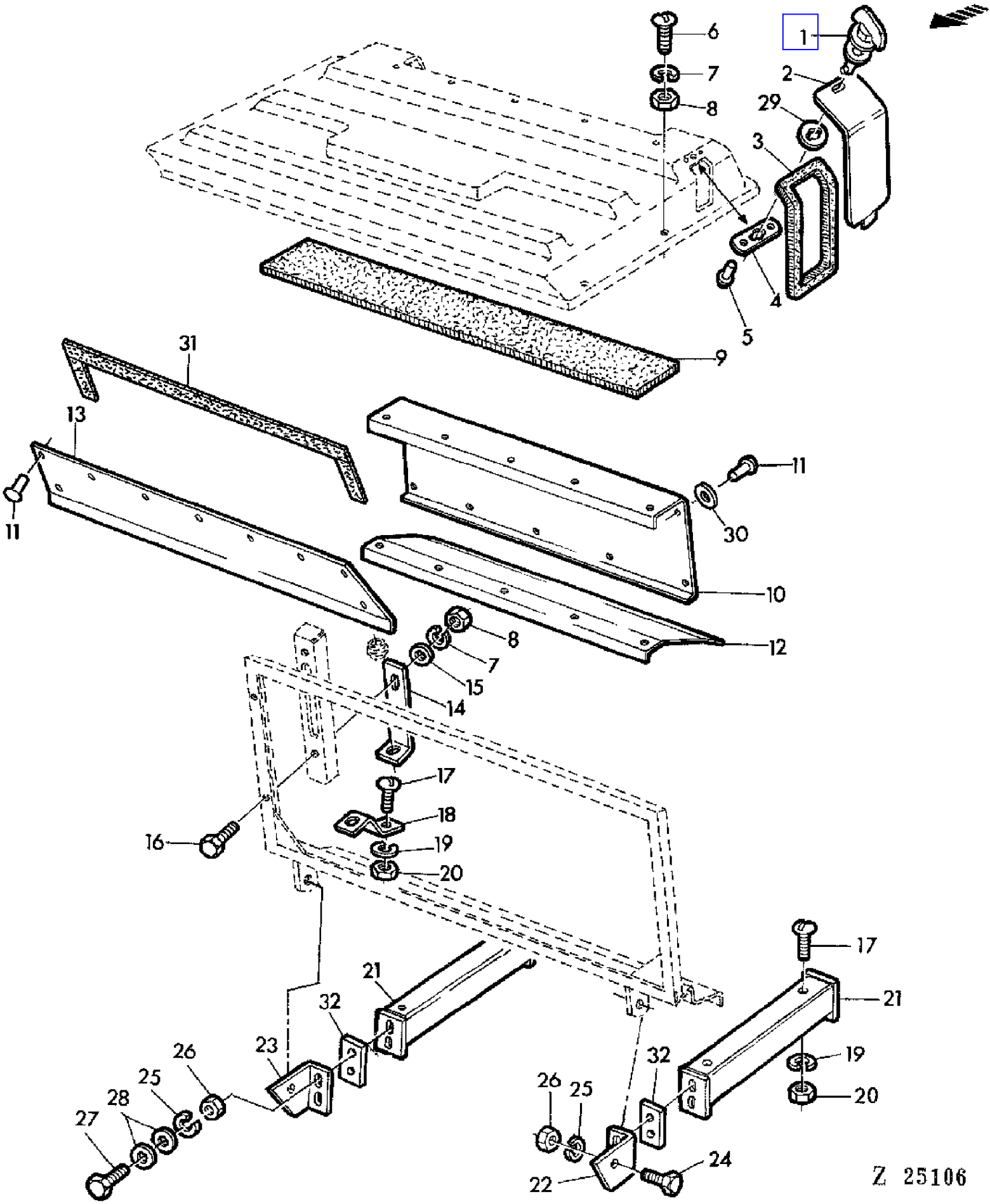

COPYRIGHT©1994 - 2008 DEERE & COMPANY Moline, Illinois All rights reserved

(PC4146) 955 Combine

(3C04) MOUNTING PARTS
PIECES DE MONTAGE
ANBAUTEILE
PARTI DA MONTARE
PIEZAS DE MONTAJE
MONTERINGSDETALJER

KEY	PART NO.	PART NAME	QTY	SERIAL NO.	955	REMARKS
1	AE31927	STUD	1		X	
2	DA19655	COVER	1		X	
3	CA19549	WEATHERSTRIP	1		X	LGTH = 6550 MM 12X6MM
4	E50847	LOCK	1		X	
5	16H104	RIVET	2		X	1/8"X7/16"
6	21M7085	SCREW	9		X	M6X20
7	12M7012	LOCK WASHER	13		X	6MM
8	14M7027	NUT	13		X	M6
9	CA19716	WEATHERSTRIP	1		X	
10	CA19400	SHEET	1		X	
11	CA19717	RIVET	19		X	
12	CA19639	SHEET	1		X	
13	CA19401	SHEET	1		X	
14	CA19467	SUPPORT	1		X	
15	24M7088	WASHER	4		X	6,6MM
16	19M6699	CAP SCREW	4		X	M6X70
17	21M7081	SCREW	5		X	M8X15
18	CA19468	HOLDER	1		X	
19	12M7008	LOCK WASHER	5		X	8MM
20	14M7029	NUT	5		X	M8
21	DA19459	SUPPORT	2		X	
22	CA19463	HOLDER	1		X	LH
23	CA19462	HOLDER	1		X	RH
24	19M7167	CAP SCREW	4		X	M10X25
25	12M7013	LOCK WASHER	8		X	10MM
26	14M7140	NUT	8		X	M10
27	19M7168	CAP SCREW	4		X	M10X30
28	24M7040	WASHER	8		X	11MM
29	E50846	LOCK WASHER	1		X	
30	CA21308	WASHER	7		X	
31	CA19420	WEATHERSTRIP	1		X	LGTH = 1850 MM 20X6MM
32	CA19961	STRAP	AR		X	

COPYRIGHT©1994 - 2008 DEERE & COMPANY Moline, Illinois All rights reserved

(3C06) MOUNTING PARTS
PIECES DE MONTAGE
ANBAUTEILE
PARTI DI MONTAGGIO
PIEZAS DE MONTAJE
MONTERINGSDETALJER

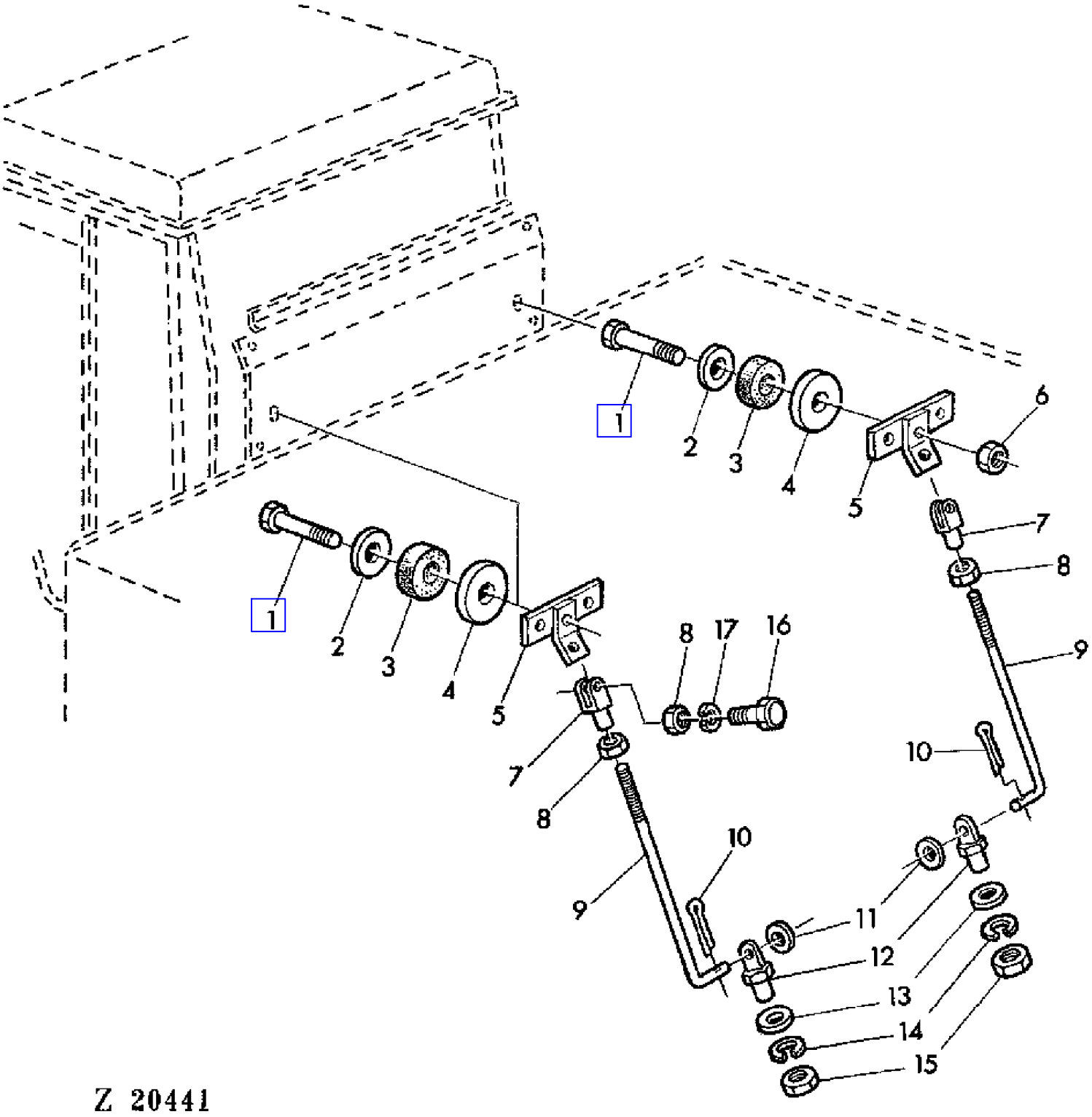

COPYRIGHT©1994 - 2008 DEERE & COMPANY Moline, Illinois All rights reserved

(PC4146) 955 Combine

(3C06) MOUNTING PARTS
PIECES DE MONTAGE
ANBAUTEILE
PARTI DI MONTAGGIO
PIEZAS DE MONTAJE
MONTERINGSDETALJER

KEY	PART NO.	PART NAME	QTY	CAB SERIAL NO.		955	REMARKS
1	19M7668	CAP SCREW	2	K13172	-	X	M10X100
2	Z38112	WASHER	2	K13172	-	X	
3	H80197	BUSHING	2	K13172	-	X	
4	H78856	RETAINER	2	K13172	-	X	
5	DA23407	HOLDER	2	K13172	-	X	
6	14M7167	LOCK NUT	2	K13172	-	X	M10
7	Z24493	YOKE	2	K13172	-	X	
8	14M7031	NUT	AR	K13172	-	X	M12
9	CA23410	HOOK BOLT	2	K13172	-	X	
10	11M7021	COTTER PIN	AR	K13172	-	X	4X25MM
11	24M7038	WASHER	AR	K13172	-	X	14MM
12	DA19456	EYEBOLT	2	K13172	-	X	
13	24M7040	WASHER	AR	K13172	-	X	11MM
14	12M7013	LOCK WASHER	AR	K13172	-	X	10MM
15	14M7140	NUT	AR	K13172	-	X	M10
16	19M7387	CAP SCREW	2	K13172	-	X	M12X40
17	12M7014	LOCK WASHER	AR	K13172	-	X	12MM

COPYRIGHT©1994 - 2008 DEERE & COMPANY Moline, Illinois All rights reserved

(2A20) MOUNTING PARTS FOR HYDRAULIC PUMP
POMPE HYDRAULIQUE-PIECES DE FIXATION
ANBAUTEILE FUER HYDRAULIKPUMPE
FISSAGGIO PER POMPA IDRAULICA
PIEZAS DE MONTAJE PARA BOMBA HIDRAULICA
MONTERINGSDETALJER FOR HYDRAULPUMP

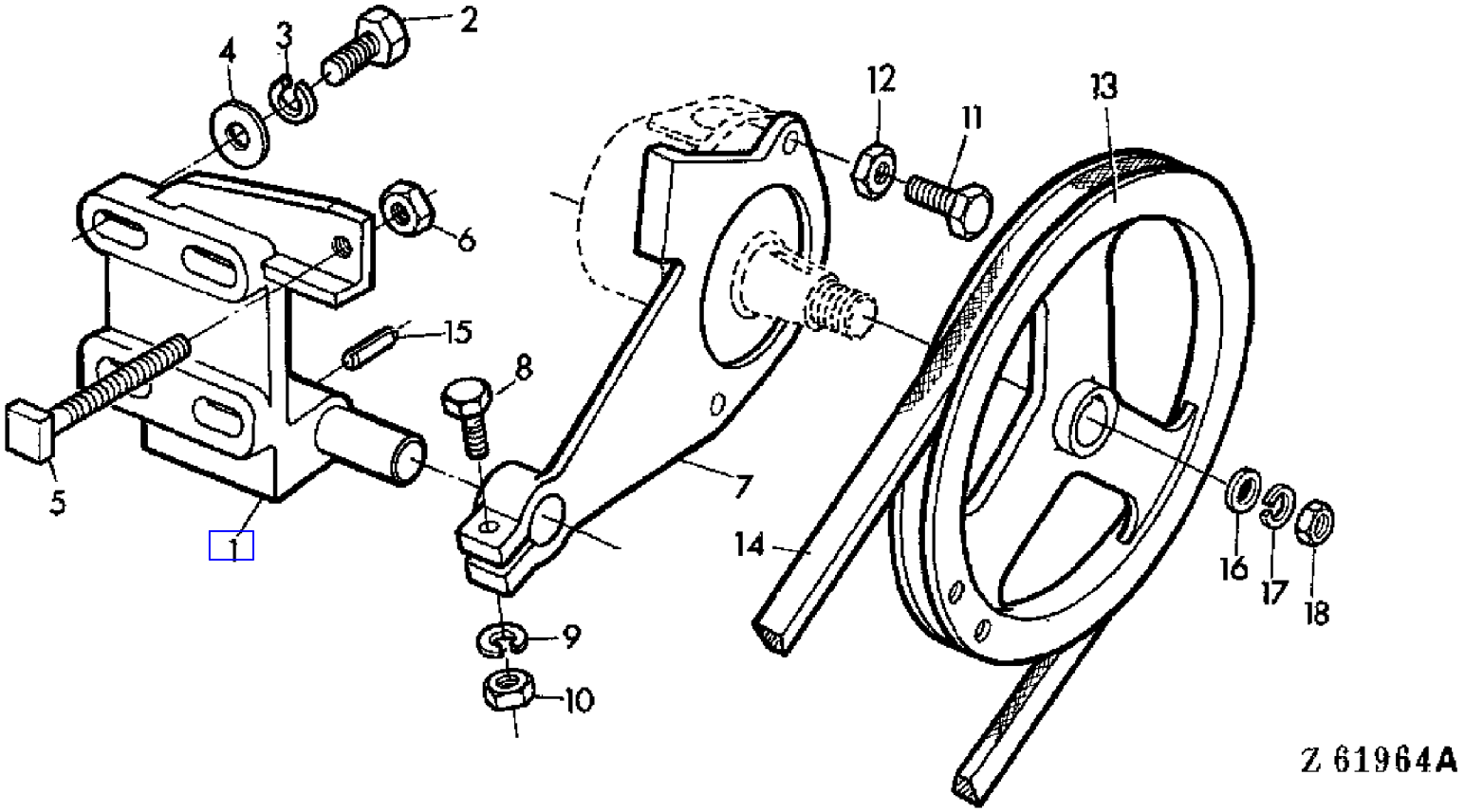

COPYRIGHT©1994 - 2008 DEERE & COMPANY Moline, Illinois All rights reserved

(2A20) MOUNTING PARTS FOR HYDRAULIC PUMP
POMPE HYDRAULIQUE-PIECES DE FIXATION
ANBAUTEILE FUER HYDRAULIKPUMPE
FISSAGGIO PER POMPA IDRAULICA
PIEZAS DE MONTAJE PARA BOMBA HIDRAULICA
MONTERINGSDETALJER FOR HYDRAULPUMP

KEY	PART NO.	PART NAME	QTY	SERIAL NO.	955	REMARKS
1	AZ18570	SUPPORT	1		X	
2	19H1805	CAP SCREW	4		X	1/2"X2"-1/2"
3	12H301	LOCK WASHER	AR		X	1/2"
4	24M7038	WASHER	2		X	14MM
5	22M7060	SET SCREW	1		X	12X55MM
6	14M7031	NUT	1		X	M12
7	Z10672	TIGHTENER	1		X	
8	19M7378	CAP SCREW	1		X	M8X45
9	12M7008	LOCK WASHER	1		X	8MM
10	14M7029	NUT	1		X	M8
11	19M7168	CAP SCREW	1		X	M10X30
12	14M7140	NUT	2		X	M10
13	Z10836	PULLEY	1		X	
14	Z34828	BELT	1		X	
15	34M7041	SPRING PIN	1		X	6X36MM
16	24M7113	WASHER	1		X	17MM
17	12M7013	LOCK WASHER	1		X	10MM
18	14H812	NUT	1		X	3/8"

COPYRIGHT©1994 - 2008 DEERE & COMPANY Moline, Illinois All rights reserved

(1D20) MUFFLER
SILENCIEUX
SCHALLDAEMPFER
MARMITTA
SILENCIADOR
LJUDDAMPARE

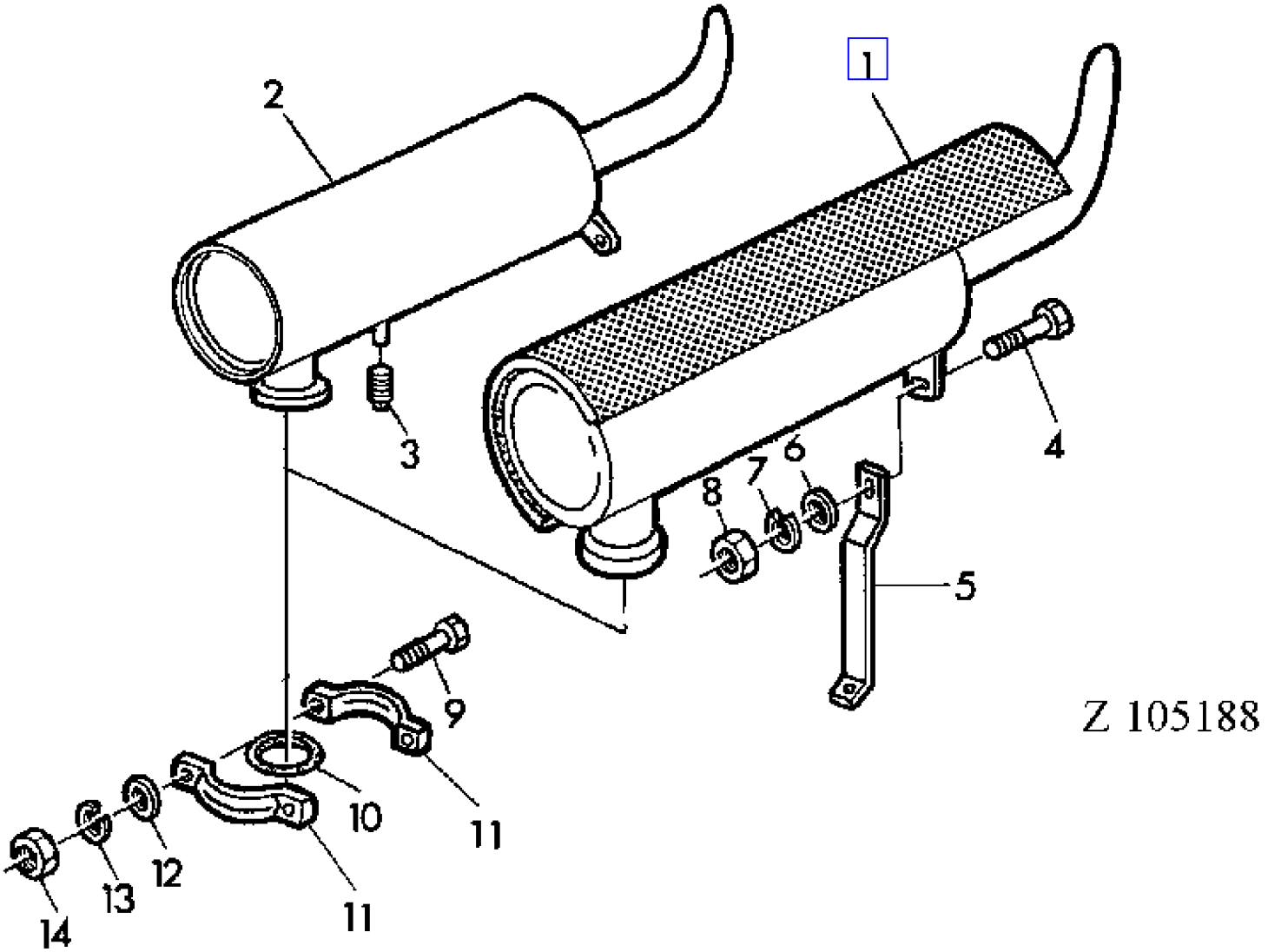

COPYRIGHT©1994 - 2008 DEERE & COMPANY Moline, Illinois All rights reserved

(1D20) MUFFLER
SILENCIEUX
SCHALLDAEMPFER
MARMITTA
SILENCIADOR
LJUDDAMPARE

KEY	PART NO.	PART NAME	QTY	ENGINE SERIAL NO.		955	REMARKS
1	AZ26622	MUFFLER	1	377810	-	X	
2	AZ30385	MUFFLER	1	377810	-	X	(A) (SUB FOR AZ27948)
3	15H237	PIPE PLUG	1	377810	-	X	1/2"
4	19M7163	CAP SCREW	1	377810	-	X	M8X25
5	Z37763	RETAINER	1	377810	-	X	
6	24M7036	WASHER	1	377810	-	X	9MM
7	12M7008	LOCK WASHER	1	377810	-	X	8MM
8	14M7029	NUT	1	377810	-	X	M8
9	19M7327	CAP SCREW	2	377810	-	X	M10X65
10	R31142	SEALING WASHER	1	377810	-	X	AR
11	AT29268	CLAMP	2	377810	-	X	AR
12	24M7040	WASHER	2	377810	-	X	11MM
13	12M7013	LOCK WASHER	2	377810	-	X	10MM
14	14M7140	NUT	2	377810	-	X	M10

(A) MUFFLER WITH SPARK ARRESTER
SILENCIEUX AVEC PARE-ETINCELLES
SCHALLDAEMPFER MIT FUNKENFAENGER
MARMITTA CON PARASCINTILLE
SILENCIADOR CON PARACHISPAS
LJUDDAMPARE MED GNISTSLACKARE

COPYRIGHT©1994 - 2008 DEERE & COMPANY Moline, Illinois All rights reserved

(1D18) MUFFLER AND EXHAUST MANIFOLD
COLLECTEUR D'ECHAPPEMENT ET SILENCIEUX
SCHALLDAEMPFER UND AUSPUFFKRUEMMER
COLLETTORE SCARICO E MARMITTA
SILENCIADOR Y COLECTOR DE ESCAPE
AVGASROR OCH LJUDAMPARE

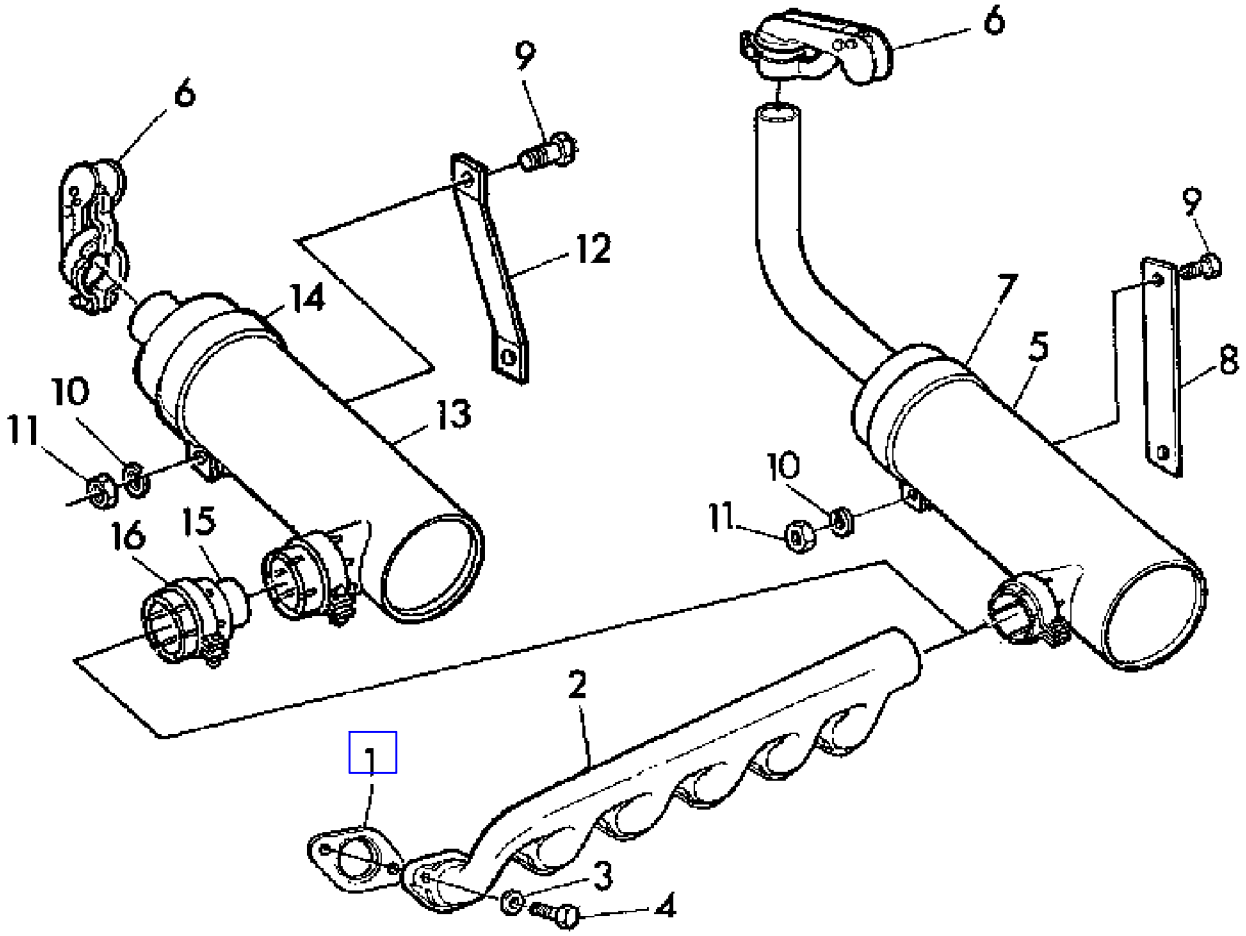

Z 36475

COPYRIGHT©1994 - 2008 DEERE & COMPANY Moline, Illinois All rights reserved

(1D18) MUFFLER AND EXHAUST MANIFOLD
COLLECTEUR D'ECHAPPEMENT ET SILENCIEUX
SCHALLDAEMPFER UND AUSPUFFKRUEMMER
COLLETTORE SCARICO E MARMITTA
SILENCIADOR Y COLECTOR DE ESCAPE
AVGASROR OCH LJUDAMPARE

KEY	PART NO.	PART NAME	QTY	ENGINE SERIAL NO.	955	REMARKS
1	T20006	GASKET	6	- 377809	X	
2	T20092	EXHAUST MANIFOLD	1	- 377809	X	
3	24H1304	WASHER	12	- 377809	X	13/32"X23/32"X.120"
4	19H1732	CAP SCREW	12	- 377809	X	3/8"X1-1/4"
5	AZ20007	MUFFLER	1	- 377809	X	
6	AZ19947	COVER	1	- 377809	X	
7	Z23885	CLAMP	1	- 377809	X	
8	Z31944	STRAP	1	- 377809	X	
9	19M7168	CAP SCREW	1	- 377809	X	M10X30
10	12M7013	LOCK WASHER	1	- 377809	X	10MM
11	14M7140	NUT	1	- 377809	X	M10
12	Z38491	SUPPORT	1		X	(A)
13	AH87289	MUFFLER	1		X	(A)
14	Z38492	CLAMP	1		X	(A)
15	Z38493	ADAPTER	1		X	(A)
16	Z38490	CLAMP	1		X	(A)

(A) FOR COMBINES WITH STRAW COLLECTOR ONLY
UNIQUEMENT POUR MB AVEC COLLECTEUR DE PAILLE
NUR FUER MD MIT STROHSAMMLER
SOLO PER MIETIR.CON COLLETTORE DI PAGLIA
SOLO PARA COSECHADORAS CON RECODEDOR DE PAJA
ENDAST FOR SKORDETROSKA MED HALMSAMLARE

COPYRIGHT©1994 - 2008 DEERE & COMPANY Moline, Illinois All rights reserved

(1D14) OIL BATH-AIR CLEANER
FILTRE A AIR A BAIN D'HUILE
DELBAD-LUFTFILTER
FILTRO ARIA A BAGNO D'OLIO
PURIFICADOR DE AIRE POR BANO DE ACEITE
OLJEBADSLUFTRENARE

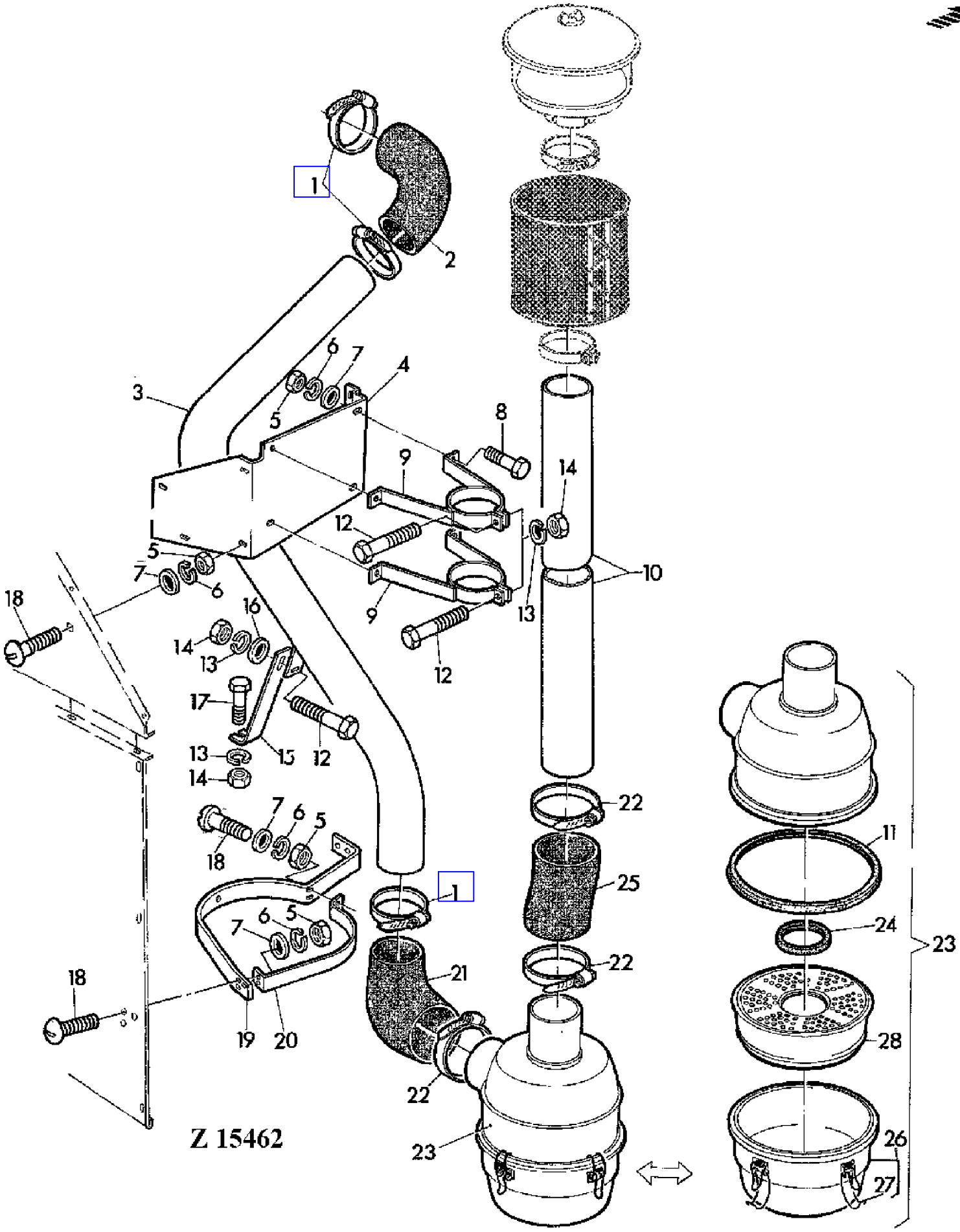

COPYRIGHT©1994 - 2008 DEERE & COMPANY Moline, Illinois All rights reserved

(1D14) OIL BATH-AIR CLEANER
FILTRE A AIR A BAIN D'HUILE
DELBAD-LUFTFILTER
FILTRO ARIA A BAGNO D'OLIO
PURIFICADOR DE AIRE POR BANO DE ACEITE
OLJEBADSLUFTRENARE

KEY	PART NO.	PART NAME	QTY	SERIAL NO.	955	REMARKS
1	Z30340	CLAMP	3		X	
2	Z32741	HOSE	1		X	
3	AZ25746	PIPE	1		X	
4	Z36762	HOLDER	1		X	
5	14M7027	NUT	10		X	M6
6	12M7012	LOCK WASHER	10		X	6MM
7	24M7088	WASHER	10		X	6,6MM
8	19M7375	CAP SCREW	4		X	M6X18
9	AZ25730	CLAMP	2		X	
10	Z36759	PIPE	1		X	
11	Z36769	GASKET	1		X	
12	19M7163	CAP SCREW	3		X	M8X25
13	12M7008	LOCK WASHER	4		X	8MM
14	14M7029	NUT	4		X	M8
15	Z36781	HOLDER	1		X	
16	24M7036	WASHER	AR		X	9MM
17	19M7139	CAP SCREW	1		X	M8X20
18	21M7085	SCREW	6		X	M6X20
19	Z36761	CLAMP	1		X	
20	Z36758	CLAMP	1		X	
21	Z32740	HOSE	1		X	
22	Z29925	CLAMP	3		X	
23	AZ25729	AIR CLEANER	1		X	ASSY
24	Z36768	GASKET	1		X	
25	Z32506	HOSE	1		X	
26	AZ25732	DUST BOWL	1		X	INCL KEY 27
27	AZ25733	LATCH	4		X	
28	AZ25734	FILTER ELEMENT	1		X	INCL KEYS 11,24

COPYRIGHT©1994 - 2008 DEERE & COMPANY Moline, Illinois All rights reserved

(2C17) OIL LINES (CLUTCH)
CANALISATIONS D'HUILE (EMBRAYAGE)
OELLEITUNGEN (KUPPLUNG)
LINEE OLIO (FRIZIONE)
TUBERIAS DE ACEITE (EMBRAGUE)
OLJELEDNINGAR (KOPPLING)

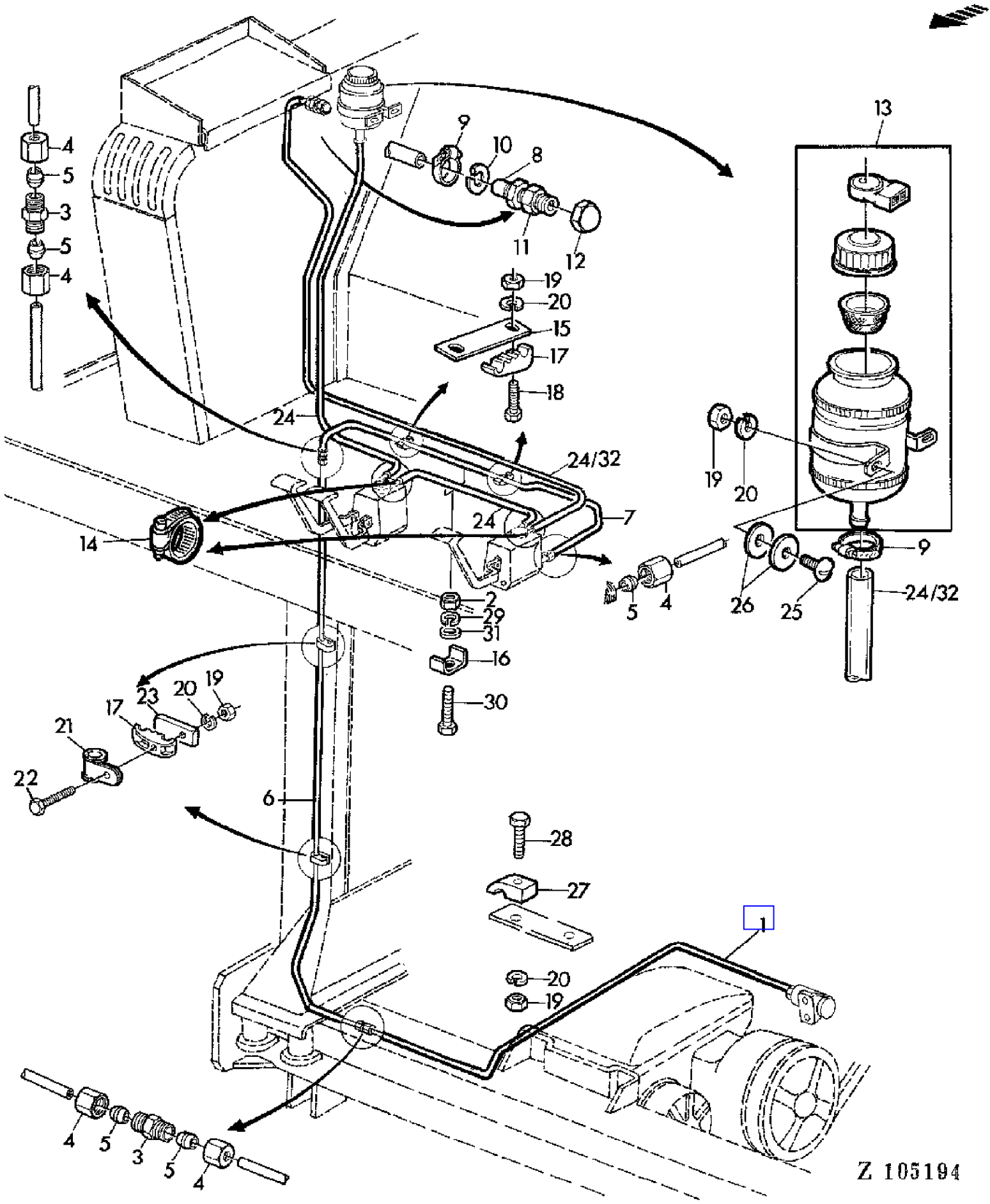

COPYRIGHT©1994 - 2008 DEERE & COMPANY Moline, Illinois All rights reserved

(2C17) OIL LINES (CLUTCH)
CANALISATIONS D'HUILE (EMBRAYAGE)
OELLEITUNGEN (KUPPLUNG)
LINEE OLIO (FRIZIONE)
TUBERIAS DE ACEITE (EMBRAGUE)
OLJELEDNINGAR (KOPPLING)

KEY	PART NO.	PART NAME	QTY	SERIAL NO.		955	REMARKS
1	AZ28110	OIL LINE	1	027003	-	X	
2	14M7028	NUT	AR	027003	-	X	M5
3	Z32960	COUPLING	2	027003	-	X	
4	Z32974	TUBE NUT	6	027003	-	X	
5	Z32995	SLEEVE FITTING	6	027003	-	X	
6	AZ22228	OIL LINE	1	027003	-	X	
7	AZ22227	OIL LINE	1	027003	-	X	
8	Z33654	FITTING	1	027003	-	X	
9	Z28856	CLAMP	2	027003	-	X	
10	12M7008	LOCK WASHER	1	027003	-	X	8MM
11	14M7202	NUT	1	027003	-	X	M8
12	14M7235	NUT	1	027003	-	X	M8X1
13	AZ22695	OIL CUP	1	027003	-	X	
14	Z40671	CLAMP	4			X	
15	Z34959	STRAP	2	027003	-	X	
16	Z30603	CLAMP	AR	027003	-	X	
17	Z30668	CLAMP	2	027003	-	X	
18	19M7177	CAP SCREW	AR	027003	-	X	M6X35
19	14M7027	NUT	AR	027003	-	X	M6
20	12M7012	LOCK WASHER	AR	027003	-	X	6MM
21	Z22067	CLAMP	AR	027003	-	X	
22	19M7547	CAP SCREW	AR	027003	-	X	M6X55
23	Z30667	PLATE	2	027003	-	X	
24	Z34641	HOSE	3	027003	-	X	
25	21M7127	SCREW	2	027003	-	X	M6X18
26	24M7100	WASHER	4	027003	-	X	7MM
27	Z34861	CLAMP	2	027003	-	X	
28	19M7320	CAP SCREW	AR	027003	-	X	M6X40
29	12M7011	LOCK WASHER	AR	027003	-	X	5MM
30	19M7317	SCREW	AR	027003	-	X	M5X30
31	24M7027	WASHER	AR	027003	-	X	5,3MM
32	Z27991	HOSE	1	027003	-	X	

COPYRIGHT©1994 - 2008 DEERE & COMPANY Moline, Illinois All rights reserved

(1B07) OIL PAN
CARTER D'HUILE
OELWANNE
COPPA DELL'OLIO
CARTER DE ACEITE
OLJETRAG

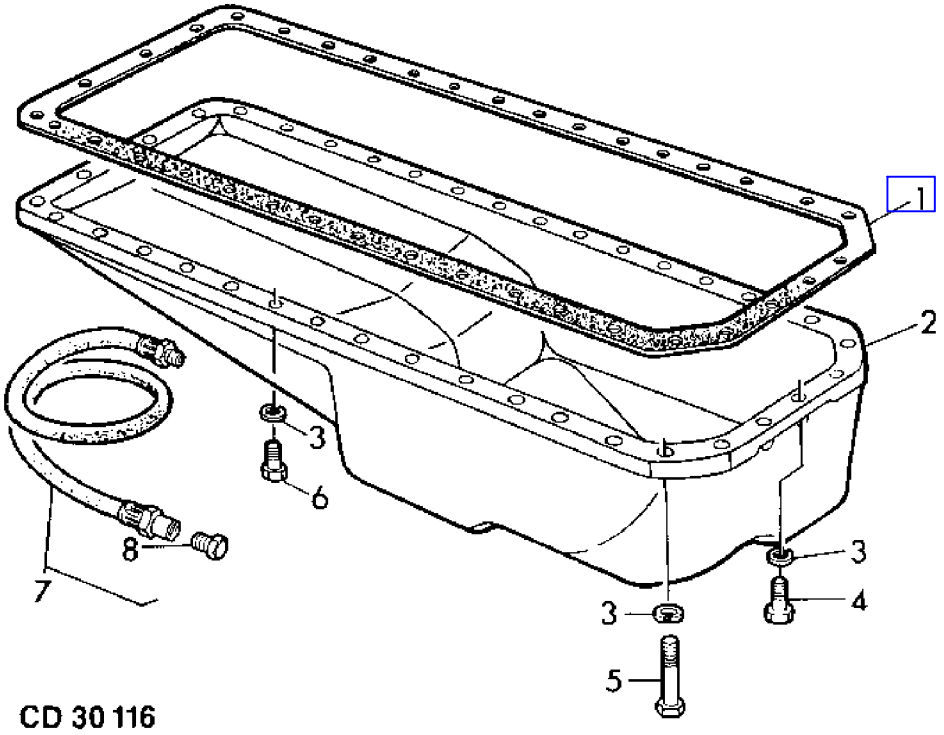

COPYRIGHT©1994 - 2008 DEERE & COMPANY Moline, Illinois All rights reserved

(PC4146) 955 Combine

(1B07) OIL PAN
CARTER D'HUILE
OELWANNE
COPPA DELL'OLIO
CARTER DE ACEITE
OLJETRAG

KEY	PART NO.	PART NAME	QTY	ENGINE SERIAL NO.			955	REMARKS
1	R56933	GASKET	1				X	(SUB FOR T20205)
2	T32234	OIL PAN	1		-	364277	X	
	T23220	OIL PAN	1	364278	-		X	(ORD R55302, R80541, T13213, T20098, 15H624, 15H665)
3	24H1304	WASHER	36				X	13/32"X23/32"X.120"
4	19H988	CAP SCREW	2				X	3/8"X1-1/4"
5	19H1800	CAP SCREW	4				X	3/8"X1-1/2"
6	19H2552	CAP SCREW	30				X	3/8"X1-1/8"
7	RE16668	HOSE	1				X	LGTH = 1750 MM 68.9", INCL KEY 8 (SUB FOR AR93401, AZ16885)
8	R71116	PIPE PLUG	1				X	

COPYRIGHT©1994 - 2008 DEERE & COMPANY Moline, Illinois All rights reserved

(1B08) OIL PAN
CARTER D'HUILE
OELWANNE
COPPA DELL'OLIO
CARTER DE ACEITE
OLJETRAG

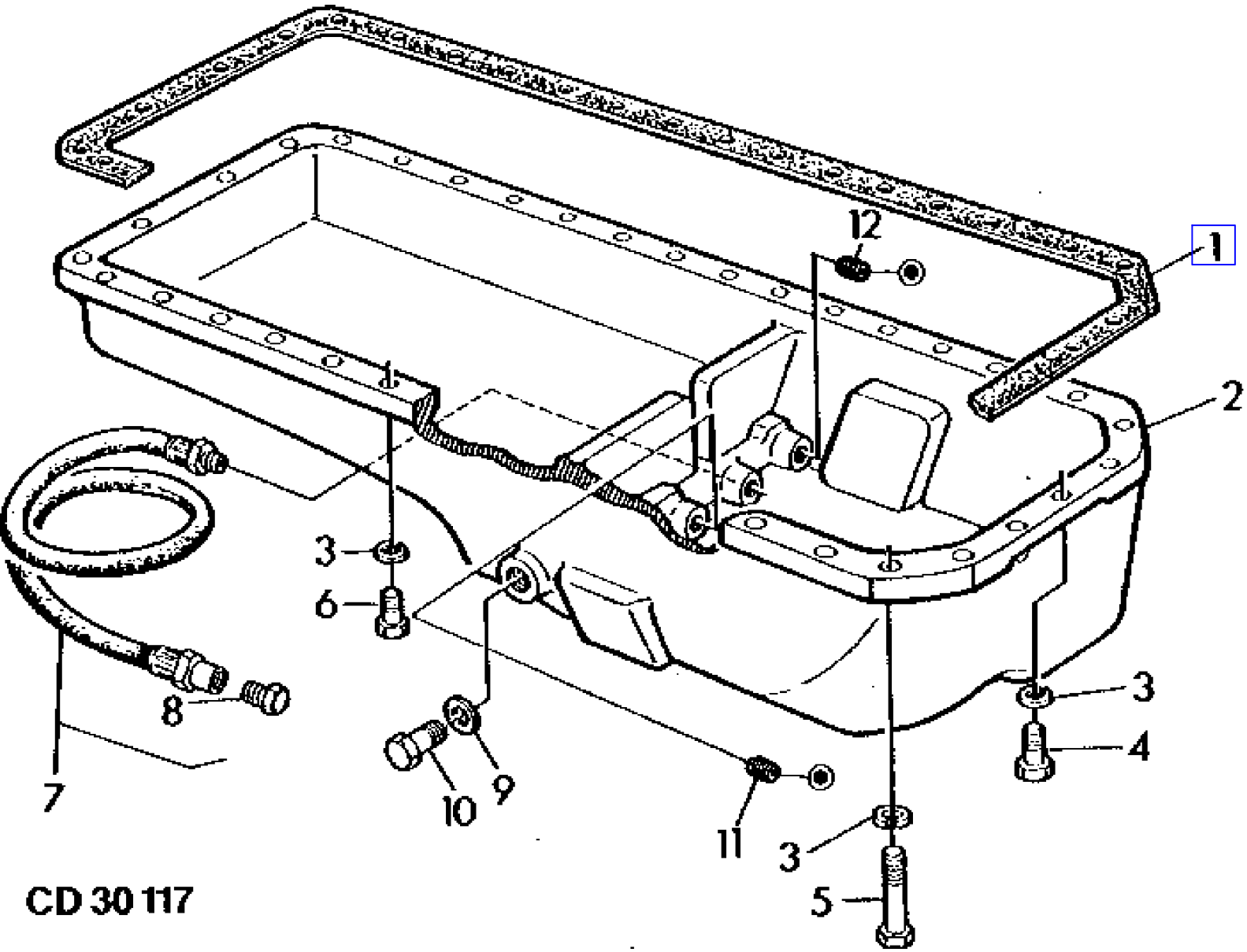

COPYRIGHT©1994 - 2008 DEERE & COMPANY Moline, Illinois All rights reserved

(PC4146) 955 Combine

(1B08) OIL PAN
CARTER D'HUILE
OELWANNE
COPPA DELL'OLIO
CARTER DE ACEITE
OLJETRAG

KEY	PART NO.	PART NAME	QTY	SERIAL NO.	955	REMARKS
1	R56933	GASKET	1		X	
2	R80541	OIL PAN	AR		X	(ORD W/ T13213, T20098, 15H624, 15H665)
3	24H1304	WASHER	36		X	13/32"X23/32"X.120
4	19H988	CAP SCREW	2		X	3/8"X1-1/4"
5	19H1800	CAP SCREW	4		X	3/8"X1-1/2"
6	19H2552	CAP SCREW	30		X	3/8"X1-1/8"
7	RE16668	HOSE	1		X	LGTH = 1750 MM 68.9", INCL KEY 8
8	R71116	PIPE PLUG	1		X	1/8"
9	T13213	WASHER	1		X	
10	T20098	DRAIN PLUG	1		X	
11	15H624	PIPE PLUG	1		X	1/2"
12	15H665	PIPE PLUG	1		X	3/4"

COPYRIGHT©1994 - 2008 DEERE & COMPANY Moline, Illinois All rights reserved

(1B09) OIL PUMP
POMPE A HUILE
OELPUMPE
POMPA OLIO
BOMBA DE ACEITE
OLJEPUMP

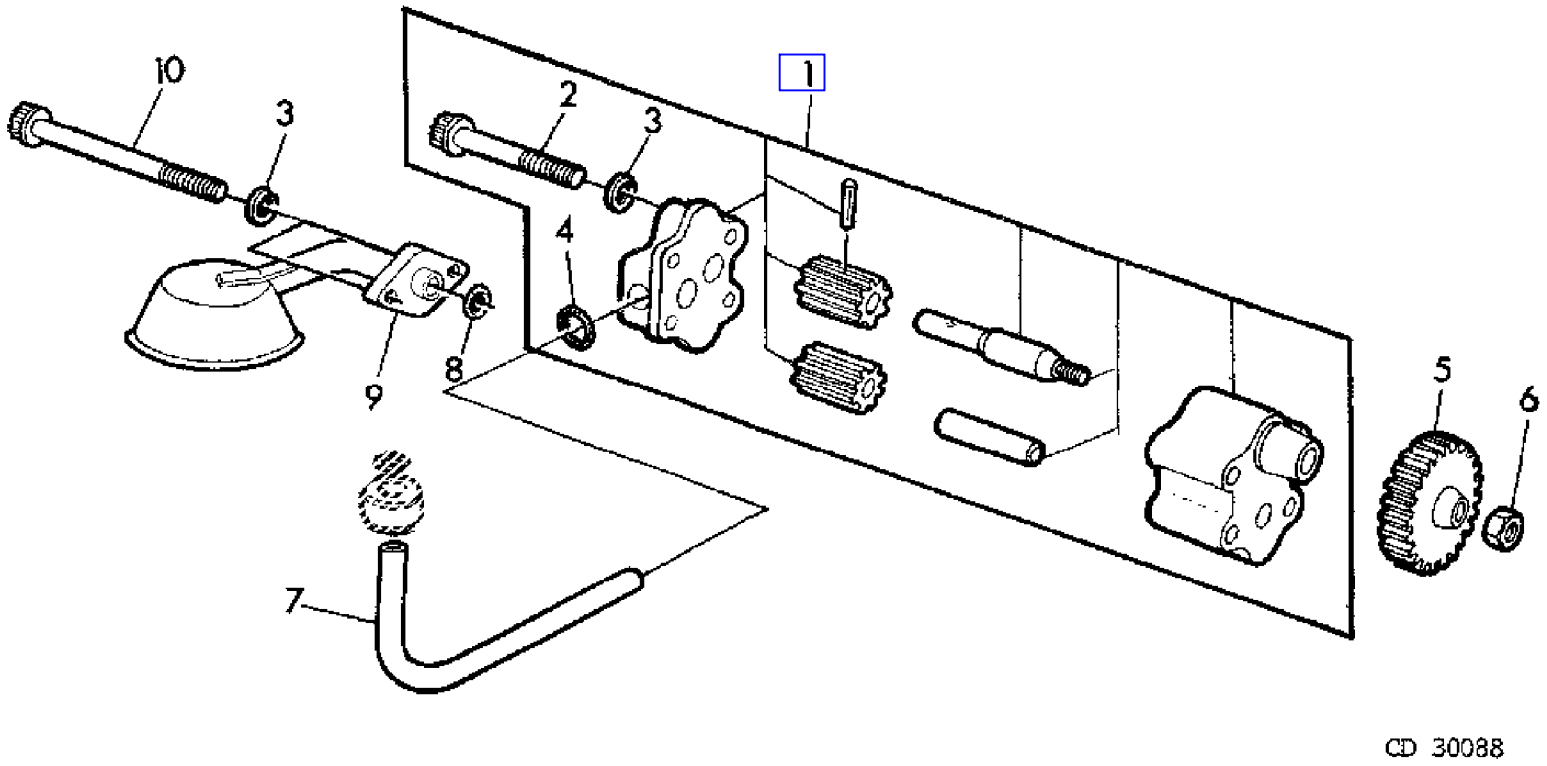

COPYRIGHT©1994 - 2008 DEERE & COMPANY Moline, Illinois All rights reserved

(PC4146) 955 Combine

(1B09) OIL PUMP
POMPE A HUILE
OELPUMPE
POMPA OLIO
BOMBA DE ACEITE
OLJEPUMP

KEY	PART NO.	PART NAME	QTY	SERIAL NO.	955	REMARKS
1	DD14760	OIL PUMP	1		X	(ORD W/ R81871, 14H826) (SUB FOR AR62978, AR62979, M3853T, R53382, R54614, T20091)
2	R57059	CAP SCREW	2		X	3/8"X2-3/4" (SUB FOR 19H1944)
3	12H304	LOCK WASHER	2		X	3/8"
4	R74354	O-RING	1		X	(SUB FOR R27166 APPL)
5	T20298	GEAR	1		X	Z = 33
6	14H826	NUT	1		X	1/2"
7	T20050	OIL TUBE	1		X	
8	R61871	O-RING	1		X	(SUB FOR A4730R APPL)
9	AR59621	OIL PUMP INTAKE	1		X	
10	R81072	CAP SCREW	2		X	3/8"X3.898" (SUB FOR R59409, 19H2228)

COPYRIGHT©1994 - 2008 DEERE & COMPANY Moline, Illinois All rights reserved

(3B10) OPERATING CONTROLS,RIGHT-HAND
COMMANDES DE CONDUITE,COTE DROIT
BEDIENUNGSHEBEL RECHTS
LEVA DESTRA DI AZIONAMENTO
DISPOSITIVOS DE MANDO,LADO DERECHO
MANOVERSPAKAR,HOGER

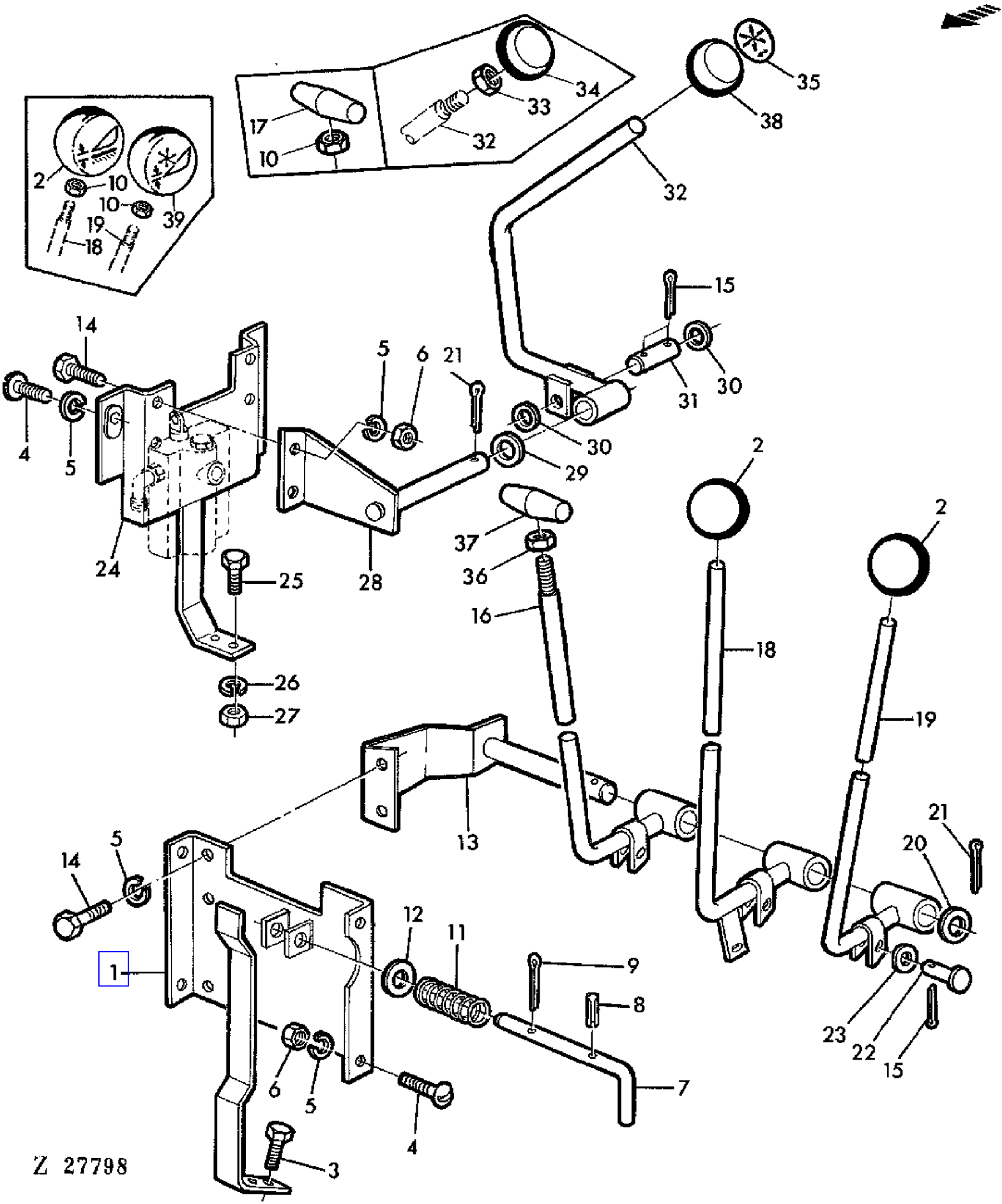

COPYRIGHT©1994 - 2008 DEERE & COMPANY Moline, Illinois All rights reserved

(3B10) OPERATING CONTROLS,RIGHT-HAND
COMMANDES DE CONDUITE,COTE DROIT
BEDIENUNGSHEBEL RECHTS
LEVA DESTRA DI AZIONAMENTO
DISPOSITIVOS DE MANDO,LADO DERECHO
MANOVERSPAKAR,HOGER

KEY	PART NO.	PART NAME	QTY	SERIAL NO.			955	REMARKS
1	AZ18475	PLATE	1				X	
2	Z22923	KNOB	1		-	011231	X	(ORD AZ25310 W/ AZ24086, Z36399)
	AZ24086	KNOB	2	011232	-		X	
3	19M7139	CAP SCREW	2				X	M8X20
4	21M7031	SCREW	6				X	M6X15
5	12M7012	LOCK WASHER	8				X	6MM
6	14M7027	NUT	4				X	M6
7	Z29869	PIN	1				X	
8	34M7010	SPRING PIN	1				X	3X18MM
9	11M7008	COTTER PIN	1				X	2X15MM
10	14M7152	NUT	3		-	025287	X	M10
11	289SEL	SPRING	1				X	
12	24M7055	WASHER	1				X	8,4MM
13	AZ18472	HOLDER	1				X	
14	19M7159	CAP SCREW	4				X	M6X15
15	11M7006	COTTER PIN	3				X	1,5X15MM
16	AZ18478	LEVER	1		-	025287	X	(ORD AZ28713 W/ Z39303, 14M7031)
	AZ28713	LEVER	1	025288	-		X	(SUB FOR AZ18478)
17	Z30244	GRIP	1		-	025287	X	(A)
18	AZ18477	LEVER	1		-	011231	X	(ORD AZ25310 W/ AZ24086, Z36399)
	AZ25310	LEVER	1	011232	-		X	
19	AZ18476	LEVER	1		-	011231	X	(ORD AZ25311 W/ AZ24086, Z36399)
	AZ25311	LEVER	1	011232	-		X	
20	24M7043	WASHER	1				X	12MM
21	11M7014	COTTER PIN	1				X	3X25MM
22	Z29996	PIN	3				X	
23	24M7027	WASHER	3				X	5,3MM
24	AZ19820	BRACKET	1				X	
25	19M7139	CAP SCREW	2				X	M8X20
26	12M7008	LOCK WASHER	2				X	8MM
27	14M7029	NUT	2				X	M8
28	AZ24340	SUPPORT	1				X	
29	24M7043	WASHER	1				X	12MM
30	24M7027	WASHER	4				X	5,4MM
31	Z29996	PIN	1				X	
32	AZ21025	LEVER	1		-	025287	X	(ORD AZ28715 W/ AZ29353)
	AZ28715	LEVER	1	025288	-		X	(SUB FOR AZ21025)
33	Z23533	NUT	1		-	025287	X	
34	Z31208	KNOB	1		-	025287	X	

(A) RED
ROUGE
ROT
ROSSO
ROJO
ROED

COPYRIGHT©1994 - 2008 DEERE & COMPANY Moline, Illinois All rights reserved

(3B10) OPERATING CONTROLS,RIGHT-HAND
COMMANDES DE CONDUITE,COTE DROIT
BEDIENUNGSHEBEL RECHTS
LEVA DESTRA DI AZIONAMENTO
DISPOSITIVOS DE MANDO,LADO DERECHO
MANOVERSPAKAR,HOGER

KEY	PART NO.	PART NAME	QTY	SERIAL NO.			955	REMARKS
35	Z31207	DECAL	1				X	
36	14M7031	NUT	1	025288	-		X	M12
37	Z39303	KNOB	1	025288	-		X	
38	AZ30369	KNOB	1	025288	-		X	(SUB FOR AZ29353)
39	Z22922	KNOB	1		-	011231	X	(ORD AZ25311 W/ AZ24086, Z36399)

(A) RED
ROUGE
ROT
ROSSO
ROJO
ROED

COPYRIGHT©1994 - 2008 DEERE & COMPANY Moline, Illinois All rights reserved

(3D10) OPERATOR'S CAB-HEATER PARTS
CABINE-ELEMENTS DU CHAUFFAGE
FAHRERHAUS-HEIZUNGSTEILE
CABINA-PARTI DI RISCALDAMENTO
ELEMENTOS PARA LA CALEFACCION DE LA CABINA
FOERARHYTT-VAERMESYSTEMETS DETALJER

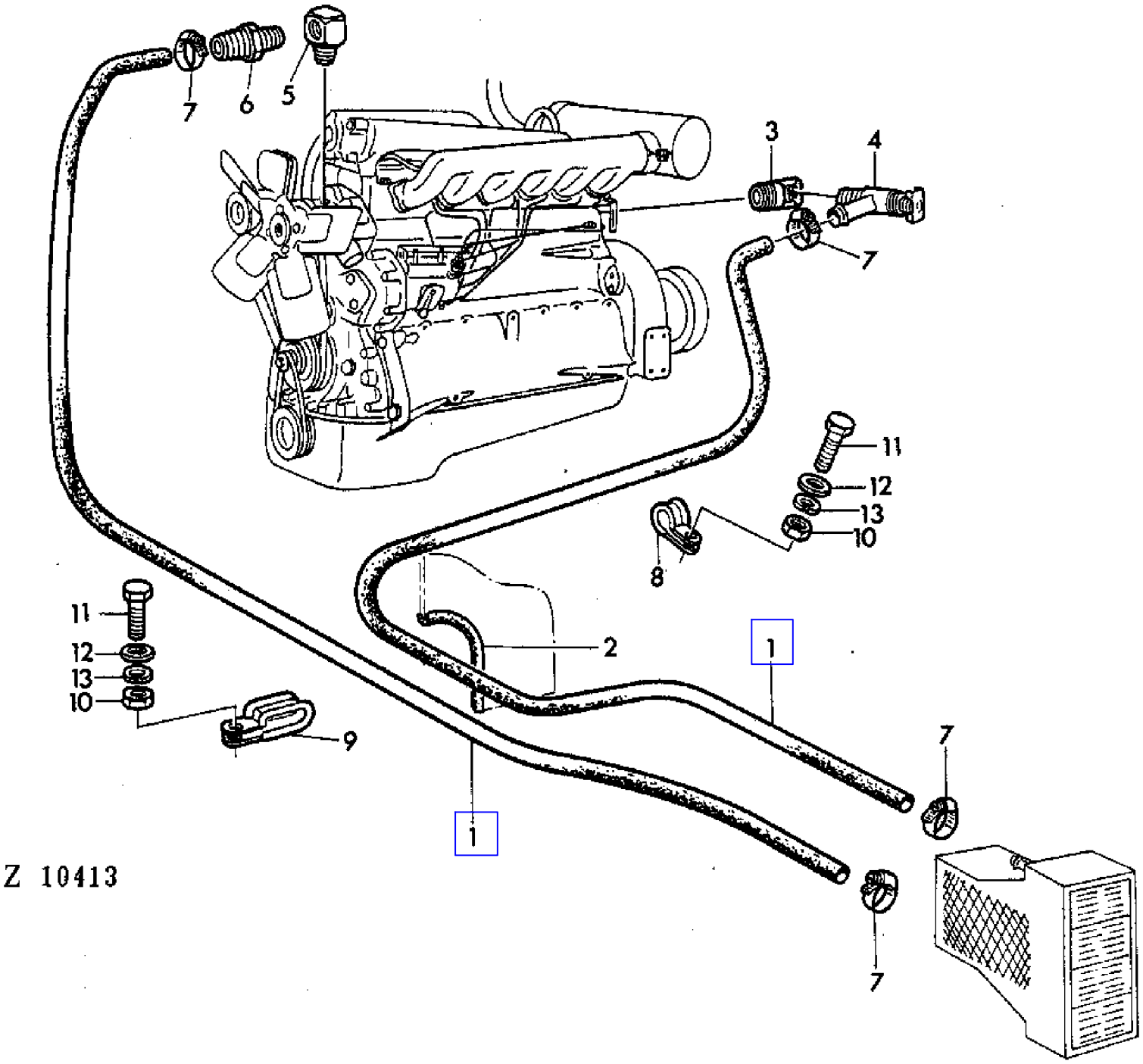

COPYRIGHT©1994 - 2008 DEERE & COMPANY Moline, Illinois All rights reserved

(3D10) OPERATOR'S CAB-HEATER PARTS
CABINE-ELEMENTS DU CHAUFFAGE
FAHRERHAUS-HEIZUNGSTEILE
CABINA-PARTI DI RISCALDAMENTO
ELEMENTOS PARA LA CALEFACCION DE LA CABINA
FOERARHYTT-VAERMESYSTEMETS DETALJER

KEY	PART NO.	PART NAME	QTY	SERIAL NO.	955	REMARKS
1	VS907.05.02	HOSE	2		X	
2	Z40677	GUARD	1		X	(SUB FOR Z34892)
3	T37027	FITTING	1		X	
4	AT35831	VALVE	1		X	
5	T37041	ELBOW FITTING	1		X	
6	R41985	FITTING	1		X	(SUB FOR H23196)
7	VS905.01.42	CLAMP	4		X	
8	Z28191	CLAMP	2		X	
9	VS905.01.82	CLAMP	4		X	
10	14M7194	NUT	5		X	M6
11	19M7077	CAP SCREW	6		X	M6X20
12	24M7054	WASHER	6		X	6,4MM
13	12M7012	LOCK WASHER	6		X	6MM

COPYRIGHT©1994 - 2008 DEERE & COMPANY Moline, Illinois All rights reserved

(3A13) OPERATOR'S PLATFORM
PLATE-FORME DE CONDUITE
FAHRERPLATTFORM
PIATTAFORMA DELL'OPERATORE
PLATAFORMA DE CONDUCCION
FORARPLATTFORM

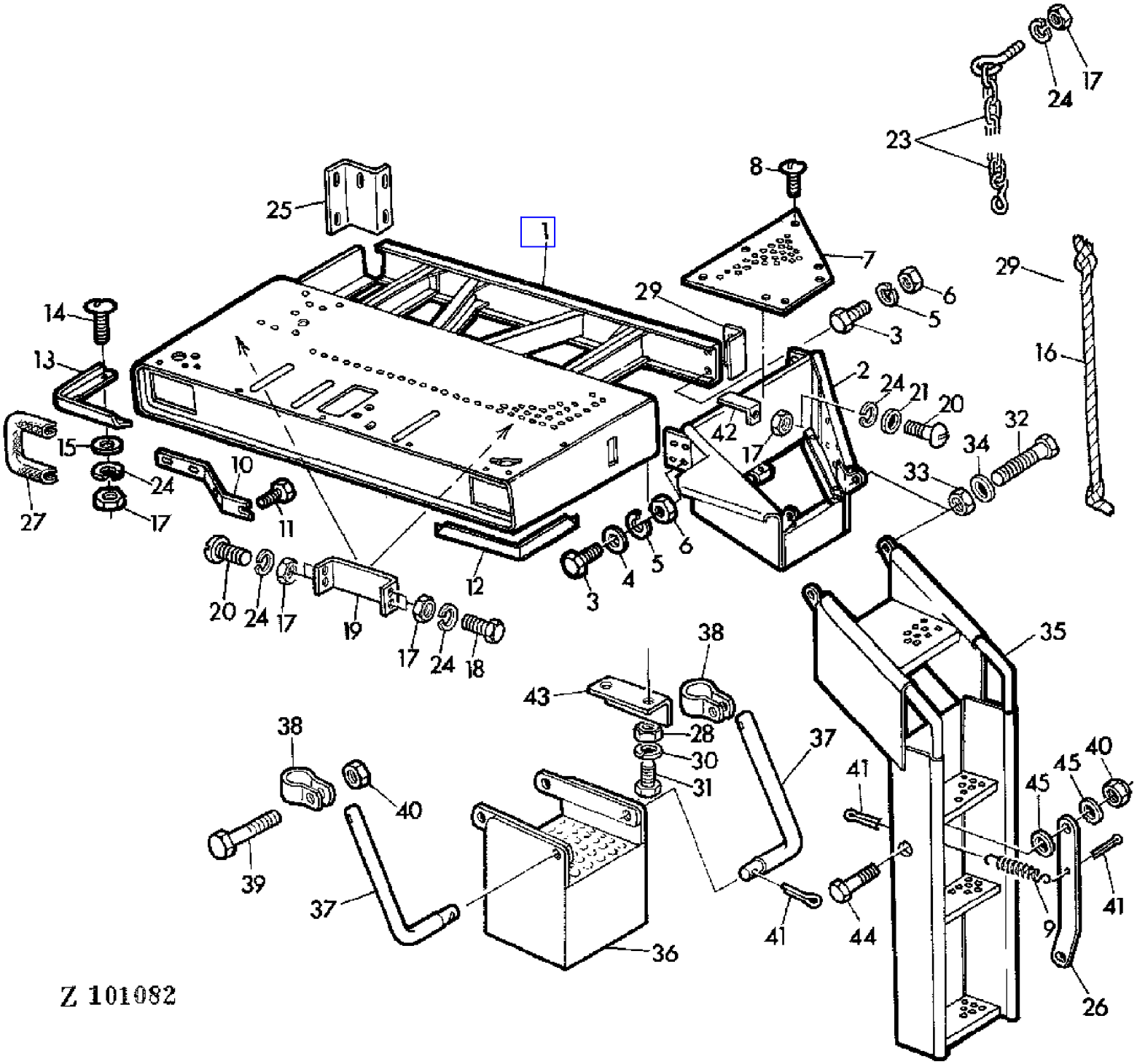

COPYRIGHT©1994 - 2008 DEERE & COMPANY Moline, Illinois All rights reserved

(3A13) OPERATOR'S PLATFORM
PLATE-FORME DE CONDUITE
FAHRERPLATTFORM
PIATTAFORMA DELL'OPERATORE
PLATAFORMA DE CONDUCCION
FORARPLATTFORM

KEY	PART NO.	PART NAME	QTY	SERIAL NO.			955	REMARKS
1	AZ23185	PLATFORM	1		-	026722	X	
	AZ28891	PLATFORM	1	026723	-		X	
2	AZ24891	LADDER	1				X	(SUB FOR AZ22665)
3	19M7139	CAP SCREW	AR				X	M8X20
4	24M7055	WASHER	AR				X	8,4MM
5	12M7008	LOCK WASHER	AR				X	8MM
6	14M7029	NUT	AR				X	M8
7	AZ22664	SHEET	1				X	
8	21M7081	SCREW	7				X	M8X15
9	L12259	SPRING	1	020423	-		X	
10	Z33698	BRACE	2				X	
11	19M7162	CAP SCREW	2				X	M8X16
12	Z33703	SHIELD	1				X	
13	Z33704	SHIELD	1				X	
14	21M7087	SCREW	AR				X	M6X12
15	24M7100	WASHER	AR				X	7MM
16	Z30198	ROPE	1		-	020422	X	LGTH = 1400 MM
	Z41543	ROPE	1	020423	-		X	LGTH = 2400 MM (SUB FOR Z39019)
17	14M7027	NUT	AR				X	M6
18	19M7159	CAP SCREW	AR				X	M6X16
19	Z33697	HOLDER	2				X	
20	21M7031	SCREW	AR				X	M6X15
21	24M7088	WASHER	AR				X	6,6MM
22	Z32322	SPACER	2				X	
23	AZ26783	LINK CHAIN	1				X	(SUB FOR AZ21761)
24	12M7012	LOCK WASHER	AR				X	6MM
25	Z33696	REINFORCEMENT	1				X	
	Z33696	REINFORCEMENT	1				X	
26	Z39025	LEVER	1	020423	-		X	
27	Z37304	GUARD	1				X	(SUB FOR Z34893)
28	14M7140	NUT	2				X	M10
29	Z35167	ANGLE	1				X	
30	12M7013	LOCK WASHER	2				X	10MM
31	19M7166	CAP SCREW	2				X	M10X20
32	19M7646	CAP SCREW	2				X	M14X25
33	14M7169	LOCK NUT	2				X	M14
34	24M7085	WASHER	2				X	15MM
35	AZ22623	LADDER	1				X	
36	AZ17359	STEP	1				X	
37	Z28804	PIN	2				X	
38	Z28802	CLAMP	2				X	
39	19M7323	CAP SCREW	2				X	M8X40
40	14M7166	LOCK NUT	AR				X	M8
41	11M7020	COTTER PIN	AR				X	4X25MM

COPYRIGHT©1994 - 2008 DEERE & COMPANY Moline, Illinois All rights reserved

(3A13) OPERATOR'S PLATFORM
PLATE-FORME DE CONDUITE
FAHRERPLATTFORM
PIATTAFORMA DELL'OPERATORE
PLATAFORMA DE CONDUCCION
FORARPLATTFORM

KEY	PART NO.	PART NAME	QTY	SERIAL NO.		955	REMARKS
42	L16606	ANGLE	1			X	
43	Z35166	ANGLE	1			X	
44	19M7288	CAP SCREW	AR	020423	-	X	M8X30
45	24M7036	WASHER	AR	020423	-	X	9MM

COPYRIGHT©1994 - 2008 DEERE & COMPANY Moline, Illinois All rights reserved

(PC4146) 955 Combine

(3A21) OPERATOR'S SEAT
SIEGE
FAHRERSITZ
SEDILE
ASIENTO DEL CONDUCTOR
FORARSATE

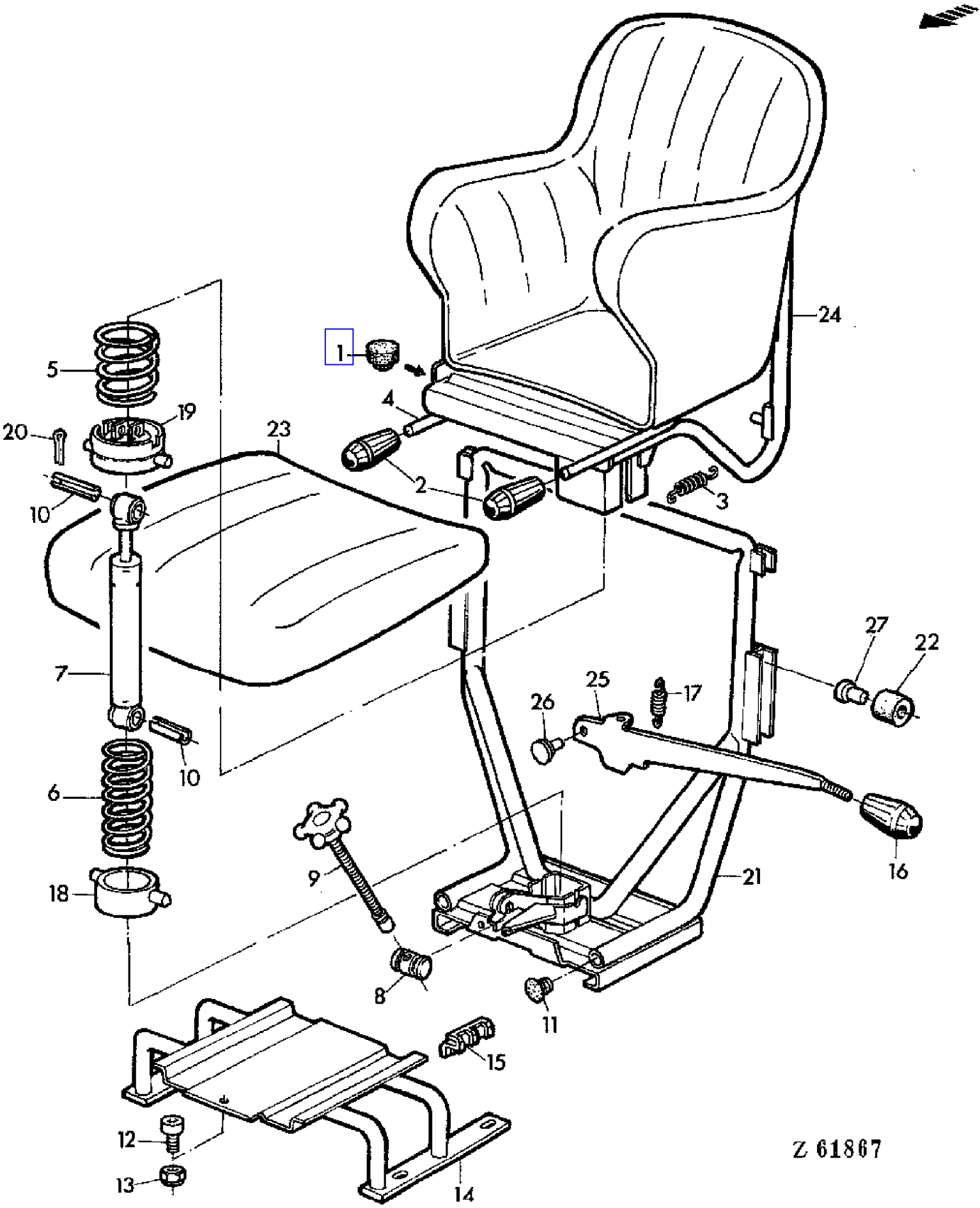

COPYRIGHT©1994 - 2008 DEERE & COMPANY Moline, Illinois All rights reserved

(PC4146) 955 Combine

(3A21) OPERATOR'S SEAT
SIEGE
FAHRERSITZ
SEDILE
ASIENTO DEL CONDUCTOR
FORARSATE

KEY	PART NO.	PART NAME	QTY	SERIAL NO.	955	REMARKS
1	Z32104	STOP	2		X	
2	Z32110	GRIP	2		X	
3	Z32108	SPRING	1	- XXXX	X	
4	AZ20938	LEVER	1		X	
5	Z31241	COMPRESSION SPRING	1		X	
6	Z31244	COMPRESSION SPRING	1		X	
7	AZ20937	ABSORBER	1		X	
8	Z32105	TOGGLE	1		X	
9	AZ20935	SCREW	1		X	
10	34M7047	SPRING PIN	2	- XXXX	X	8X40MM
11	Z31240	PLUG	2	- XXXX	X	
12	19M7159	CAP SCREW	1	- XXXX	X	M6X15
13	14M7027	NUT	1	- XXXX	X	M6
14	AZ20939	BASE	1	- XXXX	X	
15	Z31250	ALIGNER	4	- XXXX	X	
16	Z32109	KNOB	1	- XXXX	X	
17	Z31243	EXTENSION SPRING	1	- XXXX	X	
18	AZ20936	CAGE	1		X	
19	AZ20934	CAGE	1		X	
20	11M7010	SPRING PIN	1		X	3X18MM
21	AZ20942	SUPPORT	1	- XXXX	X	
22	Z33800	ROLLER	4		X	(ORD W/ KEY 27)
23	AZ20940	CUSHION	1		X	
24	AZ20941	SEAT	1		X	
25	Z32111	DETENT	1	- XXXX	X	
26	Z32106	PIN	1	- XXXX	X	
27	Z33801	PIN	4		X	

COPYRIGHT©1994 - 2008 DEERE & COMPANY Moline, Illinois All rights reserved

(3A23) OPERATOR'S SEAT
SIEGE
FAHRERSITZ
SEDILE
ASIENTO DEL CONDUCTOR
FORARSATE

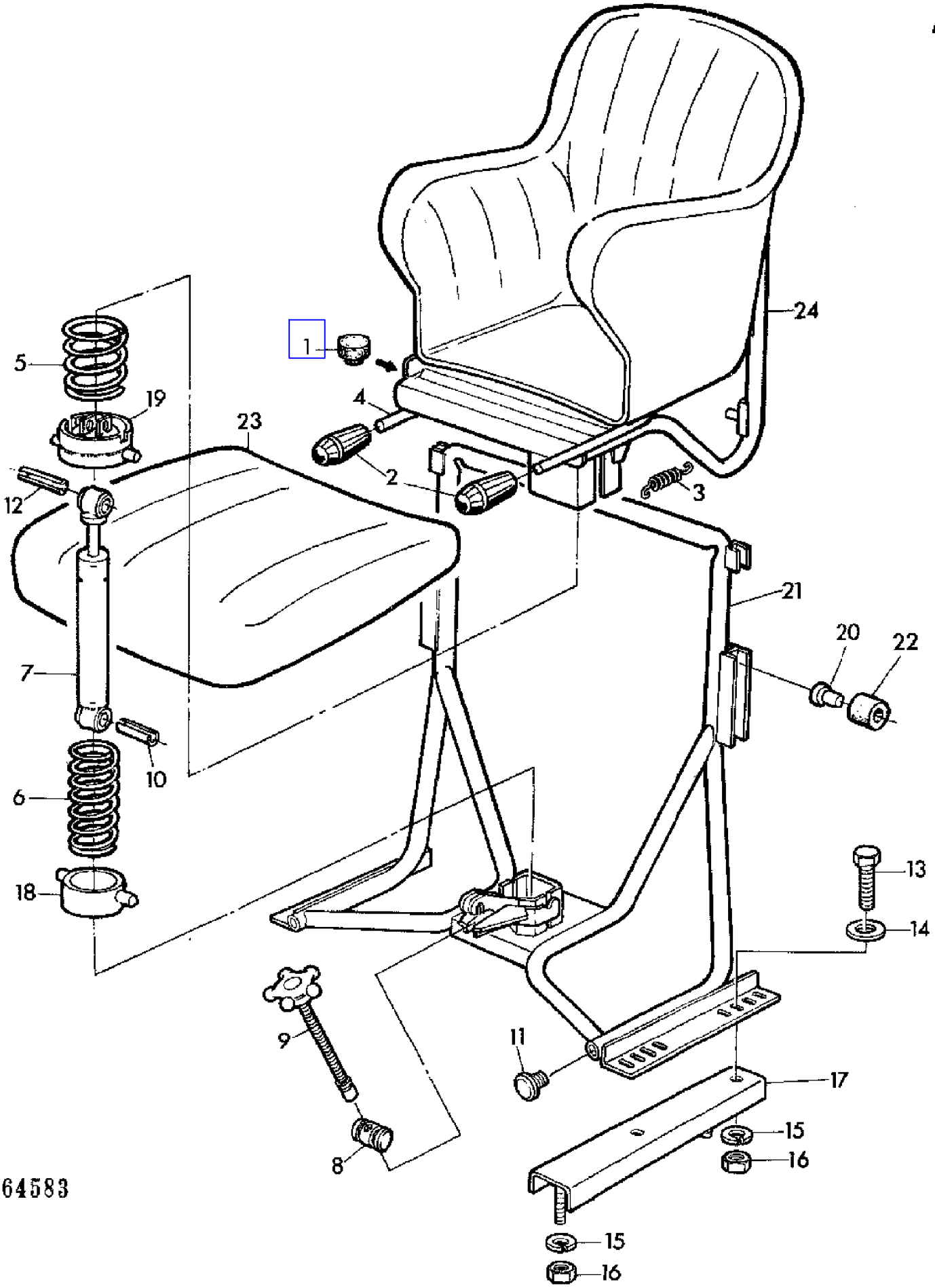

COPYRIGHT©1994 - 2008 DEERE & COMPANY Moline, Illinois All rights reserved

(PC4146) 955 Combine

(3A23) OPERATOR'S SEAT
SIEGE
FAHRERSITZ
SEDILE
ASIENTO DEL CONDUCTOR
FORARSATE

KEY	PART NO.	PART NAME	QTY	SERIAL NO.		955	REMARKS
1	Z32104	STOP	2			X	
2	Z32110	GRIP	2			X	
3	Z35711	EXTENSION SPRING	1	XXXX	-	X	
4	AZ20938	LEVER	1			X	
5	Z31241	COMPRESSION SPRING	1			X	
6	Z31244	COMPRESSION SPRING	1			X	
7	AZ20937	ABSORBER	1			X	
8	Z32105	TOGGLE	1			X	
9	AZ20935	SCREW	1			X	
10	34M7046	SPRING PIN	1	XXXX	-	X	8X36MM
11	Z35712	PLUG	4	XXXX	-	X	
12	34M7049	SPRING PIN	1	XXXX	-	X	8X50MM
13	19M7166	CAP SCREW	4	XXXX	-	X	M10X20
14	24M7028	WASHER	4	XXXX	-	X	10,5MM
15	12M7013	LOCK WASHER	4	XXXX	-	X	10MM
16	14M7140	NUT	4	XXXX	-	X	M10
17	AZ24676	RAIL	2	XXXX	-	X	
18	AZ20936	CAGE	1			X	
19	AZ20934	CAGE	1			X	
20	Z33801	PIN	4			X	
21	AZ24675	SUPPORT	1	XXXX	-	X	
22	Z33800	ROLLER	4			X	
23	AZ20940	CUSHION	1			X	
24	AZ20941	SEAT	1			X	

COPYRIGHT©1994 - 2008 DEERE & COMPANY Moline, Illinois All rights reserved

(3G16) PARTS FOR HYDROSTATIC REEL DRIVE
PIECES DE MONTAGE DE L'ENTRAINEMENT HYDROST. DU RABATTEUR
ANBAUTEILE FUER HYDROSTATISCHEN HASPELANTRIEB
FISSAGGIO PER COMANDO IDROST. ASPO
PIEZAS DE MONTAJE PARA LA TRANSM.HIDROSTATICA DEL MOLINETE
MONTERINGSDELAR FOER HYDROST. HASPELDRIVNING

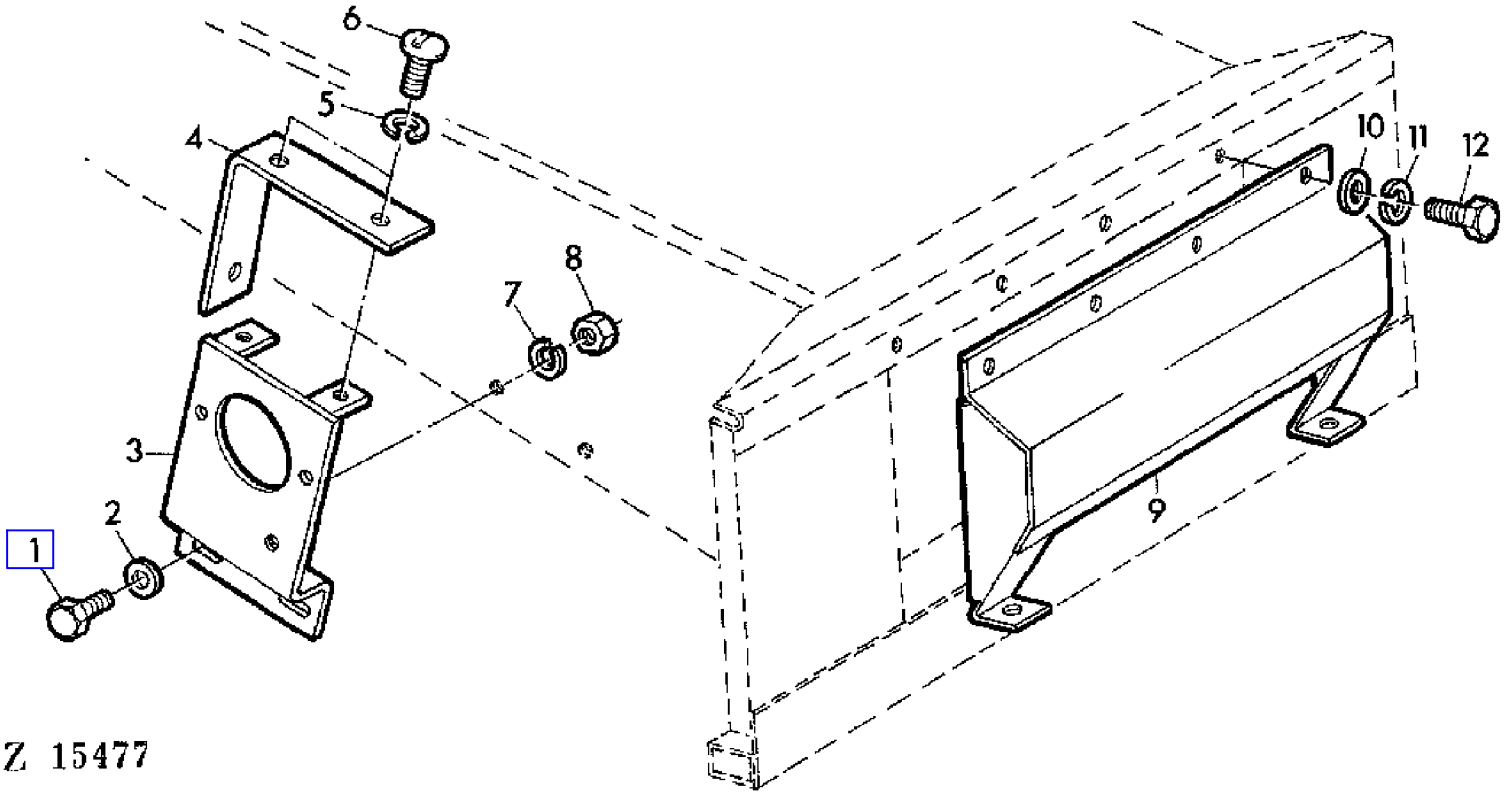

COPYRIGHT©1994 - 2008 DEERE & COMPANY Moline, Illinois All rights reserved

(3G16) PARTS FOR HYDROSTATIC REEL DRIVE
PIECES DE MONTAGE DE L'ENTRAINEMENT HYDROST. DU RABATTEUR
ANBAUTEILE FUER HYDROSTATISCHEN HASPELANTRIEB
FISSAGGIO PER COMANDO IDROST. ASPO
PIEZAS DE MONTAJE PARA LA TRANSM.HIDROSTATICA DEL MOLINETE
MONTERINGSDELAR FOER HYDROST. HASPELDRIVNING

KEY	PART NO.	PART NAME	QTY	SERIAL NO.	955	REMARKS
1	19M7168	CAP SCREW	2		X	M10X30
2	24M7040	WASHER	2		X	11MM
3	AZ25028	BRACKET	1		X	
4	Z36047	HOLDER	1		X	
5	12M7012	LOCK WASHER	3		X	6MM
6	21M7083	SCREW	3		X	M6X10
7	12M7013	LOCK WASHER	2		X	10MM
8	14M7140	NUT	2		X	M10
9	AZ25089	SHIELD	1		X	AR (ORD AZ33608, Z30138, Z30139, (2) Z30527)
10	24M7036	WASHER	4		X	9MM
11	12M7008	LOCK WASHER	4		X	8MM
12	19M7284	CAP SCREW	4		X	M8X18

COPYRIGHT©1994 - 2008 DEERE & COMPANY Moline, Illinois All rights reserved

(1B06) PISTON/CONNECTING ROD
PISTON/BIELLE
KOLBEN/PLEUELSTANGE
PISTONE/BIELLA
PISTON/BIELA
KOLV/KOLVSTAKE

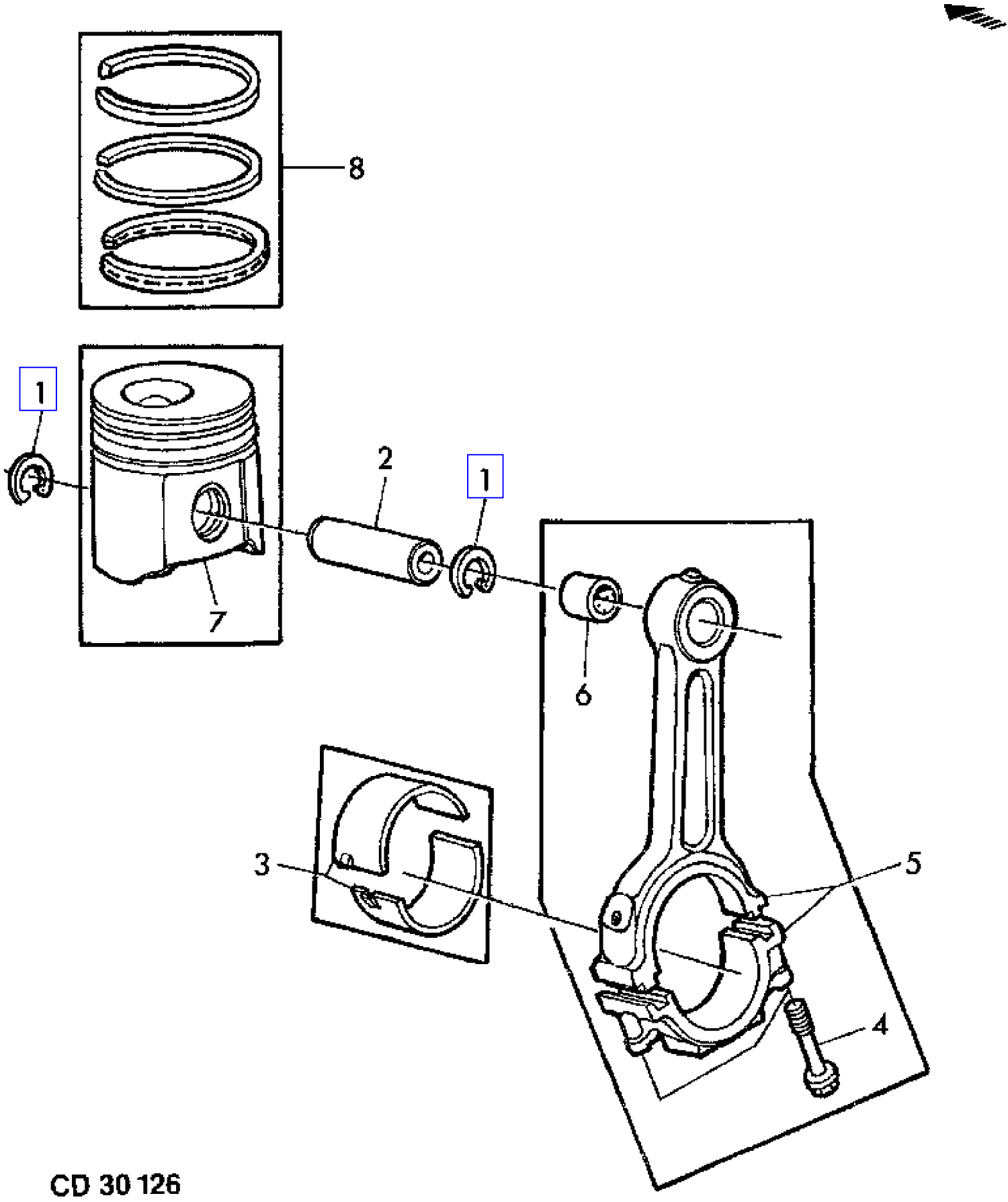

COPYRIGHT©1994 - 2008 DEERE & COMPANY Moline, Illinois All rights reserved

(PC4146) 955 Combine

(1B06) PISTON/CONNECTING ROD
PISTON/BIELLE
KOLBEN/PLEUELSTANGE
PISTONE/BIELLA
PISTON/BIELA
KOLV/KOLVSTAKE

KEY	PART NO.	PART NAME	QTY	ENGINE SERIAL NO.			955	REMARKS
1	M41029	SNAP RING	12				X	PACKG (6)
2	R51731	PISTON PIN	6				X	
3	RE27348	KIT	6				X	ID = STANDARD (KIT (2) R83379) (SUB FOR AT21138, KIT (2) T20011)
	RE27349	KIT	AR				X	ID = -0.254 MM 0.010" (KIT (2) R87748) (SUB FOR AT21122, KIT (2) T23566, (2) T23568, AT21124)
	RE27358	KIT	AR				X	ID = -0.508 MM 0.020" (KIT (2) R87754) (SUB FOR AT21126, KIT (2) T23570)
	RE27364	BEARING KIT	AR				X	ID = -0.762 MM 0.030" (KIT (2) R87757) (SUB FOR AT21128, KIT (2) T23572)
4	R74194	SCREW	2				X	(FOR AR55978) (SUB FOR T20009)
	R80033	SCREW	2				X	(FOR RE16495)
5	AR55978	CONNECTING ROD	6				X	(ORD RE16495)
	RE16495	CONNECTING ROD	6				X	(SUB FOR AR55978)
6	R55647	BUSHING	1				X	
7	AR55984	PISTON	6		-	269717	X	NSEP (ORD AR77762, OR AR87736)
	AR77762	PISTON	AR	269718	-	377809	X	(MARKED"B")
	AR87736	PISTON	AR	269718	-	377809	X	(MARKED"H")
	.....	PISTON	AR	377810	-		X	NSEP (ORD RE24458, OR RE24539)
8	AR55759	PISTON RING KIT	6		-	377809	X	KIT (3)
	RE15674	PISTON RING KIT	6	377810	-		X	KIT (3) (SUB FOR DD11831)

COPYRIGHT©1994 - 2008 DEERE & COMPANY Moline, Illinois All rights reserved

(4C01) PLANETARY GEAR DRIVE (CROSS SHAKER)
TRAIN PLANETAIRE - SECOUEUR ROTATIF
PLANETENGETRIEBE-QUERSCHUETTLER
INGRANAGGIO A PLANETARI (SCHOTITORE INCROCIATO)
REDUCCION POR PLANETARIOS (SACUDIDOR TRANSVERSAL)
PLANETDREV FOR TVARLIGGANDE SKAKARE

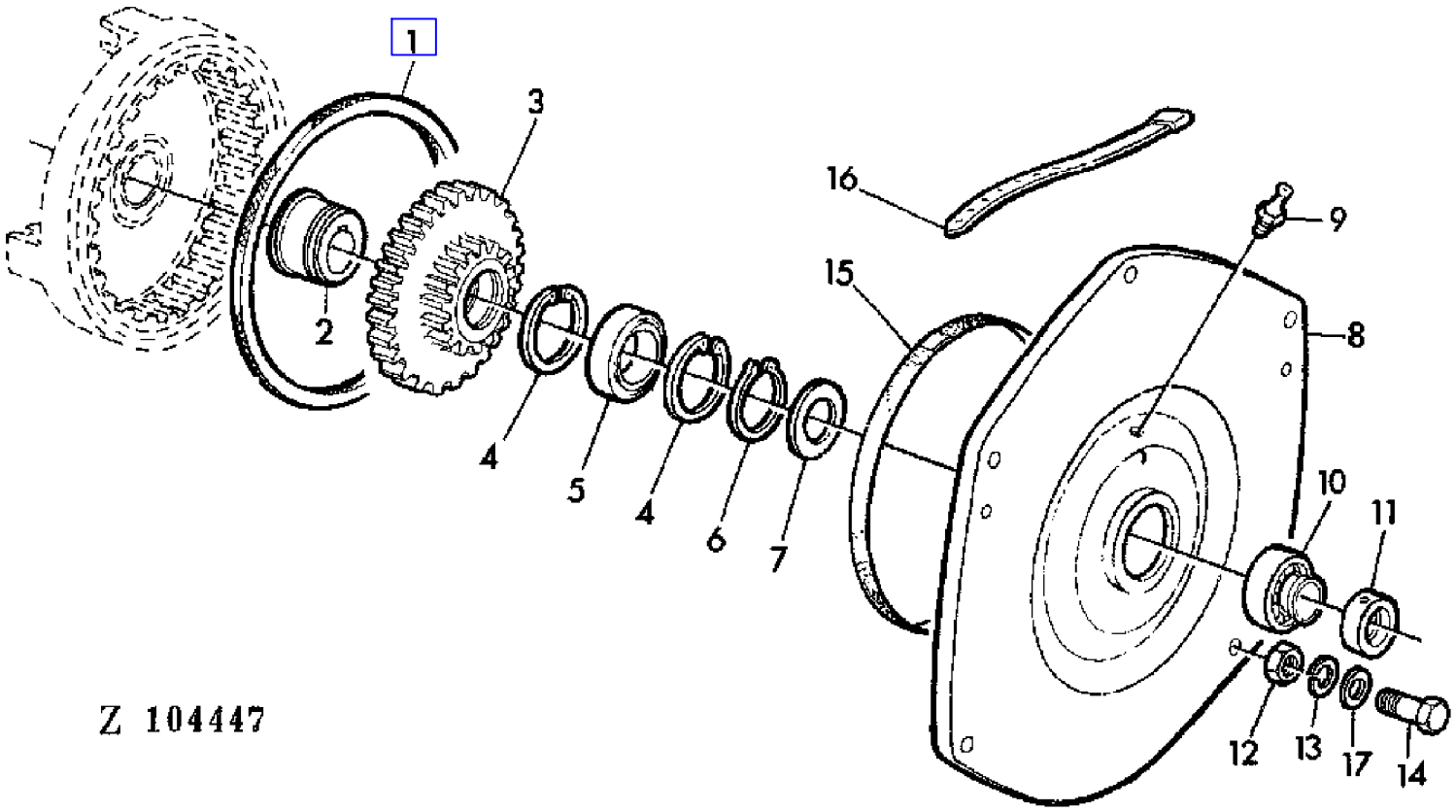

COPYRIGHT©1994 - 2008 DEERE & COMPANY Moline, Illinois All rights reserved

(4C01) PLANETARY GEAR DRIVE (CROSS SHAKER)
TRAIN PLANETAIRE - SECOUEUR ROTATIF
PLANETENGETRIEBE-QUERSCHUETTLER
INGRANAGGIO A PLANETARI (SCHOTITORE INCROCIATO)
REDUCCION POR PLANETARIOS (SACUDIDOR TRANSVERSAL)
PLANETDREV FOR TVARLIGGANDE SKAKARE

KEY	PART NO.	PART NAME	QTY	SERIAL NO.		955	REMARKS
1	Z35972	FELT	1	026423	-	X	
2	Z35964	ECCENTRIC	1	026423	-	X	
3	Z11056	GEAR	1	026423	-	X	
4	40M5099	SNAP RING	2	026423	-	X	75X2,5MM
5	JD33004	BALL BEARING	1	026423	-	X	
6	40M1837	SNAP RING	1	026423	-	X	45X1,5MM
7	24M7137	WASHER	1	026423	-	X	24MM
8	Z11058	FLANGE	1	026423	-	X	
9	58M7004	LUBRICATION FITTING	1	026423	-	X	
10	JD39102	BALL BEARING	1	026423	-	X	
11	AZ10044	ECCENTRIC LOCKING COLLAR	1	026423	-	X	
12	14M7029	NUT	7	026423	-	X	M8
13	12M7008	LOCK WASHER	7	026423	-	X	8MM
14	19M7163	CAP SCREW	7	026423	-	X	M8X25
15	Z40982	GASKET	1	026423	-	X	
16	Z40981	CLAMP	1	026423	-	X	
17	24M7024	WASHER	AR			X	9,5MM

COPYRIGHT©1994 - 2008 DEERE & COMPANY Moline, Illinois All rights reserved

(2B22) PLATFORM LIFT CYLINDER
PLATE-FORME DE COUPE-VERINS
SCHNEIDWERK-HUBZYLINDER
CILINDRI SOLLEVAMENTO PIATTAFORMA
CILINDROS ELEVADORES DE LA PLATAFORMA DE CORTE
SKAERBORDETS LYFTCYLINDRAR

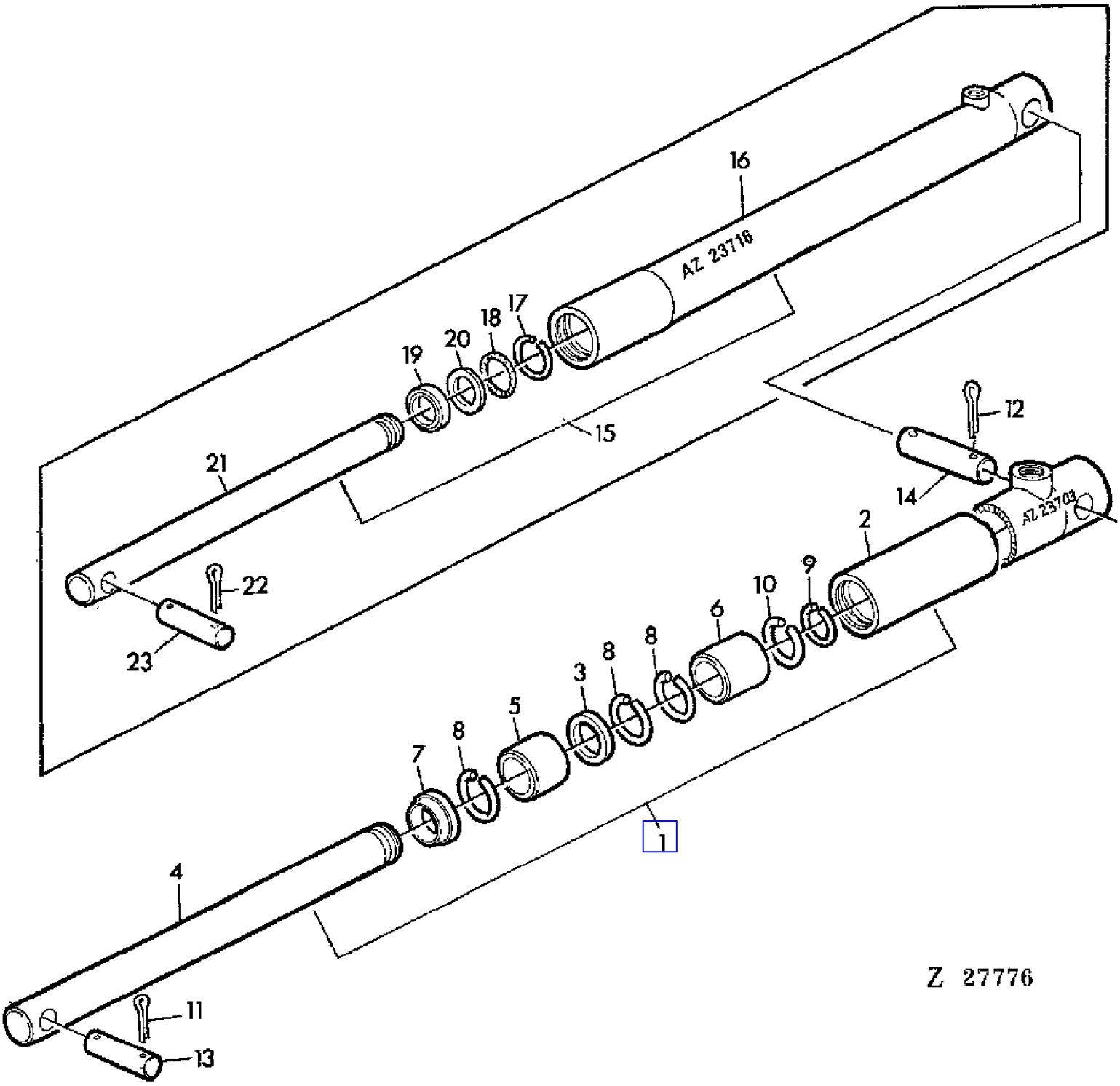

COPYRIGHT©1994 - 2008 DEERE & COMPANY Moline, Illinois All rights reserved

(2B22) PLATFORM LIFT CYLINDER
PLATE-FORME DE COUPE-VERINS
SCHNEIDWERK-HUBZYLINDER
CILINDRI SOLLEVAMENTO PIATTAFORMA
CILINDROS ELEVADORES DE LA PLATAFORMA DE CORTE
SKAERBORDETS LYFTCYLINDRAR

KEY	PART NO.	PART NAME	QTY	SERIAL NO.			955	REMARKS
1	AZ23703	HYDRAULIC CYLINDER	1		-	021686	X	INCL KEYS 2-10 (ORD AZ37512)
2	.....	HYDRAULIC CYLINDER BARREL	1		-	021686	X	NSEP (ORD AZ37512)
3	.....	BACK-UP RING	1		-	021686	X	(ORD AZ37842)
4	.....	ROD	1		-	021686	X	NSEP (ORD AZ37512)
5	Z34002	BUSHING	1		-	021686	X	
6	Z34003	BUSHING	1		-	021686	X	
7	.....	SCRAPER RING	1		-	021686	X	(ORD AZ37842)
8	.....	SNAP RING	3		-	021686	X	(ORD AZ37842)
9	.....	SNAP RING	1		-	021686	X	(ORD AZ37842)
10	.....	SNAP RING	1		-	021686	X	(ORD AZ37842)
11	11M7028	COTTER PIN	2				X	5X35MM
12	11M7038	COTTER PIN	2				X	6X45MM
13	45M7023	PIN	1				X	22X90X82MM
14	44M7006	PIN	1				X	11X125X108MM
15	AZ23716	HYDRAULIC CYLINDER	2	015898	-	016261	X	(ORD AZ37512)
16	.....	HYDRAULIC CYLINDER BARREL	2	015898	-	016261	X	NSEP (ORD AZ37512)
17	.....	SNAP RING	2	015898	-	016261	X	(ORD AZ37841)
18	.....	O-RING	2	015898	-	016261	X	(ORD AZ37841)
19	.....	SEAL	2	015898	-	016261	X	(ORD AZ37841) (SUB FOR Z28065)
20	.....	BACK-UP RING	2	015898	-	016261	X	(ORD AZ37841) (SUB FOR Z28066)
21	.....	ROD	2	015898	-	016261	X	NSEP (ORD AZ37512)
22	11M7027	COTTER PIN	4	015898	-	016261	X	
23	44M6866	PIN	2	015898	-	016261	X	
..	AZ37842	GASKET KIT	1		-	021686	X	KIT, INCL KEYS 3,7-10 (FOR AZ23703)
..	AZ37841	GASKET KIT	1	015898	-	016261	X	KIT, INCL 17-20 (FOR AZ23716)

COPYRIGHT©1994 - 2008 DEERE & COMPANY Moline, Illinois All rights reserved

(2B23) PLATFORM LIFT CYLINDER (44 MM DIAMETER)
PLATE-FORME DE COUPE-VERINS (DIAMETRE 44MM)
SCHNEIDWERK-HUBZYLINDER (44MM DURCHMESSER)
CILINDRI SOLLEVAMENTO PIATTAFORMA (DIA 44MM)
CILINDROS ELEVADORES DE PLATAFORMA DE CORTE (DIA 44 MM)
LYFTCYLINDRAR FOR SKARBORD(DIA 44 MM)

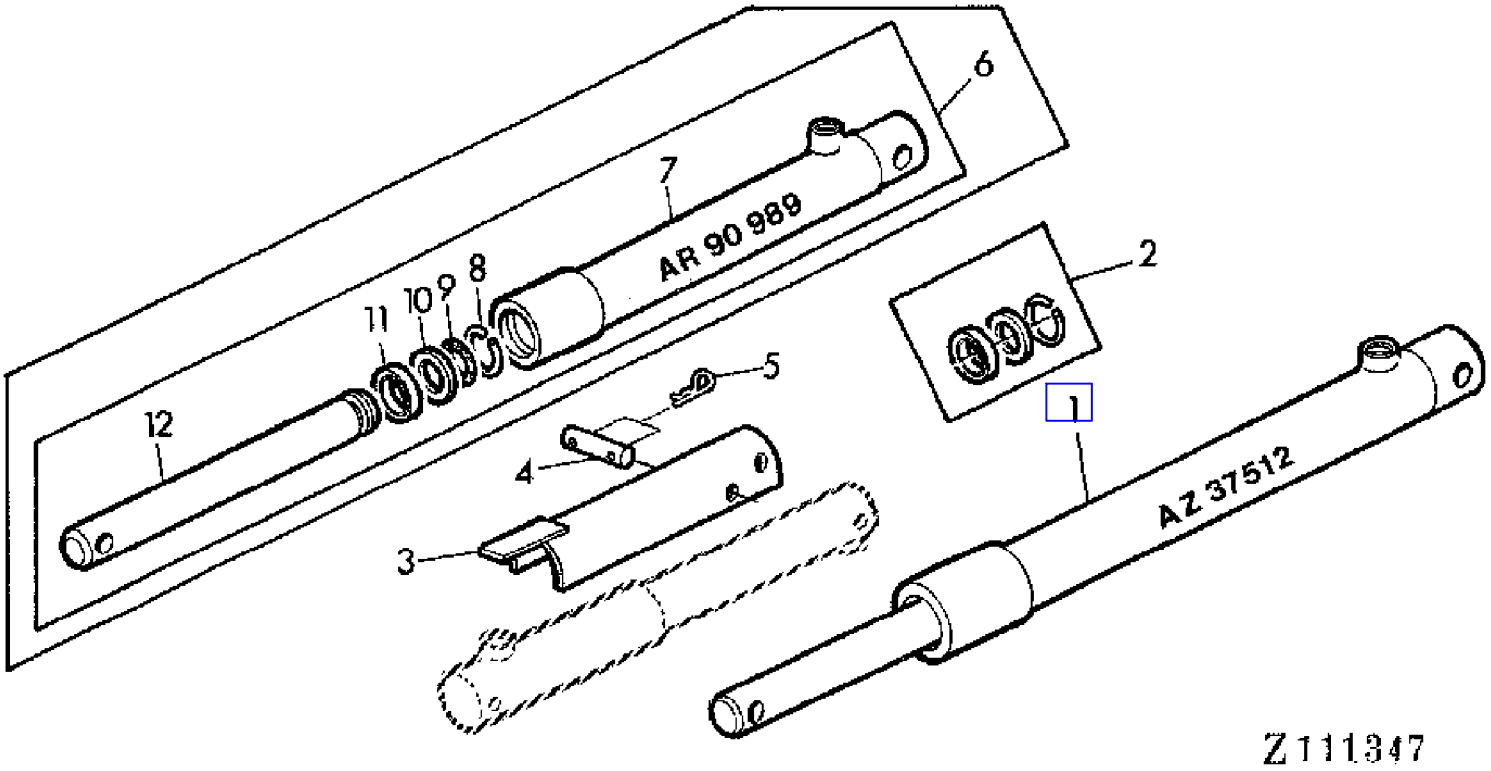

COPYRIGHT©1994 - 2008 DEERE & COMPANY Moline, Illinois All rights reserved

(2B23) PLATFORM LIFT CYLINDER (44 MM DIAMETER)
PLATE-FORME DE COUPE-VERINS (DIAMETRE 44MM)
SCHNEIDWERK-HUBZYLINDER (44MM DURCHMESSER)
CILINDRI SOLLEVAMENTO PIATTAFORMA (DIA 44MM)
CILINDROS ELEVADORES DE PLATAFORMA DE CORTE (DIA 44 MM)
LYFTCYLINDRAR FOR SKARBORD(DIA 44 MM)

KEY	PART NO.	PART NAME	QTY	SERIAL NO.		955	REMARKS
1	AZ37512	HYDRAULIC CYLINDER	2	021687	-	X	(SUB FOR AR90989)
2	AZ37815	SEAL KIT	2	021687	-	X	KIT (FOR AZ37512)
3	AZ22727	GUARD	AR	021687	-	X	
4	Z33788	PIN	AR	021687	-	X	
5	J16931	SPRING LOCKING PIN	AR	021687	-	X	
6	AR90989	HYDRAULIC CYLINDER	2	021687	-	X	(ORD AZ37512)
7	.....	HYDRAULIC CYLINDER BARREL	2	021687	-	X	NSEP (ORD AZ37512)
8	.....	SNAP RING	2	021687	-	X	(ORD AZ37841)
9	.....	O-RING	2	021687	-	X	(ORD AZ37841)
10	.....	BACK-UP RING	2	021687	-	X	(ORD AZ37841)
11	.....	SEAL	2	021687	-	X	(ORD AZ37841)
12	.....	ROD	2	021687	-	X	OD = 44 MM, NSEP (ORD AZ37512)
..	AZ37841	GASKET KIT	2			X	KIT, INCL KEYS 8-11 (FOR AR90989)

COPYRIGHT©1994 - 2008 DEERE & COMPANY Moline, Illinois All rights reserved

(2B24) PLATFORM LIFT CYLINDER (57MM DIAMETER)
PLATE-FORME DE COUPE-VERINS (DIAMETRE 57MM)
SCHNEIDWERK-HUBZYLINDER (57MM DURCHMESSER)
CILINDRI SOLLEVAMENTO PIATTAFORMA (DIA 57MM)
CILINDROS ELEVADORES DE PLATAFORMA DE CORTE (DIA 57MM)
LYFTCYLINDRAR FOR SKARBORD (DIA 57MM)

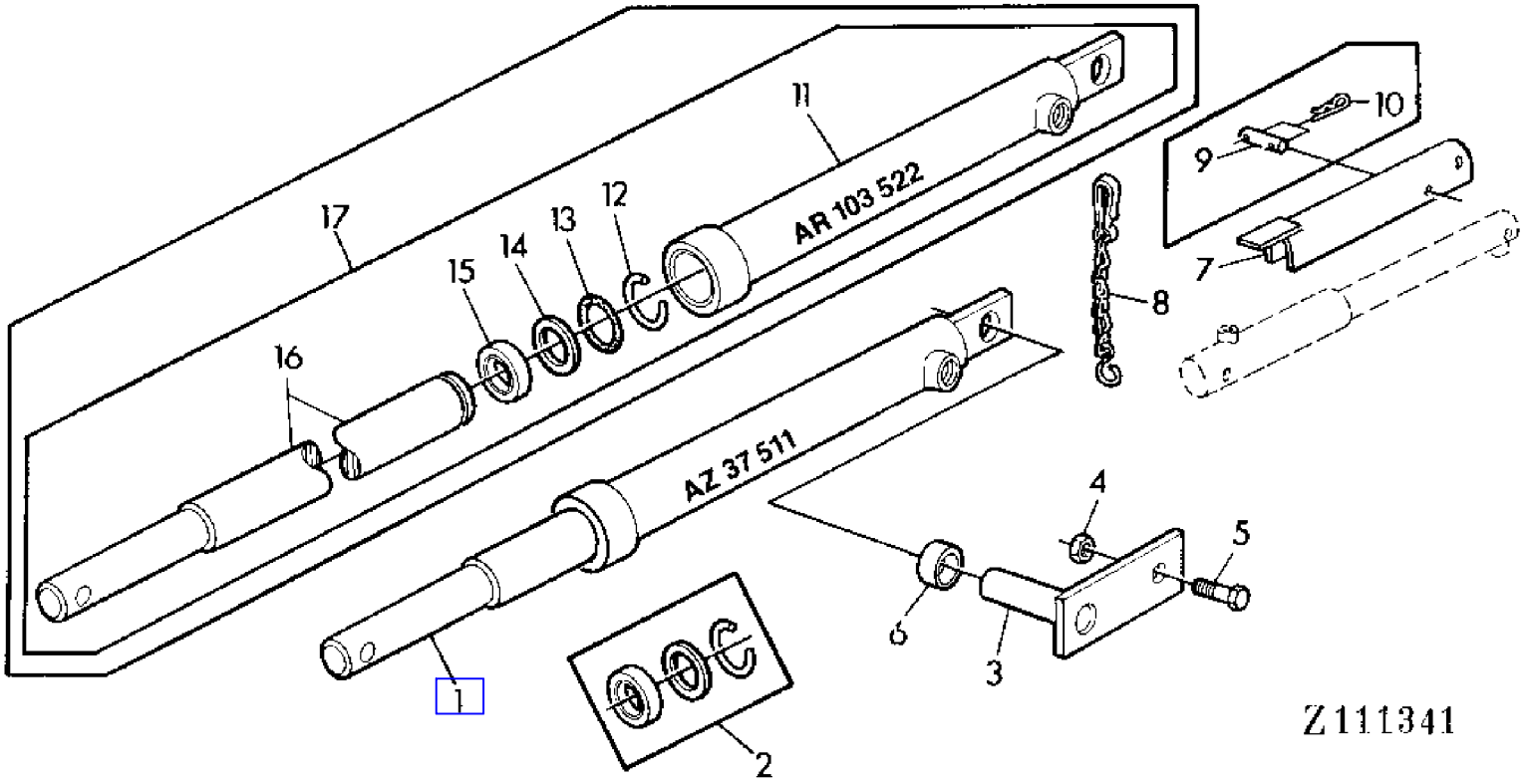

COPYRIGHT©1994 - 2008 DEERE & COMPANY Moline, Illinois All rights reserved

(2B24) PLATFORM LIFT CYLINDER (57MM DIAMETER)
PLATE-FORME DE COUPE-VERINS (DIAMETRE 57MM)
SCHNEIDWERK-HUBZYLINDER (57MM DURCHMESSER)
CILINDRI SOLLEVAMENTO PIATTAFORMA (DIA 57MM)
CILINDROS ELEVADORES DE PLATAFORMA DE CORTE (DIA 57MM)
LYFTCYLINDRAR FOR SKARBORD (DIA 57MM)

KEY	PART NO.	PART NAME	QTY	SERIAL NO.	955	REMARKS
1	AZ37511	HYDRAULIC CYLINDER	2		X	(SUB FOR AR103522)
2	AZ37849	GASKET KIT	2		X	KIT (FOR AZ37511)
3	AZ29898	HOLDER	2		X	
4	14M7167	LOCK NUT	AR		X	M10
5	19M7168	CAP SCREW	2		X	M10X30
6	Z40104	SPACER	4		X	
7	AZ29900	GUARD	AR		X	(ORD W/ AZ35224)
8	AZ35224	LINK CHAIN	AR		X	
9	Z33788	PIN	AR		X	
10	J16931	SPRING LOCKING PIN	AR		X	
11	.....	HYDRAULIC CYLINDER BARREL	1		X	NSEP (ORD AZ37511)
12	.....	SNAP RING	1		X	(ORD AZ37843)
13	.....	O-RING	1		X	(ORD AZ37843) (SUB FOR CD14738)
14	.....	BACK-UP RING	1		X	(ORD AZ37843) (SUB FOR CD14734)
15	.....	SEAL	1		X	(ORD AZ37843)
16	.....	ROD	1		X	OD = 57 MM, NSEP (ORD AZ37511)
17	AR103522	HYDRAULIC CYLINDER	1		X	(ORD AZ37511)
..	AZ37843	GASKET KIT	2		X	KIT, INCL KEYS 12-15 (FOR AR103522)

COPYRIGHT©1994 - 2008 DEERE & COMPANY Moline, Illinois All rights reserved

(1D10) PRECLEANER/AIR CLEANER
PREFILTRE/FILTRE A AIR
VORFILTER/LUFTFILTER
PREFILTRO ARIA/FILTRO ARIA
PREPURIFICADOR/PURIFICADOR DE AIRE
LUFTFORRENARE/LUFTRENARE

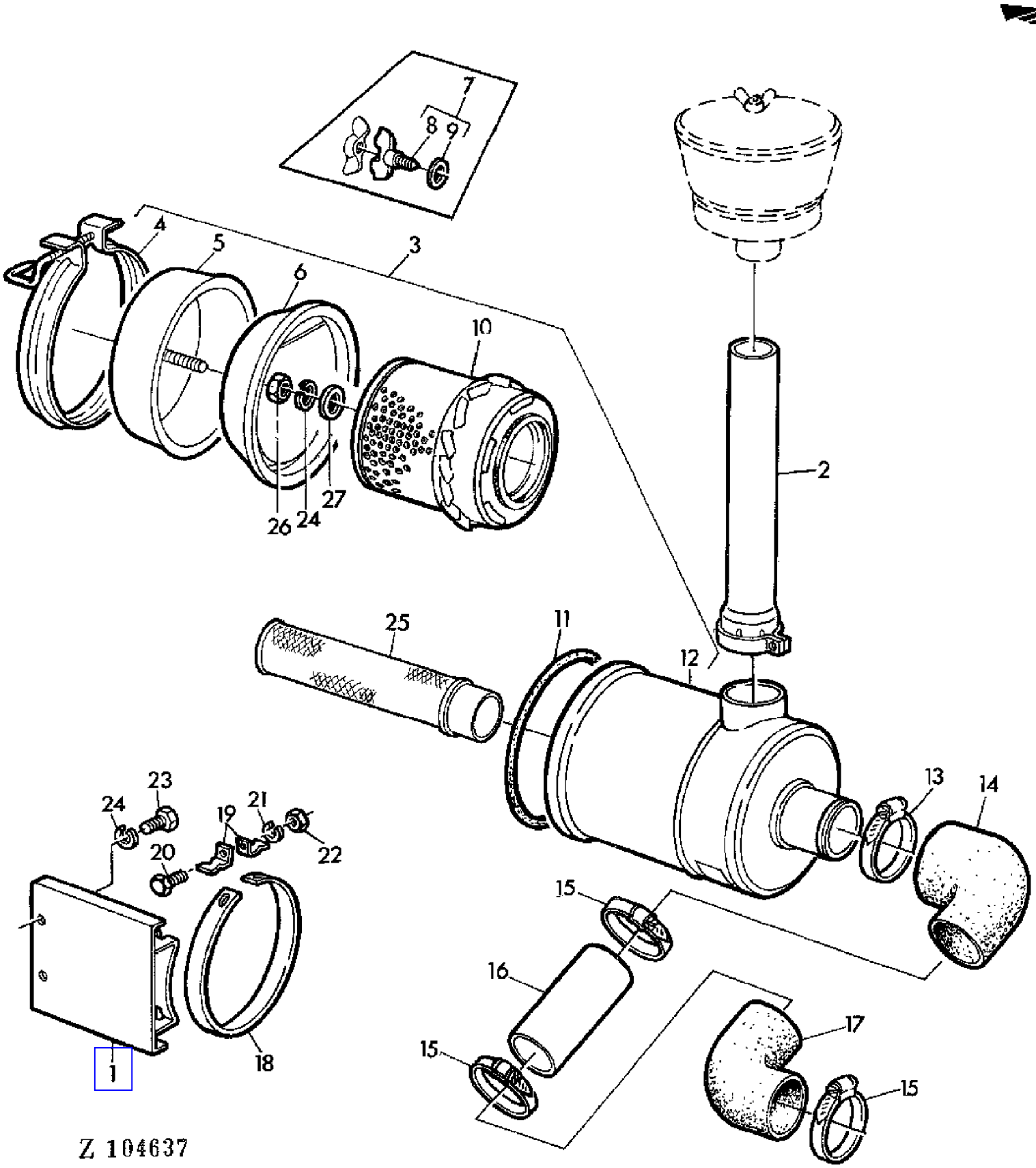

COPYRIGHT©1994 - 2008 DEERE & COMPANY Moline, Illinois All rights reserved

(1D10) PRECLEANER/AIR CLEANER
PREFILTRE/FILTRE A AIR
VORFILTER/LUFTFILTER
PREFILTRO ARIA/FILTRO ARIA
PREPURIFICADOR/PURIFICADOR DE AIRE
LUFTFORRENARE/LUFTRENARE

KEY	PART NO.	PART NAME	QTY	SERIAL NO.			955	REMARKS
1	AZ20096	RETAINER	1		-	014053	X	
	AZ20593	RETAINER	1	014054	-		X	
2	AZ23040	PIPE	1		-	014053	X	(SUB FOR AZ22021)
	AZ21734	PIPE	1	014054	-		X	
3	AH21283	AIR CLEANER	1		-	014053	X	ASSY, INCL KEYS 4-12
	AZ25868	AIR CLEANER	1	014054	-		X	ASSY, INCL KEYS 4-10,12
4	AH21419	CLAMP	1		-	014053	X	
	AR30575	CLAMP	1	014054	-		X	
5	AH21420	CAP	1		-	014053	X	
	AT28098	DUST BOWL	1	014054	-		X	
6	R36698	COVER	1		-	014053	X	
	R39828	ISOLATOR	1	014054	-		X	
7	R36701	WING SCREW	1		-	014053	X	ASSY, INCL KEYS 8,9
	AH20849	WING NUT	1	014054	-	XXXX	X	
8	.....	WING SCREW	1		-	014053	X	NSEP (ORD R36701)
	.....	WING SCREW	1	014054	-		X	NSEP (ORD AH20849)
9	R36699	WASHER	1		-	014053	X	
10	AR36044	AIR CLEANER	1		-	014053	X	INCL KEY 9
	AZ20625	FILTER ELEMENT	1	014054	-		X	
11	H36036	O-RING	1		-	014053	X	
12	.....	HOUSING	1		-	014053	X	NSEP (ORD AH21283)
	.....	HOUSING	1	014054	-		X	NSEP (ORD AZ25868)
13	Z29925	CLAMP	1				X	
14	Z32740	HOSE	1				X	
15	Z30340	CLAMP	3				X	
16	Z32739	HOSE	1				X	
17	Z32741	HOSE	1				X	
18	Z29989	ADJUSTING STRAP	2		-	014053	X	
	Z32087	CLAMP	1	014054	-		X	
19	P50487	CLIP	4				X	
20	19M7547	CAP SCREW	2				X	M6X55
21	12M7012	LOCK WASHER	2				X	6MM
22	14M7027	NUT	2				X	M6
23	19M7163	CAP SCREW	2				X	M8X25
24	12M7008	LOCK WASHER	AR	XXXX	-		X	8MM
25	AZ25867	FILTER ELEMENT	1	014054	-		X	
26	14M7029	NUT	1	XXXX	-		X	M8
27	24M7036	WASHER	1	XXXX	-		X	9MM

COPYRIGHT©1994 - 2008 DEERE & COMPANY Moline, Illinois All rights reserved

(3E02) PRESSURZING FAN-AIR CONDITIONED CAB
SOUFFLANTES DE PRESSURISATION-CABINE CLIMATISEE
GEBLAESE-KABINE MIT KLIMAANLAGE
VENTILATORI DI PRESSURIZZAZIONE-CABINA CONDIZIONATA
VENTILADOR DE PRESURIZACION-CABINA CON AIRE ACOND.
LUFTFLAEKT-HYTT MED LUFTKONDITIONERING

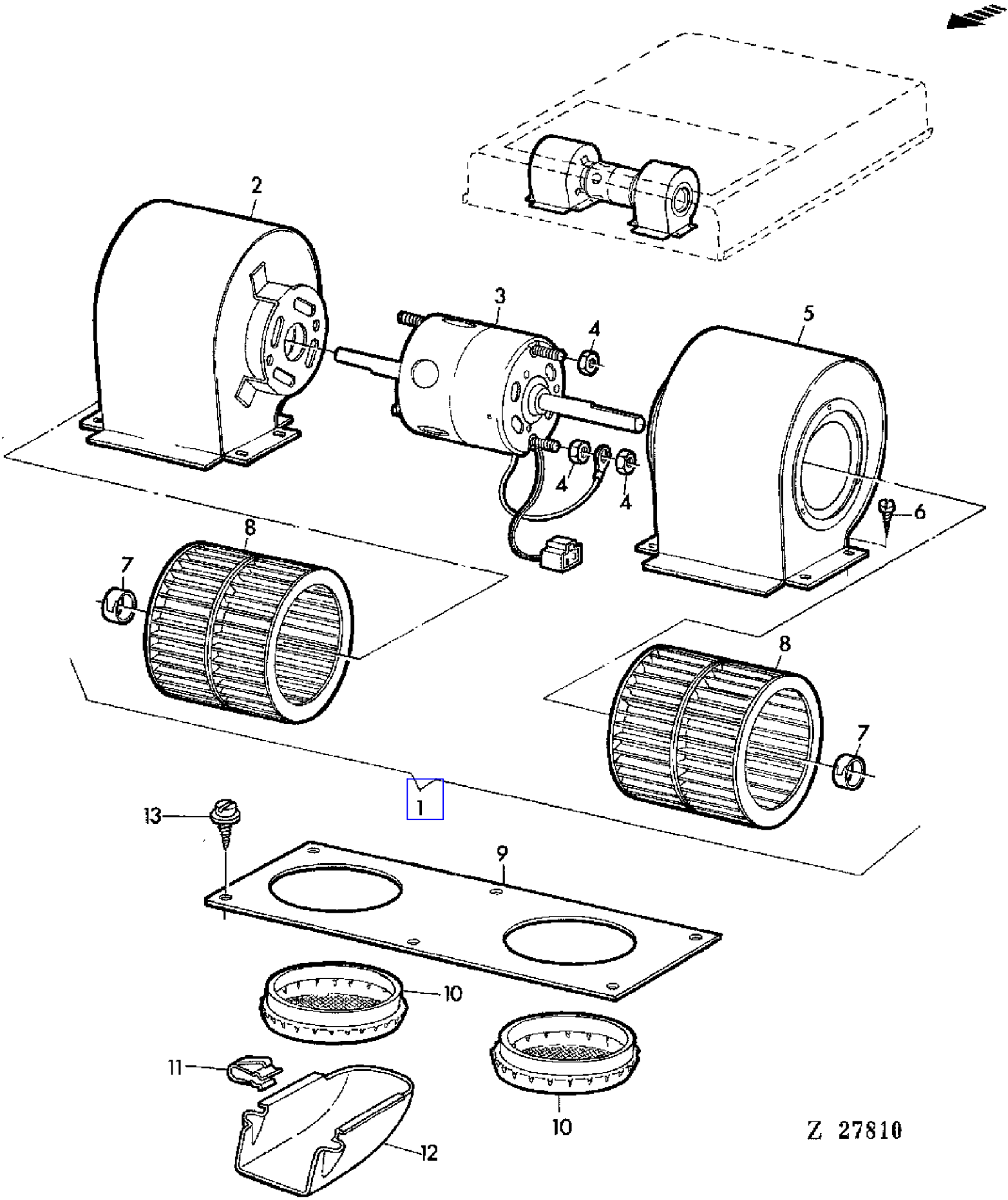

COPYRIGHT©1994 - 2008 DEERE & COMPANY Moline, Illinois All rights reserved

(3E02) PRESSURZING FAN-AIR CONDITIONED CAB
SOUFFLANTES DE PRESSURISATION-CABINE CLIMATISEE
GEBLAESE-KABINE MIT KLIMAANLAGE
VENTILATORI DI PRESSURIZZAZIONE-CABINA CONDIZIONATA
VENTILADOR DE PRESURIZACION-CABINA CON AIRE ACOND.
LUFTFLAEKT-HYTT MED LUFTKONDITIONERING

KEY	PART NO.	PART NAME	QTY	SERIAL NO.	955	REMARKS
1	AH89816	FAN	1		X	
2	AH89813	CASE	1		X	RH
3	AH80194	MOTOR	1		X	
4	14H778	NUT	5		X	0.190"
5	AH89814	CASE	1		X	LH
6	19H1919	CAP SCREW	8		X	1/4"X5/8"
7	H84108	CLIP	2		X	
8	H84107	WHEEL	2		X	
9	H81685	PANEL	1		X	
10	AH80205	LOUVER	2		X	
11	H83282	CLIP	6		X	
12	H83062	DEFLECTOR	2		X	
13	AH87867	SCREW	16		X	1/4"X3/4"

COPYRIGHT©1994 - 2008 DEERE & COMPANY Moline, Illinois All rights reserved

(3F08) QUICK COUPLER
ATTELAGE RAPIDE
SCHNELLVERSCHLUSS
ATTACCO RAPIDO
CIERRE RAPIDO
SNABBLAS

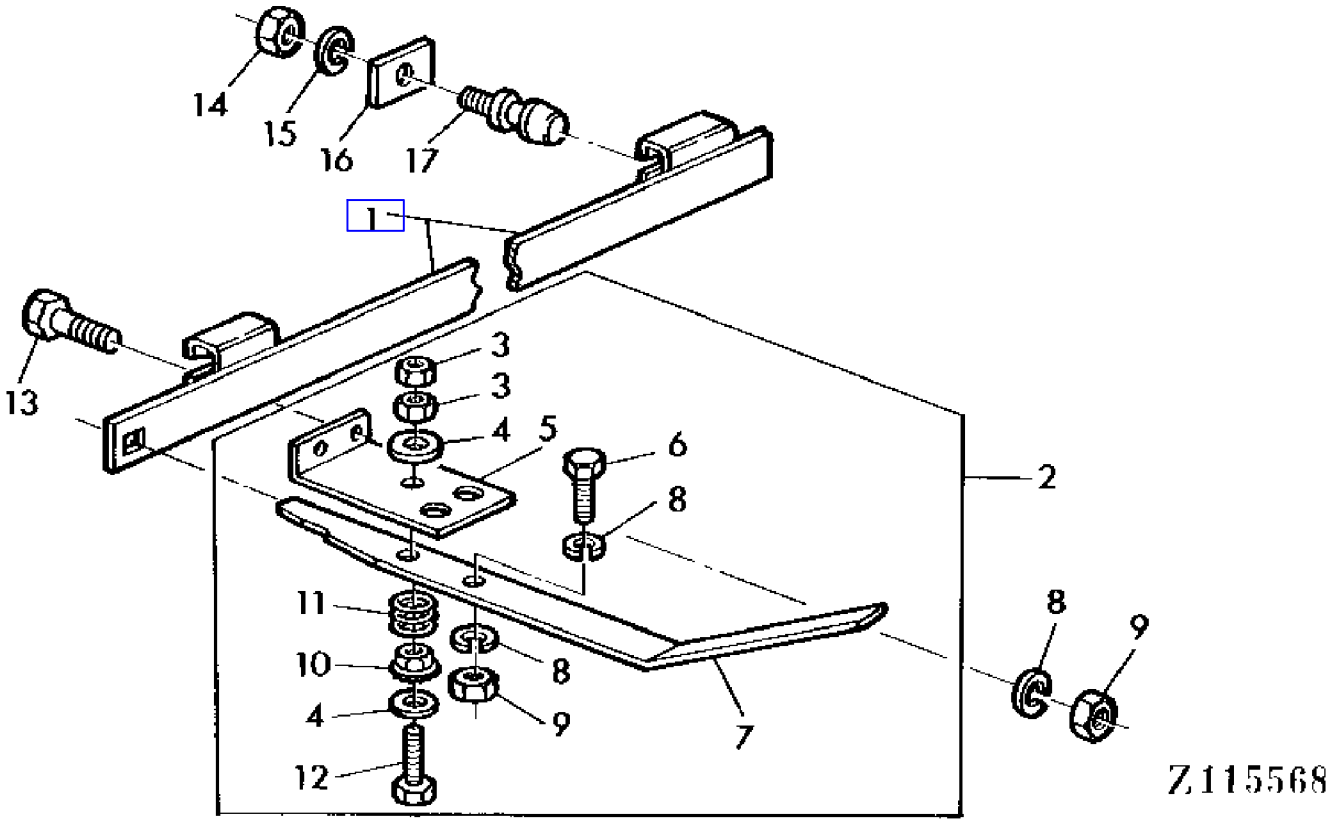

COPYRIGHT©1994 - 2008 DEERE & COMPANY Moline, Illinois All rights reserved

(PC4146) 955 Combine

(3F08) QUICK COUPLER
ATTELAGE RAPIDE
SCHNELLVERSCHLUSS
ATTACCO RAPIDO
CIERRE RAPIDO
SNABBLAS

KEY	PART NO.	PART NAME	QTY	SERIAL NO.		955	REMARKS
1	AZ41044	SUPPORT	1	050928	-	X	
2	AZ41049	LEVER	1	050928	-	X	
3	14M7140	NUT	AR	050928	-	X	M10
4	24M7101	WASHER	AR	050928	-	X	11,5MM
5	.....	RETAINER	1	050928	-	X	NSEP
6	19M7376	CAP SCREW	AR	050928	-	X	M8X22
7	.....	LEVER	1	050928	-	X	NSEP
8	12M7008	LOCK WASHER	AR	050928	-	X	8MM
9	14M7029	NUT	AR	050928	-	X	M8
10	14M7451	FLANGE NUT	1	050928	-	X	M12
11	Z24302	COMPRESSION SPRING	1	050928	-	X	
12	19M7327	CAP SCREW	1	050928	-	X	M10X65
13	19M7139	CAP SCREW	AR	050928	-	X	M8X20
14	14M7142	NUT	AR	050928	-	X	M16
15	12M7017	LOCK WASHER	AR	050928	-	X	16MM
16	Z31858	STRAP	2	050928	-	X	
17	Z31859	PIN	2	050928	-	X	

COPYRIGHT©1994 - 2008 DEERE & COMPANY Moline, Illinois All rights reserved

(3F10) QUICK-COUPLER
ATTACHE RAPIDE
SCHNELLVERSCHLUSS
ATTACCO RAPIDO
CIERRE RAPIDO
SNABBKOPPLING

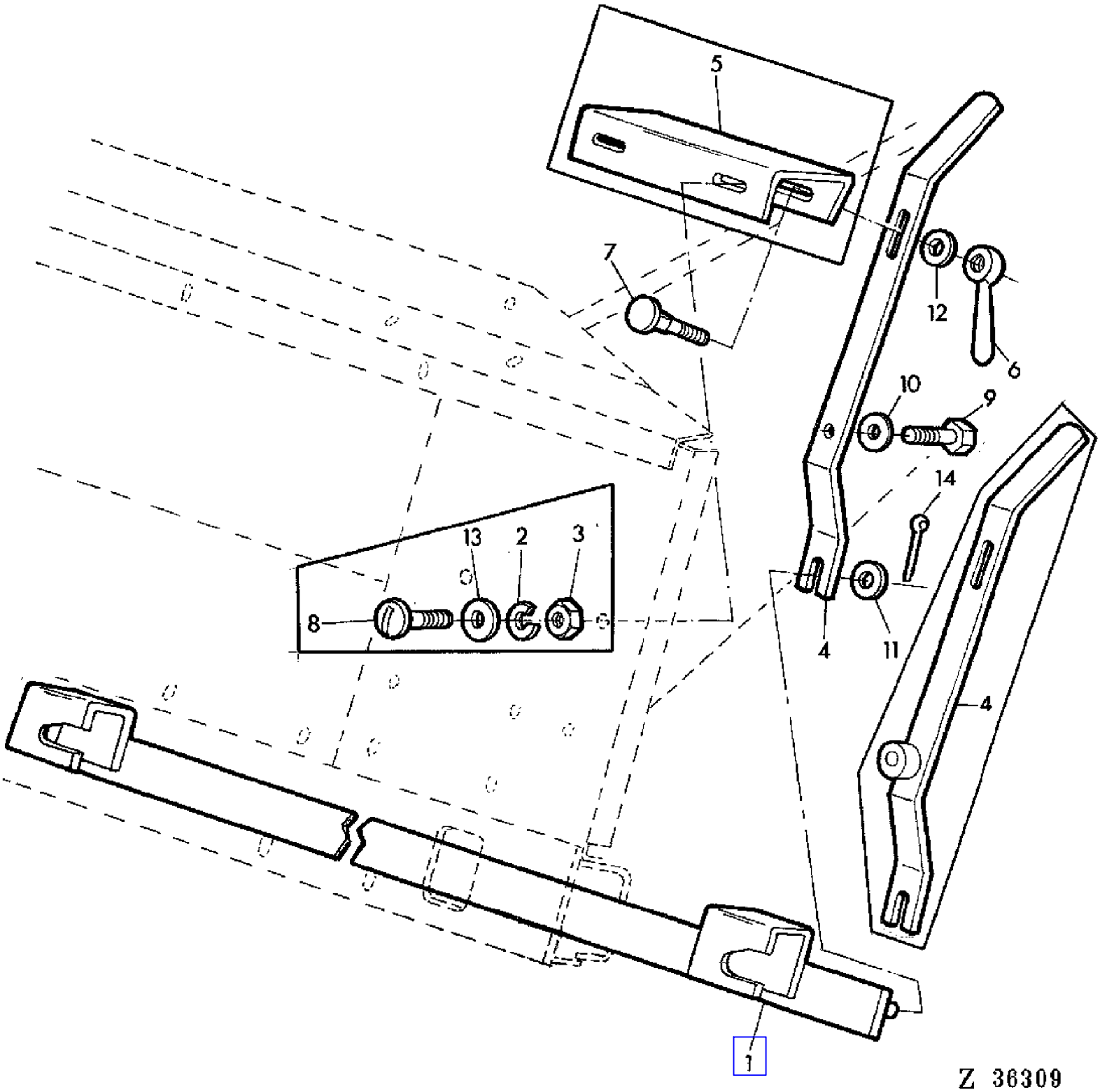

COPYRIGHT©1994 - 2008 DEERE & COMPANY Moline, Illinois All rights reserved

(PC4146) 955 Combine

(3F10) QUICK-COUPLER
ATTACHE RAPIDE
SCHNELLVERSCHLUSS
ATTACCO RAPIDO
CIERRE RAPIDO
SNABBKOPPLING

KEY	PART NO.	PART NAME	QTY	SERIAL NO.			955	REMARKS
1	AZ20527	RAIL	1		-	050927	X	(ORD AZ41044, AZ41049)
2	12M7008	LOCK WASHER	2		-	024617	X	8MM
3	14M7029	NUT	2		-	024617	X	M8
4	AZ20528	LEVER	1		-	024617	X	(ORD AZ41044, AZ41049)
	Z37726	LEVER	1	024618	-	050927	X	(ORD AZ41044, AZ41049)
5	Z31864	CHANNEL	1		-	024617	X	
6	14M7025	WING NUT	1		-	050927	X	M10 (SUB FOR Z22758)
7	03M7097	BOLT	1		-	050927	X	M10X30
8	21M7089	SCREW	2		-	024617	X	M8X20
9	19M7158	CAP SCREW	1		-	050927	X	M12X45
10	24M7047	WASHER	2		-	050927	X	13MM
11	24M7028	WASHER	1		-	050927	X	10,5MM
12	24M7040	WASHER	1		-	050927	X	11MM
13	24M7055	WASHER	1		-	024617	X	8,4MM
14	11M7012	COTTER PIN	1		-	050927	X	3X18MM

COPYRIGHT©1994 - 2008 DEERE & COMPANY Moline, Illinois All rights reserved

(PC4146) 955 Combine

(1C06) RADIATOR
RADIATEUR
KUEHLER
RADIATORE
RADIADOR
KYLARE

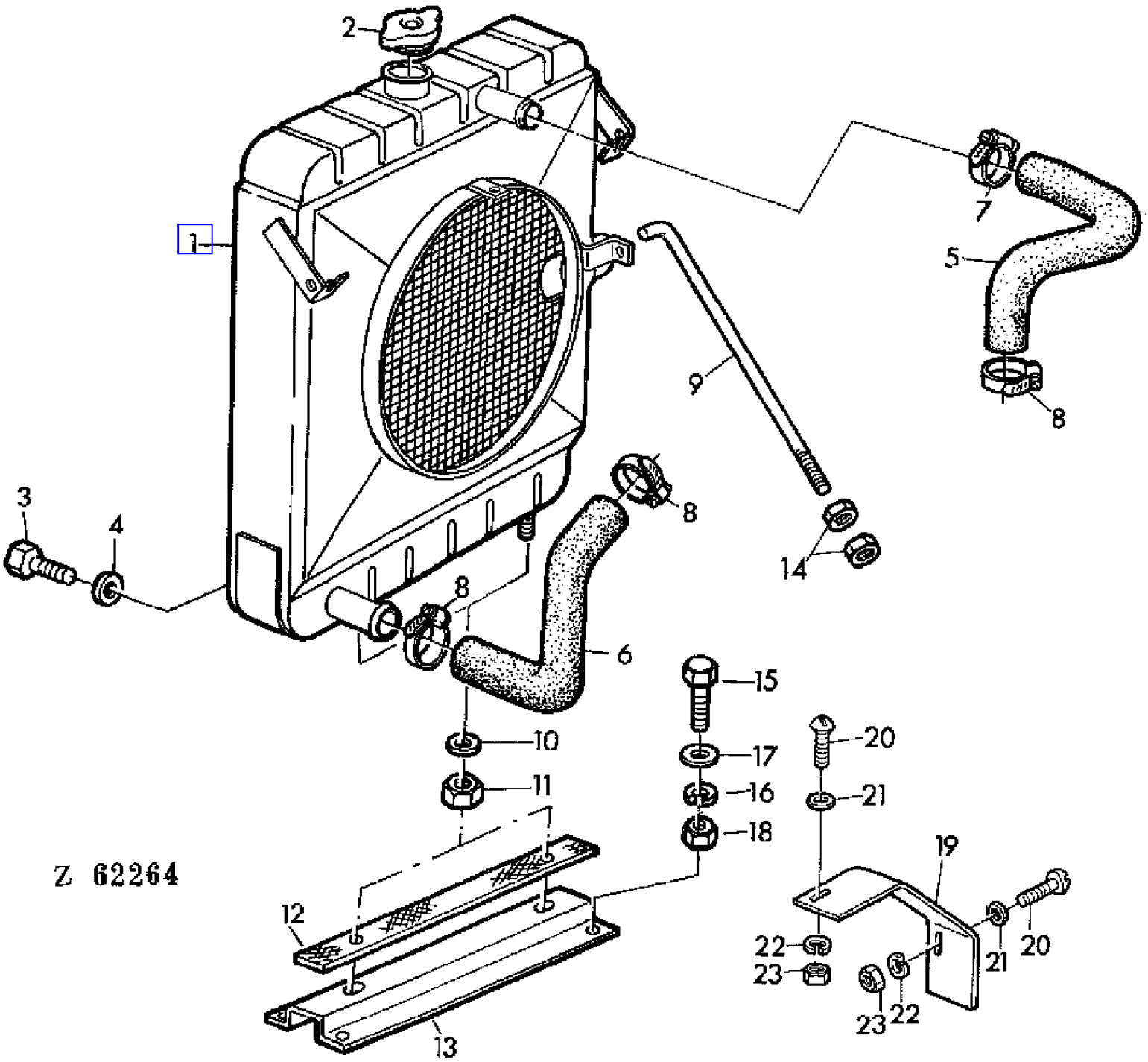

COPYRIGHT©1994 - 2008 DEERE & COMPANY Moline, Illinois All rights reserved

(PC4146) 955 Combine

(1C06) RADIATOR
RADIATEUR
KUEHLER
RADIATORE
RADIADOR
KYLARE

KEY	PART NO.	PART NAME	QTY	SERIAL NO.	955	REMARKS
1	AZ33898	RADIATOR	1		X	INCL KEYS 2,3,4 (SUB FOR AZ21858)
2	Z29121	FILLER CAP	1		X	
3	15M7020	DRAIN PLUG	1		X	14X1,5MM
4	51M4269	RING	1		X	14X18MM
5	Z35156	HOSE	1		X	UP
6	Z32540	HOSE	1		X	LOW
7	Z21160	CLAMP	1		X	
8	Z21162	CLAMP	3		X	
9	Z26805	HOOK BOLT	2		X	
10	24M7038	WASHER	2		X	14MM
11	14M7169	LOCK NUT	2		X	M14
12	Z31661	LINING	1		X	
13	Z23921	SUPPORT	1		X	
14	14M7140	NUT	4		X	M10
15	19M7139	CAP SCREW	4		X	M8X20
16	12M7008	LOCK WASHER	4		X	8MM
17	24M7036	WASHER	4		X	9MM
18	14M7029	NUT	4		X	M8
19	Z35111	GUARD	1		X	
20	21M7087	SCREW	2		X	M6X12
21	24M7088	WASHER	2		X	6,6MM
22	12M7012	LOCK WASHER	2		X	6MM
23	14M7027	NUT	2		X	M6

COPYRIGHT©1994 - 2008 DEERE & COMPANY Moline, Illinois All rights reserved

(PC4146) 955 Combine

(4A19) RASP BAR CYLINDER
BATTEUR
DRESCHTROMMEL
BATTITORE
CILINDRO DESGRANADOR
TROSKCYLINDER

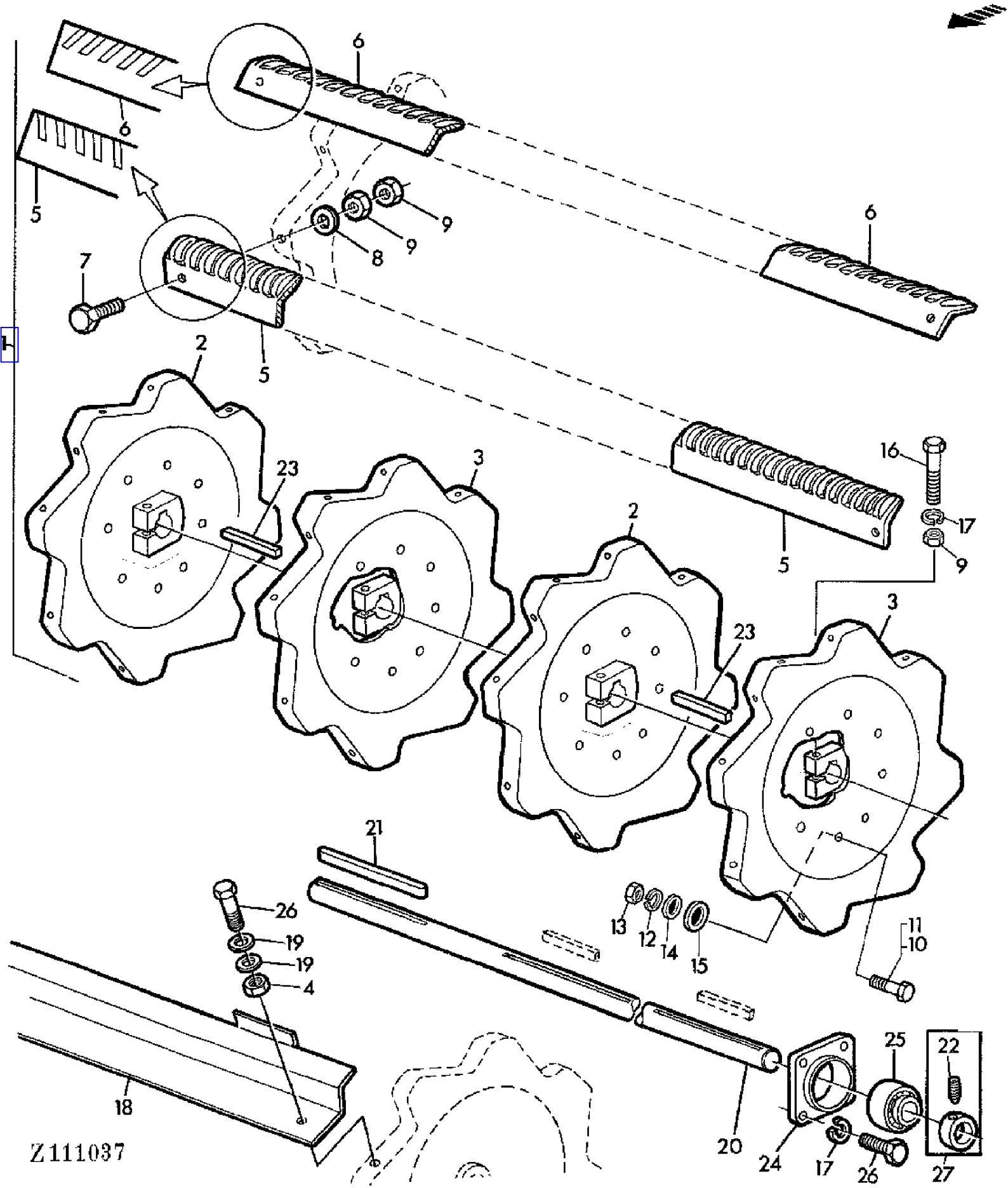

COPYRIGHT©1994 - 2008 DEERE & COMPANY Moline, Illinois All rights reserved

(PC4146) 955 Combine

(4A19) RASP BAR CYLINDER
BATTEUR
DRESCHTROMMEL
BATTITORE
CILINDRO DESGRANADOR
TROSKCYLINDER

KEY	PART NO.	PART NAME	QTY	SERIAL NO.	955	REMARKS
1	AZ24990	RASP-BAR CYLINDER	1		X	ASSY (SUB FOR AZ19853)
2	AZ36269	THRESHING CYL HEAD (W/HUB)	2		X	(ORD W/ 12M7014, 14M7031, 19M7349) (SUB FOR AZ19436, AZ24888, Z20001, Z35899)
3	AZ24887	THRESHING CYL HEAD (W/HUB)	2		X	(SUB FOR AZ19435)
4	14M7168	LOCK NUT	AR		X	M12
5	AZ10690	RASP BAR	2		X	RH, PACKG (2)
6	AZ10691	RASP BAR	2		X	LH, PACKG (2)
7	19M7171	CAP SCREW	AR		X	M12X35
8	24M7111	WASHER	AR		X	13MM
9	14M7031	NUT	AR		X	M12
10	19M7169	CAP SCREW	2		X	M10X35
11	19M7168	CAP SCREW	AR		X	M10X30
12	12M7013	LOCK WASHER	3		X	10MM
13	14M7140	NUT	3		X	M10
14	24M7101	WASHER	AR		X	11,5MM
15	E10079	WASHER	AR		X	
16	19M7349	CAP SCREW	4		X	M12X95
17	12M7014	LOCK WASHER	AR		X	12MM
18	AZ34123	SHIELD	4		X	PACKG (2) (SUB FOR AZ20666)
19	24M7047	WASHER	AR		X	13MM
20	Z41212	SHAFT	1		X	(SUB FOR Z30813)
21	49M7031	SHAFT KEY	1		X	12X8X280MM
22	AZ19845	SET SCREW	1		X	10X10MM, KIT
23	49M7016	SHAFT KEY	2		X	12X8X80MM
24	Z11331	HOUSING	2		X	(SUB FOR Z10745, Z11118)
25	AZ19432	BALL BEARING	2		X	
26	19M7285	CAP SCREW	AR		X	M12X30
27	AZ35559	ECCENTRIC LOCKING COLLAR	2		X	

COPYRIGHT©1994 - 2008 DEERE & COMPANY Moline, Illinois All rights reserved

(2E15) REAR AXLE SUPPORT BRACKET
SUPPORT D'ESSIEU ARRIERE
HINTERACHSKONSOLE
SUPPORTO DEL ASSALE POSTERIORE
ARMAZON DEL EJE TRASERO
BAKAXELFAESTE

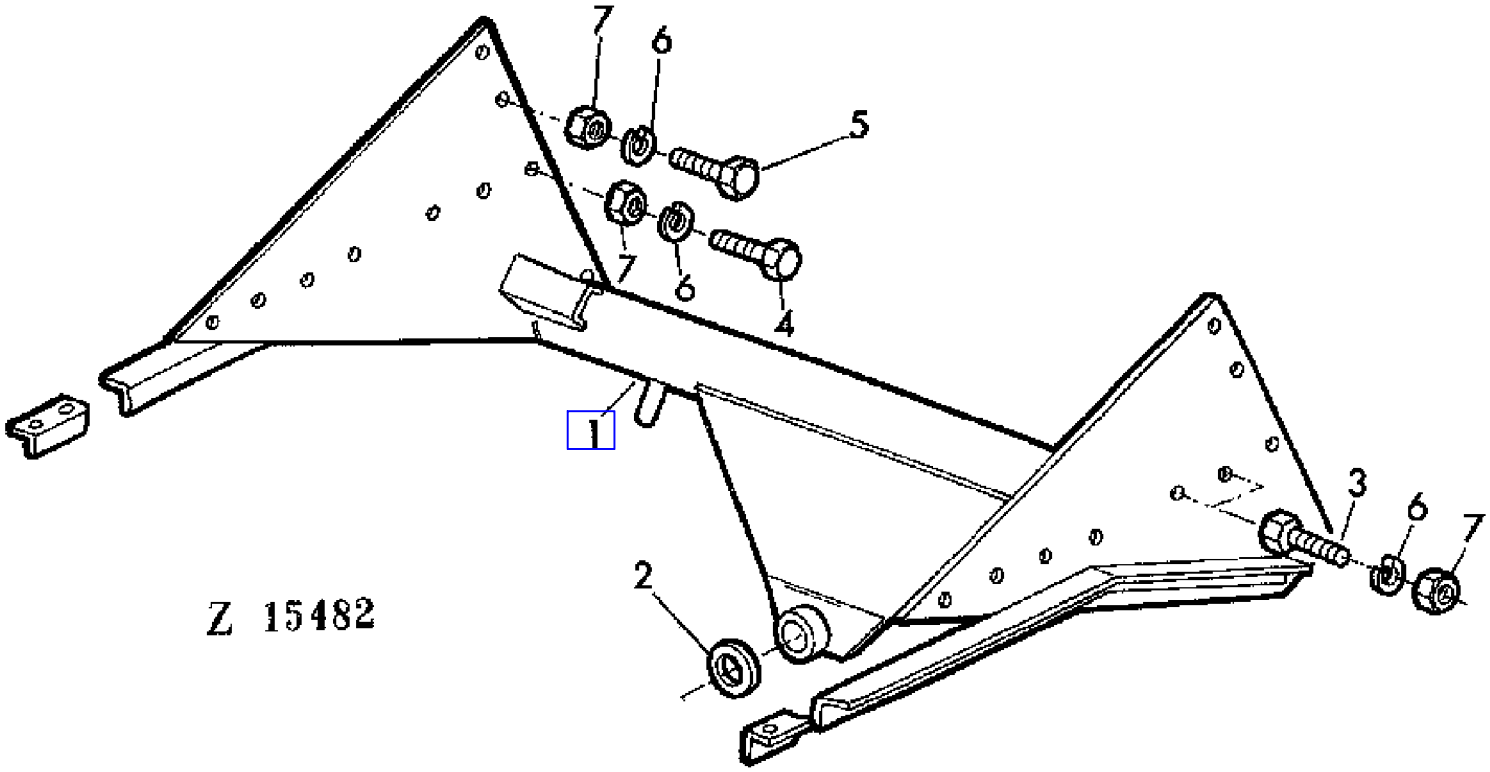

COPYRIGHT©1994 - 2008 DEERE & COMPANY Moline, Illinois All rights reserved

(2E15) REAR AXLE SUPPORT BRACKET
SUPPORT D'ESSIEU ARRIERE
HINTERACHSKONSOLE
SUPPORTO DEL ASSALE POSTERIORE
ARMAZON DEL EJE TRASERO
BAKAXELFAESTE

KEY	PART NO.	PART NAME	QTY	SERIAL NO.	955	REMARKS
1	AZ27089	REAR AXLE SUPPORT	1		X	(SUB FOR AZ20477)
2	L19162	SHIM	AR		X	
3	19M7155	CAP SCREW	AR		X	M10X35
4	19M7168	CAP SCREW	AR		X	M10X30
5	19M7381	CAP SCREW	AR		X	M10X28
6	12M7013	LOCK WASHER	AR		X	10MM
7	14M7140	NUT	AR		X	M10

COPYRIGHT©1994 - 2008 DEERE & COMPANY Moline, Illinois All rights reserved

(2F24) REAR ENGINE PANEL
PANNEAU ARRIERE MOTEUR
HINTERE MOTORVERKLEIDUNG
RIVESTIMENTO POSTERIORE DEL MOTORE
PANEL TRASERO DEL MOTOR
BAKRE MOTORSKYDD

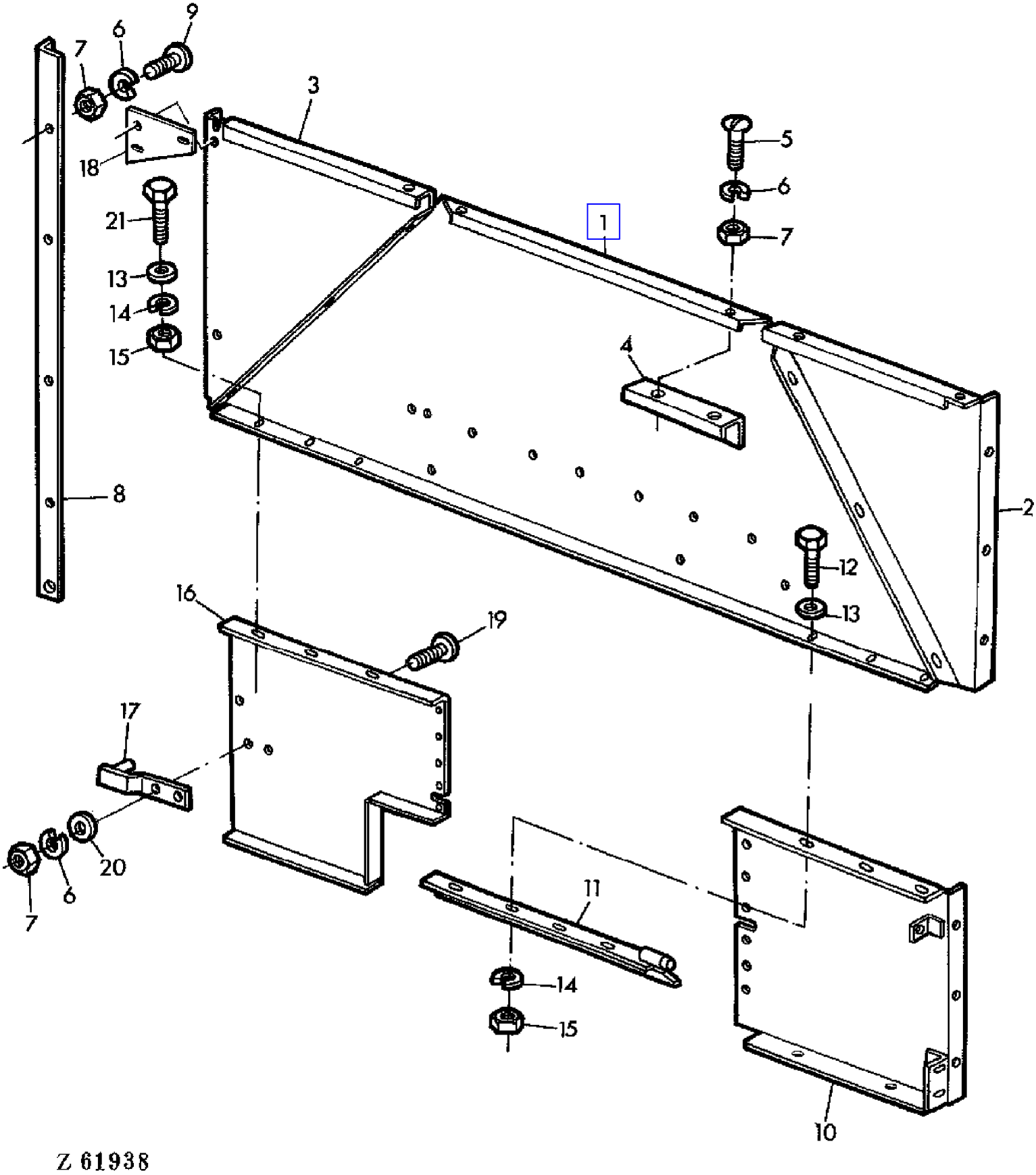

COPYRIGHT©1994 - 2008 DEERE & COMPANY Moline, Illinois All rights reserved

(2F24) REAR ENGINE PANEL
PANNEAU ARRIERE MOTEUR
HINTERE MOTORVERKLEIDUNG
RIVESTIMENTO POSTERIORE DEL MOTORE
PANEL TRASERO DEL MOTOR
BAKRE MOTORSKYDD

KEY	PART NO.	PART NAME	QTY	SERIAL NO.	955	REMARKS
1	Z31134	SHIELD	1		X	
2	Z31445	SHIELD	1		X	
3	Z31446	SHIELD	1		X	
4	Z31120	FITTING	2		X	
5	21M7083	SCREW	10		X	M6X10
6	12M7012	LOCK WASHER	17		X	6MM
7	14M7027	NUT	17		X	M6
8	Z32321	ANGLE	1		X	
9	21M7087	SCREW	5		X	M6X12
10	AZ19772	SHIELD	1		X	
	AZ28773	PANEL	1		X	(A)
11	AZ19774	SUPPORT	1		X	
12	19M7139	CAP SCREW	3		X	M8X20
13	24M7036	WASHER	9		X	9,5MM
14	12M7008	LOCK WASHER	6		X	8MM
15	14M7029	NUT	6		X	M8
16	Z31135	SHIELD	1		X	
17	AZ20257	HOLDER	1		X	
18	Z32320	REINFORCEMENT	1		X	
19	21M7085	SCREW	2		X	M6X20
20	Z26250	WASHER	1		X	6,5MM
21	19M7162	CAP SCREW	3		X	M8X15

(A) WITH STRAW COLLECTOR ONLY
AVEC RECUPERATEUR DE PAILLE UNIQUEMENT
NUR BEI STROHSAMMLER
SOLO CON RACCOGLITORE DI PAGLIA
SOLO CON RECOGEDOR DE PAJA
ENDAST VID HALMSAMLARE

COPYRIGHT©1994 - 2008 DEERE & COMPANY Moline, Illinois All rights reserved

(3C08) REAR PANEL(OPERATOR'S CAB)
PANNEAU ARRIERE CABINE
RUECKWAND (FAHRERHAUS)
PANNELLO POSTERIORE(CABINA)
PANEL POSTERIOR DE LA CABINA
BAKRE KONTROLLPANEL(FOERARHYTT)

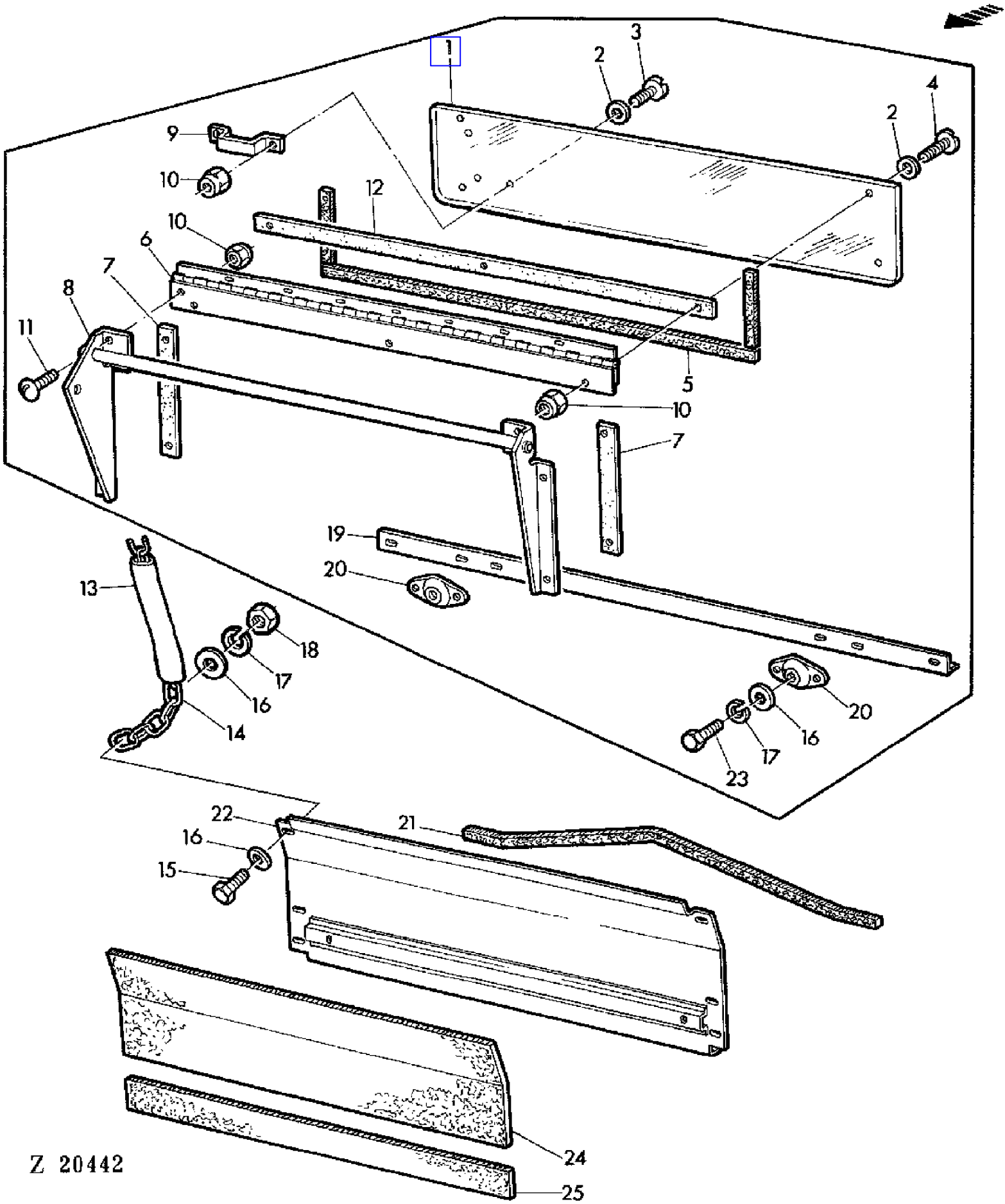

COPYRIGHT©1994 - 2008 DEERE & COMPANY Moline, Illinois All rights reserved

(3C08) REAR PANEL(OPERATOR'S CAB)
PANNEAU ARRIERE CABINE
RUECKWAND (FAHRERHAUS)
PANNELLO POSTERIORE(CABINA)
PANEL POSTERIOR DE LA CABINA
BAKRE KONTROLLPANEL(FOERARHYTT)

KEY	PART NO.	PART NAME	QTY	CAB SERIAL NO.			955	REMARKS
1	CA20314	WINDOW	1		-	K13162	X	(SUB FOR CA19440)
2	CA19649	WASHER	10		-	K13162	X	
3	CA19605	BOLT	7		-	K13162	X	
4	CA19604	BOLT	3		-	K13162	X	
5	CA19989	WEATHERSTRIP	1		-	K13162	X	LGTH = 1850 MM
6	DA19390	HINGE	1		-	K13162	X	
7	CA19647	WEATHERSTRIP	2		-	K13162	X	
8	DA19817	HOLDER	1		-	K13162	X	
9	DA19603	GRIP	1		-	K13162	X	
10	14M7165	LOCK NUT	12		-	K13162	X	M6
11	21M7031	SCREW	2		-	K13162	X	M6X15
12	CA19648	WEATHERSTRIP	1				X	
13	CA22363	GUARD	1				X	(SUB FOR CA19675)
14	CA22364	LINK CHAIN	1				X	(SUB FOR CA19668)
15	19M7167	CAP SCREW	12				X	M10X25
16	24M7040	WASHER	14				X	11MM
17	12M7013	LOCK WASHER	14				X	10MM
18	14M7140	NUT	12				X	M10
19	CA19592	ANGLE	1		-	K13162	X	
20	DA19469	STOP	2		-	K13162	X	
21	CA19500	WEATHERSTRIP	1				X	LGTH = 1360 MM 30X30MM
22	DA19665	SHEET	1		-	K13162	X	
	DA22483	SHEET	1	K13172	-		X	
23	19M7183	CAP SCREW	2		-	K13162	X	M10X40
24	CA19600	BARRIER	1		-	K13162	X	
	CA22756	BARRIER	1	K13172	-		X	
25	CA19718	BARRIER	1				X	

COPYRIGHT©1994 - 2008 DEERE & COMPANY Moline, Illinois All rights reserved

(2F06) REAR SIDE PANELS WITH LADDER
PAROIS ARRIERE ET ECHELLE
HINTERE SEITENWAENDE MIT LEITER
PANNELLI LATERALI POSTERIORI E SCALETTA
PANELES LATERALES TRASEROS CON ESCALERA
BAKRE SIDOPANELER MET STEGE

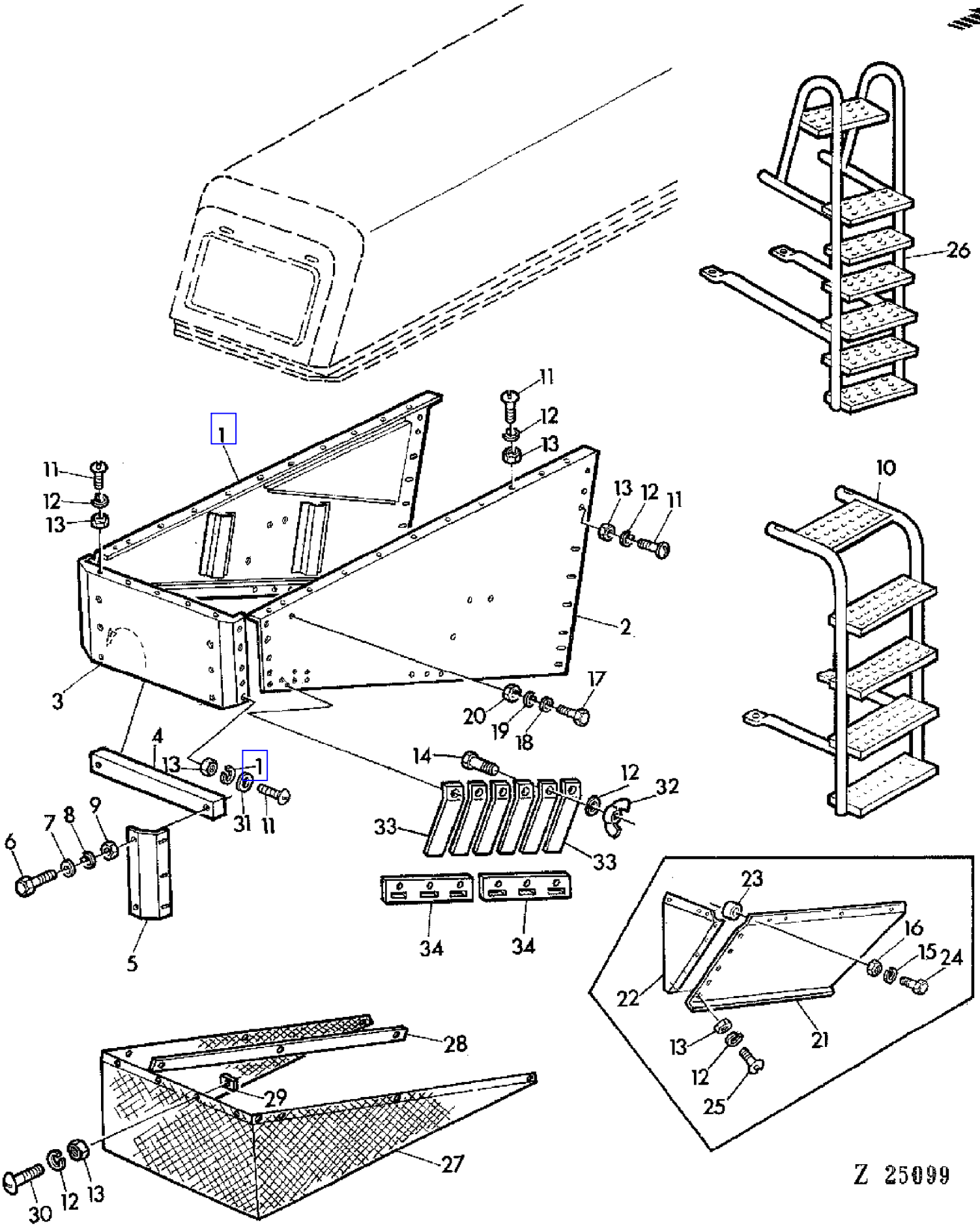

COPYRIGHT©1994 - 2008 DEERE & COMPANY Moline, Illinois All rights reserved

(2F06) REAR SIDE PANELS WITH LADDER
PAROIS ARRIERE ET ECHELLE
HINTERE SEITENWAENDE MIT LEITER
PANNELLI LATERALI POSTERIORI E SCALETTA
PANELES LATERALES TRASEROS CON ESCALERA
BAKRE SIDOPANELER MET STEGE

KEY	PART NO.	PART NAME	QTY	SERIAL NO.	955	REMARKS
1	AZ26925	SIDE WALL	1		X	(SUB FOR AZ23412)
2	AZ26924	SIDE WALL	1		X	(SUB FOR AZ23411)
3	AZ22725	PANEL	1		X	
4	Z32407	WEIGHT	AR		X	
5	Z33776	SHEET	2		X	
6	19M7494	CAP SCREW	AR		X	M12X70
7	24M7102	WASHER	AR		X	14MM
8	12M7014	LOCK WASHER	AR		X	12MM
9	14M7031	NUT	AR		X	M12
10	AZ20225	LADDER	1		X	
11	21M7031	SCREW	36		X	M6X15
12	12M7012	LOCK WASHER	52		X	6MM
13	14M7027	NUT	52		X	M6
14	19M7286	CAP SCREW	6		X	M6X25
15	12M7013	LOCK WASHER	16		X	10MM
16	14M7140	NUT	16		X	M10
17	19M7139	CAP SCREW	18		X	M8X20
18	24M7036	WASHER	18		X	9MM
19	12M7008	LOCK WASHER	18		X	8MM
20	14M7029	NUT	18		X	M8
21	AZ22704	SHEET	1	- 016667	X	
22	Z33734	SHEET	1	- 016667	X	
23	Z29770	SPACER	4	- 016667	X	
24	19M7180	CAP SCREW	4		X	M10X45
25	21M7087	SCREW	5		X	M6X12
26	AZ21765	LADDER	1		X	
27	Z33711	LIMIT CURTAIN	1		X	
28	Z33083	REINFORCEMENT	10		X	
29	Z33085	PLATE	16		X	
30	21M7085	SCREW	16		X	M6X20
31	24M7088	WASHER	8		X	6,6MM
32	14M6662	WING NUT	6		X	M6
33	Z37699	ANGLE	6	016668 -	X	
34	Z37698	HOLDER	2	016668 -	X	

COPYRIGHT©1994 - 2008 DEERE & COMPANY Moline, Illinois All rights reserved

(1I04) REAR WHEELS WITH HUB
ROUES ARRIERE ET MOYEU
HINTERRAEDER MIT NABEN
RUOTE POSTERIORI CON MOZZO
RUEDAS TRASERAS CON CUBOS
BAKHJUL MED NAV

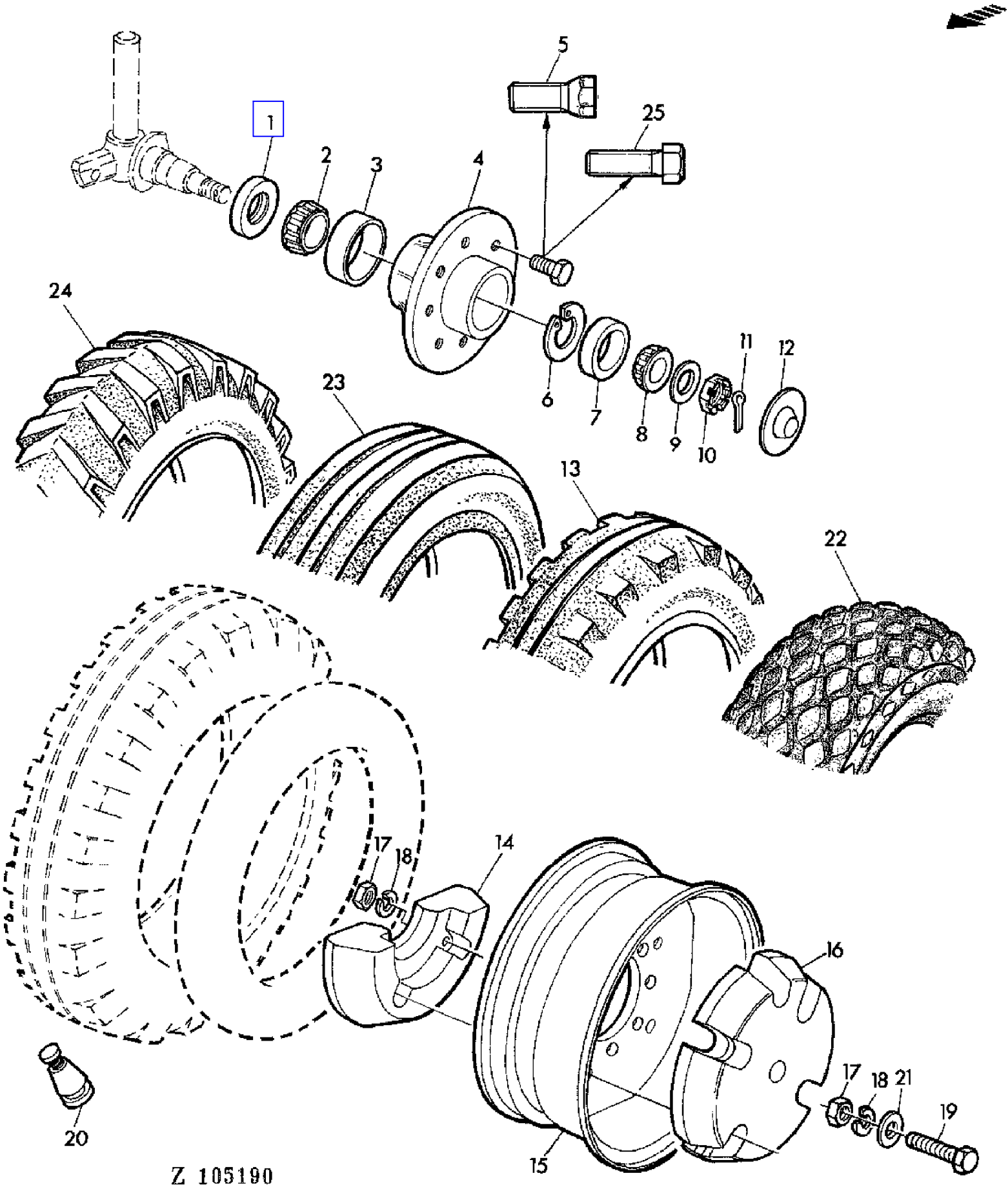

COPYRIGHT©1994 - 2008 DEERE & COMPANY Moline, Illinois All rights reserved

(1I04) REAR WHEELS WITH HUB
ROUES ARRIERE ET MOYEU
HINTERRAEDER MIT NABEN
RUOTE POSTERIORI CON MOZZO
RUEDAS TRASERAS CON CUBOS
BAKHJUL MED NAV

KEY	PART NO.	PART NAME	QTY	SERIAL NO.	955	REMARKS
1	AZ12020	SEAL	2		X	
2	JD8174	BEARING CONE	2		X	
3	JD8219	BEARING CUP	2		X	
4	Z10852	HUB	2		X	
5	H20336	WHEEL BOLT	16	- 033958	X	
6	40M1868	SNAP RING	2		X	(SUB FOR Z21641)
7	JD7449	BEARING CUP	2		X	
8	JD8150	BEARING CONE	2		X	
9	Z21950	WASHER	2		X	
10	14M7180	NUT	2		X	M22X1,5
11	11M7024	COTTER PIN	2		X	4X40MM
12	BP13226	CAP	2		X	
13	.....	TIRE	2		X	7,50-16 6PR
	.....	TIRE	2		X	7,50-20 6PR
	.....	TIRE	2		X	10,5-18 6PR
	.....	TIRE	2		X	11,00-16 8PR
14	Z10861	WEIGHT	AR		X	
15	AZ21608	RIM	2	- 033958	X	5,50 FX16 (ORD AZ31675 W/ (8) 19H3546)
	AZ21611	RIM	2	- 033958	X	5,50 FX20 (ORD AZ31788 W/ (8) 19H3546)
	AZ25692	RIM	2	- 033958	X	8X16 (ORD AZ31675 W/ (8) 19H3546)
	AZ17385	RIM	2	- 033958	X	(A) 9X18 (ORD AZ31527 W/ (8) 19H3546)
	AZ17384	RIM	2	- 033958	X	(A) 9X24 (ORD AZ32667 W/ (8) 19H3546)
	AZ31675	RIM	2	033959 -	X	5,50 FX16
	AZ31788	RIM	2	033959 -	X	5,50 FX20
	AZ31674	RIM	2	033959 -	X	8X16 (SUB FOR AZ36100)
	AZ31527	RIM	2	033959 -	X	(A) 9X18
	AZ32667	RIM	2	033959 -	X	(A) 9X24 (SUB FOR AZ31673)
16	Z11822	WEIGHT	AR		X	(SUB FOR Z10862, Z11426)
17	14M7142	NUT	AR		X	(8) W/ Z10862, (16) W/ Z10862 AND Z10861)
18	12M7014	LOCK WASHER	AR		X	(8) W/ Z10862, (16) W/ Z10862 AND Z10861)
19	19M7495	CAP SCREW	AR		X	M16X100 (W/ Z10862)
	19M7596	CAP SCREW	AR		X	M16X160 (W/ Z10861 AND Z10862)
	19M6824	CAP SCREW	AR		X	M16X120 (W/ Z11822)
20	AZ16587	TIRE VALVE STEM	2		X	
21	24M7049	WASHER	AR		X	18MM
22	.....	TIRE	2		X	13,0/65-16 6PR
23	.....	TIRE	2		X	7,50-16 6PR, 7,50-20 6PR
24	.....	TIRE	2		X	11.2-24 8PR
	.....	TIRE	2		X	(A) 9-24 FI (A) 9,5-24 6PR

(A) WIDE REAR AXLE
ESSIEU ARRIERE LARGE
BREITE HINTERACHSE
ASSALE POSTERIORE LARGO
EJE TRASERO ANCHO
BRED BAKAXEL

COPYRIGHT©1994 - 2008 DEERE & COMPANY Moline, Illinois All rights reserved

(1I04) REAR WHEELS WITH HUB
ROUES ARRIERE ET MOYEU
HINTERRAEDER MIT NABEN
RUOTE POSTERIORI CON MOZZO
RUEDAS TRASERAS CON CUBOS
BAKHJUL MED NAV

KEY	PART NO.	PART NAME	QTY	SERIAL NO.		955	REMARKS
25	19H3546	CAP SCREW	16	033959	-	X	5/8"X1-3/8"

(A) WIDE REAR AXLE
ESSIEU ARRIERE LARGE
BREITE HINTERACHSE
ASSALE POSTERIORE LARGO
EJE TRASERO ANCHO
BRED BAKAXEL

COPYRIGHT©1994 - 2008 DEERE & COMPANY Moline, Illinois All rights reserved

(PC4146) 955 Combine

(3C10) REAR WINDOW
FENETRE ARRIERE
RUECKFENSTER
FINESTRINO POSTERIORE
VENTANA POSTERIOR
BAKFOENSTER

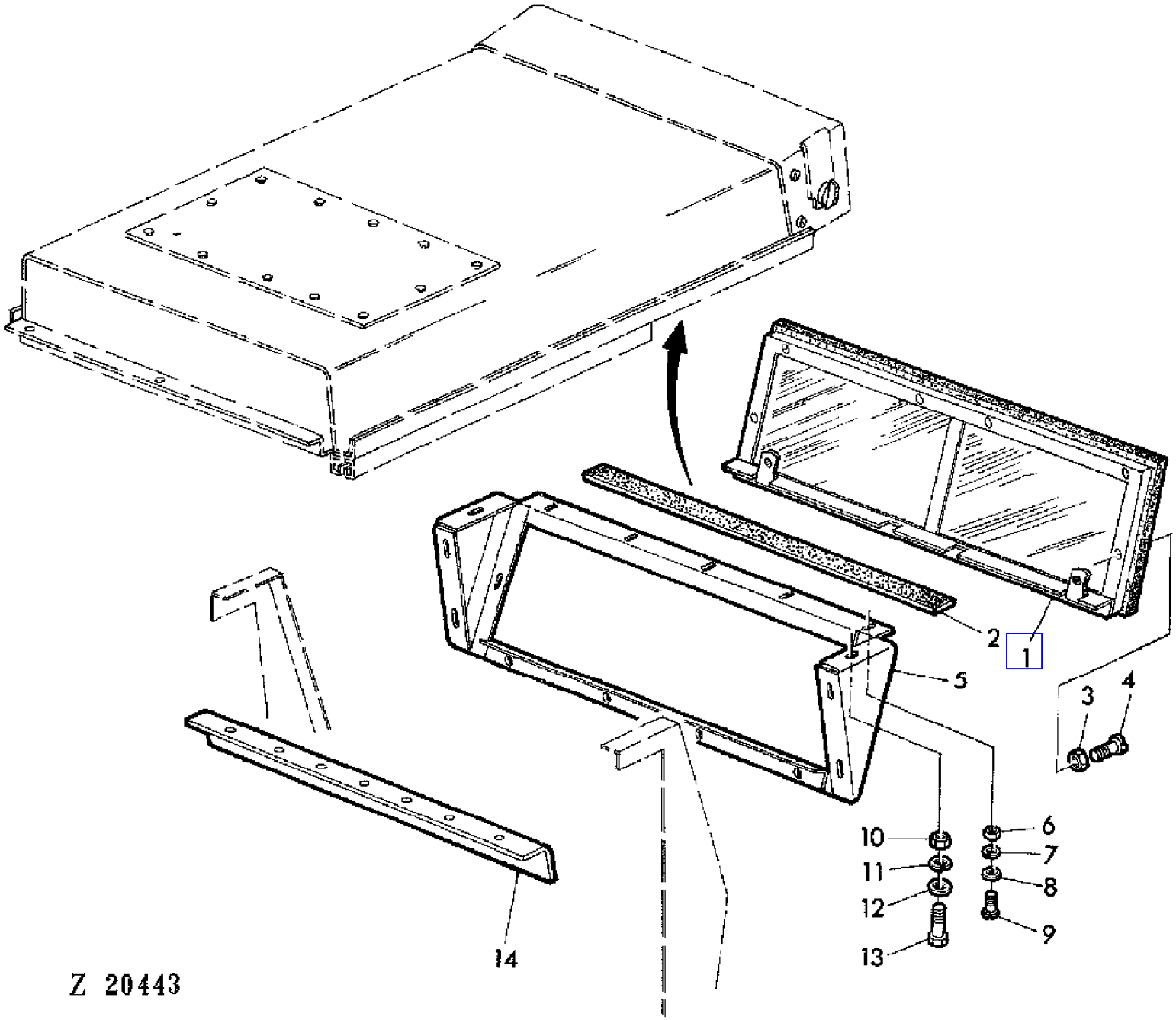

COPYRIGHT©1994 - 2008 DEERE & COMPANY Moline, Illinois All rights reserved

(3C10) REAR WINDOW
FENETRE ARRIERE
RUECKFENSTER
FINESTRINO POSTERIORE
VENTANA POSTERIOR
BAKFOENSTER

KEY	PART NO.	PART NAME	QTY	CAB SERIAL NO.		955	REMARKS
1	DA22653	WINDOW	1	K13172	-	X	
	DA23816	WINDOW	1	K13172	-	X	(B)
2	CA20531	WEATHERSTRIP	1	K13172	-	X	20X4MMX3000MM
3	14M7264	LOCK NUT	AR	K13172	-	X	M4
4	21M7033	SCREW	10	K13172	-	X	M4X16
5	DA22482	FRAME	1	K13172	-	X	(A)
6	14M7027	NUT	AR	K13172	-	X	M6
7	12M7012	LOCK WASHER	AR	K13172	-	X	6MM
8	24M7088	WASHER	AR	K13172	-	X	6,6MM
9	21M7031	SCREW	AR	K13172	-	X	M6X15
10	14M7029	NUT	AR	K13172	-	X	M8
11	12M7008	LOCK WASHER	AR	K13172	-	X	8MM
12	24M7036	WASHER	AR	K13172	-	X	9MM
13	19M7139	CAP SCREW	AR	K13172	-	X	M8X20
14	CA22425	HOLDER	1	K13172	-	X	

(A) ONLY ON CAB WITH AIR CONDITIONING
UNIQUEMENT SUR CABINE CLIMATISEE
NUR BEI KABINE MIT KLIMAANLAGE
SOLTANTO CON CABINA CONDIZIONATA
SOLO EN CABINAS CON ACONDICIONADOR DE AIRE
ENDAST VID LUFTKONDITIONERAD FOERARHYTT

(B) TINTED GLASS
VERRE TEINTE
GETOENTES GLAS
CRISTALLO TINTEGGIATO
CRISTAL TINTURADO
FARGAD RUTOR

COPYRIGHT©1994 - 2008 DEERE & COMPANY Moline, Illinois All rights reserved

(3E16) REAR WINDOW
FENETRE ARRIERE
RUECKFENSTER
FINESTRA POSTERIORE
VENTANA TRASERA
BAKRE FONSTER

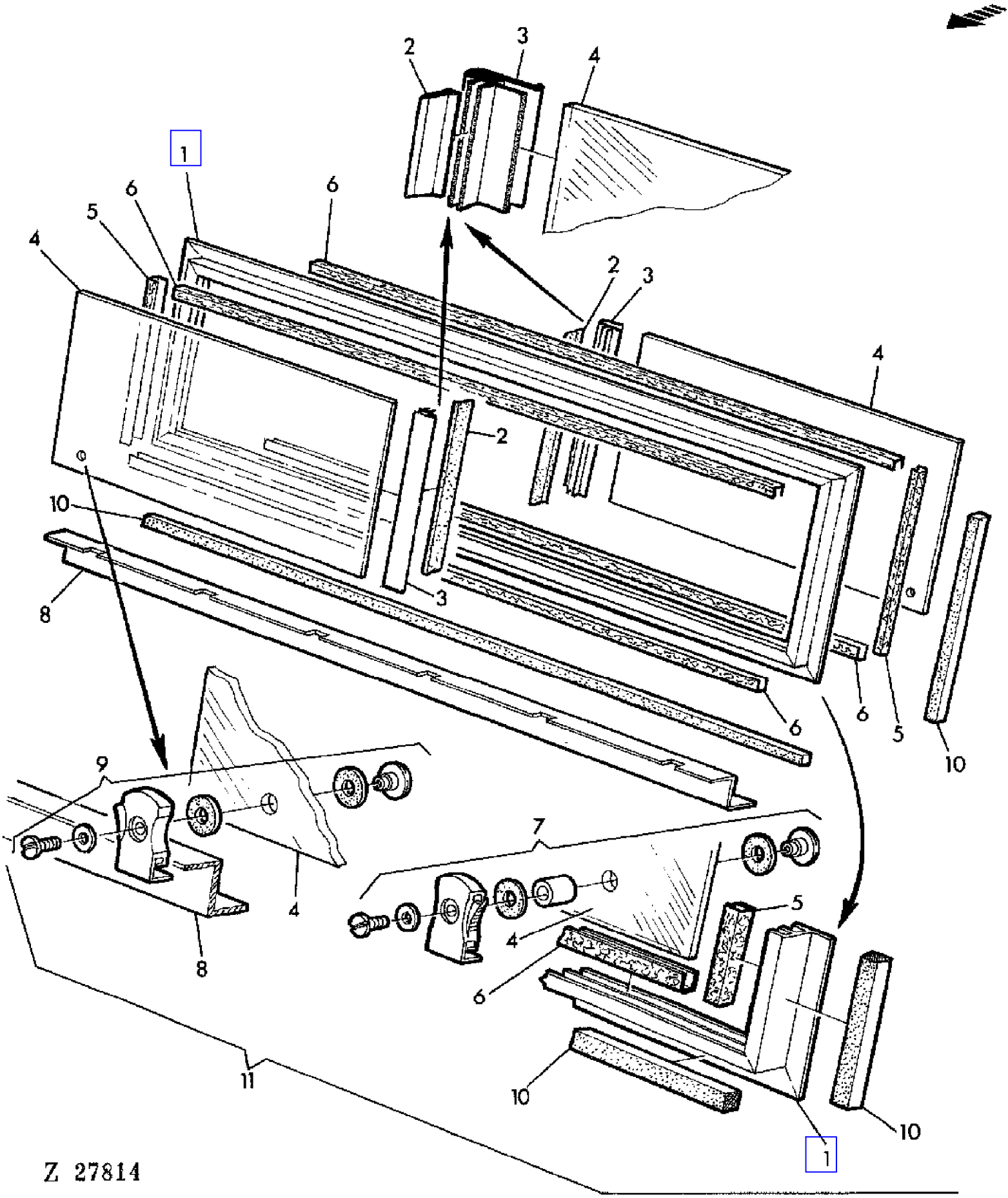

COPYRIGHT©1994 - 2008 DEERE & COMPANY Moline, Illinois All rights reserved

(3E16) REAR WINDOW
FENETRE ARRIERE
RUECKFENSTER
FINESTRA POSTERIORE
VENTANA TRASERA
BAKRE FONSTER

KEY	PART NO.	PART NAME	QTY	SERIAL NO.	955	REMARKS
1	DA23784	FRAME	1		X	
2	CA23789	FLAP	2		X	
3	CA23790	FELT	2		X	
4	CA23785	WINDOWPANE	2		X	
	CA23834	WINDOWPANE	2		X	(A)
5	CA23791	FELT	2		X	
6	CA23792	FELT	4		X	
7	DA23786	KNOB	1		X	LH
8	CA23788	STRAP	1		X	
9	DA23787	KNOB	1		X	RH
10	CA23793	GASKET	AR		X	
11	DA23816	WINDOW	1		X	(A) ASSY
	DA22653	WINDOW	1	K13173 -	X	ASSY

(A) TINTED GLASS
VERRE TEINTE
GETOENTES GLAS
CRISTALLO TINTEGGIATO
CRISTAL TINTURADO
FARGAD RUTOR

COPYRIGHT©1994 - 2008 DEERE & COMPANY Moline, Illinois All rights reserved

(4C19) RETURN PAN WITH SIEVE FRAME AND SIEVES
TABLE DE RETOUR,CADRE ET GRILLES
RUECKLAUFBODEN MIT SIEBRAHMEN UND SIEBE
PIANO DI RITORNO CON CASSONCINI E CRIVELLI
CHAPA TRANSPORTADORA DE RETORNO CON MARCOS DE CRIBAS Y CRIB.
RETURPLAN MED SALL OCH RENSPLAT

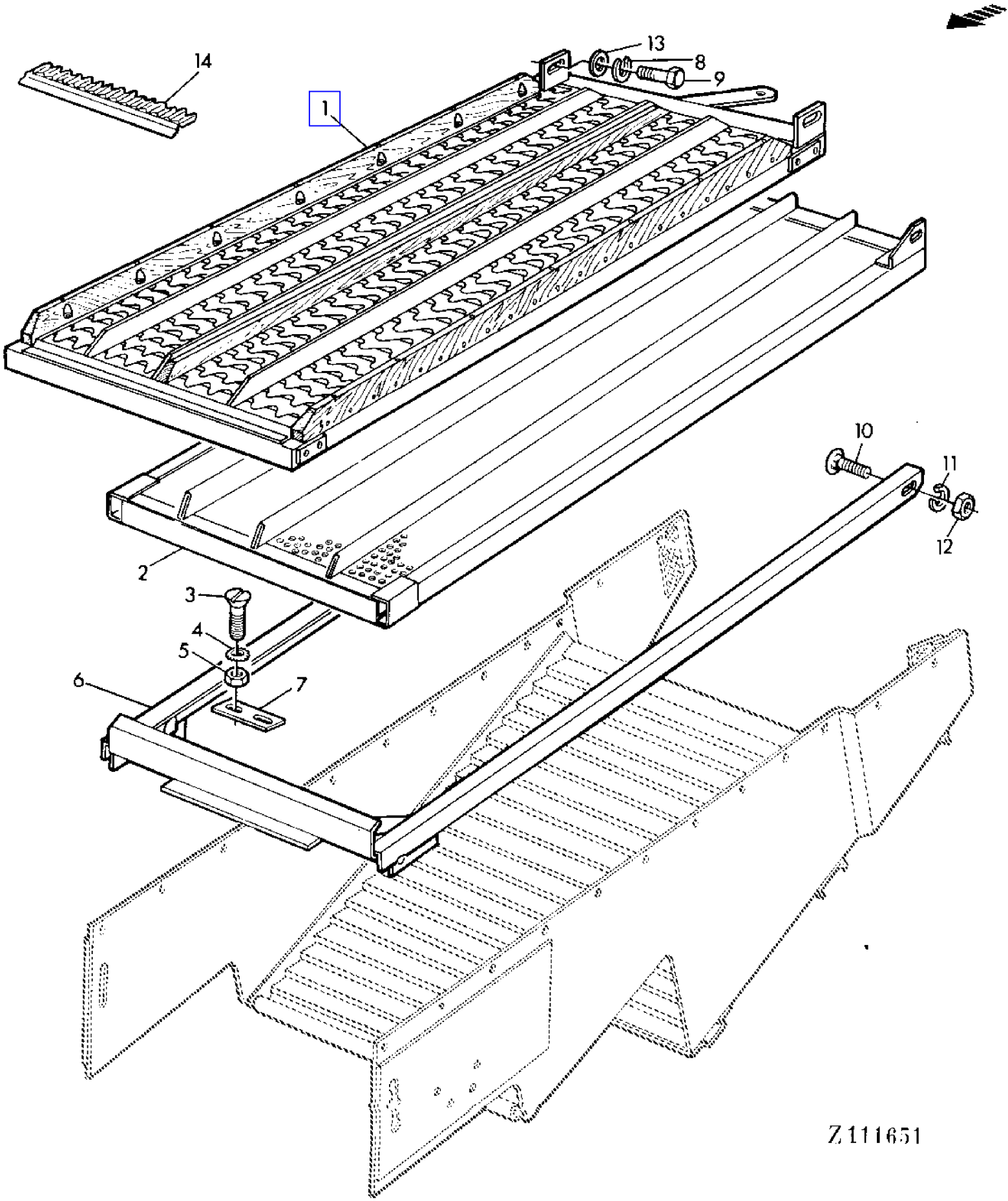

COPYRIGHT©1994 - 2008 DEERE & COMPANY Moline, Illinois All rights reserved

(4C19) RETURN PAN WITH SIEVE FRAME AND SIEVES
TABLE DE RETOUR,CADRE ET GRILLES
RUECKLAUFBODEN MIT SIEBRAHMEN UND SIEBE
PIANO DI RITORNO CON CASSONCINI E CRIVELLI
CHAPA TRANSPORTADORA DE RETORNO CON MARCOS DE CRIBAS Y CRIB.
RETURPLAN MED SALL OCH RENSPLAT

KEY	PART NO.	PART NAME	QTY	SERIAL NO.	955	REMARKS
1	AZ10142	CHAFFER	1		X	
2	AZ12449	SIEVE	1		X	2,5MM
	AZ12450	SIEVE	1		X	4MM
	AZ12451	SIEVE	1		X	8MM
	AZ12452	SIEVE	1		X	10MM
	AZ12453	SIEVE	1		X	12MM
	AZ16274	SIEVE	1		X	13,5MM
	AZ12454	SIEVE	1		X	15MM
	AZ20808	SIEVE	1		X	17MM
3	21M5525	SCREW	4		X	M5X16
4	12M7062	LOCK WASHER	AR		X	6MM
5	14M7028	NUT	AR		X	M5
6	AZ29237	FRAME	1		X	(SUB FOR AZ10123)
7	Z39723	GUIDE	2		X	
8	12M7013	LOCK WASHER	2		X	10MM
9	19M7167	CAP SCREW	2		X	M10X25
10	03M7090	BOLT	2		X	M8X15
11	12M7008	LOCK WASHER	14		X	8MM
12	14M7029	NUT	14		X	M8
13	Z38269	WASHER	2		X	
14	Z44872	FINGER GRATE	AR		X	

COPYRIGHT©1994 - 2008 DEERE & COMPANY Moline, Illinois All rights reserved

(4C21) RETURN PAN WITH SIEVE FRAME AND SIEVES
TABLE DE RETOUR,CADRE ET GRILLES
RUECKLAUFBODEN MIT SIEBRAHMEN UND SIEBE
PIANO DI RITORNO CON CASSONCINI E CRIVELLI
CHAPA TRANSPORTADORA DE RETORNO CON MARCOS DE CRIBAS Y CRIB.
RETURPLAN MED SALL OCH RENSPLAT

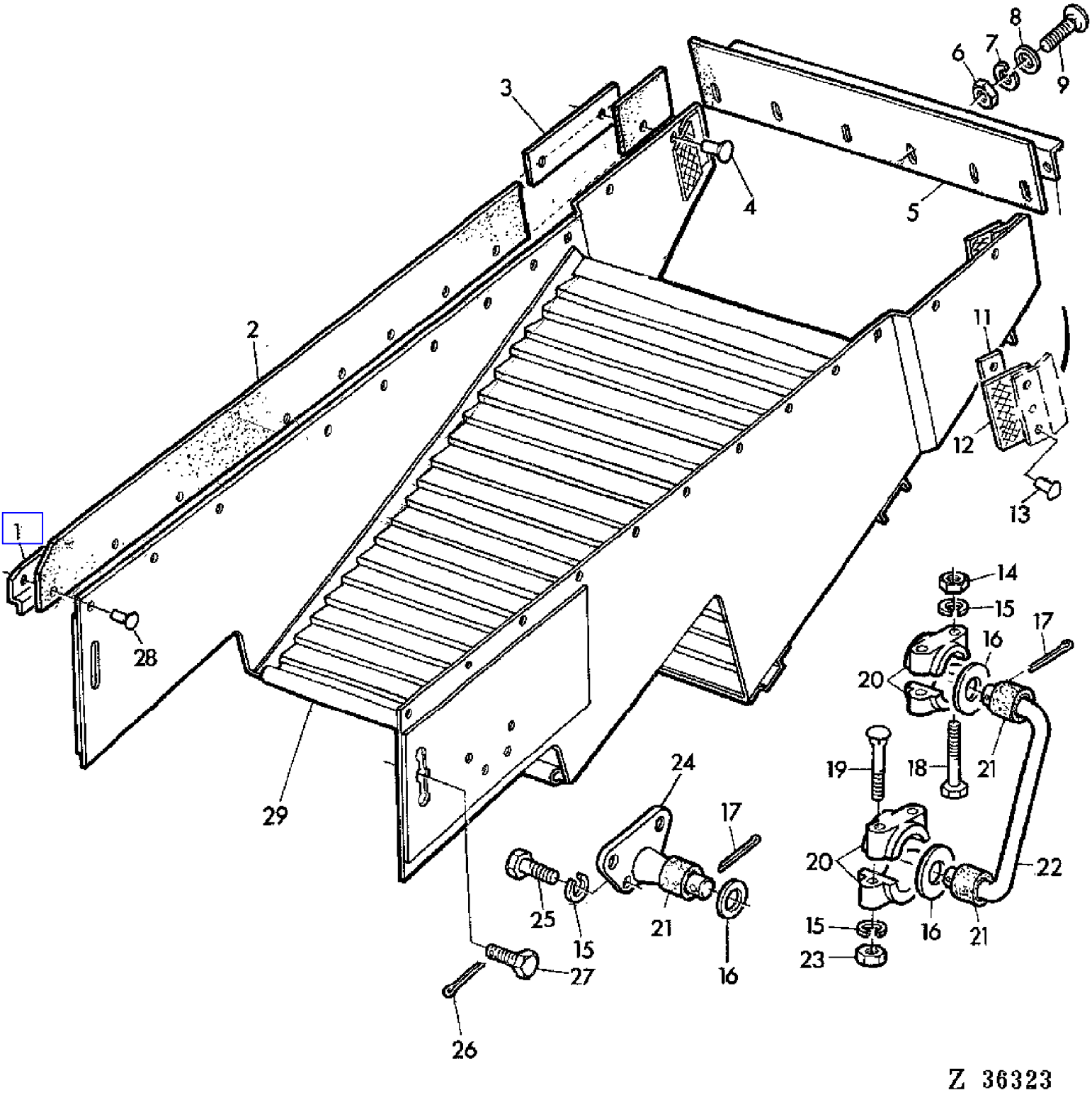

COPYRIGHT©1994 - 2008 DEERE & COMPANY Moline, Illinois All rights reserved

(4C21) RETURN PAN WITH SIEVE FRAME AND SIEVES
TABLE DE RETOUR,CADRE ET GRILLES
RUECKLAUFBODEN MIT SIEBRAHMEN UND SIEBE
PIANO DI RITORNO CON CASSONCINI E CRIVELLI
CHAPA TRANSPORTADORA DE RETORNO CON MARCOS DE CRIBAS Y CRIB.
RETURPLAN MED SALL OCH RENSPLAT

KEY	PART NO.	PART NAME	QTY	SERIAL NO.	955	REMARKS
1	AZ15594	REINFORCEMENT	1		X	LH
	AZ15595	REINFORCEMENT	1		X	RH
2	Z23764	GASKET	2		X	
3	Z23763	STRAP	2		X	
4	16M2524	RIVET	4		X	6X18MM
5	Z36424	GASKET	1		X	REAR (SUB FOR Z20234)
6	14M7027	NUT	10		X	M6
7	12M7012	LOCK WASHER	10		X	6MM
8	24M7088	WASHER	10		X	6,6MM
9	21M7031	SCREW	10		X	M6X15
10	Z35557	STRAP	1		X	(SUB FOR Z20232)
11	Z36984	STRAP	2		X	
12	Z36523	GASKET	2	006456 -	X	
13	16M7081	RIVET	6		X	4X6MM
14	14M7147	NUT	4		X	M8X1
15	12M7008	LOCK WASHER	14		X	8MM
16	24M7049	WASHER	6		X	18MM
17	11M7020	COTTER PIN	6		X	4X22MM
18	19M7271	CAP SCREW	4		X	M8X1X65
19	03M7074	BOLT	4		X	M8X65
20	PK1103H	BEARING	8		X	
21	P42100	BUSHING	6		X	
22	AZ19245	HANGER	2		X	ASSY, INCL KEY 16
23	14M7029	NUT	14		X	M8
24	AZ19242	SHAFT	2		X	ASSY, INCL KEY 16
25	19M7297	CAP SCREW	8		X	M8X12
26	11M7022	COTTER PIN	2		X	4X30MM
27	Z20244	CAP SCREW	2		X	
28	16M2604	RIVET	18		X	6X18MM
29	AZ35001	RETURN PAN	1		X	INCL KEYS 1,2,3,4,28 (SUB FOR AZ10112)

COPYRIGHT©1994 - 2008 DEERE & COMPANY Moline, Illinois All rights reserved

(3D22) ROOF-AIR CONDITIONED CAB
TOIT-CABINE CLIMATISEE
DACH-KABINE MIT KLIMAANLAGE
TETTO-CABINA CONDIZIONATA
TECHO-CABINA CON AIRE ACONDICIONADO
TAK-HYTT MED LUFTKONDITIONERING

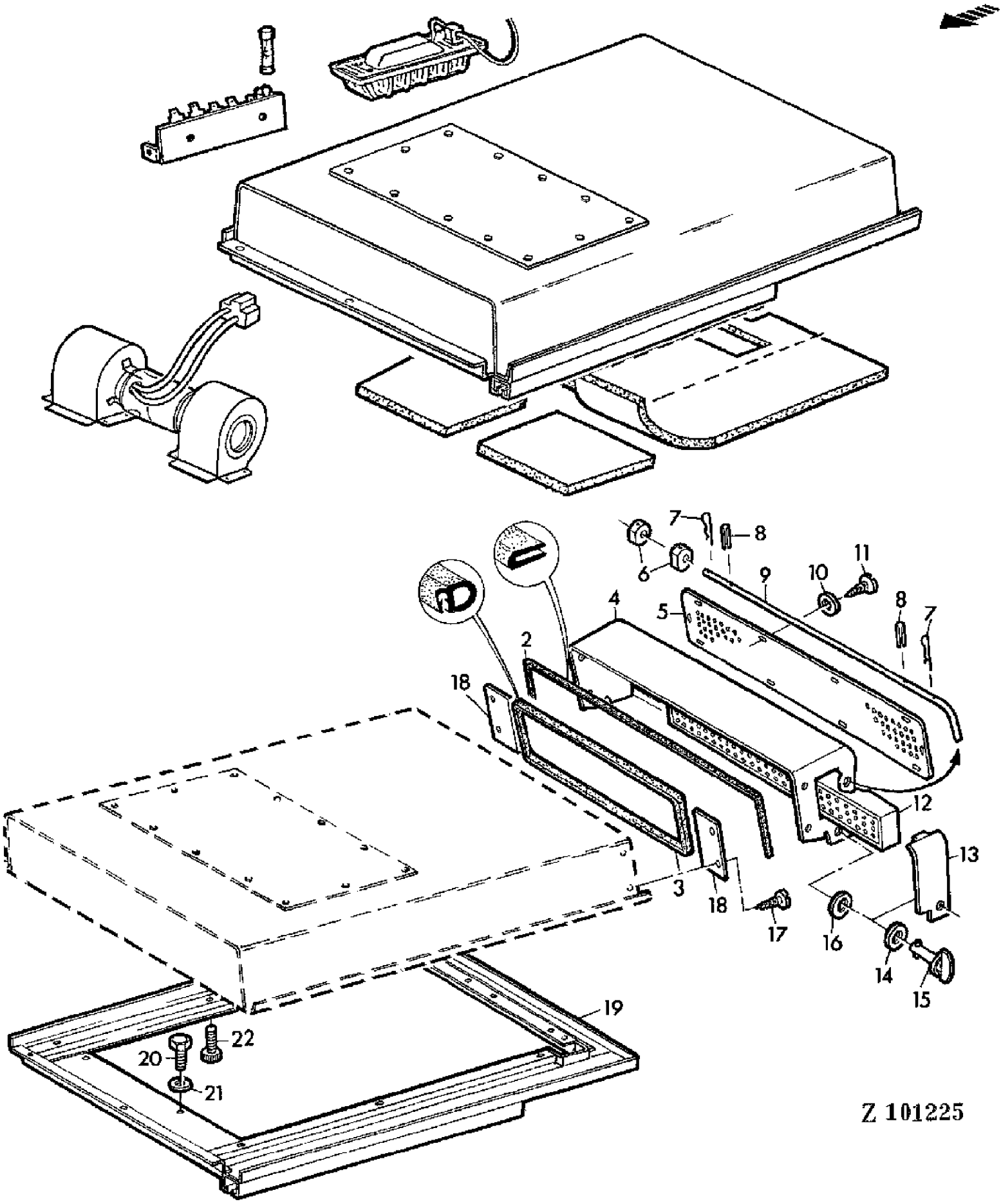

COPYRIGHT©1994 - 2008 DEERE & COMPANY Moline, Illinois All rights reserved

(3D22) ROOF-AIR CONDITIONED CAB
TOIT-CABINE CLIMATISEE
DACH-KABINE MIT KLIMAANLAGE
TETTO-CABINA CONDIZIONATA
TECHO-CABINA CON AIRE ACONDICIONADO
TAK-HYTT MED LUFTKONDITIONERING

KEY	PART NO.	PART NAME	QTY	SERIAL NO.	955	REMARKS
1	AH94022	ROOF	1		X	
2	CA20224	GASKET	1		X	
3	CA21487	GASKET	1		X	
4	DA20240	HOUSING	1		X	
5	CA20236	SCREEN	1		X	
6	CA20331	GUIDE	2		X	
7	11M7020	COTTER PIN	2		X	4X22MM
8	34M7029	SPRING PIN	2		X	4X30MM
9	CA20247	ROD	1		X	
10	24M7088	WASHER	10		X	6MM
11	21M7199	SCREW	10		X	M5X10
12	AH80920	FILTER	1		X	
13	DA20237	COVER	1		X	
14	24H1254	WASHER	1		X	
15	AE31927	STUD	1		X	
16	E50846	LOCK WASHER	1		X	
17	H82734	SCREW	4		X	
18	CA20219	PLATE	2		X	
19	DA20203	CAB ROOF FRAME	1		X	
20	19M7167	CAP SCREW	4		X	M10X25
21	24M7040	WASHER	4		X	11MM
22	E33233	SCREW	13		X	

COPYRIGHT©1994 - 2008 DEERE & COMPANY Moline, Illinois All rights reserved

(1C08) ROTARY RADIATOR SCREEN
TAMIS ROTATIF DE RADIATEUR
ROTIERENDES KUEHLERSIEB
SCHERMO ROTATIVO DEL RADIATORE
REJILLA ROTATORIA DEL RADIADOR
ROTERANDE KYLARSKYDD

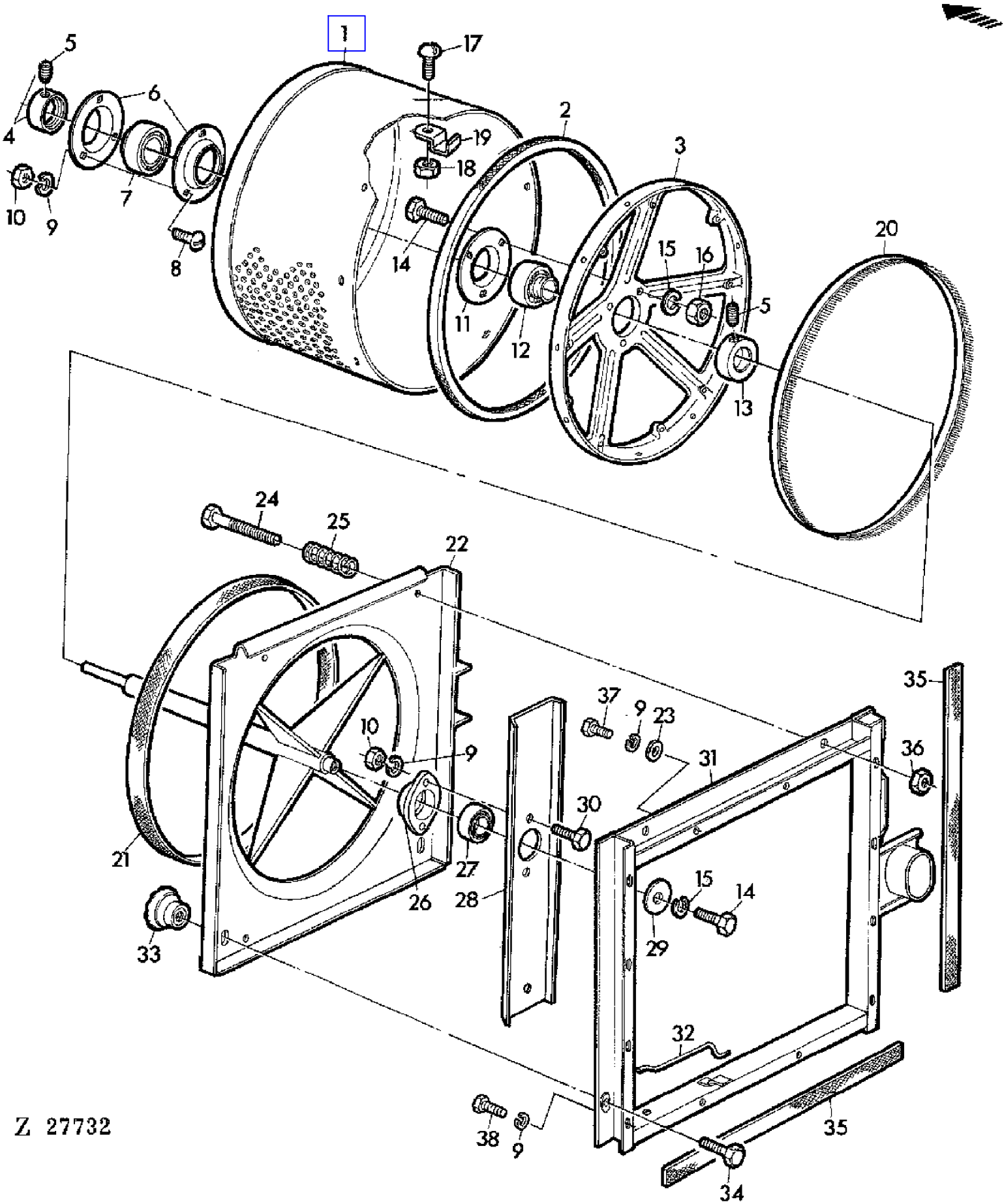

COPYRIGHT©1994 - 2008 DEERE & COMPANY Moline, Illinois All rights reserved

(1C08) ROTARY RADIATOR SCREEN
TAMIS ROTATIF DE RADIATEUR
ROTIERENDES KUEHLERSIEB
SCHERMO ROTATIVO DEL RADIATORE
REJILLA ROTATORIA DEL RADIADOR
ROTERANDE KYLARSKYDD

KEY	PART NO.	PART NAME	QTY	SERIAL NO.	955	REMARKS
1	AZ19965	SCREEN	1		X	
2	Z32165	GASKET	1		X	
3	Z10872	SPIDER	1		X	
4	AZ20029	ECCENTRIC LOCKING COLLAR	1		X	INCL KEY 5
5	22M7079	SET SCREW	2		X	6X6MM
6	Z31371	QUILL	2		X	
7	AZ19963	BALL BEARING	1		X	
8	03M7092	BOLT	3		X	M6X16
9	12M7012	LOCK WASHER	12		X	6MM
10	14M7027	NUT	5		X	M6
11	Z33117	QUILL	1		X	
12	JD39108	BALL BEARING	1		X	
13	AZ13117	ECCENTRIC LOCKING COLLAR	1		X	INCL KEY 5
14	19M7139	CAP SCREW	4		X	M8X20
15	12M7008	LOCK WASHER	4		X	8MM
16	14M7029	NUT	3		X	M8
17	21M7031	SCREW	12		X	M6X15
18	14M7165	LOCK NUT	12		X	M6
19	Z35159	CLAMP	12		X	
20	AZ21454	BRUSH	1		X	
21	Z39668	GASKET	1		X	(SUB FOR Z33520, Z38510)
22	AZ22048	FRAME	1		X	
23	Z26250	WASHER	4		X	6,4MM
24	19M7164	CAP SCREW	2		X	M8X50
25	Z33018	COMPRESSION SPRING	2		X	
26	Z33854	PRESSED FLANGED HOUSING	1		X	
27	JD29980	BALL BEARING	1		X	
28	Z39834	FAN BLADE	1		X	(SUB FOR Z33022)
29	24M7024	WASHER	1		X	9,5MM
30	19M7286	CAP SCREW	2		X	M6X25
31	AZ22019	FRAME	1		X	
32	Z33073	SUPPORT	1		X	
33	AZ22047	GRIP	2		X	
34	19M7163	CAP SCREW	2		X	M8X25
35	Z32847	WEATHERSTRIP	8		X	
36	14M7166	LOCK NUT	2		X	M8
37	19M6614	CAP SCREW	AR		X	M6X12
38	19M7159	CAP SCREW	AR		X	M6X15

COPYRIGHT©1994 - 2008 DEERE & COMPANY Moline, Illinois All rights reserved

(3C12) SEALING PARTS-OPERATOR'S PLATFORM
JOINTS PLATE-FORME DE CONDUITE
ABDICHTUNG-FAHRERPLATTFORM
GUARNIZIONI-PIATTAFORMA DELL'OPERATORE
PIEZAS ANTIVIBRATILES PARA LA PLATAFORMA DE CONDUCCION
GUMMITAETNING-FOERARPLATTFORM

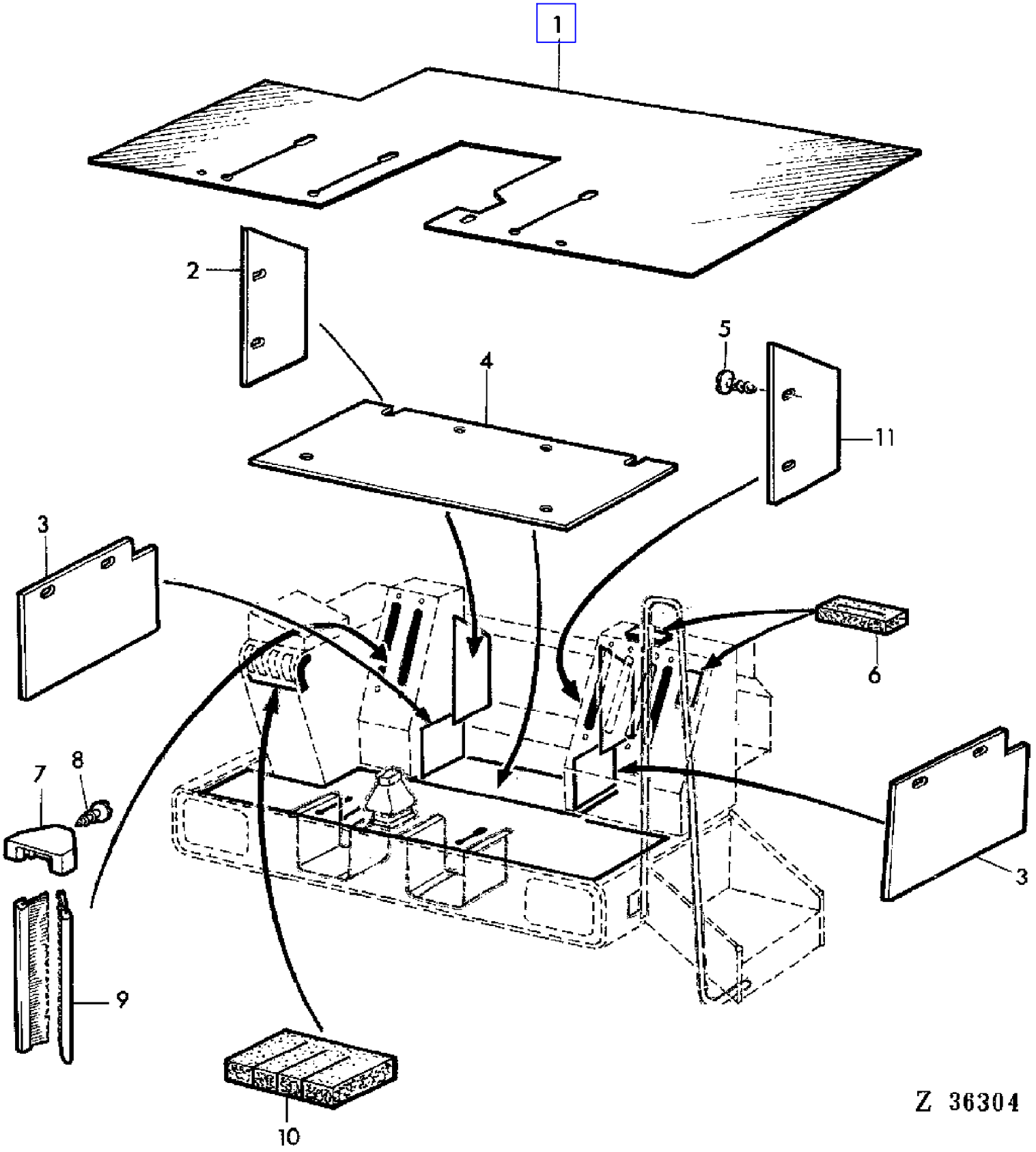

COPYRIGHT©1994 - 2008 DEERE & COMPANY Moline, Illinois All rights reserved

(3C12) SEALING PARTS-OPERATOR'S PLATFORM
JOINTS PLATE-FORME DE CONDUITE
ABDICHTUNG-FAHRERPLATTFORM
GUARNIZIONI-PIATTAFORMA DELL'OPERATORE
PIEZAS ANTIVIBRATILES PARA LA PLATAFORMA DE CONDUCCION
GUMMITAETNING-FOERARPLATTFORM

KEY	PART NO.	PART NAME	QTY	SERIAL NO.	955	REMARKS
1	CA19451	MAT	1	- 026722	X	
	Z39465	MAT	1	026723 -	X	
2	CA19594	DUST SHIELD	1		X	
3	CA19580	DUST SHIELD	2		X	
4	CA19596	DUST SHIELD	1		X	
5	37M7029	SCREW	14		X	5,5X13MM
6	CA19567	FOAM PAD	2		X	
7	CA19614	HOLDER	12		X	
8	37M7020	SCREW	12		X	4,2X13MM
9	CA19613	BRUSH	12		X	
10	CA19593	FOAM PAD	1		X	
11	CA19595	DUST SHIELD	1		X	

COPYRIGHT©1994 - 2008 DEERE & COMPANY Moline, Illinois All rights reserved

(3C14) SEALING PARTS-OPERATOR'S PLATFORM
JOINTS PLATE-FORME DE CONDUITE
ABDICHTUNG-FAHRERPLATTFORM
GUARNIZIONI-PIATTAFORMA DELL'OPERATORE
PIEZAS ANTIVIBRATILES PARA LA PLATAFORMA DE CONDUCCION
GUMMITATNING-FORARPLATTFORM

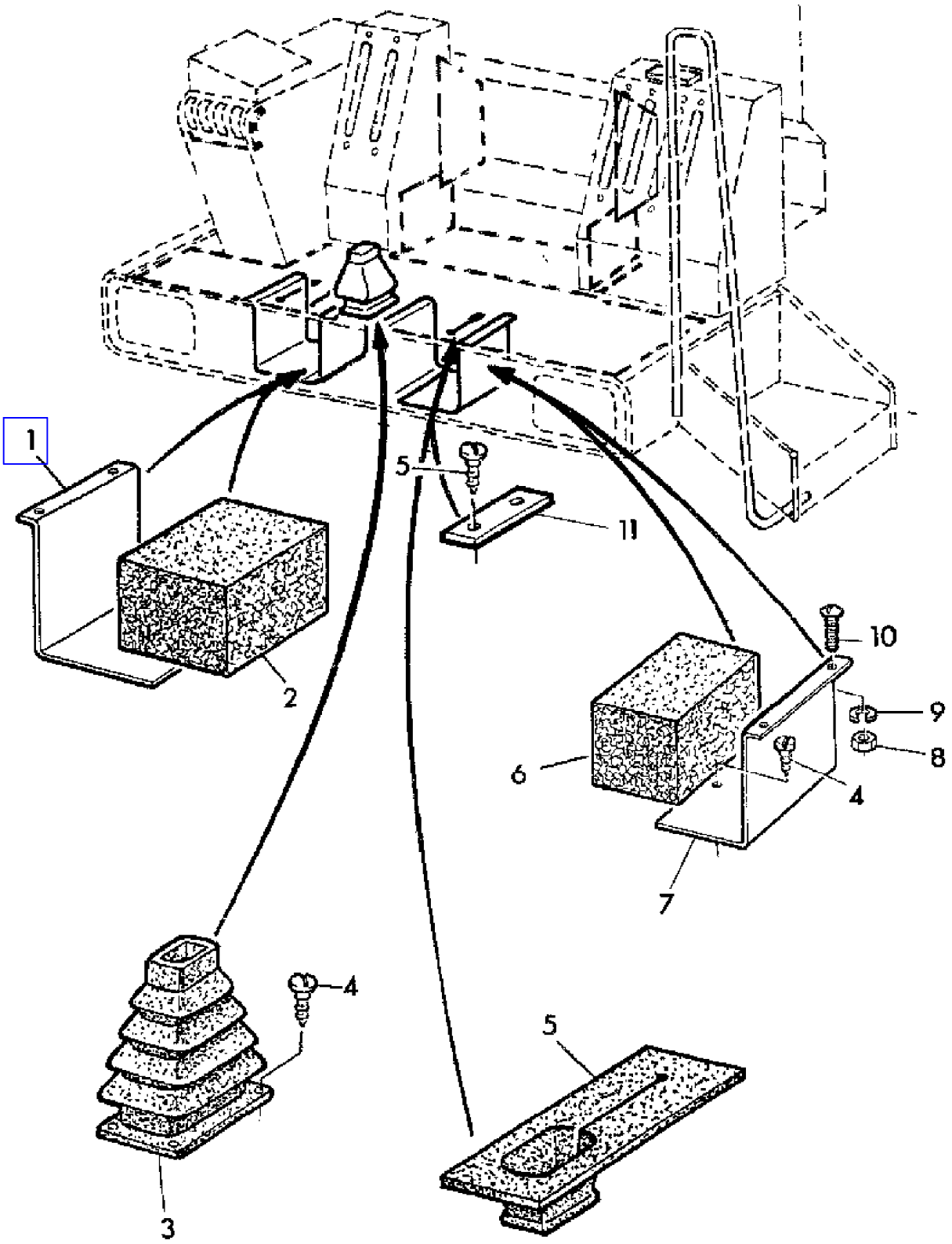

Z 101091

COPYRIGHT©1994 - 2008 DEERE & COMPANY Moline, Illinois All rights reserved

(3C14) SEALING PARTS-OPERATOR'S PLATFORM
JOINTS PLATE-FORME DE CONDUITE
ABDICHTUNG-FAHRERPLATTFORM
GUARNIZIONI-PIATTAFORMA DELL'OPERATORE
PIEZAS ANTIVIBRATILES PARA LA PLATAFORMA DE CONDUCCION
GUMMITATNING-FORARPLATTFORM

KEY	PART NO.	PART NAME	QTY	SERIAL NO.			955	REMARKS
1	CA19574	RETAINER	1		-	026722	X	
2	CA19568	FOAM PAD	1		-	026722	X	
3	Z41547	BOOT	1				X	(SUB FOR CA19634, Z39463)
4	37M7029	SCREW	AR				X	5,5X13MM
5	Z39464	BOOT	AR	026723	-		X	
6	CA19569	FOAM PAD	1		-	026722	X	
7	CA19575	RETAINER	1		-	026722	X	
8	14M7027	NUT	AR				X	M6
9	12M7012	LOCK WASHER	AR				X	6MM
10	21M7031	SCREW	AR				X	M6X15
11	Z38061	STRAP	AR				X	

COPYRIGHT©1994 - 2008 DEERE & COMPANY Moline, Illinois All rights reserved

(4C25) SHOE CRANK AND PITMAN
ARBRE MANIVELLE ET BIELLE
KURBELSTANGE UND -WELLE
BIELLE E ALBERO A GOMITI
EXCENTRICA Y BIELA DE VAIVEN
VEVSTAKE OCH VEVAXEL

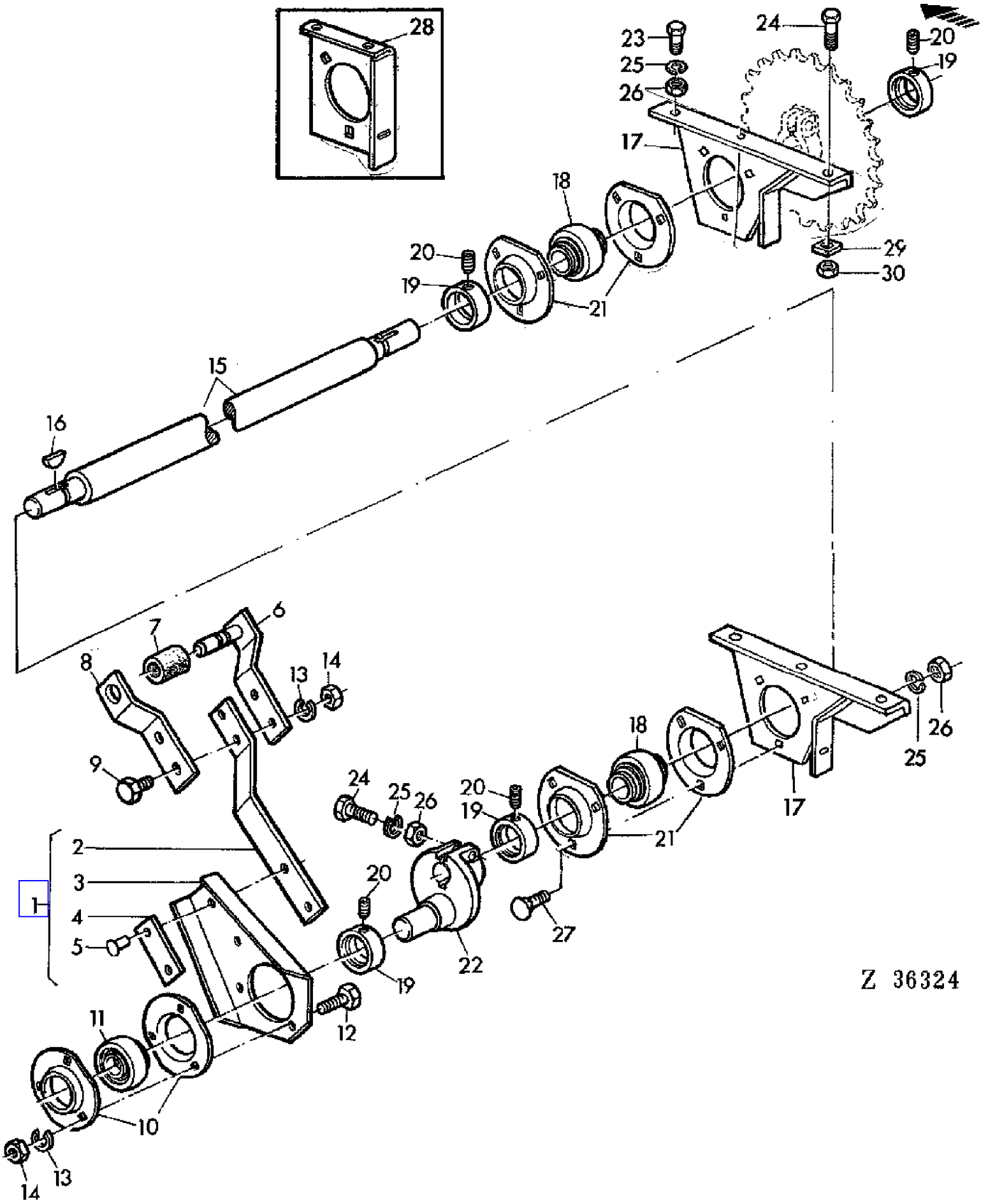

COPYRIGHT©1994 - 2008 DEERE & COMPANY Moline, Illinois All rights reserved

(4C25) SHOE CRANK AND PITMAN
ARBRE MANIVELLE ET BIELLE
KURBELSTANGE UND -WELLE
BIELLE E ALBERO A GOMITI
EXCENTRICA Y BIELA DE VAIVEN
VEVSTAKE OCH VEVAXEL

KEY	PART NO.	PART NAME	QTY	SERIAL NO.	955	REMARKS
1	AZ17693	ARM	2		X	ASSY, INCL KEYS 2-5
2	Z20171	RETAINER	2		X	
3	Z29076	BRACKET	2		X	
4	Z20170	STRAP	2		X	
5	16M2552	RIVET	6		X	8X32MM
6	AZ25769	HOLDER	2		X	(SUB FOR AZ10085)
7	P42100	BUSHING	2		X	
8	Z36806	RETAINER	2		X	(SUB FOR Z20174)
9	19M7288	CAP SCREW	4		X	M8X30
10	P47232	PRESSED FLANGED HOUSING	4		X	
11	JD39102	BALL BEARING	2		X	
12	19M7139	CAP SCREW	6		X	M8X20
13	12M7008	LOCK WASHER	10		X	8MM
14	14M7029	NUT	10		X	M8
15	Z30990	SHAFT	1		X	
16	26M6733	SHAFT KEY	2		X	8X13MM
17	AZ29647	BRACKET	2	026723 -	X	
18	JD39103	BALL BEARING	2		X	
19	AZ10044	ECCENTRIC LOCKING COLLAR	4		X	ASSY, INCL KEY 20
20	AZ19844	SET SCREW	4		X	KIT
21	Z40973	PRESSED FLANGED HOUSING	4		X	(SUB FOR P45502, Z38395)
22	Z11376	CRANK	1		X	LH
23	19M7169	CAP SCREW	AR		X	M10X35
24	19M7287	CAP SCREW	3		X	M10X50
25	12M7013	LOCK WASHER	6		X	10MM
26	14M7140	NUT	6		X	M10
27	03M7017	BOLT	6		X	M10X25
28	Z36675	BRACKET	2	- 026722	X	(SUB FOR Z34388)
29	Z40124	SPACER	1		X	
30	14M7167	LOCK NUT	1		X	M10

COPYRIGHT©1994 - 2008 DEERE & COMPANY Moline, Illinois All rights reserved

(1A13) SHORT ENGINE
MOTEUR DEPOUILLE POUR RECHANGE
KURZMOTOR
MOTORE CORTO
MOTOR BASICO
KORT MOTOR

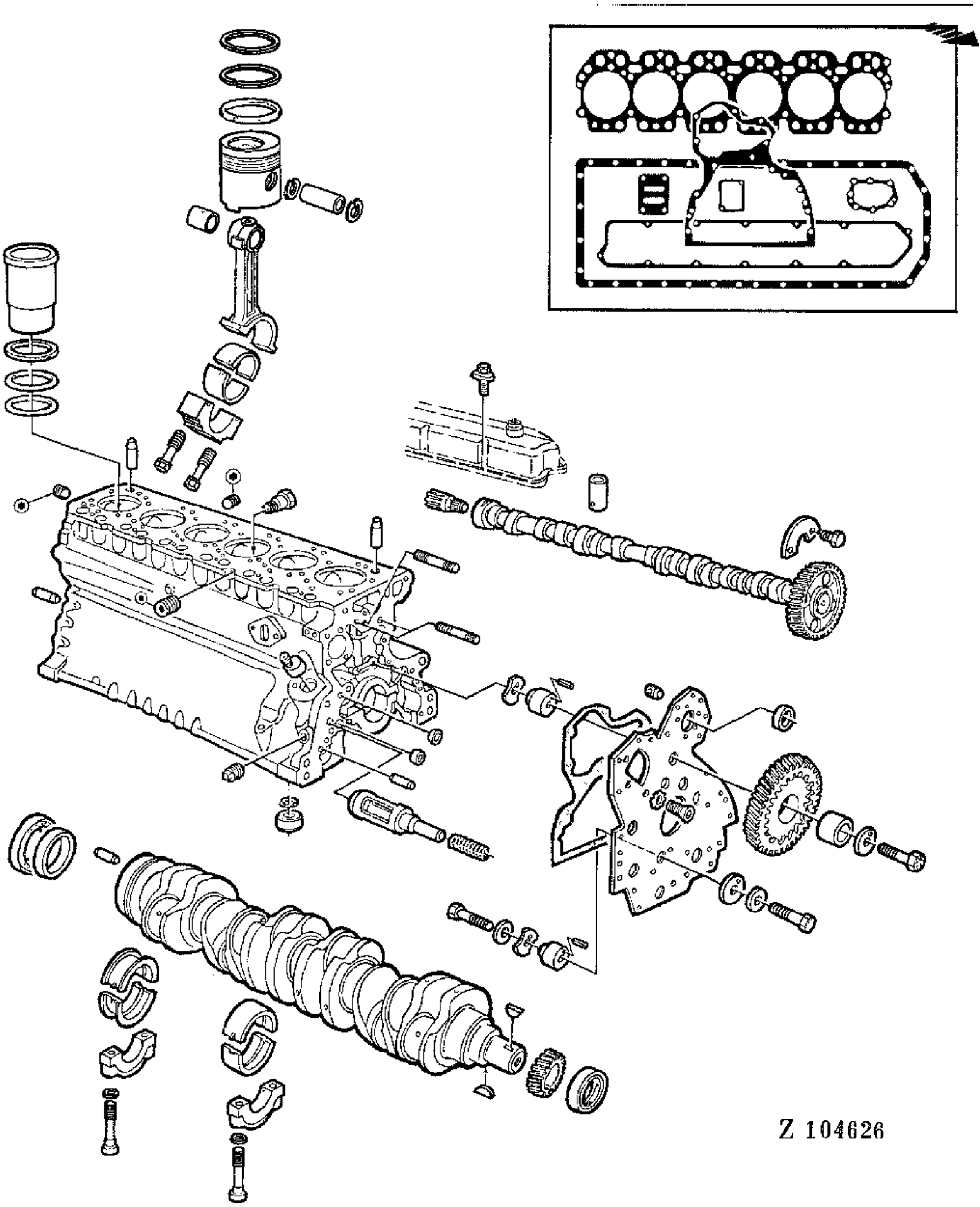

COPYRIGHT©1994 - 2008 DEERE & COMPANY Moline, Illinois All rights reserved

(PC4146) 955 Combine

(1A13) SHORT ENGINE
MOTEUR DEPOUILLE POUR RECHANGE
KURZMOTOR
MOTORE CORTO
MOTOR BASICO
KORT MOTOR

KEY	PART NO.	PART NAME	QTY	ENGINE SERIAL NO.			955	REMARKS
1	RE19873	SHORT BLOCK ASSEMBLY	AR		-	377809	X	ASSY (ORD W/ 15H616) (SUB FOR AR97285, AR97287, DD12195, DD13433, RE16763)

COPYRIGHT©1994 - 2008 DEERE & COMPANY Moline, Illinois All rights reserved

(1A15) SHORT ENGINE
MOTEUR DEPOUILLE POUR RECHANGE
KURZMOTOR
MOTORE CORTO
MOTOR BASICO
KORT MOTOR

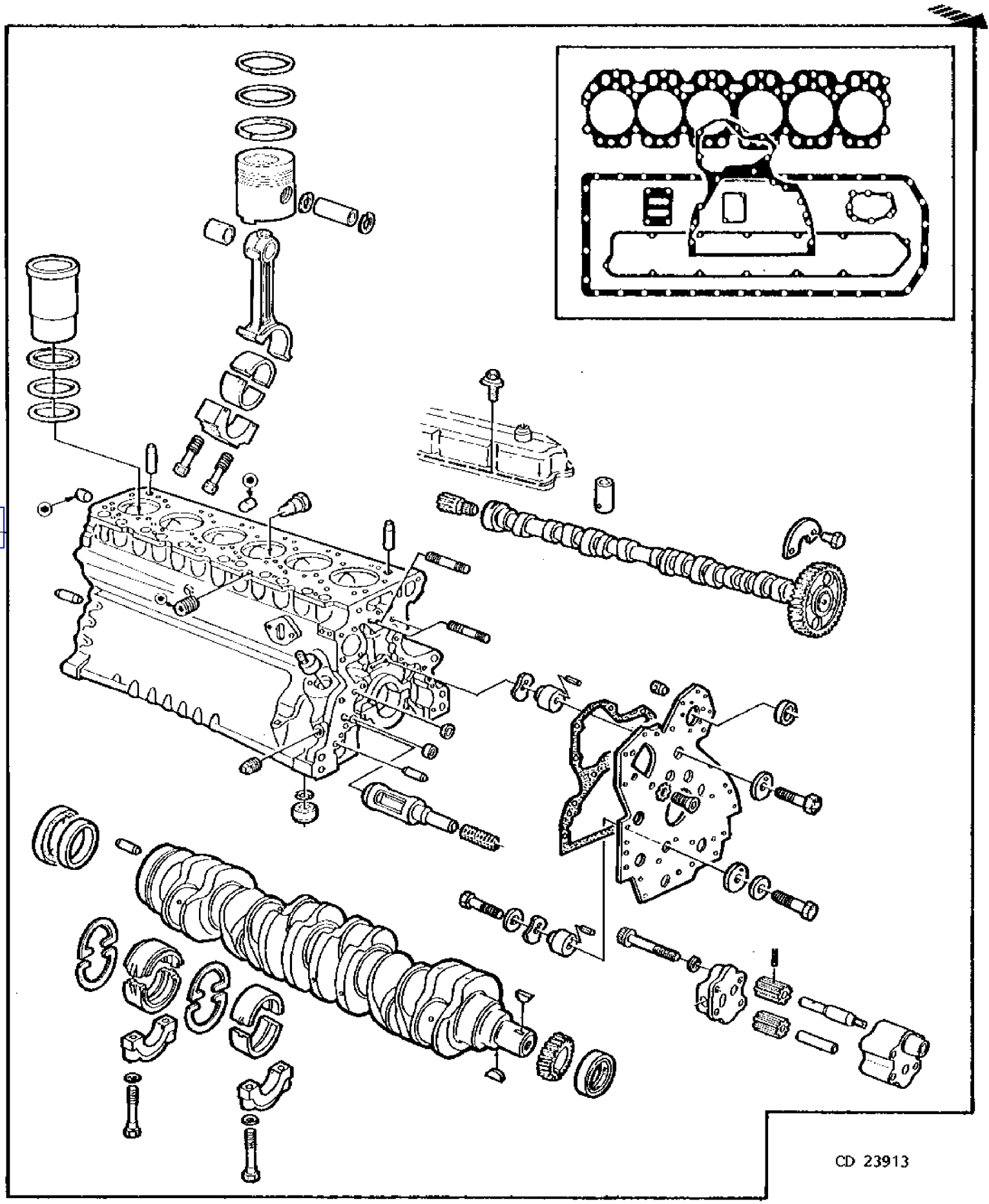

COPYRIGHT©1994 - 2008 DEERE & COMPANY Moline, Illinois All rights reserved

(PC4146) 955 Combine

(1A15) SHORT ENGINE
MOTEUR DEPOUILLE POUR RECHANGE
KURZMOTOR
MOTORE CORTO
MOTOR BASICO
KORT MOTOR

KEY	PART NO.	PART NAME	QTY	ENGINE SERIAL NO.		955	REMARKS
1	RE16816	SHORT BLOCK ASSEMBLY	AR	377810	-	X	ASSY (ORD RE25569, (26) R85363) (SUB FOR AR97244, DD13431)
	RE25569	SHORT BLOCK ASSEMBLY	AR	377810	-	X	ASSY

COPYRIGHT©1994 - 2008 DEERE & COMPANY Moline, Illinois All rights reserved

(PC4146) 955 Combine

(2F20) SIDE COVERS,LEFT-HAND
HABILLAGE GAUCHE
SEITENVERKLEIDUNG,LINKS
RIVESTIMENTI SINISTRI
CHAPAS DE REVESTIMIENTO,LADO IZQUIERDO
VANSTER SIDOSKYDDOR

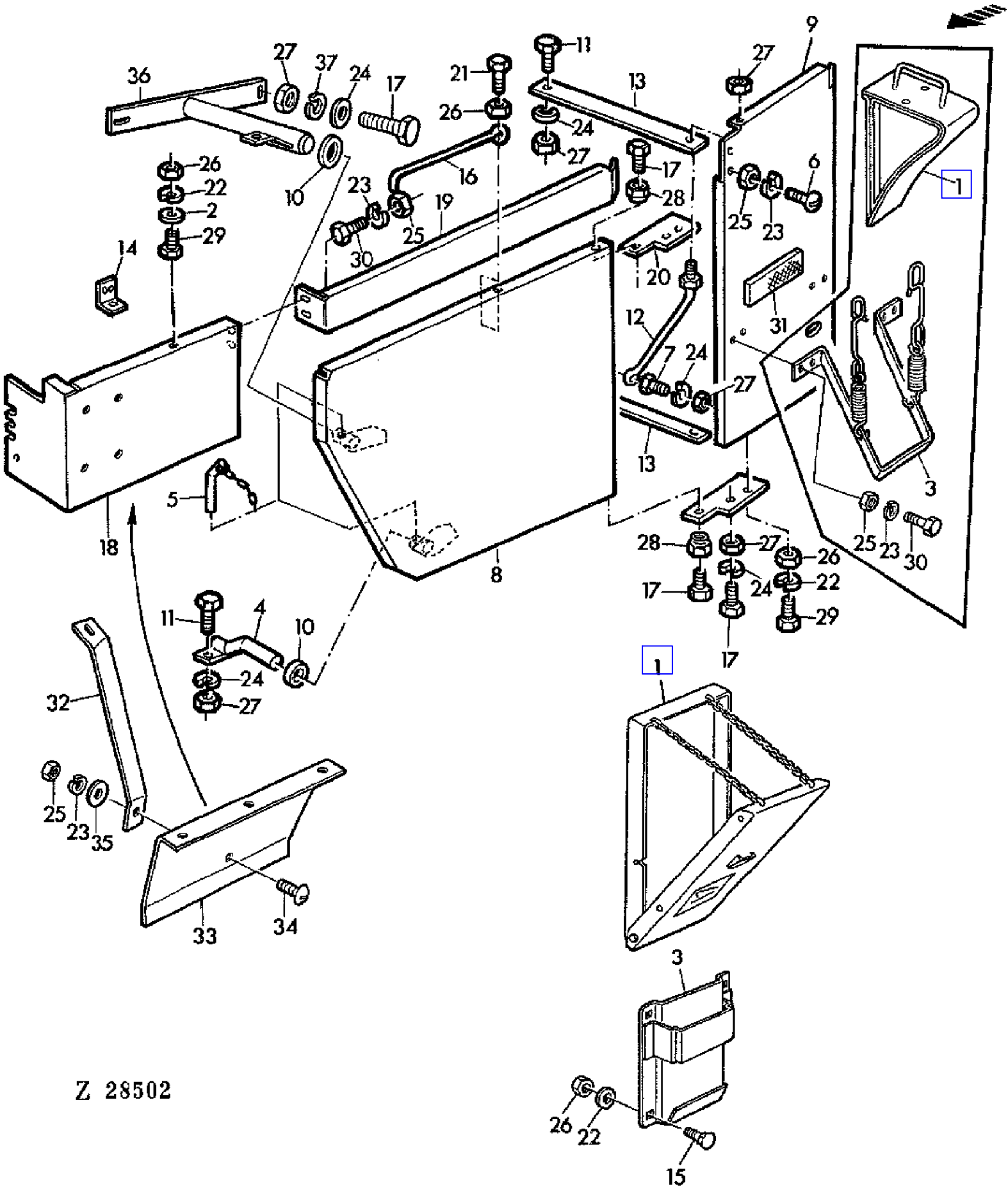

COPYRIGHT©1994 - 2008 DEERE & COMPANY Moline, Illinois All rights reserved

(2F20) SIDE COVERS,LEFT-HAND
HABILLAGE GAUCHE
SEITENVERKLEIDUNG,LINKS
RIVESTIMENTI SINISTRI
CHAPAS DE REVESTIMIENTO,LADO IZQUIERDO
VANSTER SIDOSKYDDOR

KEY	PART NO.	PART NAME	QTY	SERIAL NO.			955	REMARKS
1	AZ21943	CHOCK BLOCK	1		-	013377	X	AR
	AL26777	CHOCK BLOCK	1	013378	-		X	AR
2	24M7036	WASHER	AR				X	9MM
3	AZ24379	HOLDER	1		-	013377	X	AR
	AL26778	SUPPORT	1	013378	-		X	AR
4	AZ12005	SUPPORT	1				X	
5	AZ12019	PIN	2				X	
6	21M7031	SCREW	2				X	M6X15
7	19M7168	CAP SCREW	1				X	M10X30
8	AZ21949	SHIELD	1				X	
9	AZ21950	SHIELD	1				X	
10	Z21921	STOP	2				X	
11	19M7167	CAP SCREW	5				X	M10X25
12	Z21927	ROD	1				X	
13	Z21928	SHEET	2				X	
14	Z24046	ANGLE	1				X	
15	21M7160	SCREW	4	013378	-		X	M8X18
16	Z31813	HOOK	1				X	
17	19M7166	CAP SCREW	8				X	M10X20
18	Z32282	GUARD	1				X	
19	Z32814	GUARD	1				X	
20	Z32817	HOLDER	2				X	
21	19M7163	CAP SCREW	1				X	M8X25
22	12M7008	LOCK WASHER	4				X	8MM
23	12M7012	LOCK WASHER	13				X	6MM
24	12M7013	LOCK WASHER	14				X	10MM
25	14M7027	NUT	13				X	M6
26	14M7029	NUT	4				X	M8
27	14M7140	NUT	12				X	M10
28	14M7167	LOCK NUT	2				X	M10
29	19M7139	CAP SCREW	3				X	M8X20
30	19M7159	CAP SCREW	8				X	M6X15
31	Z35508	STRAP	1				X	AR
32	Z35903	HOLDER	1	006196	-		X	
33	Z35930	GUARD	1	006196	-		X	
34	21M7094	SCREW	3	006196	-		X	M6X16
35	Z26250	WASHER	3	006196	-		X	
36	AZ12004	SUPPORT	1				X	
37	24M7040	WASHER	2				X	11MM

COPYRIGHT©1994 - 2008 DEERE & COMPANY Moline, Illinois All rights reserved

(2F22) SIDE COVERS,LEFT-HAND
HABILLAGE GAUCHE
SEITENVERKLEIDUNG,LINKS
RIVESTIMENTI SINISTRI
CHAPAS DE REVESTIMIENTO,LADO IZQUIERDO
VANSTER SIDOSKYDDOR

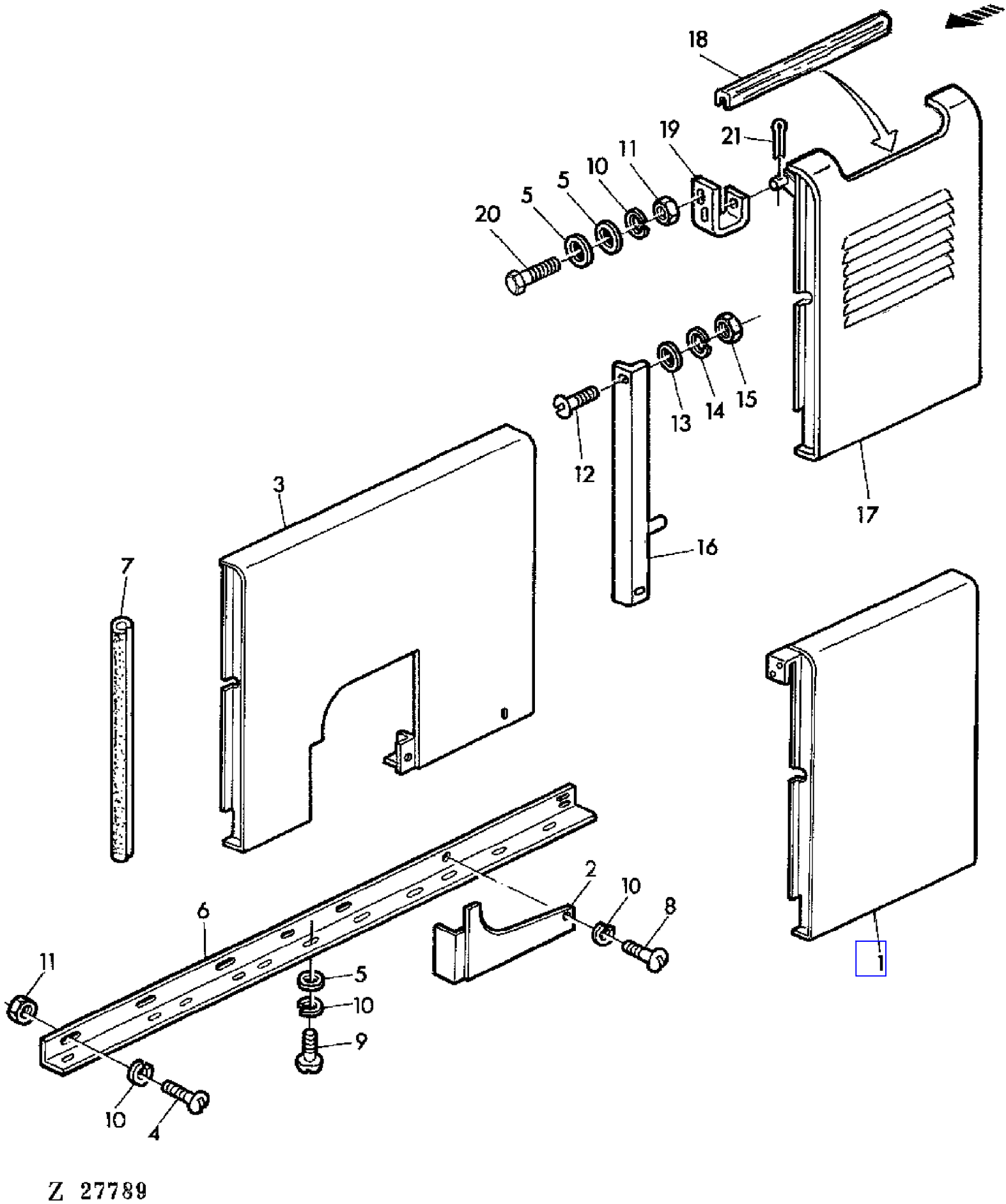

COPYRIGHT©1994 - 2008 DEERE & COMPANY Moline, Illinois All rights reserved

(2F22) SIDE COVERS,LEFT-HAND
HABILLAGE GAUCHE
SEITENVERKLEIDUNG,LINKS
RIVESTIMENTI SINISTRI
CHAPAS DE REVESTIMIENTO,LADO IZQUIERDO
VANSTER SIDOSKYDDOR

KEY	PART NO.	PART NAME	QTY	SERIAL NO.	955	REMARKS
1	AZ19758	SHIELD	1		X	
2	AZ19770	GUARD	1		X	
3	AZ21553	SHIELD	1		X	
4	21M7087	SCREW	8		X	M6X12
5	Z26250	WASHER	7		X	6,5MM
6	Z31127	BRACE	1		X	
7	Z31170	GUARD	2		X	
8	21M7083	SCREW	AR		X	M6X10
9	21M7031	SCREW	9		X	M6X15
10	12M7012	LOCK WASHER	18		X	6MM
11	14M7027	NUT	18		X	M6
12	21M7089	SCREW	2		X	M8X20
13	24M7055	WASHER	AR		X	8,4MM
14	12M7008	LOCK WASHER	AR		X	8MM
15	14M7029	NUT	AR		X	M8
16	AZ28388	SUPPORT	1		X	
17	AZ28387	PANEL	1		X	AR
18	Z31170	GUARD	1		X	AR (SUB FOR Z37778)
19	Z39058	CLEVIS	1		X	AR
20	19M7159	CAP SCREW	2		X	M6X16
21	11M7013	COTTER PIN	AR		X	3X20MM

COPYRIGHT©1994 - 2008 DEERE & COMPANY Moline, Illinois All rights reserved

(2F18) SIDE COVERS,RIGHT-HAND
HABILLAGE DROIT
SEITENVERKLEIDUNG,RECHTS
RIVESTIMENTI DESTRI
CHAPAS DE REVESTIMIENTO,LADO DERECHO
HOEGER SIDOSKYDDOR

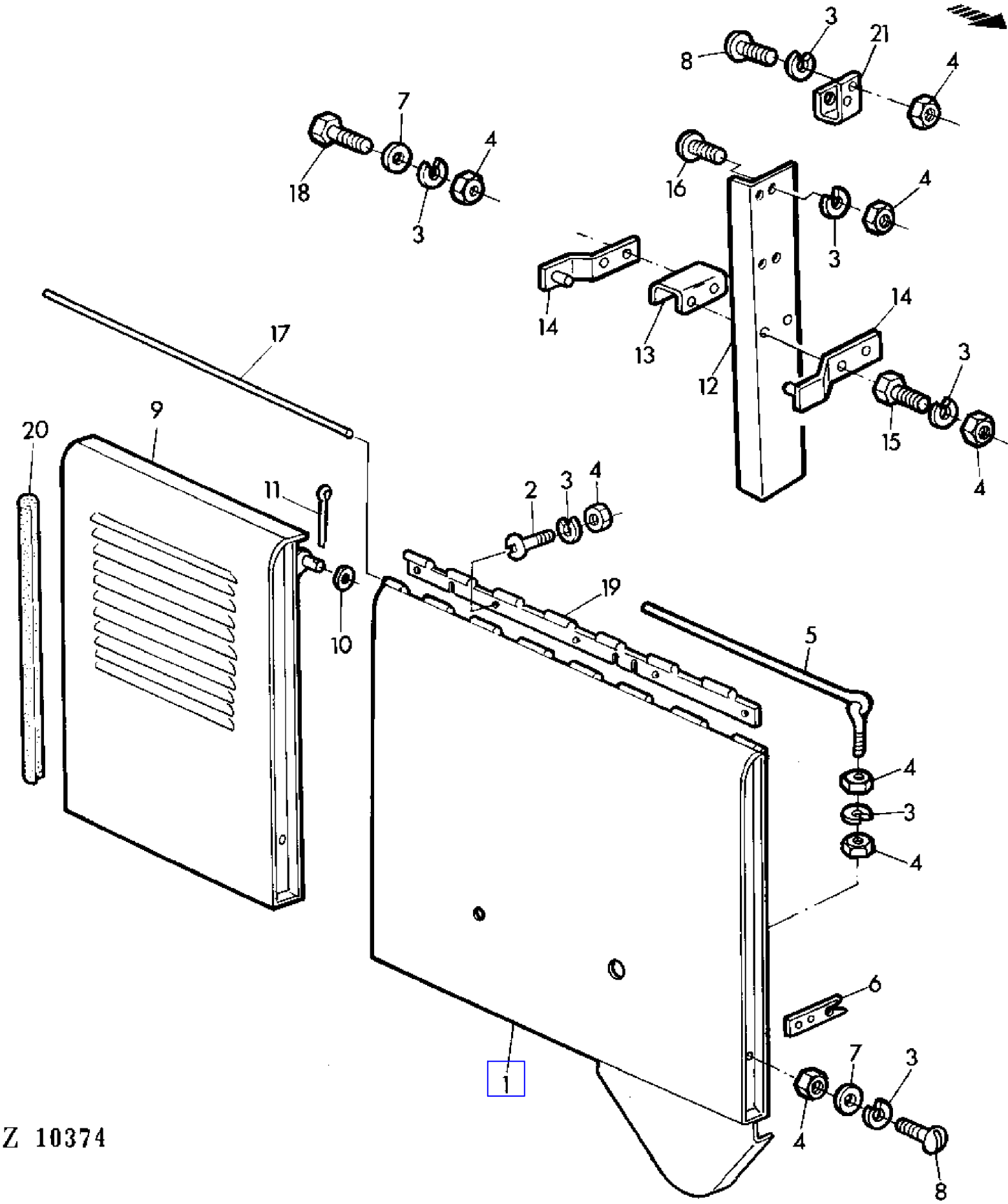

COPYRIGHT©1994 - 2008 DEERE & COMPANY Moline, Illinois All rights reserved

(2F18) SIDE COVERS,RIGHT-HAND
HABILLAGE DROIT
SEITENVERKLEIDUNG,RECHTS
RIVESTIMENTI DESTRI
CHAPAS DE REVESTIMIENTO,LADO DERECHO
HOEGER SIDOSKYDDOR

KEY	PART NO.	PART NAME	QTY	SERIAL NO.	955	REMARKS
1	AZ19760	SHIELD	1	- 003200	X	
	AZ23912	SHIELD	1	003201 -	X	
2	21M7083	SCREW	5		X	M6X10
3	12M7012	LOCK WASHER	23		X	6MM
4	14M7027	NUT	25		X	M6
5	AZ18144	ROD	2		X	
6	Z24277	HOLDER	1		X	
7	Z26250	WASHER	10		X	6,5MM
8	21M7087	SCREW	10		X	M6X12
9	AZ19757	SHIELD	1		X	
10	24M7028	WASHER	2		X	10,5MM
11	11M7013	COTTER PIN	2		X	3X20MM
12	Z31129	ANGLE	1		X	
13	Z31564	CLEVIS	1		X	
14	AZ20257	HOLDER	2		X	
15	19M7159	CAP SCREW	2		X	M6X15
16	21M7087	SCREW	2		X	M6X12
17	Z31374	PIN	1		X	
18	19M7077	CAP SCREW	2		X	M6X20
19	Z32308	HINGE	1		X	
20	Z31170	GUARD	2		X	
21	Z32307	HOLDER	1		X	

COPYRIGHT©1994 - 2008 DEERE & COMPANY Moline, Illinois All rights reserved

(PC4146) 955 Combine

(3B20) SIDE PANEL,LEFT-HAND
CADRE LATERAL GAUCHE
SEITENWAND LINKS
FIANCATA SINISTRA
PANEL LATERAL IZQUIERDO
VANSTER SIDOVAGG

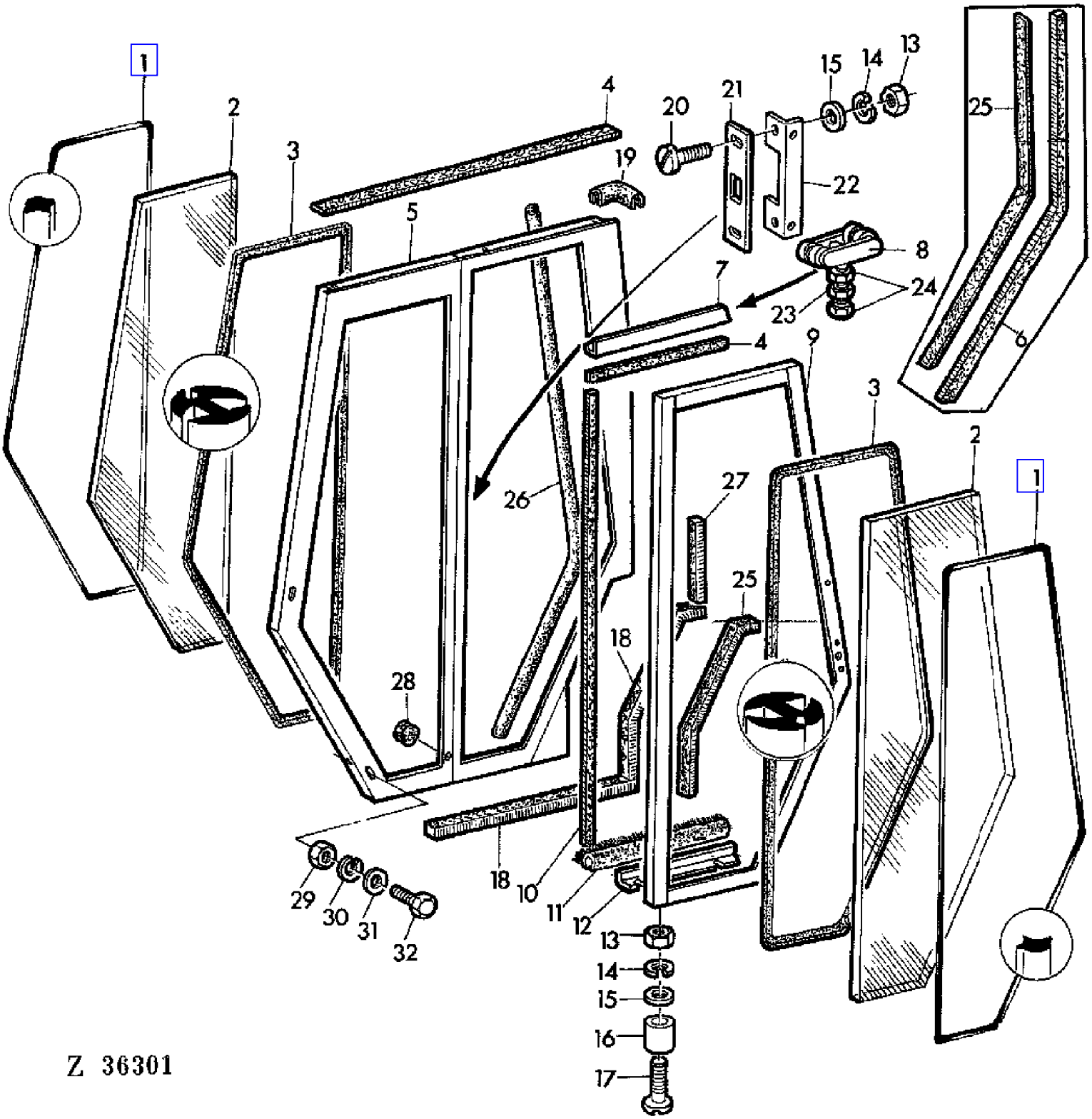

COPYRIGHT©1994 - 2008 DEERE & COMPANY Moline, Illinois All rights reserved

(3B20) SIDE PANEL,LEFT-HAND
CADRE LATERAL GAUCHE
SEITENWAND LINKS
FIANCATA SINISTRA
PANEL LATERAL IZQUIERDO
VANSTER SIDOVAGG

KEY	PART NO.	PART NAME	QTY	SERIAL NO.	955	REMARKS
1	CA19405	WEATHERSTRIP	2		X	LGTH = 4430 MM
2	CA19415	WINDOWPANE	2		X	
	CA23646	WINDOWPANE	2		X	(A)
3	CA19404	GASKET	2		X	LGTH = 4430 MM
4	CA19606	WEATHERSTRIP	1		X	LGTH = 5600 MM 30X6MM
5	DA22891	FRAME	1		X	(ORD W/ CA19976) (SUB FOR DA19328, DA20302)
6	CA19885	WEATHERSTRIP	1	- XXXX	X	LGTH = 1810 MM 20X6MM
7	CA19377	HANGER	1		X	
8	DA19432	ROLLER	2		X	
9	DA19365	FRAME	1		X	
10	CA19976	SEAL	1		X	LGTH = 1820 MM
11	CA19609	BRUSH	1		X	LGTH = 445 MM
12	CA19379	ANGLE	1		X	
13	14M7027	NUT	8		X	M6
14	12M7012	LOCK WASHER	8		X	6MM
15	24M7088	WASHER	6		X	6,6MM
16	CA19395	BUSHING	2		X	
17	21M7221	BOLT	2		X	M6X40
18	CA19554	WEATHERSTRIP	1		X	LGTH = 2950 MM 25X25MM
19	CA19903	GASKET	1		X	LGTH = 230 MM
20	21M7031	SCREW	8		X	M6X15
21	CA19421	LATCH	2		X	
22	CA19902	PLATE	1		X	
23	14M7029	NUT	4		X	M8
24	14M7203	NUT	4		X	M8
25	CA19420	WEATHERSTRIP	1	- XXXX	X	LGTH = 1850 MM 20X6MM
26	CA19976	SEAL	1	XXXX -	X	
27	CA19500	WEATHERSTRIP	1		X	LGTH = 1360 MM 30X30MM
28	Z21238	GROMMET	AR		X	
29	14M7140	NUT	2		X	M10
30	12M7013	LOCK WASHER	2		X	10MM
31	24M7040	WASHER	2		X	11MM
32	19M7179	CAP SCREW	2		X	M10X50

(A) TINTED GLASS
VERRE TEINTE
GETOENTES GLAS
CRISTALLO TINTEGGIATO
CRISTAL TINTURADO
FARGAD RUTOR

COPYRIGHT©1994 - 2008 DEERE & COMPANY Moline, Illinois All rights reserved

(PC4146) 955 Combine

(3B16) SIDE PANEL,RIGHT-HAND
CADRE LATERAL DROIT
SEITENWAND RECHTS
FIANCATA DESTRA
PANEL LATERAL DERECHO
HOEGER SIDOVAEGG

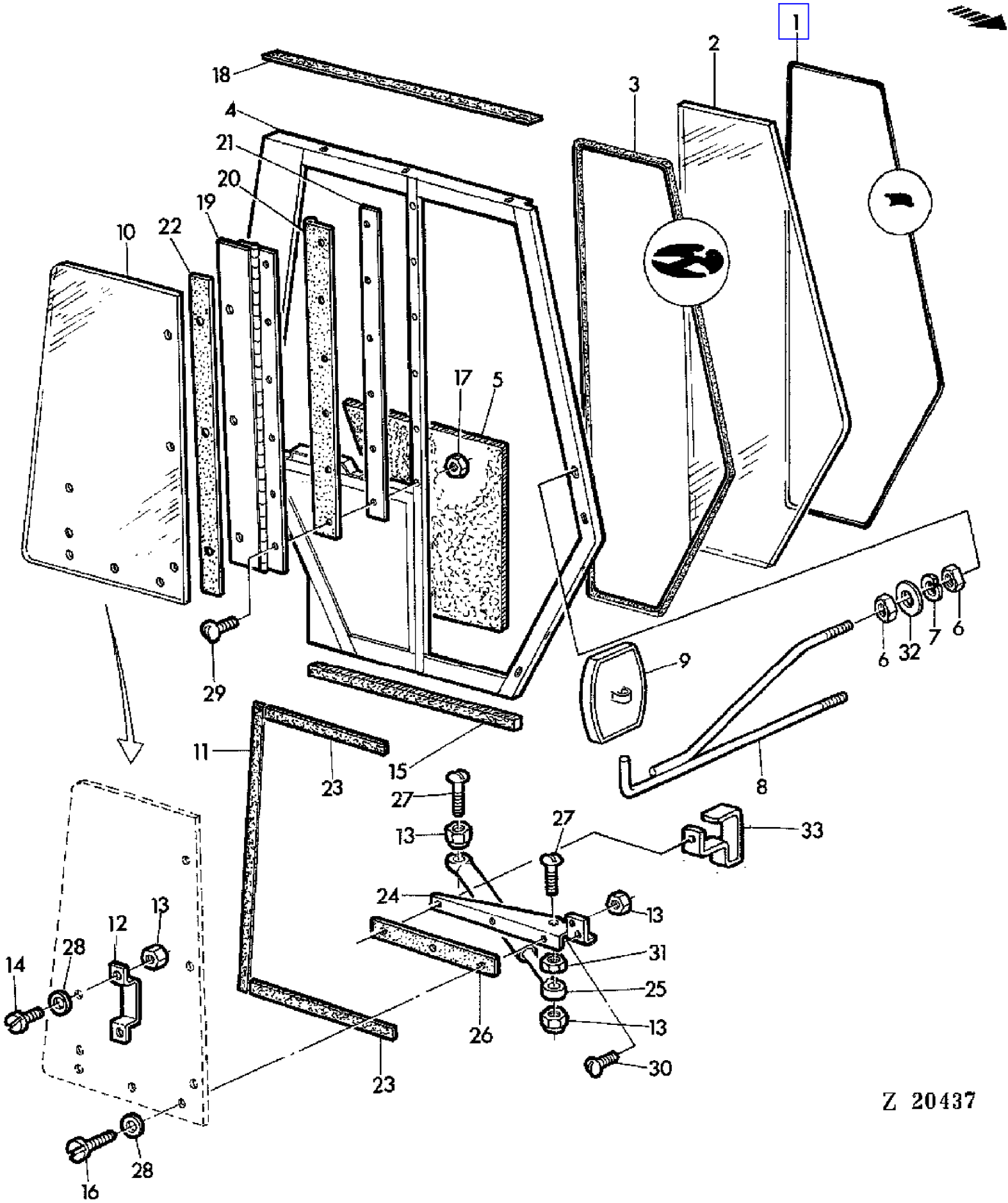

COPYRIGHT©1994 - 2008 DEERE & COMPANY Moline, Illinois All rights reserved

(3B16) SIDE PANEL,RIGHT-HAND
CADRE LATERAL DROIT
SEITENWAND RECHTS
FIANCATA DESTRA
PANEL LATERAL DERECHO
HOEGER SIDOVAEGG

KEY	PART NO.	PART NAME	QTY	SERIAL NO.	955	REMARKS
1	CA19405	WEATHERSTRIP	1		X	LGTH = 4330 MM
2	CA19415	WINDOWPANE	1		X	
	CA23646	WINDOWPANE	1		X	(A)
3	CA19404	GASKET	1		X	LGTH = 4330 MM
4	DA22892	FRAME	1		X	(ORD W/ CA19980) (SUB FOR DA19329, DA20303)
5	CA19430	BARRIER	1		X	
6	14M7031	NUT	4		X	M12
7	12M7014	LOCK WASHER	2		X	12MM
8	DA19635	HOLDER	1		X	
9	AZ16499	REAR VIEW MIRROR	1		X	
10	CA19423	WINDOWPANE	1		X	
	CA23647	WINDOWPANE	1		X	(A)
11	CA19420	WEATHERSTRIP	1		X	LGTH = 1820 MM 20X6MM
12	DA19603	GRIP	1		X	
13	14M7165	LOCK NUT	1		X	M6
14	CA19604	BOLT	3		X	
15	CA19554	WEATHERSTRIP	1		X	LGTH = 2950 MM 25X25MM
16	CA19605	BOLT	5		X	
17	14M7139	NUT	AR		X	M4
18	CA19606	WEATHERSTRIP	1		X	LGTH = 4700 MM 30X6MM
19	DA19391	HINGE	1		X	
20	CA19424	WEATHERSTRIP	1		X	
21	CA19380	REINFORCEMENT	1		X	
22	CA19646	WEATHERSTRIP	1		X	
23	CA19553	WEATHERSTRIP	1		X	LGTH = 1240 MM 20X8MM
24	CA19640	HOLDER	1		X	
25	AZ29157	DASHPOT	1		X	(SUB FOR CA19429, CA19979)
26	CA19645	WEATHERSTRIP	1		X	
27	21M7159	SCREW	AR		X	M6X25
28	CA19649	WASHER	9		X	
29	21M7033	SCREW	AR		X	M4X16
30	21M7031	SCREW	AR		X	M6X15
31	14M7027	NUT	AR		X	M6
32	24M7038	WASHER	2		X	14MM
33	CA22346	LATCH	1		X	

(A) TINTED GLASS
VERRE TEINTE
GETOENTES GLAS
CRISTALLO TINTEGGIATO
CRISTAL TINTURADO
FARGAD RUTOR

COPYRIGHT©1994 - 2008 DEERE & COMPANY Moline, Illinois All rights reserved

(3B18) SIDE PANEL,RIGHT-HAND
CADRE LATERAL DROIT
SEITENWAND RECHTS
FIANCATA DESTRA
PANEL LATERAL DERECHO
HOEGER SIDOVAEGG

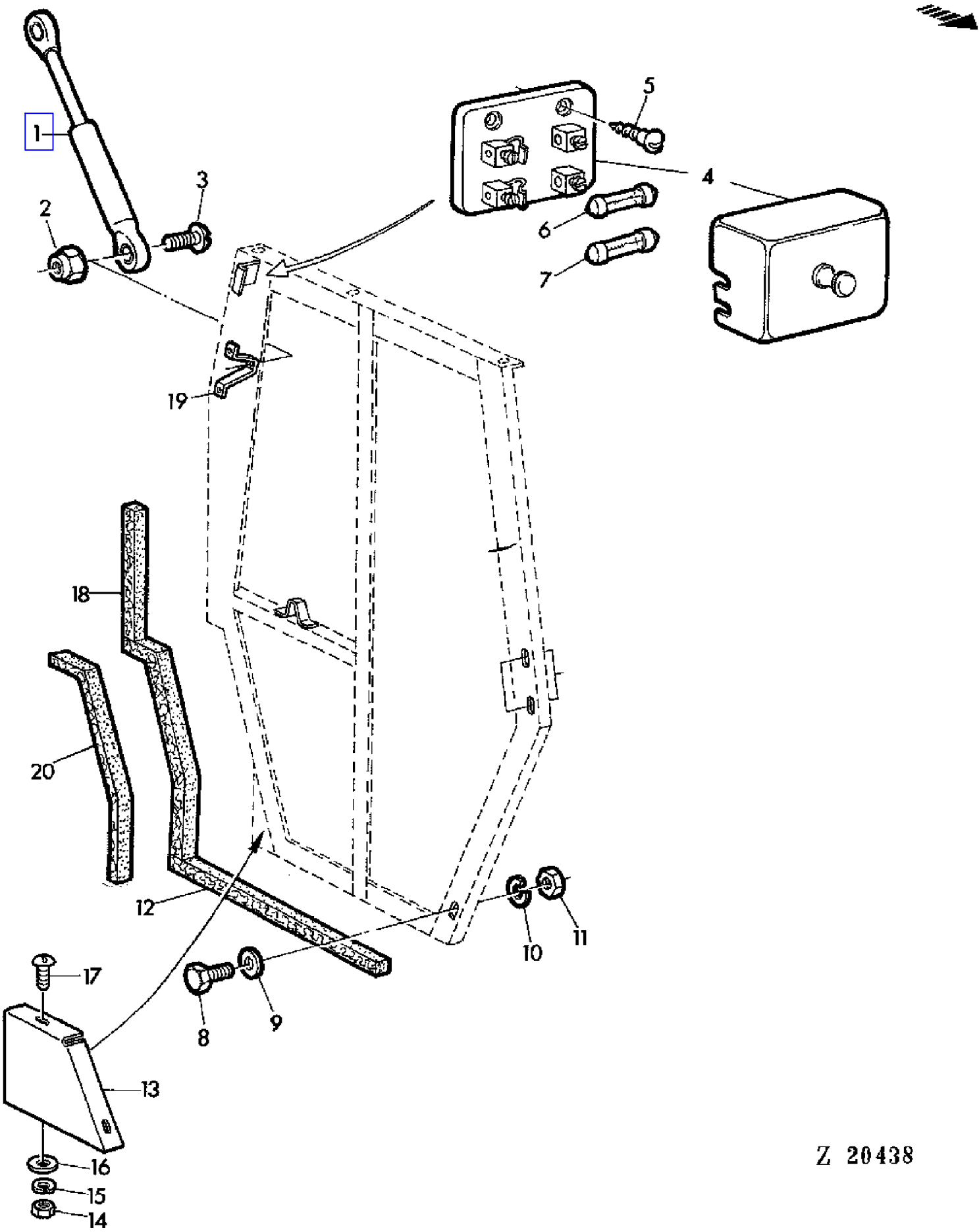

COPYRIGHT©1994 - 2008 DEERE & COMPANY Moline, Illinois All rights reserved

(3B18) SIDE PANEL,RIGHT-HAND
CADRE LATERAL DROIT
SEITENWAND RECHTS
FIANCATA DESTRA
PANEL LATERAL DERECHO
HOEGER SIDOVAEGG

KEY	PART NO.	PART NAME	QTY	CAB SERIAL NO.	955	REMARKS
1	AZ29157	DASHPOT	1		X	(SUB FOR CA19429, CA19979)
2	14M7165	LOCK NUT	1		X	M6
3	21M7159	SCREW	1		X	M6X25
4	DA19633	FUSE BOX	1		X	
5	37M7020	SCREW	2		X	4,2X13MM
6	CA19681	FUSE	1		X	16A
7	99M7048	FUSE	1		X	8A (SUB FOR CA13048)
8	19M7179	CAP SCREW	AR		X	M10X50
9	24M7040	WASHER	AR		X	11MM
10	12M7013	LOCK WASHER	AR		X	10MM
11	14M7140	NUT	AR		X	M10
12	CA19554	WEATHERSTRIP	1		X	LGTH = 2950 MM 25X25MM
13	CA19611	SHEET	1		X	
14	14M7027	NUT	2		X	M6
15	12M7012	LOCK WASHER	2		X	
16	24M7088	WASHER	2		X	6,6MM
17	21M7031	SCREW	2		X	M6X15
18	CA19500	WEATHERSTRIP	1		X	LGTH = 1360 MM 30X30MM
19	CA19980	RETAINER	1	000501 -	X	
20	CA22369	WEATHERSTRIP	AR		X	AR, LGTH = 1500 MM 6X20MM

COPYRIGHT©1994 - 2008 DEERE & COMPANY Moline, Illinois All rights reserved

(PC4146) 955 Combine

(2F02) SIDE PANELS,LEFT-HAND
PANNEAU LATERAL GAUCHE
SEITENWAND LINKS
FIANCATA SINISTRA
PANEL LATERAL IZQUIERDO
VANSTER SIDOVAGG

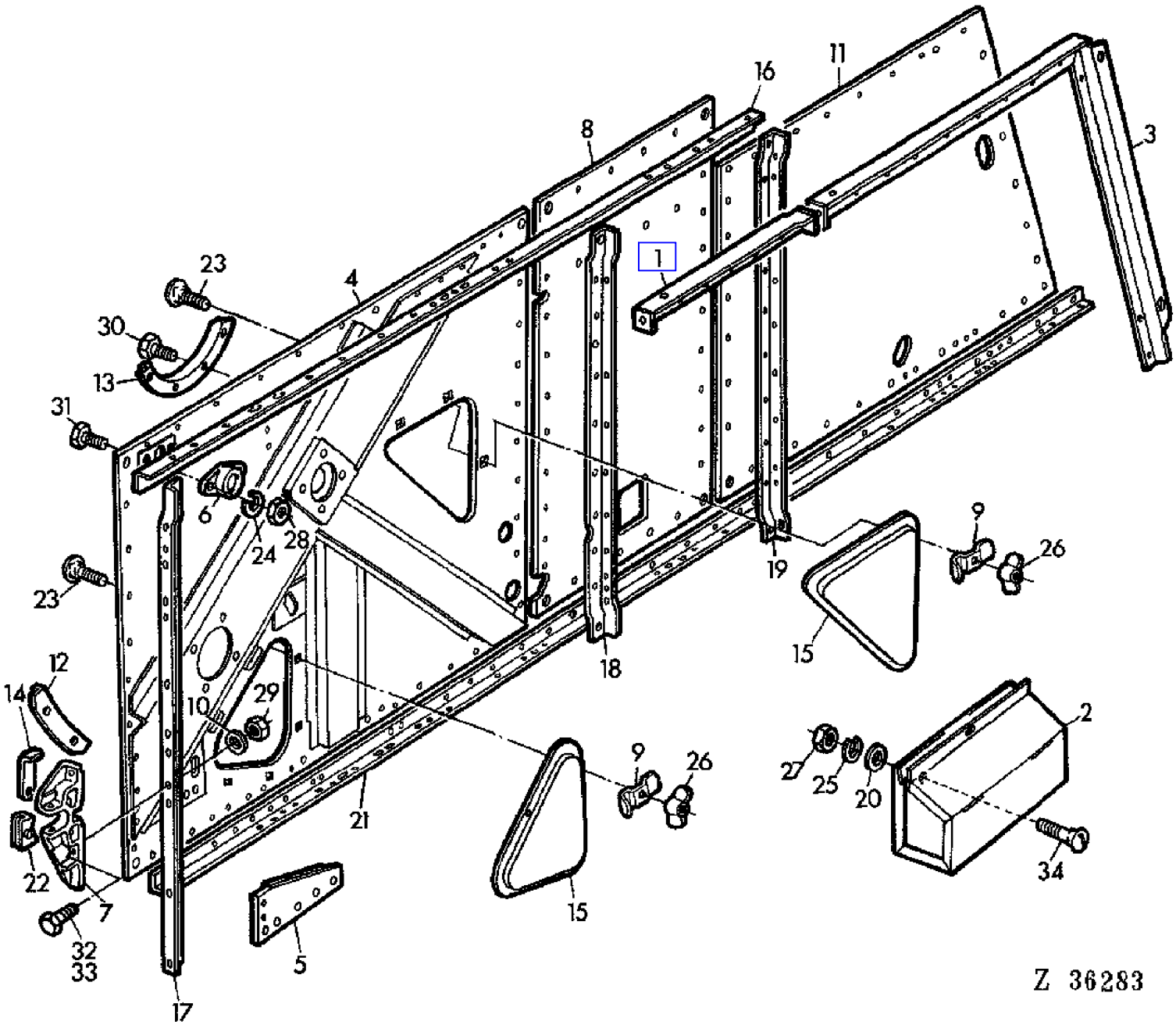

COPYRIGHT©1994 - 2008 DEERE & COMPANY Moline, Illinois All rights reserved

(2F02) SIDE PANELS,LEFT-HAND
PANNEAU LATERAL GAUCHE
SEITENWAND LINKS
FIANCATA SINISTRA
PANEL LATERAL IZQUIERDO
VANSTER SIDOVAGG

KEY	PART NO.	PART NAME	QTY	SERIAL NO.	955	REMARKS
1	AZ10470	FRAME	1		X	
2	AZ37936	TOOLBOX	1		X	(SUB FOR AZ12220)
3	AZ18437	FRAME	1		X	
4	AZ23122	SIDE WALL	1		X	
5	AZ21452	STRAP	1		X	
6	Z10994	BEARING	1		X	(SUB FOR Z10113)
7	Z10813	HANGER	1		X	
8	Z33832	SIDE WALL	1		X	
9	Z20367	CLAMP	7		X	
10	24M7053	WASHER	4		X	17MM
11	Z33839	SIDE WALL	1		X	
12	Z20912	DEFLECTOR	1		X	
13	Z20913	STRIPPER	1		X	
14	Z20916	LATCH	1		X	
15	Z20917	COVER	2		X	
16	Z20922	ANGLE	1		X	
17	Z43080	BRACE	1		X	(SUB FOR Z32597)
18	Z33807	ANGLE	1		X	
19	Z33842	ANGLE	1		X	
20	24M7088	WASHER	2		X	6,6MM
21	Z31743	ANGLE	1		X	
22	H10835	RETAINER	1		X	
23	03M7054	BOLT	8		X	M8X20
24	12M7008	LOCK WASHER	10		X	8MM
25	12M7012	LOCK WASHER	8		X	6MM
26	14M7020	WING NUT	10		X	M8
27	14M7027	NUT	2		X	M6
28	14M7029	NUT	10		X	M8
29	14M7170	LOCK NUT	4		X	M16
30	19M7159	CAP SCREW	4		X	M6X15
31	19M7163	CAP SCREW	2		X	M8X25
32	19M7369	CAP SCREW	1		X	M16X60
33	19M7409	CAP SCREW	3		X	M16X50
34	21M7087	SCREW	2		X	M6X12
..	AZ21450	SIDE WALL	1		X	ASSY, INCL KEYS 1,3,4,5,8,11,16-19,21

COPYRIGHT©1994 - 2008 DEERE & COMPANY Moline, Illinois All rights reserved

(2E24) SIDE PANELS,RIGHT-HAND
PANNEAU LATERAL DROIT
SEITENWAND RECHTS
FIANCATA DESTRA
PANEL LATERAL DERECHO
HOGER SIDOVAGG

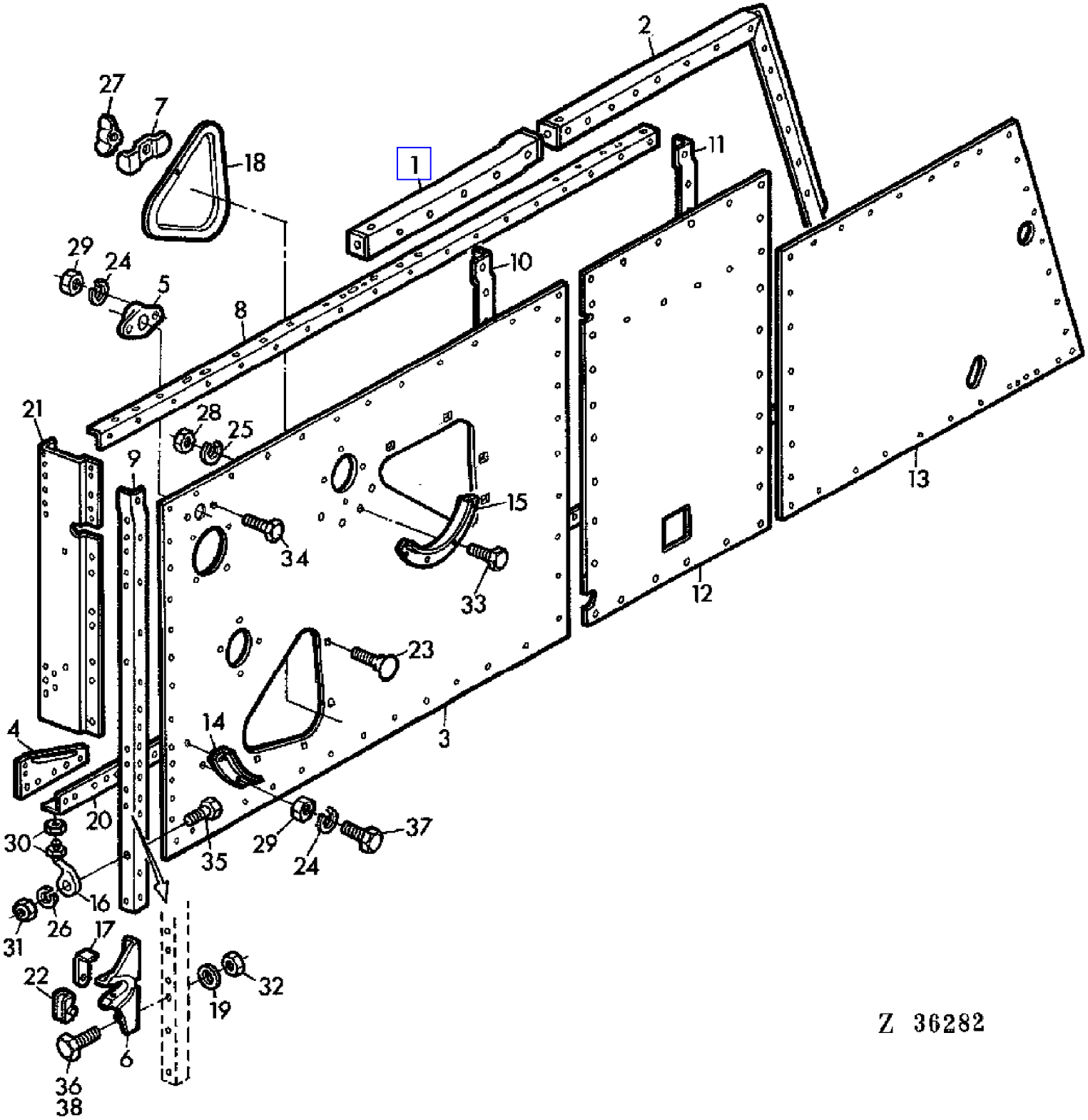

COPYRIGHT©1994 - 2008 DEERE & COMPANY Moline, Illinois All rights reserved

(2E24) SIDE PANELS,RIGHT-HAND
PANNEAU LATERAL DROIT
SEITENWAND RECHTS
FIANCATA DESTRA
PANEL LATERAL DERECHO
HOGER SIDOVAGG

KEY	PART NO.	PART NAME	QTY	SERIAL NO.	955	REMARKS
1	AZ23101	FRAME	1		X	
2	AZ18440	FRAME	1		X	
3	AZ23123	SIDE WALL	1	- 011231	X	
	AZ25605	SIDE WALL	1	011232 -	X	
4	AZ21453	STRAP	1		X	
5	Z10994	BEARING	1		X	(SUB FOR Z10113)
6	Z10814	HANGER	1		X	
7	Z20367	CLAMP	7		X	
8	Z20877	ANGLE	1		X	
9	Z32598	ANGLE	1		X	
10	Z33808	ANGLE	1		X	
11	Z33841	ANGLE	1		X	
12	Z33832	SIDE WALL	1		X	
13	Z33839	SIDE WALL	1		X	
14	Z20912	DEFLECTOR	1		X	
15	Z20913	STRIPPER	1		X	
16	Z20915	BRACKET	1		X	
17	Z20916	LATCH	1		X	
18	Z20917	COVER	2		X	
19	24M7053	WASHER	4		X	17MM
20	Z31742	ANGLE	1		X	
21	Z32603	REINFORCEMENT	1		X	
22	H10835	RETAINER	1		X	
23	03M7054	BOLT	4		X	M8X20
24	12M7008	LOCK WASHER	8		X	8MM
25	12M7012	LOCK WASHER	4		X	6MM
26	12M7013	LOCK WASHER	1		X	10MM
27	14M7020	WING NUT	4		X	M8
28	14M7027	NUT	4		X	M6
29	14M7029	NUT	8		X	M8
30	14M7031	NUT	2		X	M12
31	14M7140	NUT	1		X	M10
32	14M7170	LOCK NUT	4		X	M16
33	19M7159	CAP SCREW	4		X	M6X15
34	19M7163	CAP SCREW	2		X	M8X25
35	19M7169	CAP SCREW	1		X	M10X35
36	19M7369	CAP SCREW	1		X	M16X60
37	19M7297	CAP SCREW	2		X	M8X12
38	19M7409	CAP SCREW	3		X	M16X50
..	AZ21451	SIDE WALL	1		X	ASSY, INCL KEYS 1-4,8-13,20

COPYRIGHT©1994 - 2008 DEERE & COMPANY Moline, Illinois All rights reserved

(4F02) SIDE PARTS-LARGE GRAIN TANK EXTENSION
COTES DE GRANDE REHAUSSE DE TREMIE
SEITENTEILE GROSSER KORNTANKAUFSATZ
FIANCATE DELLA ESTENSIONE GRANDE SERBATOIO GRANO
CHAPAS LATERALES DE LA EXTENSION GRANDE DEL TANQUE DE GRANO
SIDODELAR FOER STOR SPANNMALSTANKENS FOERHOEJNING

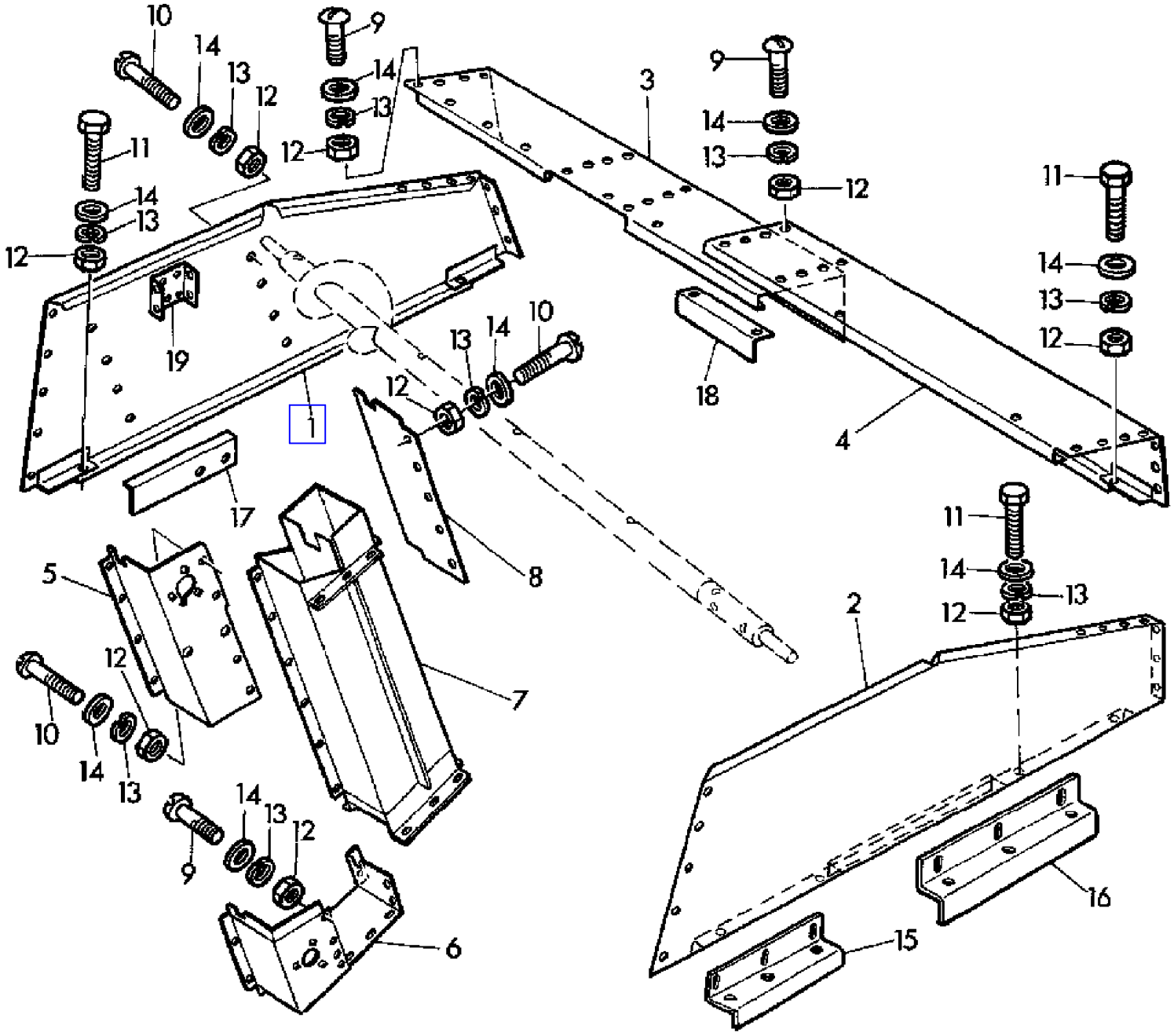

Z 61916

COPYRIGHT©1994 - 2008 DEERE & COMPANY Moline, Illinois All rights reserved

(4F02) SIDE PARTS-LARGE GRAIN TANK EXTENSION
COTES DE GRANDE REHAUSSE DE TREMIE
SEITENTEILE GROSSER KORNTANKAUFSATZ
FIANCATE DELLA ESTENSIONE GRANDE SERBATOIO GRANO
CHAPAS LATERALES DE LA EXTENSION GRANDE DEL TANQUE DE GRANO
SIDODELAR FOER STOR SPANNMALSTANKENS FOERHOEJNING

KEY	PART NO.	PART NAME	QTY	SERIAL NO.	955	REMARKS
1	AZ19582	SIDE WALL	1		X	RH
2	AZ21578	SIDE WALL	1		X	LH
3	AZ17188	PANEL	1		X	REAR, RH
4	AZ17187	PANEL	1		X	REAR, LH
5	AZ17194	BRACKET	1		X	
6	AZ17193	BRACKET	1		X	
7	AZ17197	ELEVATOR	1		X	
8	Z28536	SHEET	1		X	
9	21M7031	SCREW	18		X	M6X15
10	21M7085	SCREW	15		X	M6X20
11	19M7077	CAP SCREW	9		X	M6X20
12	14M7027	NUT	42		X	M6
13	12M7012	LOCK WASHER	42		X	6MM
14	24M7088	WASHER	42		X	6,6MM
15	Z32421	REINFORCEMENT	AR		X	
16	Z28518	REINFORCEMENT	AR		X	
17	Z33574	ANGLE	AR		X	
18	Z33575	ANGLE	AR		X	
19	Z28524	HOLDER	1		X	

COPYRIGHT©1994 - 2008 DEERE & COMPANY Moline, Illinois All rights reserved

(2B04) SINGLE SPOOL CONTROL VALVE
DISTRIBUTEUR UNE VOIE
STEUERGERAET-EINFACH
DISTRIBUTORE SEMPLICE
VALVULA DE MANDO SIMPLE
MANOVERVENTIL-ENKELVERKAND

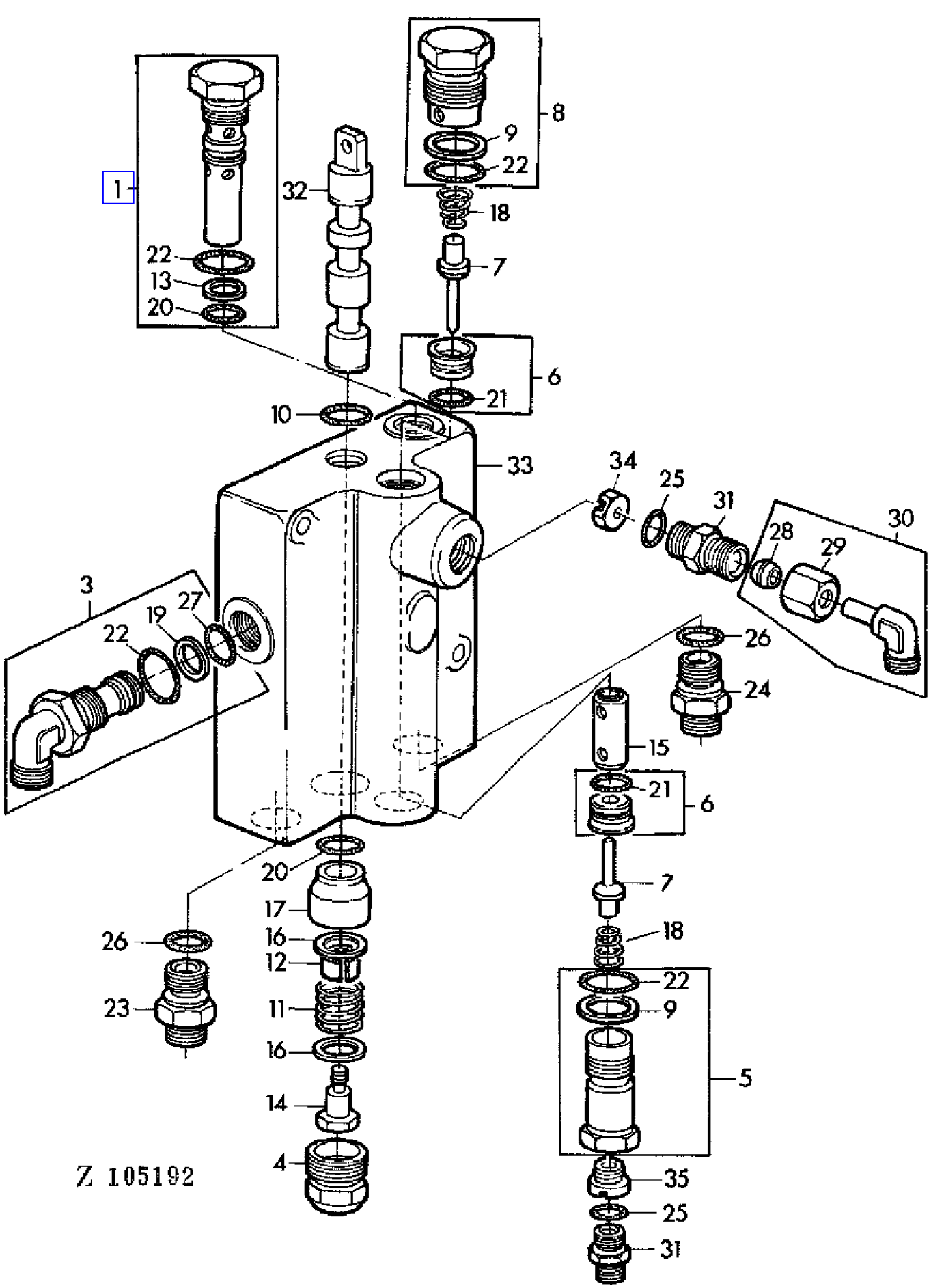

COPYRIGHT©1994 - 2008 DEERE & COMPANY Moline, Illinois All rights reserved

(2B04) SINGLE SPOOL CONTROL VALVE
DISTRIBUTEUR UNE VOIE
STEUERGERAET-EINFACH
DISTRIBUTORE SEMPLICE
VALVULA DE MANDO SIMPLE
MANOVERVENTIL-ENKELVERKAND

KEY	PART NO.	PART NAME	QTY	SERIAL NO.	955	REMARKS
1	AZ19272	RELIEF VALVE	1		X	
2	AZ19373	CONTROL VALVE	1		X	(ORD AZ30319)
3	AZ19488	ELBOW FITTING	1		X	
4	AH78788	PLUG	1		X	
5	AH78789	FITTING	1		X	
6	AH20823	VALVE SEAT INSERT	2		X	
7	AN30940	POPPET	2		X	
8	AN110775	FITTING	1		X	
9	H35230	BACK-UP RING	1		X	
10	H36256	O-RING	1		X	
11	H60819	SPRING	1		X	
12	H62801	BUSHING	1		X	
13	H63357	BACK-UP RING	1		X	
14	H63987	CAP SCREW	1		X	
15	N31766	PLUNGER	1		X	
16	N31767	WASHER	2		X	
17	N111488	BUSHING	1		X	
18	N111493	SPRING	2		X	
19	N140001	BACK-UP RING	1		X	
20	R375R	O-RING	1		X	
21	R459R	O-RING	2		X	
22	T13119	O-RING	4		X	
23	Z32967	FITTING	1		X	
24	Z32966	FITTING	1		X	
25	R26448	O-RING	2		X	
26	R26375	O-RING	2		X	
27	R27166	O-RING	1		X	(SUB FOR Z29304)
28	Z32996	SLEEVE FITTING	1		X	
29	Z32976	TUBE NUT	1		X	
30	AZ21973	ELBOW FITTING	1		X	
31	Z32963	FITTING	2		X	
32	.....	SPOOL VALVE	1		X	(ORD AZ30319)
33	.....	HOUSING	1		X	(ORD AZ30319)
34	Z44133	RESTRICTOR	1		X	ID = 1,000 MM (SUB FOR Z32157)
35	Z32156	ORIFICE	1		X	ID = 0,800 MM
..	AZ22654	TUNE-UP KIT	1		X	KIT, INCL KEYS 7,9,10,13,19-22,27

COPYRIGHT©1994 - 2008 DEERE & COMPANY Moline, Illinois All rights reserved

(2B06) SINGLE SPOOL CONTROL VALVE
DISTRIBUTEUR UNE VOIE
STEUERGERAET-EINFACH
DISTRIBUTORE SEMPLICE
VALVULA DE MANDO SIMPLE
MANOVERVENTIL-ENKELVERKAND

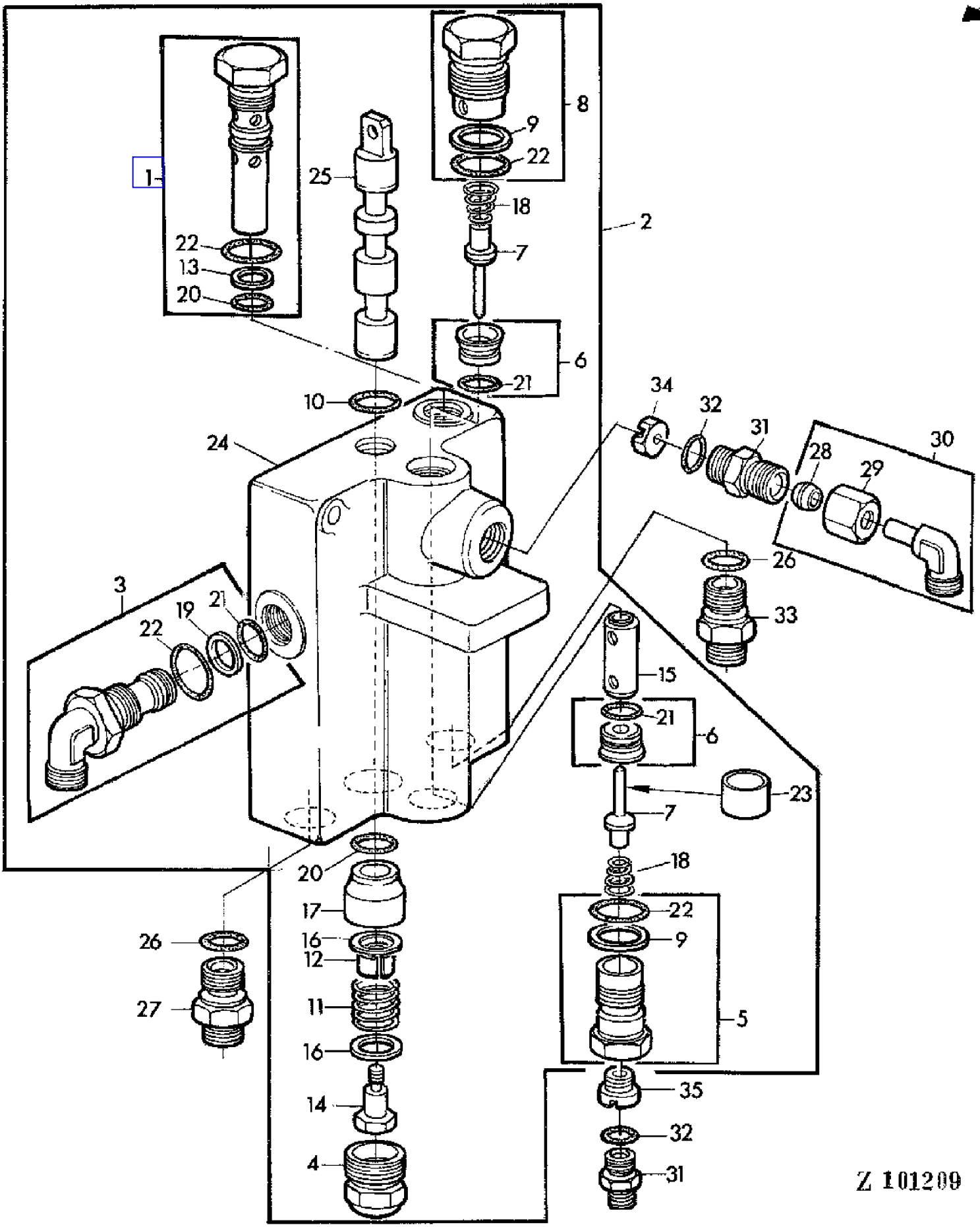

COPYRIGHT©1994 - 2008 DEERE & COMPANY Moline, Illinois All rights reserved

(2B06) SINGLE SPOOL CONTROL VALVE
DISTRIBUTEUR UNE VOIE
STEUERGERAET-EINFACH
DISTRIBUTORE SEMPLICE
VALVULA DE MANDO SIMPLE
MANOVERVENTIL-ENKELVERKAND

KEY	PART NO.	PART NAME	QTY	SERIAL NO.	955	REMARKS
1	AZ19272	RELIEF VALVE	1		X	
2	AZ30319	CONTROL VALVE	1		X	(SUB FOR AZ24477)
3	AZ19488	ELBOW FITTING	1		X	
4	AH78788	PLUG	1		X	
5	AZ22925	FITTING	1		X	
6	AZ17996	VALVE SEAT INSERT	2		X	
7	AN30940	POPPET	2		X	
8	AH64080	FITTING	1		X	
9	H35230	BACK-UP RING	2		X	
10	H36256	O-RING	1		X	
11	H60819	SPRING	1		X	
12	H62801	BUSHING	1		X	
13	H63357	BACK-UP RING	1		X	
14	H63987	CAP SCREW	1		X	
15	N31766	PLUNGER	1		X	
16	N31767	WASHER	2		X	
17	N111488	BUSHING	1		X	
18	N31765	SPRING	2		X	
19	N140001	BACK-UP RING	1		X	
20	R375R	O-RING	3		X	
21	R27166	O-RING	3		X	(SUB FOR Z29304)
22	T13119	O-RING	3		X	
23	Z30561	SPACER	1		X	
24	.....	HOUSING	1		X	(ORD AZ30319)
25	.....	SPOOL VALVE	1		X	(ORD AZ30319)
26	R26375	O-RING	2		X	
27	Z32967	FITTING	1		X	
28	Z32996	SLEEVE FITTING	1		X	
29	Z32976	TUBE NUT	1		X	
30	AZ21973	ELBOW FITTING	1		X	
31	Z32963	FITTING	2		X	
32	R26448	O-RING	2		X	
33	Z32966	FITTING	1		X	
34	Z44133	RESTRICTOR	1		X	ID = 1 MM (SUB FOR Z32157)
35	Z32156	ORIFICE	1		X	ID = 0,800 MM
..	AZ22654	TUNE-UP KIT	1		X	KIT, INCL KEYS 7,9,10,13,19-23

COPYRIGHT©1994 - 2008 DEERE & COMPANY Moline, Illinois All rights reserved

(3D02) SOUND INSULATION LH SIDE,PANEL
INSONORISATION PAROI LATERALE GAUCHE
GERAEUSCHDAEMMUNG-SEITENWAND LINKS
ELEMENTI ANTIRUMORE DELLA PARETE LATERALE SINISTRA
ELEMENTOS INSONORIZANTES DE LA PARED LATERAL IZQUIERDA
LJUDISOLERINGSMATERIAL FOR VANSTER SIDSTYCKE

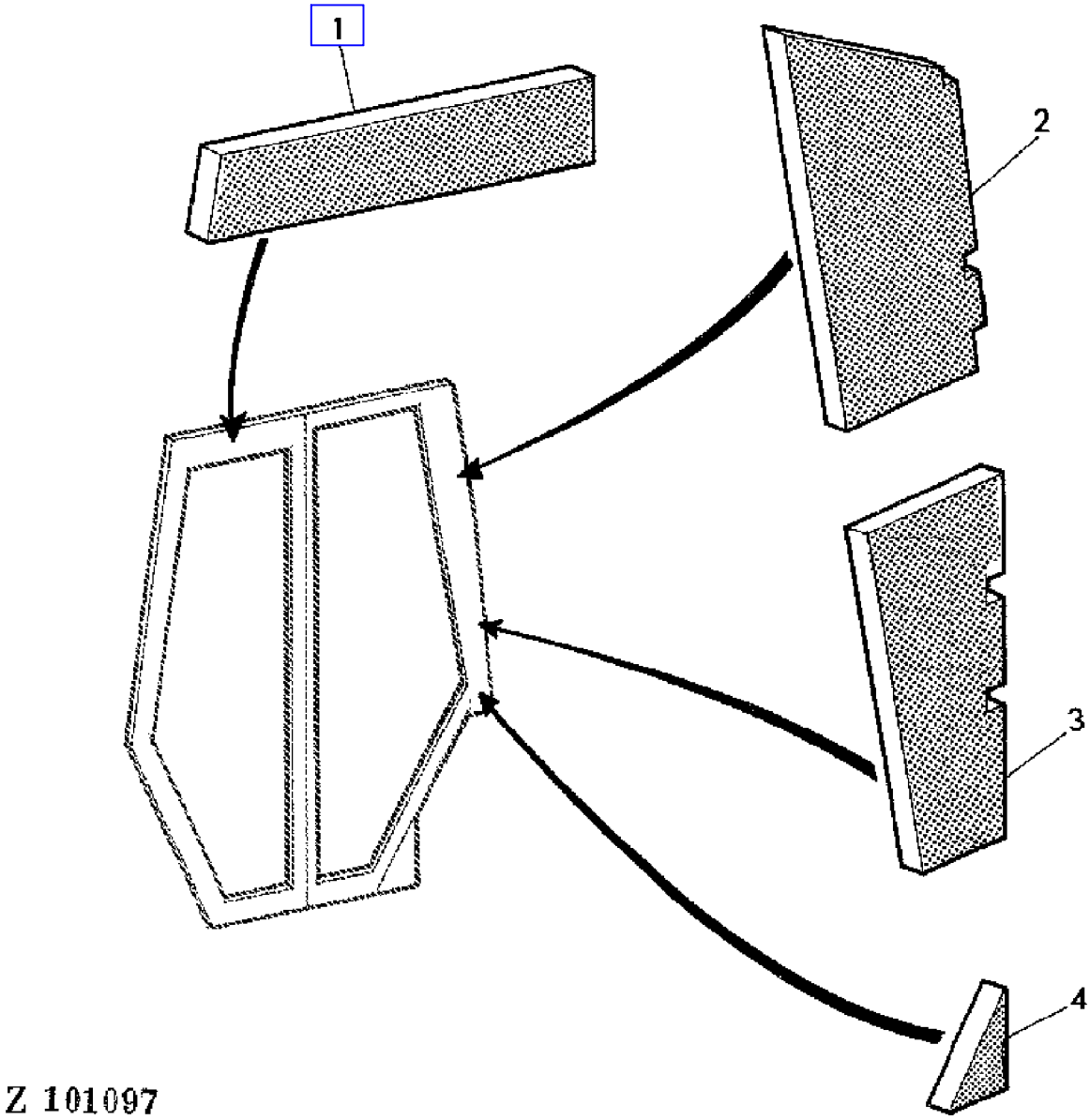

COPYRIGHT©1994 - 2008 DEERE & COMPANY Moline, Illinois All rights reserved

(3D02) SOUND INSULATION LH SIDE,PANEL
INSONORISATION PAROI LATERALE GAUCHE
GERAEUSCHDAEMMUNG-SEITENWAND LINKS
ELEMENTI ANTIRUMORE DELLA PARETE LATERALE SINISTRA
ELEMENTOS INSONORIZANTES DE LA PARED LATERAL IZQUIERDA
LJUDISOLERINGSMATERIAL FOR VANSTER SIDSTYCKE

KEY	PART NO.	PART NAME	QTY	SERIAL NO.	955	REMARKS
1	Z39540	BARRIER	1		X	AR
2	Z39535	BARRIER	1		X	AR
3	Z39534	BARRIER	1		X	AR
4	Z39547	BARRIER	1		X	AR

COPYRIGHT©1994 - 2008 DEERE & COMPANY Moline, Illinois All rights reserved

(3C22) SOUND INSULATION LW CONTROL HOUSING-OPERATOR PLATFORM
INSONORISATION BOTTIER DE COMMANDE GAUCHE
GERAEUSCHDAEMMUNG-SCHALTKASTEN LINKS
ELEMENTI ANTIRUMORE DELLA CASSA DI COMANDO SINISTRA
ELEMENTOS INSONORIZANTES DE LA CAJA DE MANDOS IZQUIERDA
LJUDISOLERINGSMATERIAL FOR VANSTER MANOVERSPAKSHUS

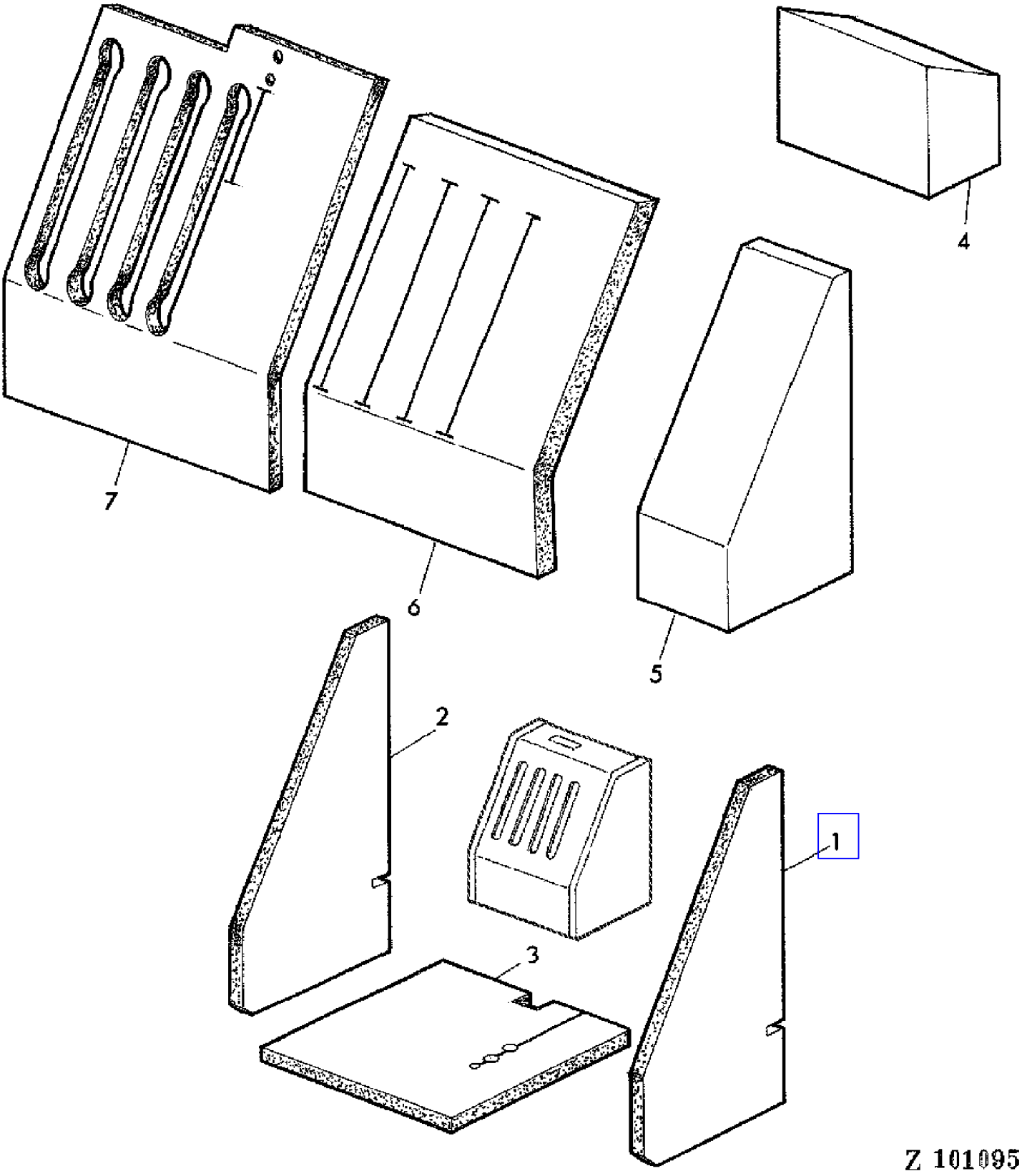

COPYRIGHT©1994 - 2008 DEERE & COMPANY Moline, Illinois All rights reserved

(3C22) SOUND INSULATION LW CONTROL HOUSING-OPERATOR PLATFORM
INSONORISATION BOTTIER DE COMMANDE GAUCHE
GERAEUSCHDAEMMUNG-SCHALTKASTEN LINKS
ELEMENTI ANTIRUMORE DELLA CASSA DI COMANDO SINISTRA
ELEMENTOS INSONORIZANTES DE LA CAJA DE MANDOS IZQUIERDA
LJUDISOLERINGSMATERIAL FOR VANSTER MANOVERSPAKSHUS

KEY	PART NO.	PART NAME	QTY	SERIAL NO.	955	REMARKS
1	Z41450	BARRIER	1		X	AR
2	Z41451	BARRIER	1		X	AR
3	Z41442	BARRIER	1		X	AR
4	Z41454	BARRIER	1		X	AR
5	Z41453	BARRIER	1		X	AR
6	Z41452	BARRIER	1		X	AR
7	Z39499	BARRIER	1		X	AR

COPYRIGHT©1994 - 2008 DEERE & COMPANY Moline, Illinois All rights reserved

(3C20) SOUND INSULATION RH CONTROL HOUSING II-OPERATOR PLATFORM
INSONORISATION BOTTIER DE COMMANDE DROIT II
GERAEUSCHDAEMMUNG-SCHALTKASTEN RECHTS II
ELEMENTI ANTIRUMORE DELLA CASSA DI COMANDO DESTRA II
ELEMENTOS INSONORIZANTES DE LA CAJA DE MANDOS DERECHA II
LJUDISOLERINGSMATERIAL FOR MANOVERSPAKSHUS II

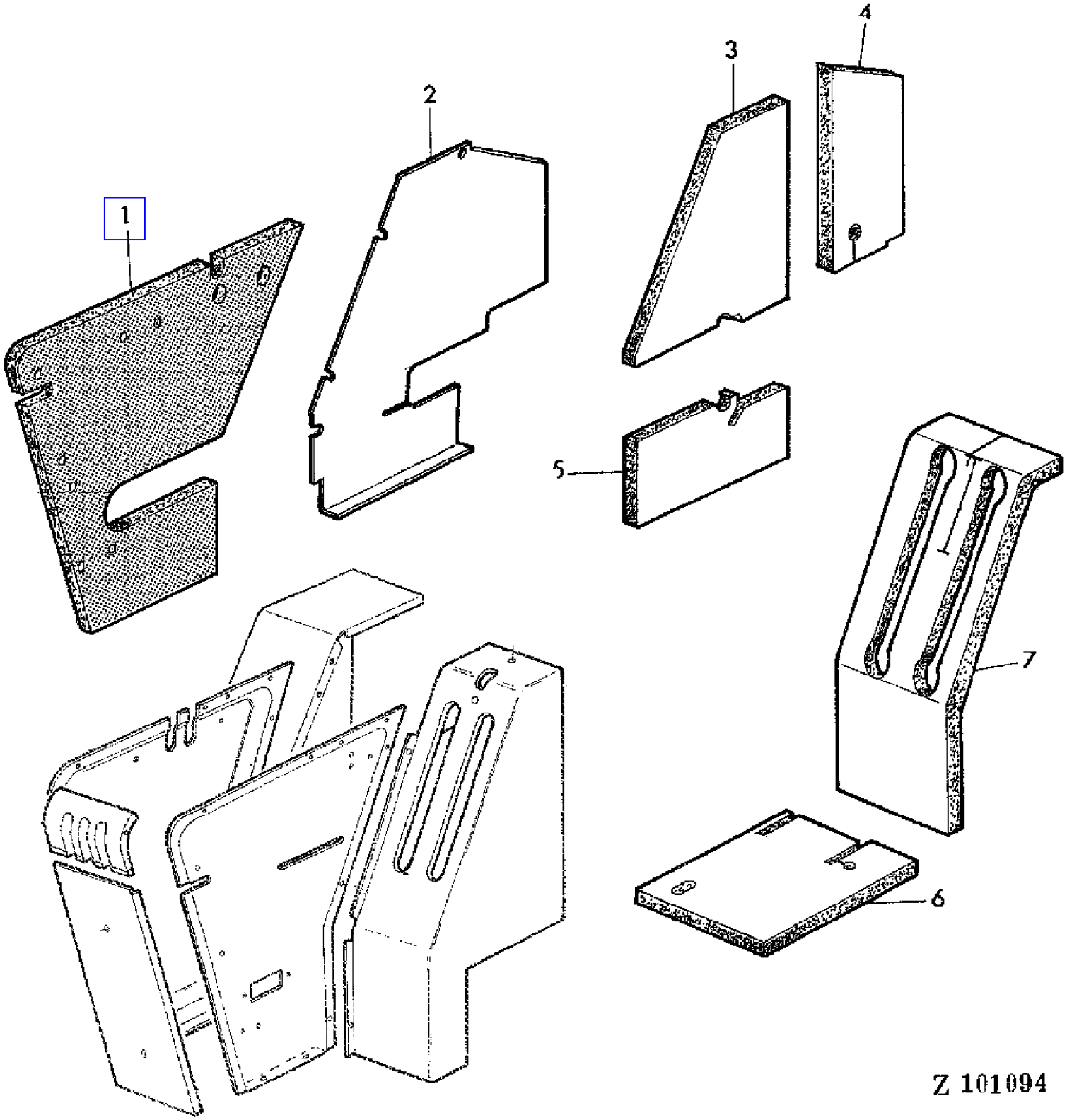

COPYRIGHT©1994 - 2008 DEERE & COMPANY Moline, Illinois All rights reserved

(3C20) SOUND INSULATION RH CONTROL HOUSING II-OPERATOR PLATFORM
INSONORISATION BOTTIER DE COMMANDE DROIT II
GERAEUSCHDAEMMUNG-SCHALTKASTEN RECHTS II
ELEMENTI ANTIRUMORE DELLA CASSA DI COMANDO DESTRA II
ELEMENTOS INSONORIZANTES DE LA CAJA DE MANDOS DERECHA II
LJUDISOLERINGSMATERIAL FOR MANOVERSPAKSHUS II

KEY	PART NO.	PART NAME	QTY	SERIAL NO.	955	REMARKS
1	Z41461	BARRIER	1		X	AR
2	Z41263	SHEET	1		X	AR
3	Z41267	BARRIER	1		X	AR
4	Z41265	BARRIER	1		X	AR
5	Z41266	BARRIER	1		X	AR
6	Z39513	BARRIER	1		X	AR
7	Z39500	BARRIER	1		X	AR

COPYRIGHT©1994 - 2008 DEERE & COMPANY Moline, Illinois All rights reserved

(3C24) SOUND INSULATION RH SIDE PANEL
INSONORISATION PAROI LATERALE DROITE
GERAEUSCHDAEMMUNG-SEITENWAND RECHTS
ELEMENTI ANTIRUMORE DELLA PARETE LATERALE DESTRA
ELEMENTOS INSONORIZANTES DE LA PARED LATERAL DERECHA
LJUDISOLERINGSMATERIAL FOR HOGER SIDSTYCKE

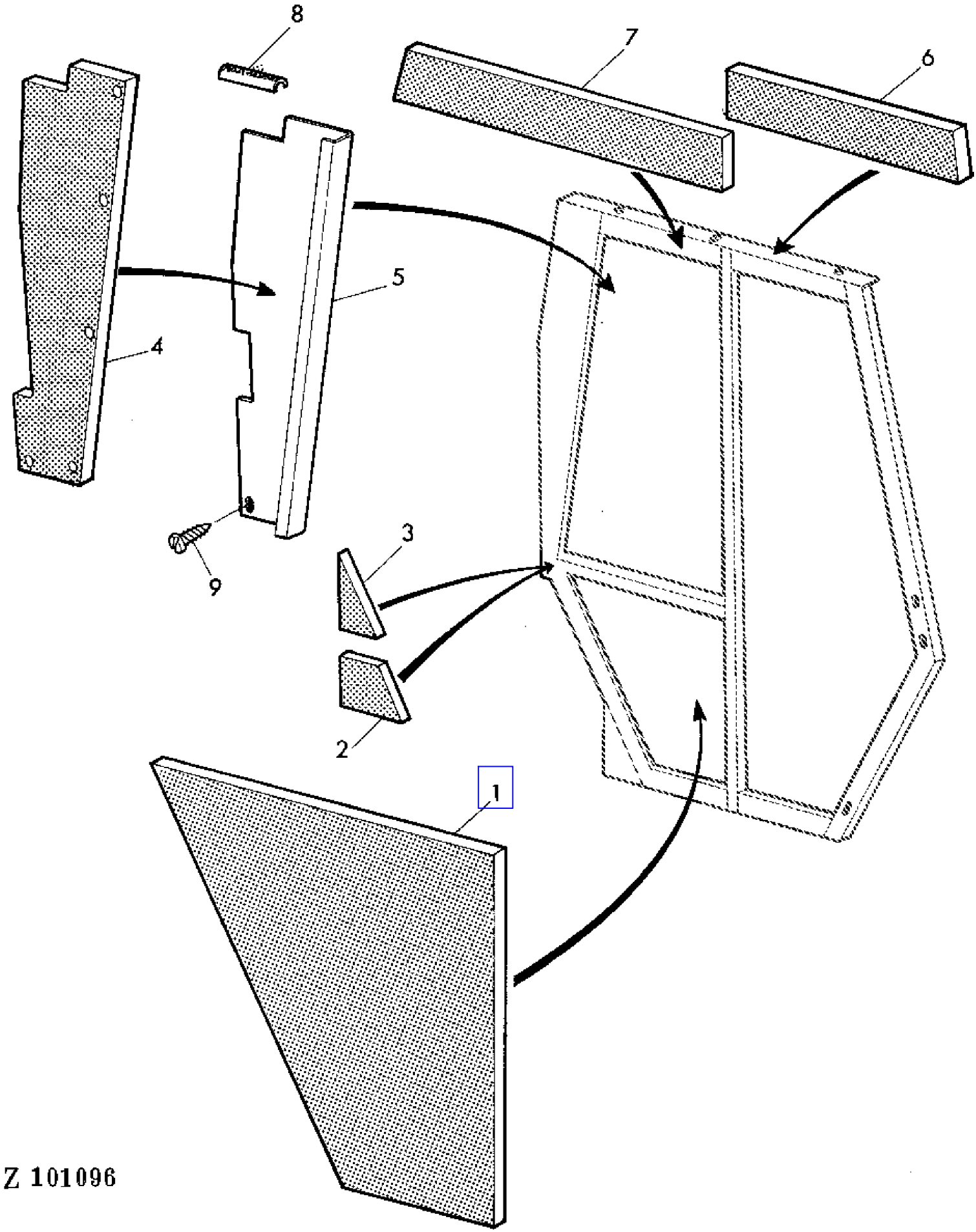

COPYRIGHT©1994 - 2008 DEERE & COMPANY Moline, Illinois All rights reserved

(3C24) SOUND INSULATION RH SIDE PANEL
INSONORISATION PAROI LATERALE DROITE
GERAEUSCHDAEMMUNG-SEITENWAND RECHTS
ELEMENTI ANTIRUMORE DELLA PARETE LATERALE DESTRA
ELEMENTOS INSONORIZANTES DE LA PARED LATERAL DERECHA
LJUDISOLERINGSMATERIAL FOR HOGER SIDSTYCKE

KEY	PART NO.	PART NAME	QTY	SERIAL NO.	955	REMARKS
1	Z39545	BARRIER	1		X	AR
2	Z41465	BARRIER	1		X	AR
3	Z39546	BARRIER	1		X	AR
4	Z41464	BARRIER	1		X	AR
5	Z41463	SHEET	1		X	AR
6	Z39538	BARRIER	1		X	AR
7	Z41466	BARRIER	1		X	AR
8	Z40677	GUARD	1		X	AR (SUB FOR Z35897)
9	37M7029	SCREW	AR		X	AR, 5,5X1MM

COPYRIGHT©1994 - 2008 DEERE & COMPANY Moline, Illinois All rights reserved

(3C16) SOUND INSULATION-OPERATOR PLATFORM
INSONORISATION PLATE-FORME DE CONDUITE
GERAEUSCHDAEMMUNG-FAHRERPLATTFORM
ELEMENTI ANTIRUMORE DELLA PIATTAFORMA DELL'OPERATORE
ELEMENTOS INSONORIZANTES DE LA PLATAFORMA DE CONDUCCION
LJUDISOLERINGSMATERIAL FOR FORARPLATTFORM

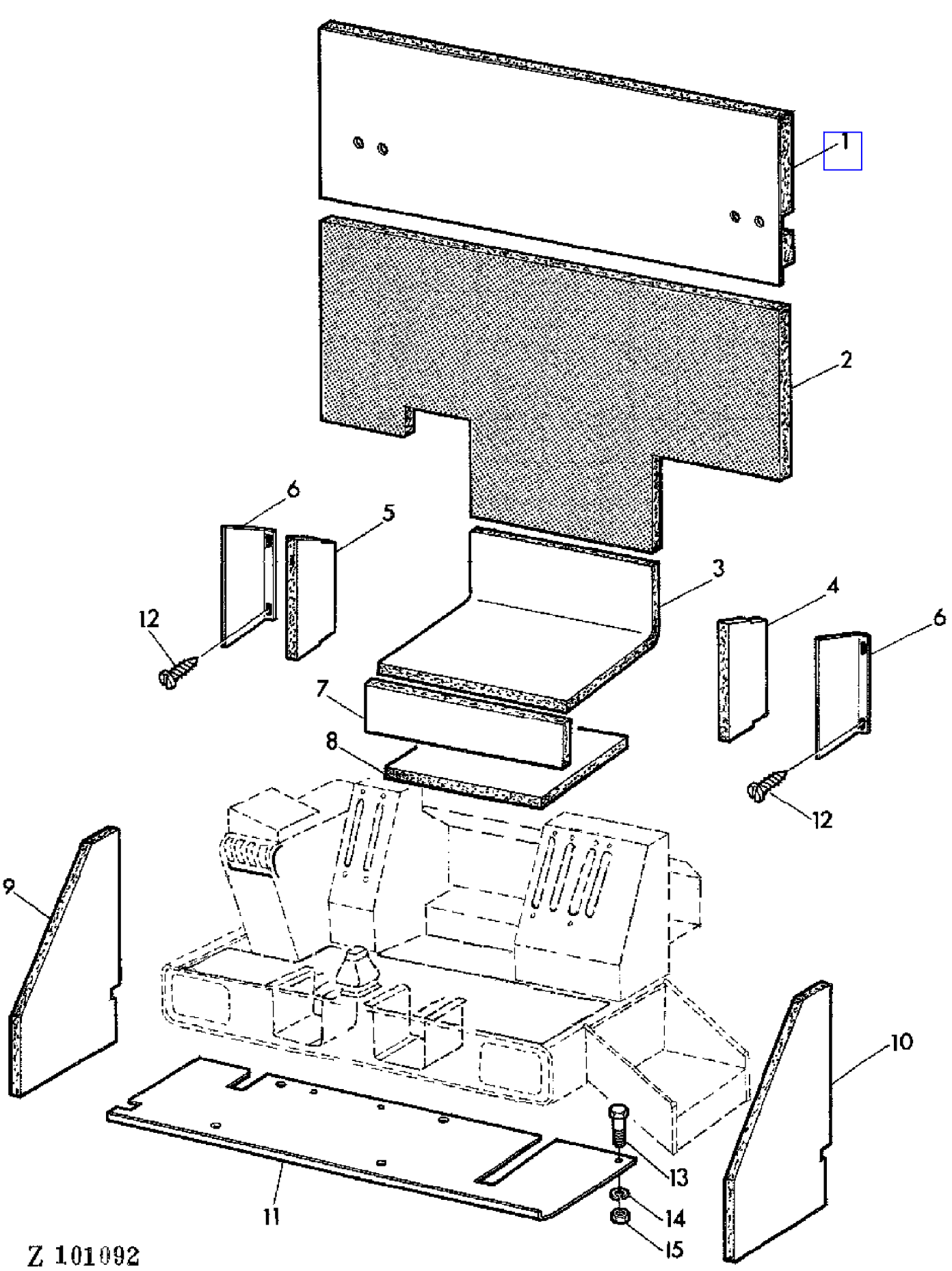

COPYRIGHT©1994 - 2008 DEERE & COMPANY Moline, Illinois All rights reserved

(3C16) SOUND INSULATION-OPERATOR PLATFORM
INSONORISATION PLATE-FORME DE CONDUITE
GERAEUSCHDAEMMUNG-FAHRERPLATTFORM
ELEMENTI ANTIRUMORE DELLA PIATTAFORMA DELL'OPERATORE
ELEMENTOS INSONORIZANTES DE LA PLATAFORMA DE CONDUCCION
LJUDISOLERINGSMATERIAL FOR FORARPLATTFORM

KEY	PART NO.	PART NAME	QTY	SERIAL NO.	955	REMARKS
1	Z41462	BARRIER	1		X	AR
2	Z41459	BARRIER	1		X	AR
3	Z41460	BARRIER	1		X	AR
4	Z41456	BARRIER	1		X	AR
5	Z41455	BARRIER	1		X	AR
6	Z41262	SHEET	2		X	AR
7	Z41457	BARRIER	1		X	AR
8	Z41458	BARRIER	1		X	AR
9	Z39528	BARRIER	1		X	AR
10	Z39527	BARRIER	1		X	AR
11	Z41261	SHEET	1		X	AR
12	37M7029	SCREW	AR		X	AR, 5,5X13MM
13	21M7087	SCREW	AR		X	AR, M6X12
14	14M7027	NUT	AR		X	AR, M6
15	12M7012	LOCK WASHER	AR		X	AR, 6MM

COPYRIGHT©1994 - 2008 DEERE & COMPANY Moline, Illinois All rights reserved

(3C18) SOUND INSULATION-RH CONTROL HSG I-OPERATOR PLATFORM
INSONORISATION BOTTIER DE COMMANDE DROIT I
GERAEUSCHDAEMMUNG-SCHALTKASTEN RECHTS I
ELEMENTI ANTIRUMORE DELLA CASSA DI COMANDO DESTRA I
ELEMENTOS INSONORIZANTES DE LA CAJA DE MANDOS DERECHA I
LJUDISOLERINGSMATERIAL FOR MANOVERSPAKSHUS I

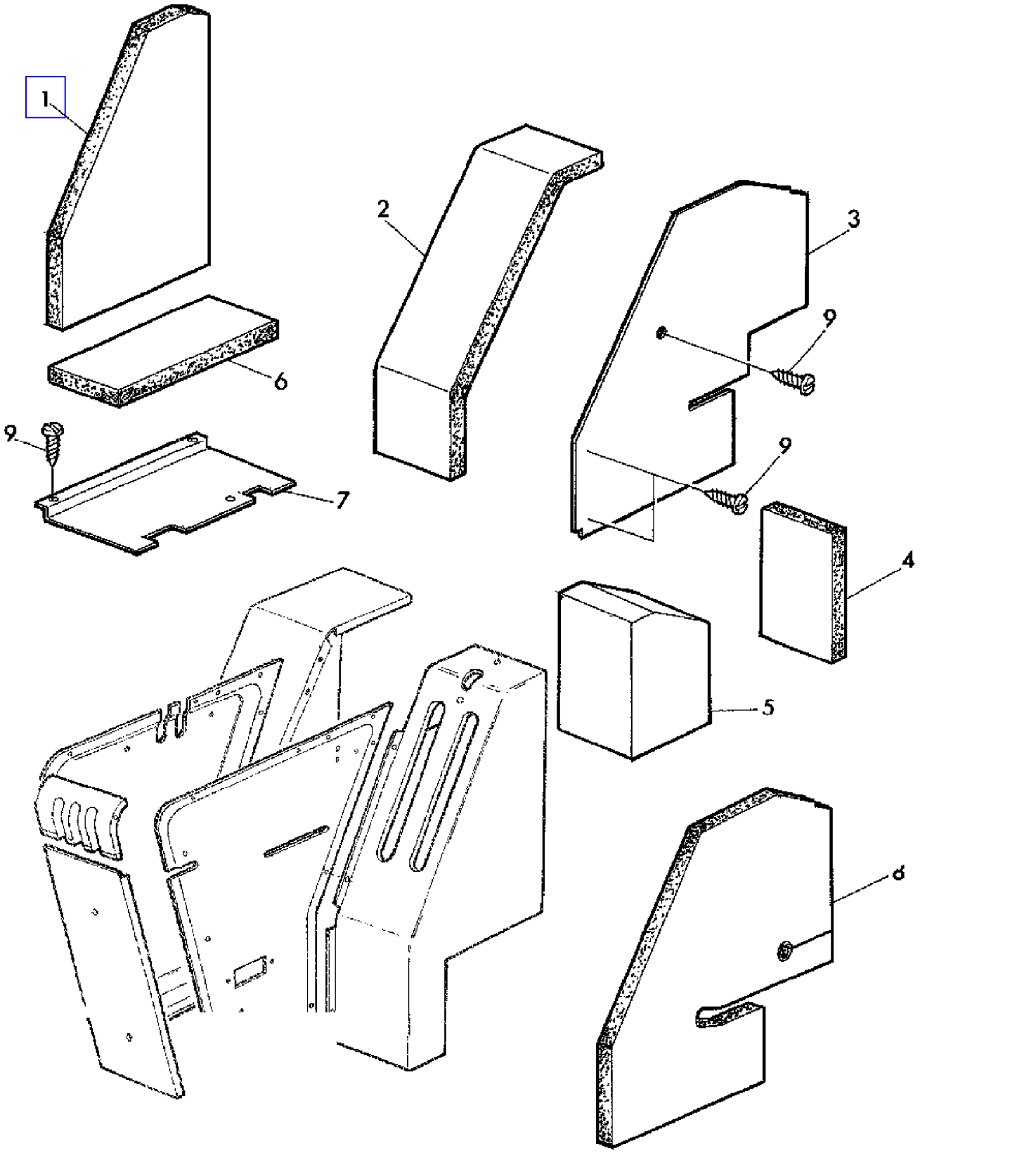

COPYRIGHT©1994 - 2008 DEERE & COMPANY Moline, Illinois All rights reserved

(3C18) SOUND INSULATION-RH CONTROL HSG I-OPERATOR PLATFORM
INSONORISATION BOTTIER DE COMMANDE DROIT I
GERAEUSCHDAEMMUNG-SCHALTKASTEN RECHTS I
ELEMENTI ANTIRUMORE DELLA CASSA DI COMANDO DESTRA I
ELEMENTOS INSONORIZANTES DE LA CAJA DE MANDOS DERECHA I
LJUDISOLERINGSMATERIAL FOR MANOVERSPAKSHUS I

KEY	PART NO.	PART NAME	QTY	SERIAL NO.	955	REMARKS
1	Z41449	BARRIER	1		X	AR
2	Z41448	BARRIER	1		X	AR
3	Z41447	SHEET	1		X	AR
4	Z41445	BARRIER	1		X	AR
5	Z41446	BARRIER	1		X	AR
6	Z41444	BARRIER	1		X	AR
7	Z41443	SHEET	1		X	AR
8	Z41264	BARRIER	1		X	AR
9	37M7029	SCREW	AR		X	AR, 5,5X13MM

COPYRIGHT©1994 - 2008 DEERE & COMPANY Moline, Illinois All rights reserved

(1H22) SPINDLE KNUCKLE AND REAR AXLE, STANDARD
FUSEE ET ESSIEV ARRIERE, STANDARD
ACHSSCHENKEL UND HINTERACHSE, STANDARD
MONTANTE E ASSALE POSTERIORE NORMALE
MANGUETA Y EJE TRASERO STANDARD
SPINDELTAPP OCH BAKAXEL, STANDARD

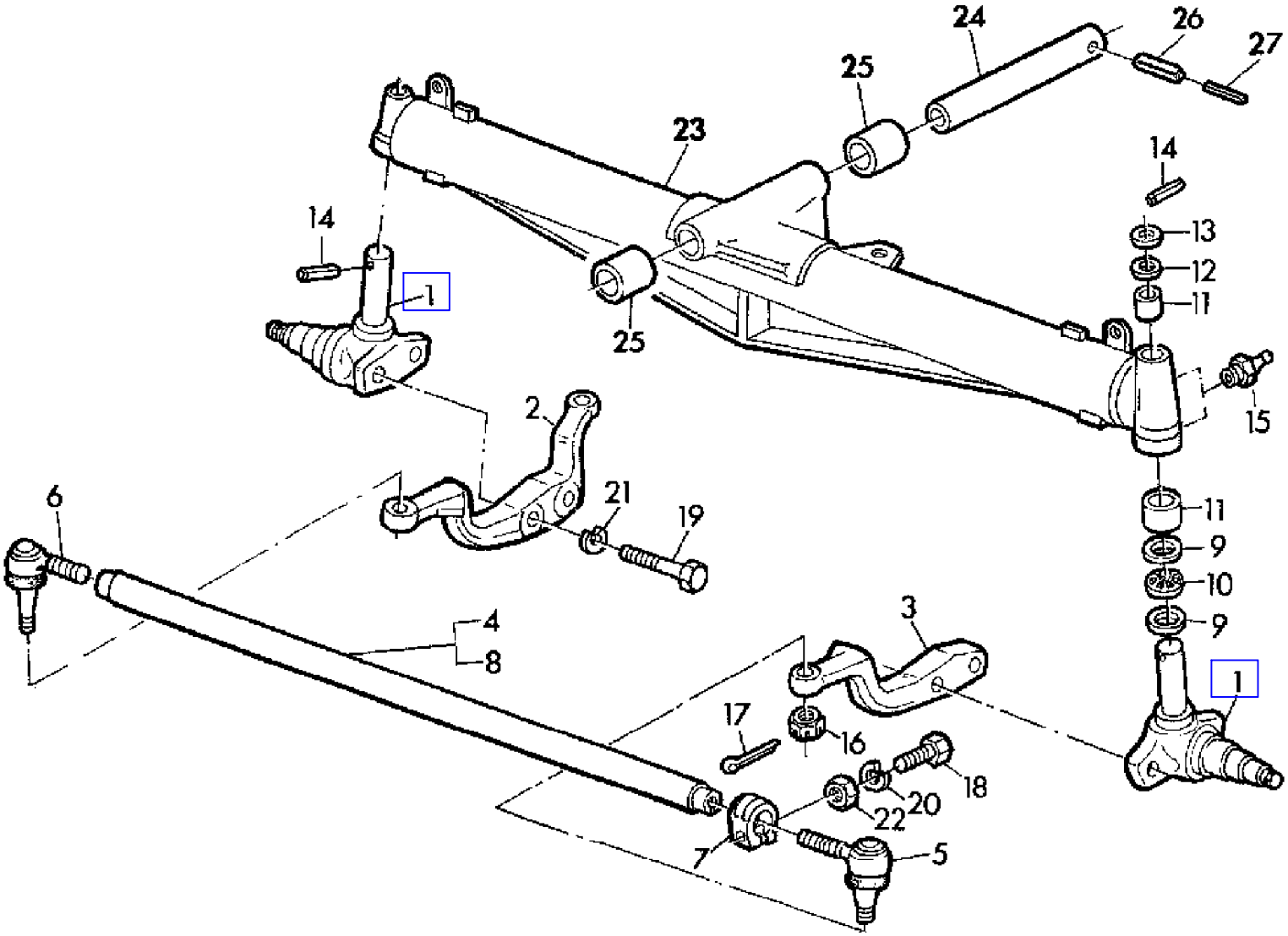

Z 27760

COPYRIGHT©1994 - 2008 DEERE & COMPANY Moline, Illinois All rights reserved

(1H22) SPINDLE KNUCKLE AND REAR AXLE, STANDARD
FUSEE ET ESSIEV ARRIERE, STANDARD
ACHSSCHENKEL UND HINTERACHSE, STANDARD
MONTANTE E ASSALE POSTERIORE NORMALE
MANGUETA Y EJE TRASERO STANDARD
SPINDELTAPP OCH BAKAXEL, STANDARD

KEY	PART NO.	PART NAME	QTY	SERIAL NO.	955	REMARKS
1	AZ29047	KNUCKLE	2		X	(SUB FOR AZ23688)
2	Z10601	LEVER	1		X	RH
3	Z10598	LEVER	1		X	LH
4	AZ17698	TIE ROD	1		X	ASSY, INCL KEYS 5-8,18,20,22
5	AZ10850	BALL JOINT	1		X	LH, INCL KEY 16
6	AZ10851	BALL JOINT	1		X	(A) RH, INCL KEY 16
7	Z29505	CLAMP	2		X	
8	Z29077	TIE ROD	1		X	
9	JD39128	THRUST BEARING	4		X	
10	JD39129	NEEDLE BEARING	2		X	
11	Z27522	BUSHING	4		X	
12	Z27524	SHIM	AR		X	TK = 2 MM
13	Z27523	WASHER	AR		X	TK = 0,5 MM
14	34M3871	SPRING PIN	2		X	6X55MM
15	58M5573	LUBRICATION FITTING	4		X	6X1MM
16	14M7177	NUT	2		X	M12X1,5
17	11M7014	COTTER PIN	2		X	3X25MM
18	19M7323	CAP SCREW	2		X	M8X40
19	19M7293	CAP SCREW	4		X	M18X75
20	12M7008	LOCK WASHER	2		X	8MM
21	12M5846	LOCK WASHER	4		X	18MM
22	14M7029	NUT	2		X	M8
23	AZ33071	REAR AXLE	1		X	(SUB FOR AZ20475)
24	Z21596	KINGPIN	1		X	
25	Z21575	BUSHING	2		X	
26	34M7048	SPRING PIN	1		X	8X45MM
27	34M7036	SPRING PIN	1		X	5X45MM

(A) LEFT-HAND THREAD
PAS A GAUCHE
LINKSGEWINDE
FILETTO SINISTRORSO
ROSCA DE PASO IZQUIERDO
VANSTERGANGAD

COPYRIGHT©1994 - 2008 DEERE & COMPANY Moline, Illinois All rights reserved

(1I02) SPINDLE KNUCKLE FOR WIDE REAR AXLE
FUSEE POUR ESSIEU LARGE
ACHSSCHENKEL FUER BREITE HINTERACHSE
MONTANTE PER ASSALE POSTERIORE LARGO
MANGUETA PARA EJE TRASERO ANCHO
SPINDELTAPP FOR BRED BAKAXEL

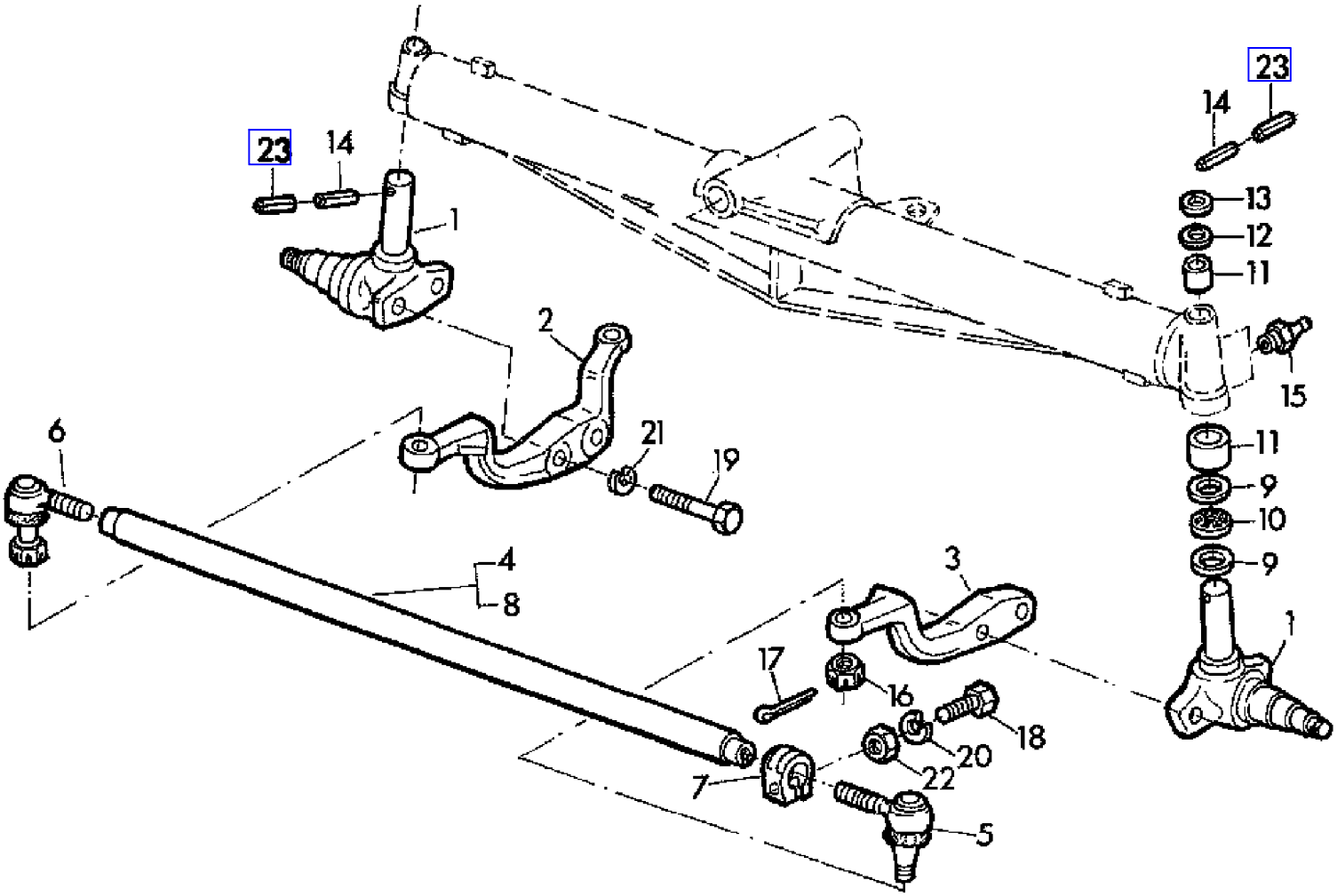

COPYRIGHT©1994 - 2008 DEERE & COMPANY Moline, Illinois All rights reserved

(1I02) SPINDLE KNUCKLE FOR WIDE REAR AXLE
FUSEE POUR ESSIEU LARGE
ACHSSCHENKEL FUER BREITE HINTERACHSE
MONTANTE PER ASSALE POSTERIORE LARGO
MANGUETA PARA EJE TRASERO ANCHO
SPINDELTAPP FOR BRED BAKAXEL

KEY	PART NO.	PART NAME	QTY	SERIAL NO.			955	REMARKS
1	AZ29047	KNUCKLE	2		-	023197	X	(SUB FOR AZ23688)
	AZ42468	KNUCKLE	2	023198	-		X	(SUB FOR AZ28787)
2	Z10601	LEVER	1		-	023197	X	RH
	Z11250	LEVER	1	023198	-		X	RH
3	Z10598	LEVER	1		-	023197	X	LH
	Z11247	LEVER	1	023198	-		X	LH
4	AZ17387	TIE ROD	1		-	023197	X	INCL KEYS 5-8,18,20,22
	AZ28781	TIE ROD	1	023198	-		X	INCL KEYS 5-8,18,20,22
5	AZ10850	BALL JOINT	1		-	023197	X	LH, INCL KEY 16
	AZ28778	BALL JOINT	1	023198	-		X	(A) LH
6	AZ10851	BALL JOINT	1		-	023197	X	(A) RH, INCL KEY 16
	AZ28777	BALL JOINT	1	023198	-		X	RH
7	Z29505	CLAMP	2		-	023197	X	
	Z37832	CLAMP	2	023198	-		X	
8	Z28833	TIE ROD	1		-	023197	X	
	Z39342	TIE ROD	1	023198	-		X	
9	JD39128	THRUST BEARING	4		-	023197	X	
	JD10146	THROW-OUT BEARING	4	023198	-		X	
10	JD39129	NEEDLE BEARING	2		-	023197	X	
	JD10147	THROW-OUT BEARING	2	023198	-		X	
11	Z27522	BUSHING	4		-	023197	X	
	Z39339	BUSHING	4	023198	-		X	
12	Z27524	SHIM	AR		-	023197	X	TK = 0,5 MM
	Z39330	SHIM	AR	023198	-		X	TK = 0,5 MM
13	Z27523	WASHER	AR		-	023197	X	TK = 2 MM
	Z39331	WASHER	AR	023198	-		X	TK = 2 MM
14	34M3871	SPRING PIN	2		-	023197	X	6X55MM
	34M7052	SPRING PIN	2	023198	-		X	8X65MM
15	58M5573	LUBRICATION FITTING	4				X	6X1MM
16	14M7177	NUT	2		-	023197	X	M12X1,5
	14M5495	NUT	2	023198	-		X	M14X1,5
17	11M7014	COTTER PIN	2		-	023197	X	3X25MM
	11M7017	COTTER PIN	2	023198	-		X	3,2X32MM
18	19M7323	CAP SCREW	2		-	023197	X	M8X40
	19M7180	CAP SCREW	2	023198	-		X	M10X45
19	19M7293	CAP SCREW	4		-	023197	X	M18X75
	19M7892	CAP SCREW	4	023198	-		X	M20X80
20	12M7008	LOCK WASHER	2		-	023197	X	8MM
	12M7013	LOCK WASHER	2	023198	-		X	10MM

(A) LEFT-HAND THREAD
PAS A GAUCHE
LINKSGEWINDE
FILETTO SINISTRORSO
ROSCA DE PASO IZQUIRDO
VANSTERGANGAD

COPYRIGHT©1994 - 2008 DEERE & COMPANY Moline, Illinois All rights reserved

(1I02) SPINDLE KNUCKLE FOR WIDE REAR AXLE
FUSEE POUR ESSIEU LARGE
ACHSSCHENKEL FUER BREITE HINTERACHSE
MONTANTE PER ASSALE POSTERIORE LARGO
MANGUETA PARA EJE TRASERO ANCHO
SPINDELTAPP FOR BRED BAKAXEL

KEY	PART NO.	PART NAME	QTY	SERIAL NO.			955	REMARKS
21	12M5846	LOCK WASHER	4		-	023197	X	18MM
	12M7039	LOCK WASHER	4	023198	-		X	20MM
22	14M7029	NUT	2		-	023197	X	M8
	14M7140	NUT	2	023198	-		X	M10
23	34M7119	SPRING PIN	2	023198	-		X	5X65MM

(A) LEFT-HAND THREAD
PAS A GAUCHE
LINKSGEWINDE
FILETTO SINISTRORSO
ROSCA DE PASO IZQUIRDO
VANSTERGANGAD

COPYRIGHT©1994 - 2008 DEERE & COMPANY Moline, Illinois All rights reserved

(1E22) STARTING MOTOR
DEMARREUR
STARTER
AVVIATORE ELETTRICO
MOTOR DE ARRANQUE
STARTMOTOR

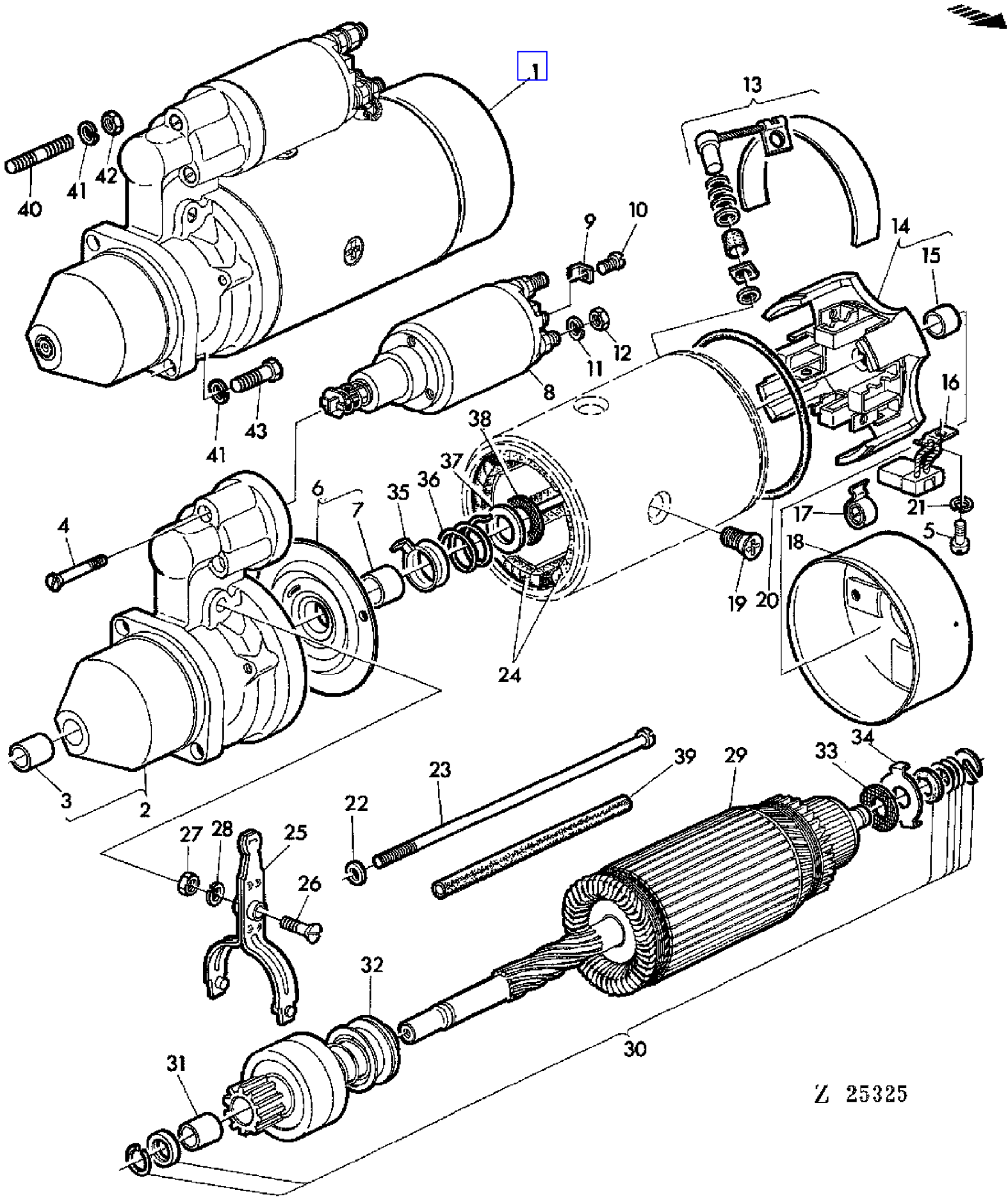

COPYRIGHT©1994 - 2008 DEERE & COMPANY Moline, Illinois All rights reserved

(PC4146) 955 Combine

(1E22) STARTING MOTOR
DEMARREUR
STARTER
AVVIATORE ELETTRICO
MOTOR DE ARRANQUE
STARTMOTOR

KEY	PART NO.	PART NAME	QTY	SERIAL NO.	955	REMARKS
1	AR70436	STARTER MOTOR	1		X	ASSY, INCL KEYS 2-39 (JD R12 V4PS) R.BOSCH-0 001 359 090 (ORD AL41247)
2	AL25266	HOUSING	1		X	INCL KEY 3
3	L19651	BUSHING	1		X	
4	L30860	SCREW	3		X	
5	21M7198	SCREW	AR		X	M5X8
6	AL25267	QUILL	1		X	INCL KEY 7
7	L30862	BUSHING	1		X	
8	AL25268	SOLENOID	1		X	
9	L29156	CLAMP	1		X	
10	21M1211	SCREW	1		X	M4X6
11	12M7013	LOCK WASHER	2		X	10MM
12	14M7152	NUT	4		X	M10
13	AL25269	KIT	1		X	KIT
14	AL25270	COMMUTATOR HOUSING	1		X	INCL KEY 15
15	Z24799	BUSHING	1		X	
16	AL25271	CARBON BRUSH HOLDER	1		X	KIT
17	Z24810	COMPRESSION SPRING	4		X	
18	L29158	COVER	1		X	
19	L29157	SCREW	1		X	
20	Z24801	O-RING	1		X	
21	12M7011	LOCK WASHER	4		X	5MM
22	L30863	WASHER	AR		X	
23	L29152	SCREW	AR		X	
24	AL25272	FIELD WINDING COIL	1		X	
25	AL25273	LEVER	1		X	
26	T27671	SCREW	1		X	
27	14M7151	NUT	1		X	M8
28	12M7008	LOCK WASHER	1		X	8MM
29	AL25274	ARMATURE	1		X	
30	AL23848	ARMATURE	1		X	
31	Z24800	BUSHING	1		X	
32	AL25275	DRIVE	1		X	
33	L30869	DISK	1		X	
34	L30868	THRUST WASHER	1		X	
35	L30864	GUIDE	1		X	
36	L30865	SPRING	1		X	
37	L30866	GUIDE	1		X	
38	L30867	BRAKE DISK	1		X	
39	L30861	PIPE	2		X	
40	M3636T	STUD	1		X	3/8"X1-1/2"
41	12H304	LOCK WASHER	2		X	3/8"
42	14H812	NUT	1		X	3/8"
43	19H1731	CAP SCREW	1		X	3/8"X1"

COPYRIGHT©1994 - 2008 DEERE & COMPANY Moline, Illinois All rights reserved

(1E22) STARTING MOTOR
DEMARREUR
STARTER
AVVIATORE ELETTRICO
MOTOR DE ARRANQUE
STARTMOTOR

KEY	PART NO.	PART NAME	QTY	SERIAL NO.	955	REMARKS

COPYRIGHT©1994 - 2008 DEERE & COMPANY Moline, Illinois All rights reserved

(1E24) STARTING MOTOR
DEMARREUR
ANLASSER
MOTORINO D'AVVIAMENTO
MOTOR DE ARRANQUE
STARTMOTOR

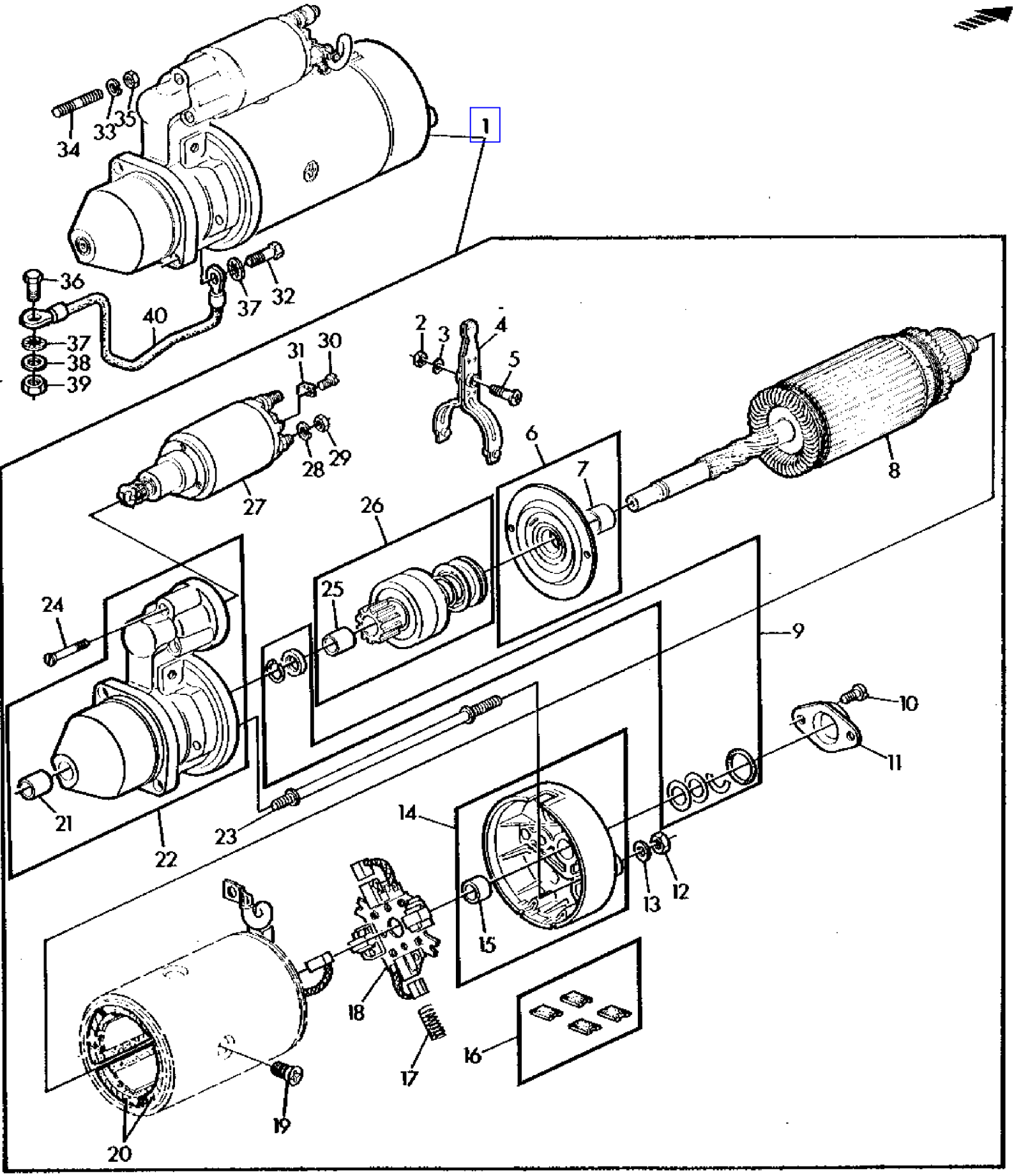

COPYRIGHT©1994 - 2008 DEERE & COMPANY Moline, Illinois All rights reserved

(1E24) STARTING MOTOR
DEMARREUR
ANLASSER
MOTORINO D'AVVIAMENTO
MOTOR DE ARRANQUE
STARTMOTOR

KEY	PART NO.	PART NAME	QTY	SERIAL NO.	955	REMARKS
1	AL41247	STARTER MOTOR	1		X	R.BOSCH-0 001 362 312
2	14M7151	NUT	1		X	M8
3	12M7008	LOCK WASHER	1		X	M8
4	AL25273	LEVER	1		X	
5	L41582	SCREW	1		X	
6	AL25267	QUILL	1		X	
7	L30862	BUSHING	1		X	
8	AL55042	ARMATURE	1		X	
9	AL41522	KIT	1		X	
10	21M7271	SCREW	2		X	M5X16
11	L42043	CAP	1		X	
12	14M7272	NUT	2		X	M6
13	24M7054	WASHER	2		X	
14	AL41520	COMMUTATOR HOUSING	1		X	
15	L41081	BUSHING	1		X	
16	AL55047	CARBON BRUSH CONDUCTOR	1		X	
17	L55066	COMPRESSION SPRING	4		X	
18	AL55044	CARBON BRUSH HOLDER	1		X	
19	L29157	SCREW	4		X	
20	AL55043	FIELD WINDING COIL	1		X	
21	L19651	BUSHING	1		X	
22	AL41525	HOUSING	1		X	
23	L55064	STUD	2		X	
24	L30860	SCREW	3		X	
25	Z24800	BUSHING	1		X	
26	AL63095	BUSHING	1		X	(SUB FOR AL41626)
27	AL55046	SOLENOID	1		X	
28	12M7013	LOCK WASHER	2		X	10MM
29	14M7152	NUT	2		X	M10
30	21M1211	SCREW	1		X	M4X6
31	L29156	CLAMP	1		X	
32	19H1731	CAP SCREW	1		X	3/8"X1"
33	12H304	LOCK WASHER	1		X	3/8"
34	M3636T	STUD	1		X	3/8"X1-1/2"
35	14H812	NUT	1		X	3/8"
36	19M7163	CAP SCREW	1		X	M8X25
37	12M7113	LOCK WASHER	2		X	10,5MM
38	24M7036	WASHER	1		X	9MM
39	14M7014	NUT	1		X	M8
40	AZ25669	CABLE	1		X	

COPYRIGHT©1994 - 2008 DEERE & COMPANY Moline, Illinois All rights reserved

(3A17) STEERING COLUMN
COLONNE DE DIRECTION
LENKSAEULE
PIANTONE DI STERZO
COLUMNA DE DIRECCION
RATTKONSOLL

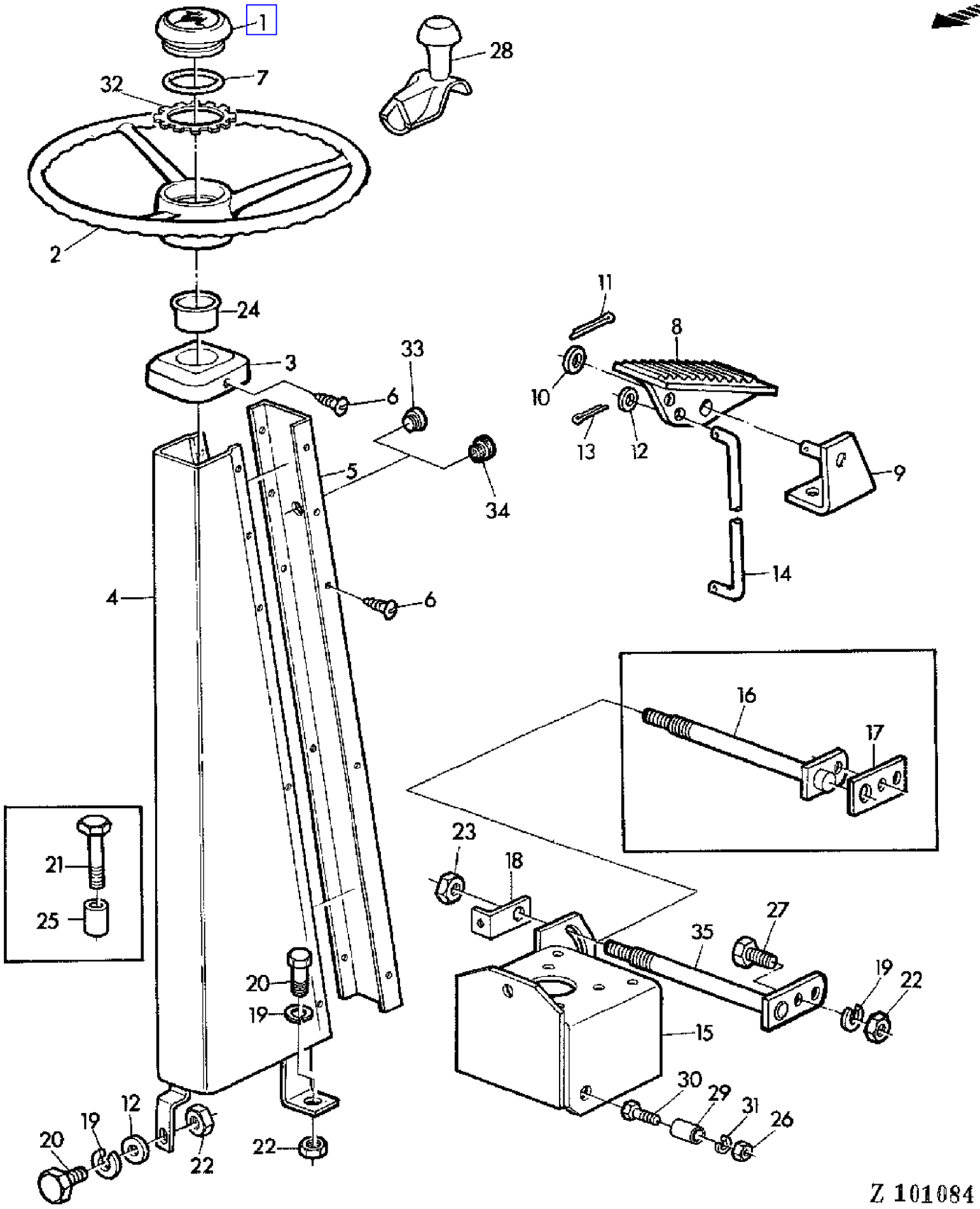

COPYRIGHT©1994 - 2008 DEERE & COMPANY Moline, Illinois All rights reserved

(3A17) STEERING COLUMN
COLONNE DE DIRECTION
LENKSAEULE
PIANTONE DI STERZO
COLUMNA DE DIRECCION
RATTKONSOLL

KEY	PART NO.	PART NAME	QTY	SERIAL NO.			955	REMARKS
1	AL36533	COVER	1				X	(SUB FOR L29260, R47998)
2	AL28457	STEERING WHEEL	1				X	(SUB FOR T22875)
3	Z29759	GUIDE	1		-	019970	X	
	Z38823	CAP	1	019971	-		X	
4	AZ18428	SHEET	1				X	FRONT
5	Z29866	SHEET	1		-	XXXX	X	REAR (ORD Z34506, Z41539)
	Z41539	SHEET	1	XXXX	-		X	REAR
6	37M7011	SCREW	AR				X	4,8X9,5MM
7	B3690R	O-RING	1				X	
8	Z11279	PEDAL	1				X	(SUB FOR Z10665)
9	AZ18424	RETAINER	1				X	
10	24M7085	WASHER	1				X	15MM
11	11M7020	COTTER PIN	1				X	4X25MM
12	24M7055	WASHER	2				X	8,4MM
13	11M7011	COTTER PIN	2				X	3X15MM
14	Z29753	BAIL	1		-	026722	X	
	Z39401	BAIL	1	026723	-		X	
15	AZ18426	BRACKET	1		-	026722	X	
	AZ28873	TUBE	1	026723	-		X	
16	AZ18422	PIN	1		-	XXXX	X	
17	Z29752	PLATE	1		-	XXXX	X	
18	Z38106	LOCK PLATE	1		-	026722	X	(SUB FOR Z29750)
	Z39402	LOCK PLATE	1	026723	-		X	
19	12M7008	LOCK WASHER	4				X	8MM
20	19M7139	CAP SCREW	3				X	M8X20
21	19M7184	CAP SCREW	2				X	M8X55
22	14M7029	NUT	4				X	M8
23	14M7146	NUT	1				X	M12
24	Z31192	BUSHING	1				X	
25	Z29745	SPACER	2				X	
26	14M7140	NUT	2				X	M10
27	19M7163	CAP SCREW	1				X	M8X25
28	AZ38364	HANDLE	1				X	(SUB FOR AZ24318)
29	Z32649	SPACER	2				X	ID = 12 MM
30	19M7167	CAP SCREW	2				X	M10X25
31	12M7013	LOCK WASHER	2				X	10MM
32	R71650	WASHER	1				X	
33	Z34506	GROMMET	1	XXXX	-		X	
34	Z41514	PLUG	1	XXXX	-		X	
35	AZ31228	PIVOT	1	XXXX	-		X	

COPYRIGHT©1994 - 2008 DEERE & COMPANY Moline, Illinois All rights reserved

(2C03) STEERING CYLINDER
VERIN DE DIRECTION
LENKZYLINDER
CILINDRO DI STERZO
CILINDRO DE LA DIRECCION HIDRAULICA
STYRCYLINDER

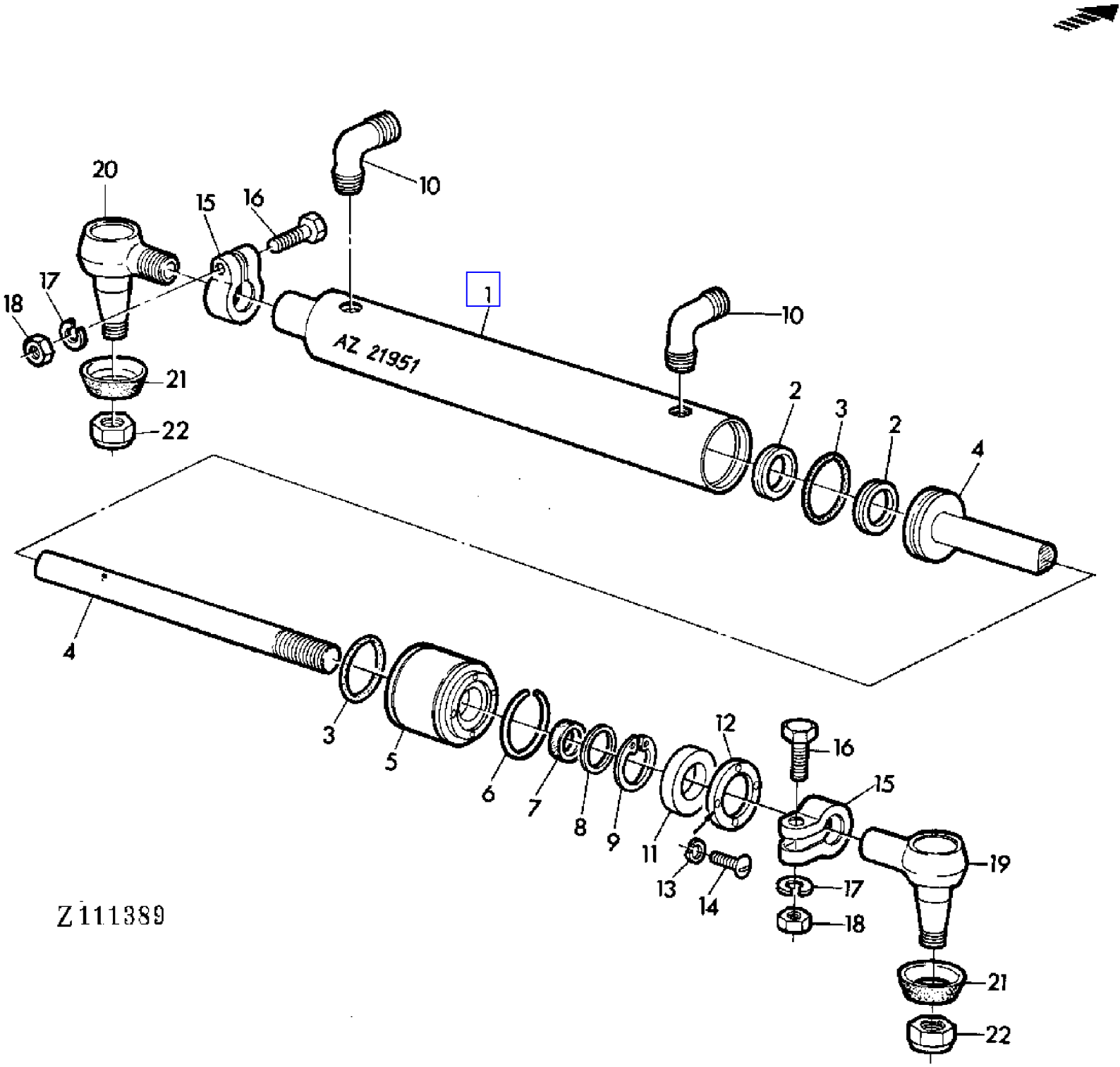

COPYRIGHT©1994 - 2008 DEERE & COMPANY Moline, Illinois All rights reserved

(2C03) STEERING CYLINDER
VERIN DE DIRECTION
LENKZYLINDER
CILINDRO DI STERZO
CILINDRO DE LA DIRECCION HIDRAULICA
STYRCYLINDER

KEY	PART NO.	PART NAME	QTY	SERIAL NO.	955	REMARKS
1	AZ21953	HYDRAULIC CYLINDER BARREL	1		X	(ORD AZ16232)
	AZ21953	HYDRAULIC CYLINDER BARREL	1	- 023197	X	(A) (ORD AZ16232)
2	.....	HYDRAULIC CYLINDER BARREL	2		X	(ORD AZ37852) (SUB FOR Z32936)
	.....	HYDRAULIC CYLINDER BARREL	2	- 023197	X	(A) (ORD AZ37852) (SUB FOR Z32936)
3	.....	O-RING	2		X	(ORD AZ37852)
	.....	O-RING	2	- 023197	X	(A) (ORD AZ37852)
4	AZ21952	ROD	1		X	(ORD AZ16232)
	AZ21952	ROD	1	- 023197	X	(A) (ORD AZ16232)
5	Z32935	GUIDE	1		X	(ORD AZ16232)
	Z32935	GUIDE	1	- 023197	X	(A) (ORD AZ16232)
6	Z32937	SNAP RING	1		X	
	Z32937	SNAP RING	1	- 023197	X	(A)
7	.....	HYDRAULIC CYLINDER BARREL	1		X	(ORD AZ37852)
	.....	HYDRAULIC CYLINDER BARREL	1	- 023197	X	(A) (ORD AZ37852)
8	.....	O-RING	1		X	(ORD AZ37852)
	.....	O-RING	1	- 023197	X	(A) (ORD AZ37852)
9	Z32934	SNAP RING	1		X	
	Z32934	SNAP RING	1	- 023197	X	(A)
10	Z32988	ELBOW FITTING	2		X	
	Z32988	ELBOW FITTING	2	- 023197	X	(A)
11	.....	RING	1		X	(ORD AZ37852)
	.....	RING	1	- 023197	X	(A) (ORD AZ37852)
12	Z32931	FLANGE	1		X	
	Z32931	FLANGE	1	- 023197	X	(A)
13	12H295	LOCK WASHER	4	- 023197	X	3/16"
	12H295	LOCK WASHER	4		X	3/16"
14	21H1301	SCREW	4	- 023197	X	(A)
	21H1301	SCREW	4		X	0.190" X 1/2"
15	M2300T	CLAMP	2	- 023197	X	(A)
	M2300T	CLAMP	2		X	
16	19H1765	CAP SCREW	2		X	3/8"X1-3/4"
	19H1765	CAP SCREW	2	- 023197	X	(A) 3/8"X1-3/4"
17	12H304	LOCK WASHER	2		X	3/8"
	12H304	LOCK WASHER	2	- 023197	X	(A) 3/8"
18	14H812	NUT	2		X	3/8"
	14H812	NUT	2	- 023197	X	(A) 3/8"
19	AH75396	TIE ROD END	1		X	RH (SUB FOR AH19765)
	AH75396	TIE ROD END	1	- 023197	X	(A) RH (SUB FOR AH19765)
20	AH75397	TIE ROD END	1		X	LH (SUB FOR AH19766)

(A) FOR COMBINES WITH WIDE REAR AXLE
POUR MOISSONNEUSE-BATTEUSE AVEC ESSIEU ARRIERE LARGE
FUER MAEHDRESCHER MIT BREITER HINTERACHSE
PER MIETITREBBIE CON ASSALE POSTERIORE LARGO
PARA COSECHADORAS CON EJE TRASERO ANCHO
FOR SKORDETROSKOR MED BRED BAKAXEL

COPYRIGHT©1994 - 2008 DEERE & COMPANY Moline, Illinois All rights reserved

(2C03) STEERING CYLINDER
VERIN DE DIRECTION
LENKZYLINDER
CILINDRO DI STERZO
CILINDRO DE LA DIRECCION HIDRAULICA
STYRCYLINDER

KEY	PART NO.	PART NAME	QTY	SERIAL NO.	955	REMARKS
	AH75397	TIE ROD END	1	- 023197	X	(A) LH (SUB FOR AH19766)
21	H35664	BOOT	2		X	
	H35664	BOOT	2	- 023197	X	(A)
22	CM10111	LOCK NUT	2		X	
	CM10111	LOCK NUT	2	- 023197	X	(A)
..	AZ21951	HYDRAULIC CYLINDER	1		X	INCL KEYS 1-18 (ORD AZ16232)
..	AZ37852	GASKET KIT	1		X	KIT, INCL KEYS 2,3,7,8,11 (ORD AZ21951)
..	AZ21951	HYDRAULIC CYLINDER	1	- 023197	X	(A) INCL KEYS 1-18 (ORD AZ16232)

```
(A) FOR COMBINES WITH WIDE REAR AXLE
    POUR MOISSONNEUSE-BATTEUSE AVEC ESSIEU ARRIERE LARGE
    FUER MAEHDRESCHER MIT BREITER HINTERACHSE
    PER MIETITREBBIE CON ASSALE POSTERIORE LARGO
    PARA COSECHADORAS CON EJE TRASERO ANCHO
    FOR SKORDETROSKOR MED BRED BAKAXEL
```

COPYRIGHT©1994 - 2008 DEERE & COMPANY Moline, Illinois All rights reserved

(2E02) STEERING CYLINDER
VERIN DE DIRECTION
LENKZYLINDER
CILINDRO DI STERZO
CILINDRO DE DIRECCION HIDRAULICA
STYRCYLINDER

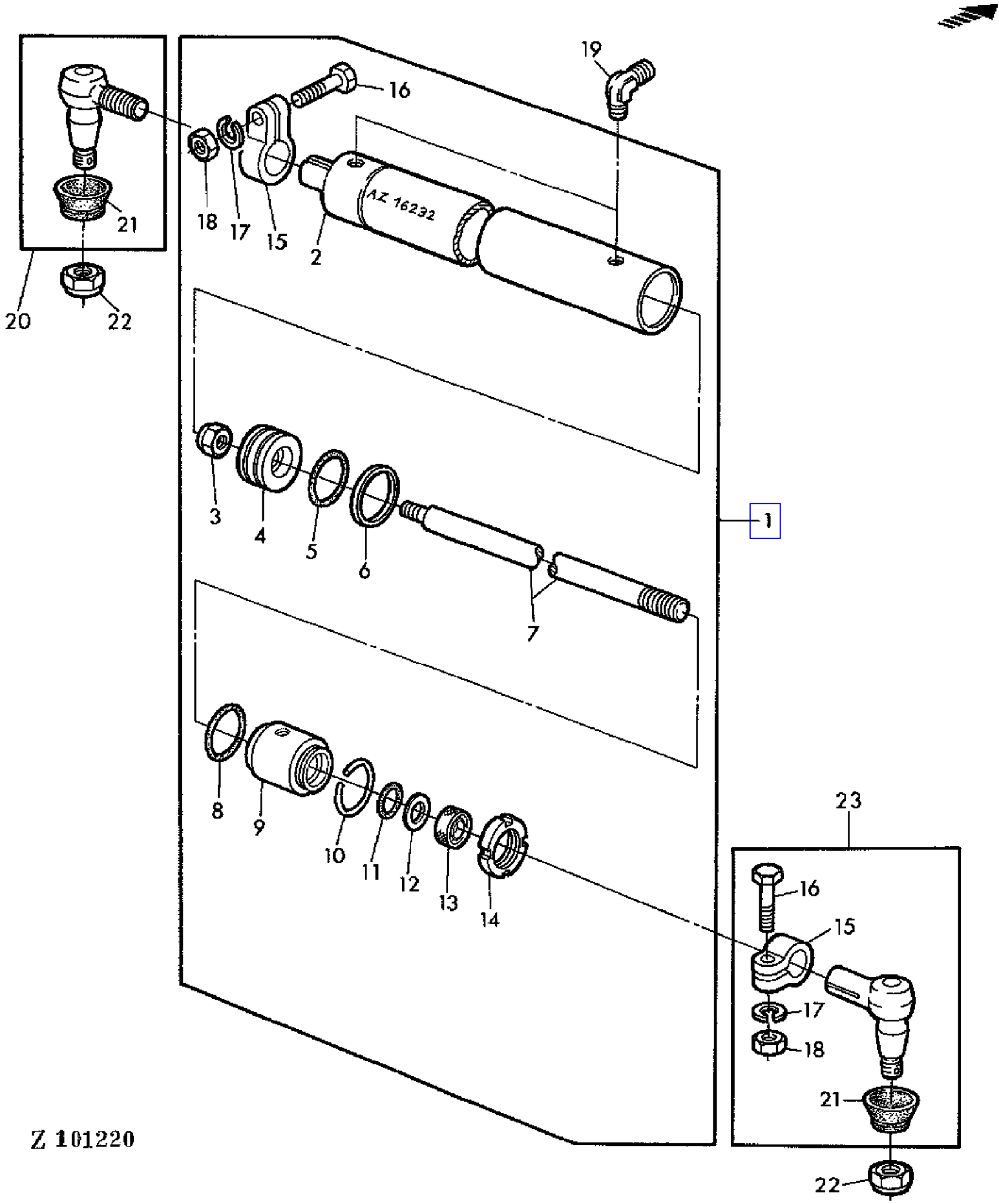

COPYRIGHT©1994 - 2008 DEERE & COMPANY Moline, Illinois All rights reserved

(2E02) STEERING CYLINDER
VERIN DE DIRECTION
LENKZYLINDER
CILINDRO DI STERZO
CILINDRO DE DIRECCION HIDRAULICA
STYRCYLINDER

KEY	PART NO.	PART NAME	QTY	SERIAL NO.	955	REMARKS
1	AZ16232	HYDRAULIC CYLINDER	1		X	INCL KEYS 2-14,15,16,17,18 (SUB FOR AZ21951)
2	.....	HYDRAULIC CYLINDER BARREL	1		X	NSEP (ORD AZ16232)
3	Z27690	NUT	1		X	
4	.....	PISTON	1		X	NSEP (ORD AZ16232)
5	.....	O-RING	2		X	(ORD AZ37853)
6	.....	BACK-UP RING	2		X	(ORD AZ37853)
7	.....	ROD	1		X	NSEP (ORD AZ16232)
8	.....	O-RING	1		X	(ORD AZ37853)
9	.....	HYDR. CYLINDER ROD GUIDE	1		X	NSEP (ORD AZ16232)
10	.....	SNAP RING	1		X	(ORD AZ37853)
11	.....	O-RING	1		X	(ORD AZ37853)
12	.....	RING	1		X	(ORD AZ37853)
13	.....	SNAP RING	1		X	(ORD AZ37853)
14	Z27691	NUT	1		X	
15	M2300T	CLAMP	2		X	
16	19H1765	CAP SCREW	2		X	3/8"X1-3/4"
17	12H304	LOCK WASHER	2		X	3/8"
18	14H812	NUT	2		X	3/8"
19	Z32988	ELBOW FITTING	2		X	
20	AH75397	TIE ROD END	1		X	INCL KEY 21
21	H35664	BOOT	2		X	
22	CM10111	LOCK NUT	2		X	
23	AH75396	TIE ROD END	1		X	INCL KEYS 15-18,21
..	AZ37853	GASKET KIT	1		X	KIT, INCL KEYS 5,6,8,10-13 (FOR AZ16232)

COPYRIGHT©1994 - 2008 DEERE & COMPANY Moline, Illinois All rights reserved

(2C04) STEERING CYLINDER FOR WIDE REAR AXLE
VERIN DE DIRECTION POUR ESSIEU LARGE
LENKZYLINDER FUER BREITE HINTERACHSE
CILINDRO DI STERZO PER ASSALE POSTERIORE LARGO
CILINDRO DE DIRECCION PARA EJE TRASERO ANCHO
STYRCYLINDER FOR BRED BAKAXEL

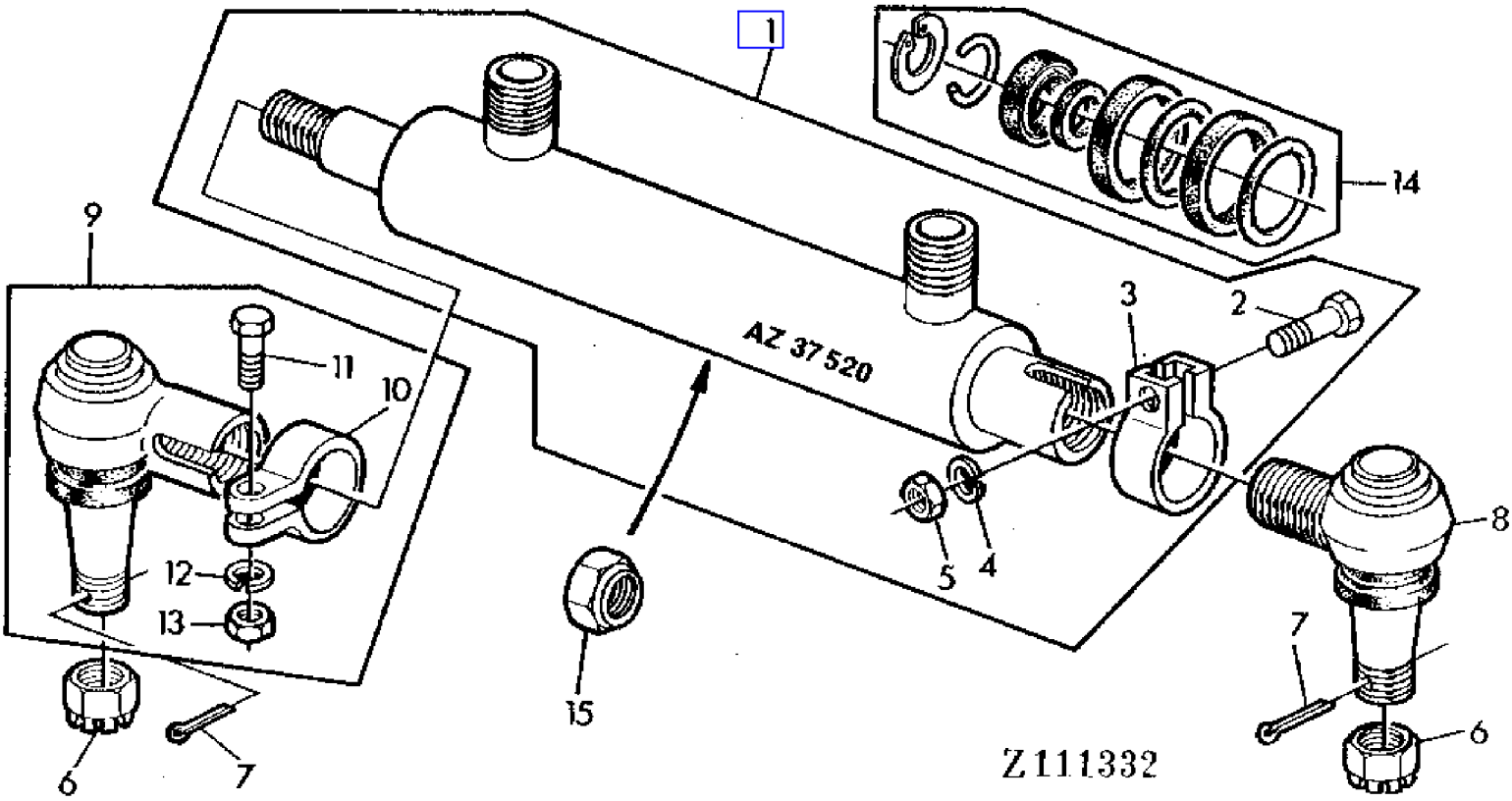

COPYRIGHT©1994 - 2008 DEERE & COMPANY Moline, Illinois All rights reserved

(2C04) STEERING CYLINDER FOR WIDE REAR AXLE
VERIN DE DIRECTION POUR ESSIEU LARGE
LENKZYLINDER FUER BREITE HINTERACHSE
CILINDRO DI STERZO PER ASSALE POSTERIORE LARGO
CILINDRO DE DIRECCION PARA EJE TRASERO ANCHO
STYRCYLINDER FOR BRED BAKAXEL

KEY	PART NO.	PART NAME	QTY	SERIAL NO.		955	REMARKS
1	AZ37520	HYDRAULIC CYLINDER	1	023198	-	X	(SUB FOR AR90985)
2	19M2930	CAP SCREW	1	023198	-	X	M16X65
3	Z48022	CLAMP	1	023198	-	X	
4	12M7069	LOCK WASHER	1	023198	-	X	16MM
5	14M7286	NUT	1	023198	-	X	M16
6	14M5408	NUT	2	023198	-	X	M18X1,5
7	11M7024	COTTER PIN	2	023198	-	X	4X36MM
8	AZ28775	BALL JOINT	1	023198	-	X	
9	AZ28776	BALL JOINT	1	023198	-	X	
10	Z39348	CLAMP	1	023198	-	X	
11	19M7287	CAP SCREW	1	023198	-	X	M10X50
12	12M7013	LOCK WASHER	1	023198	-	X	10MM
13	14M7140	NUT	1	023198	-	X	M10
14	AZ37844	SEAL KIT	1	023198	-	X	KIT (FOR AZ37520)
15	Z47519	LOCK NUT	1	023198	-	X	

COPYRIGHT©1994 - 2008 DEERE & COMPANY Moline, Illinois All rights reserved

(2C05) STEERING CYLINDER FOR WIDE REAR AXLE
VERIN DE DIRECTION POUR ESSIEU LARGE
LENKZYLINDER FUER BREITE HINTERACHSE
CILINDRO DI STERZO PER ASSALE POSTERIORE LARGO
CILINDRO DE DIRECCION PARA EJE TRASERO ANCHO
STYRCYLINDER FOR BRED BAKAXEL

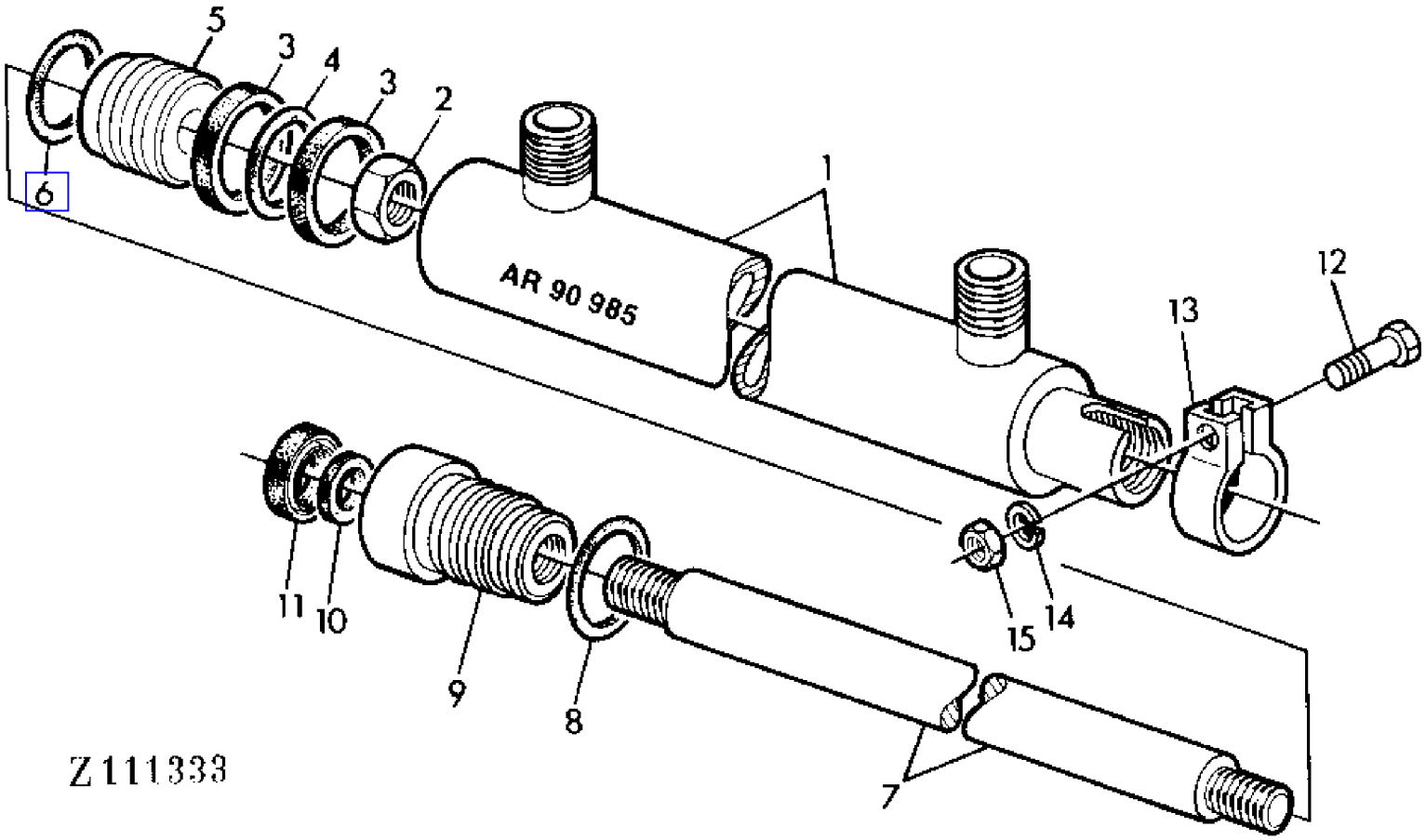

COPYRIGHT©1994 - 2008 DEERE & COMPANY Moline, Illinois All rights reserved

(2C05) STEERING CYLINDER FOR WIDE REAR AXLE
VERIN DE DIRECTION POUR ESSIEU LARGE
LENKZYLINDER FUER BREITE HINTERACHSE
CILINDRO DI STERZO PER ASSALE POSTERIORE LARGO
CILINDRO DE DIRECCION PARA EJE TRASERO ANCHO
STYRCYLINDER FOR BRED BAKAXEL

KEY	PART NO.	PART NAME	QTY	SERIAL NO.		955	REMARKS
1	.....	HYDRAULIC CYLINDER BARREL	1	023198	-	X	NSEP (ORD AZ37520)
2	R69706	LOCK NUT	1	023198	-	X	
3	.....	BACK-UP RING	2	023198	-	X	(ORD AZ37833)
4	.....	O-RING	1	023198	-	X	(ORD AZ37833)
5	.....	PISTON	1	023198	-	X	(ORD AZ37520)
6	.....	O-RING	1	023198	-	X	(ORD AZ37833)
7	.....	ROD	1	023198	-	X	(ORD AZ37520)
8	.....	O-RING	1	023198	-	X	(ORD AZ37833)
9	.....	HYDR. CYLINDER ROD GUIDE	1	023198	-	X	(ORD AZ37520)
10	.....	SEAL	1	023198	-	X	(ORD AZ37833)
11	.....	SCRAPER RING	1	023198	-	X	(ORD AZ37833)
12	19M2930	CAP SCREW	1	023198	-	X	M16X65
13	R66307	CLAMP	1	023198	-	X	
14	12M7069	LOCK WASHER	1	023198	-	X	16MM
15	14M7286	NUT	1	023198	-	X	M16
..	AR90985	HYDRAULIC CYLINDER	1			X	(ORD AZ37520)
..	AZ37833	GASKET KIT	1	023198	-	X	KIT, INCL KEYS (2) 3,4,6,8,10,11 (FOR AR90985)

COPYRIGHT©1994 - 2008 DEERE & COMPANY Moline, Illinois All rights reserved

(2B08) STEERING SHAFT
COLONNE DE DIRECTION
LENKWELLE
ALBERO DI STERZO
EJE DE LA DIRECCION
STYRSPINDEL

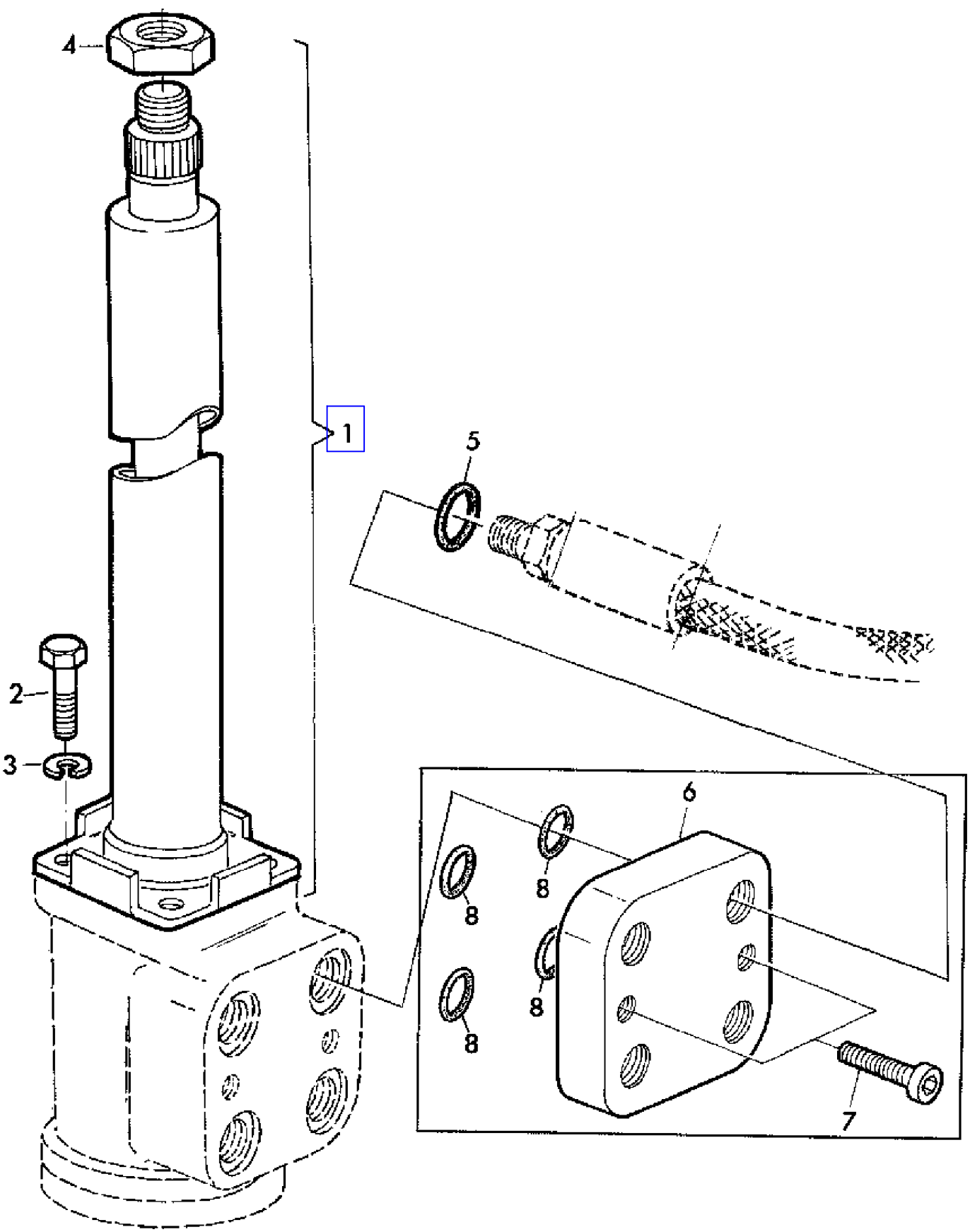

Z 101073

COPYRIGHT©1994 - 2008 DEERE & COMPANY Moline, Illinois All rights reserved

(PC4146) 955 Combine

(2B08) STEERING SHAFT
COLONNE DE DIRECTION
LENKWELLE
ALBERO DI STERZO
EJE DE LA DIRECCION
STYRSPINDEL

KEY	PART NO.	PART NAME	QTY	SERIAL NO.			955	REMARKS
1	AZ20004	DRAG LINK	1		-	019970	X	INCL KEY 4 (ORD AZ28129, Z38823)
	AZ28129	STEERING COLUMN	1	019971	-		X	
2	19H1800	CAP SCREW	4				X	3/8"X1-1/2"
3	12M7013	LOCK WASHER	4				X	10MM
4	14M7209	NUT	1				X	M18X1,5 (W/ DANFOSS OTB750-1505042)
5	R26375	O-RING	4				X	(SUB FOR Z22678)
6	AZ24577	VALVE STACK	1	XXXX	-	005864	X	INCL KEYS 8,10
7	19M7661	SCREW	2	XXXX	-	005864	X	M10X1X40
8	32240	O-RING	4	XXXX	-	005864	X	

COPYRIGHT©1994 - 2008 DEERE & COMPANY Moline, Illinois All rights reserved

(4A13) STONE TRAP/CYLINDER COVER
TRAPPE A PIERRES/PORTE DE VISITE DU BATTEUR
STEINFANGMULDE/DRESCHTROMMELKLAPPE
PARASASSI/PORTELLO ISPEZIONE BATTITORE
ATRAPAPIEDRAS/TAPA DEL REGISTRO DEL CILINDRO DESGRANADOR
STENFICKA/CYLINDERLUCKA

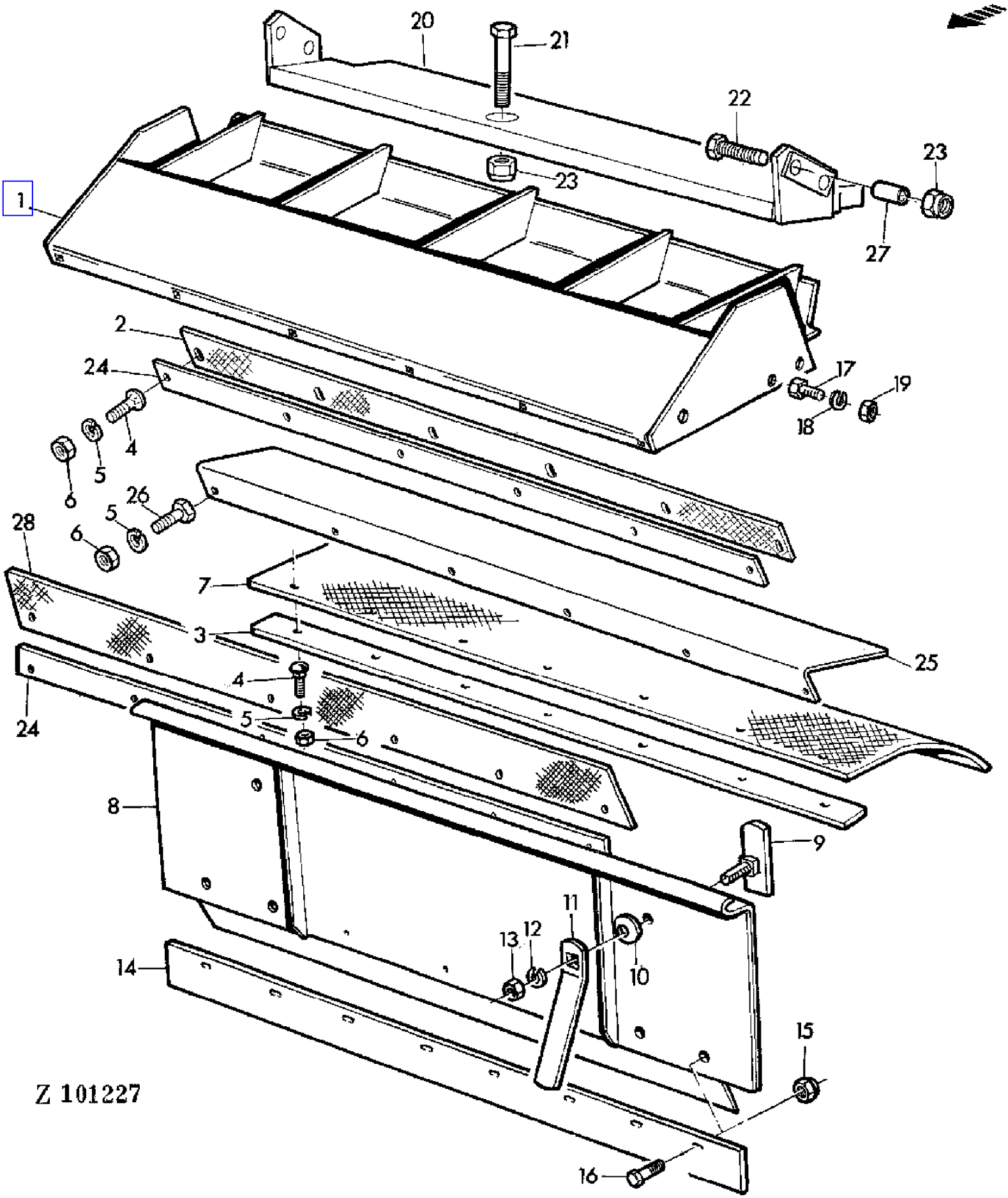

COPYRIGHT©1994 - 2008 DEERE & COMPANY Moline, Illinois All rights reserved

(4A13) STONE TRAP/CYLINDER COVER
TRAPPE A PIERRES/PORTE DE VISITE DU BATTEUR
STEINFANGMULDE/DRESCHTROMMELKLAPPE
PARASASSI/PORTELLO ISPEZIONE BATTITORE
ATRAPAPIEDRAS/TAPA DEL REGISTRO DEL CILINDRO DESGRANADOR
STENFICKA/CYLINDERLUCKA

KEY	PART NO.	PART NAME	QTY	SERIAL NO.		955	REMARKS
1	AZ21122	TROUGH	1			X	
2	Z20125	GASKET	1		- 010731	X	
	Z20125	GASKET	1	025573	-	X	(A)
3	Z20058	STRAP	1			X	
4	03M7068	BOLT	AR			X	M6X20
5	12M7012	LOCK WASHER	AR			X	6MM
6	14M7027	NUT	AR			X	M6
7	Z20123	GASKET	1			X	
8	AZ19208	COVER	1			X	
9	AZ30541	LATCH	2			X	(SUB FOR AZ19207)
10	Z22631	DISK SPRING	4			X	(SUB FOR Z30588)
11	Z40799	LEVER	2			X	(SUB FOR Z30569)
12	12M7014	LOCK WASHER	2			X	12MM
13	14M7031	NUT	2			X	M12
14	Z24275	GASKET	1			X	
15	14M7165	LOCK NUT	AR			X	M6
16	19M7375	CAP SCREW	AR			X	M6X18
17	19M7167	CAP SCREW	4			X	M10X25
18	12M7013	LOCK WASHER	4			X	10MM
19	14M7140	NUT	4			X	M10
20	AZ23560	COVER	1			X	
21	19M7390	CAP SCREW	1			X	M12X75
22	19M7320	CAP SCREW	4			X	M12X55
23	14M7168	LOCK NUT	5			X	M12
24	Z20058	STRAP	1		- 010731	X	
25	Z37900	SHEET	1	010732	- 026722	X	
26	19M7286	CAP SCREW	AR			X	M6X25
27	Z38274	SPACER	4			X	
28	Z38630	BOOT	1		- 025572	X	(A)
	Z38630	BOOT	1		- 026722	X	

(A) FOR FEEDER CONVEYOR LONG
POUR CONVOYEUR D'ALIMENTATION LONG
FUER LANGEN SCHRAEGFOERDERER
PER COLLO ALIMENTATORE LUNGO
PARA ELEVADOR DE MIES LARGO
FOR LANG INMATNINGSELEVATOR

COPYRIGHT©1994 - 2008 DEERE & COMPANY Moline, Illinois All rights reserved

(PC4146) 955 Combine

(2F04) STRAW COVER
CAPOTAGE
STROH-HAUBE
CUFFIA
CAPO DE LA LIMPA
STRASKYDD

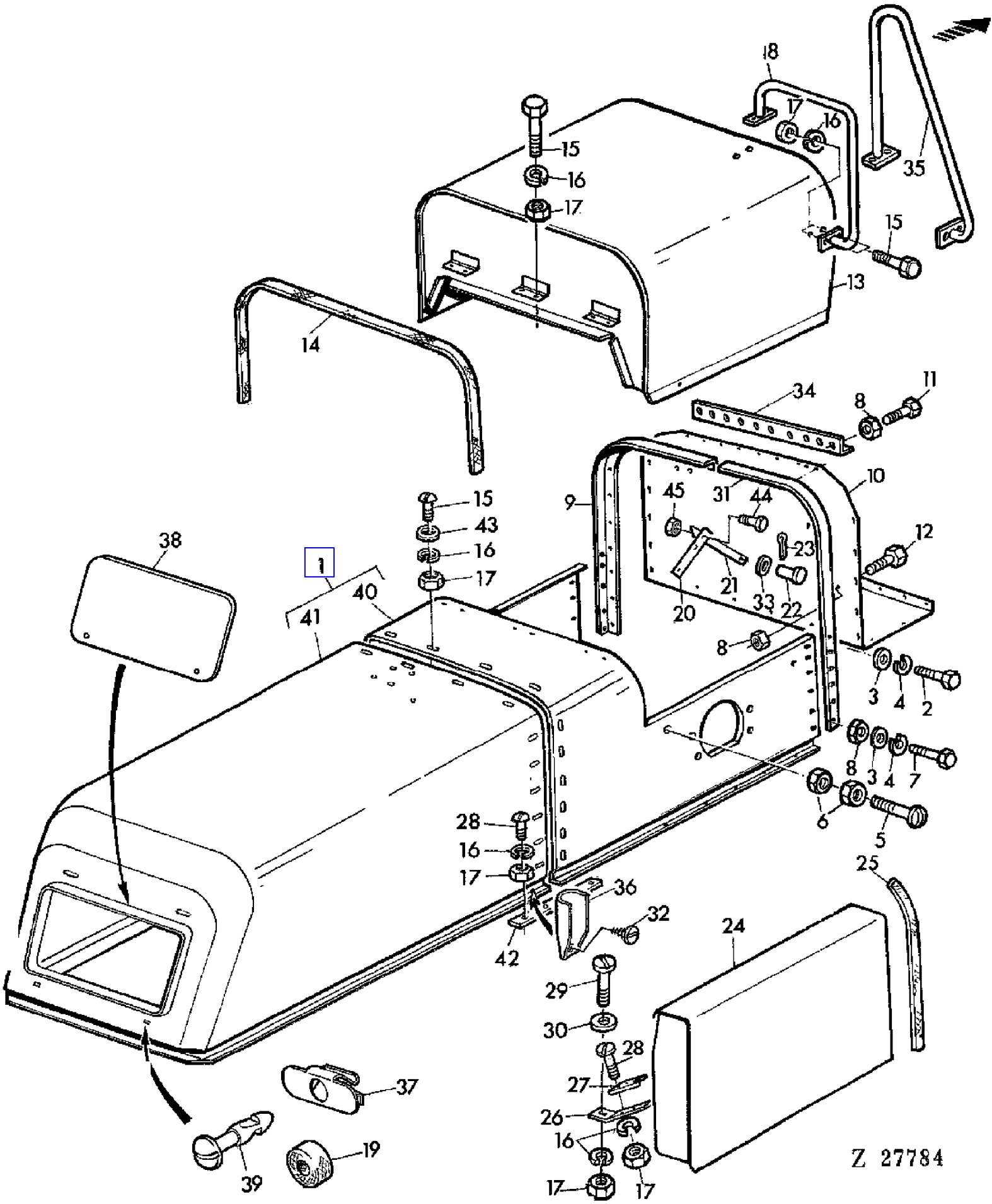

COPYRIGHT©1994 - 2008 DEERE & COMPANY Moline, Illinois All rights reserved

(2F04) STRAW COVER
CAPOTAGE
STROH-HAUBE
CUFFIA
CAPO DE LA LIMPA
STRASKYDD

KEY	PART NO.	PART NAME	QTY	SERIAL NO.			955	REMARKS
1	AZ26923	HOOD	1		-	026422	X	NSEP (ORD AZ25371, AZ25862, Z36465) (SUB FOR AZ23410)
	AZ24943	HOOD	1	026423	-		X	
2	19M7376	CAP SCREW	2				X	M8X22
3	24M7036	WASHER	9				X	9MM
4	12M7008	LOCK WASHER	12				X	8MM
5	21M7093	SCREW	2				X	M10X30
6	14M7140	NUT	4				X	M10
7	19M7284	CAP SCREW	9				X	M8X18
8	14M7029	NUT	24				X	M8
9	AZ19527	FRAME	1				X	LH
10	Z30925	PANEL	1				X	
11	19M7139	CAP SCREW	23				X	M8X20
12	19M7163	CAP SCREW	AR				X	M8X25
13	AZ19514	HOOD	1				X	
14	Z30994	GUARD	1				X	(SUB FOR Z30993)
15	19M7375	CAP SCREW	AR				X	M6X18
16	12M7012	LOCK WASHER	AR				X	6MM
17	14M7027	NUT	AR				X	M6
18	AZ20631	HANDRAIL	1				X	
19	Z34333	GROMMET	2				X	
20	AZ19897	ARRESTOR	1				X	
21	Z30922	ARRESTOR	1				X	
22	45M7019	PIN	2				X	10X14X10MM
23	11M7013	COTTER PIN	3				X	3X20MM
24	AZ21766	GUARD	1		-	026422	X	INCL KEY 25
	AZ24937	GUARD	1	026423	-		X	
25	Z37777	GUARD	1				X	(SUB FOR Z30991)
26	Z32798	BRACKET	2				X	
27	Z24277	HOLDER	2				X	
28	21M7085	SCREW	4				X	M6X20
29	21M7159	SCREW	2				X	M6X25
30	Z26250	WASHER	2				X	
31	AZ19526	FRAME	1				X	RH
32	37M7029	SCREW	AR				X	5,5X13MM
33	24M7028	WASHER	1				X	10,5MM
34	Z33545	ANGLE	AR				X	(A)
35	AZ21759	HANDRAIL	AR				X	
36	Z33433	GUARD	AR				X	
37	Z34332	LATCH	2				X	

(A) FOR TOP-SACKER ONLY
UNIQUEMENT ENSACHEUR SUPERIEUR
NUR FUER OBERE ABSACKPLATTFORM
SOLTANTO PER INSACCATORE SUPERIORE
SOLO PARA ENSACADOR SUPERIOR
ENDAST FOR OVRE SACKNINGSPLATTFORM

COPYRIGHT©1994 - 2008 DEERE & COMPANY Moline, Illinois All rights reserved

(PC4146) 955 Combine

(2F04) STRAW COVER
CAPOTAGE
STROH-HAUBE
CUFFIA
CAPO DE LA LIMPA
STRASKYDD

KEY	PART NO.	PART NAME	QTY	SERIAL NO.		955	REMARKS
38	AZ23016	COVER	1			X	
39	Z34331	LATCH	2			X	
40	AZ25862	HOOD	1		- 026422	X	
	AZ27883	HOOD	1	026423	-	X	
41	AZ25371	HOOD	1			X	
42	AZ26641	STEEL	2			X	
43	24M7088	WASHER	AR			X	
44	21M7190	SCREW	1			X	M10X25
45	14M7167	LOCK NUT	1			X	M10

(A) FOR TOP-SACKER ONLY
UNIQUEMENT ENSACHEUR SUPERIEUR
NUR FUER OBERE ABSACKPLATTFORM
SOLTANTO PER INSACCATORE SUPERIORE
SOLO PARA ENSACADOR SUPERIOR
ENDAST FOR OVRE SACKNINGSPLATTFORM

COPYRIGHT©1994 - 2008 DEERE & COMPANY Moline, Illinois All rights reserved

(4G02) STRAW SPREADER BLADES
EPARPILLEUR DE PAILLE,PALETTES
STROH-STREUER SCHLAEGER
LANCIA-PAGLIA,ELEMENTO LANCIATORE
ESPARCIDOR DE PAJA,MAYALES
HALMSPRIDARENS BLAD

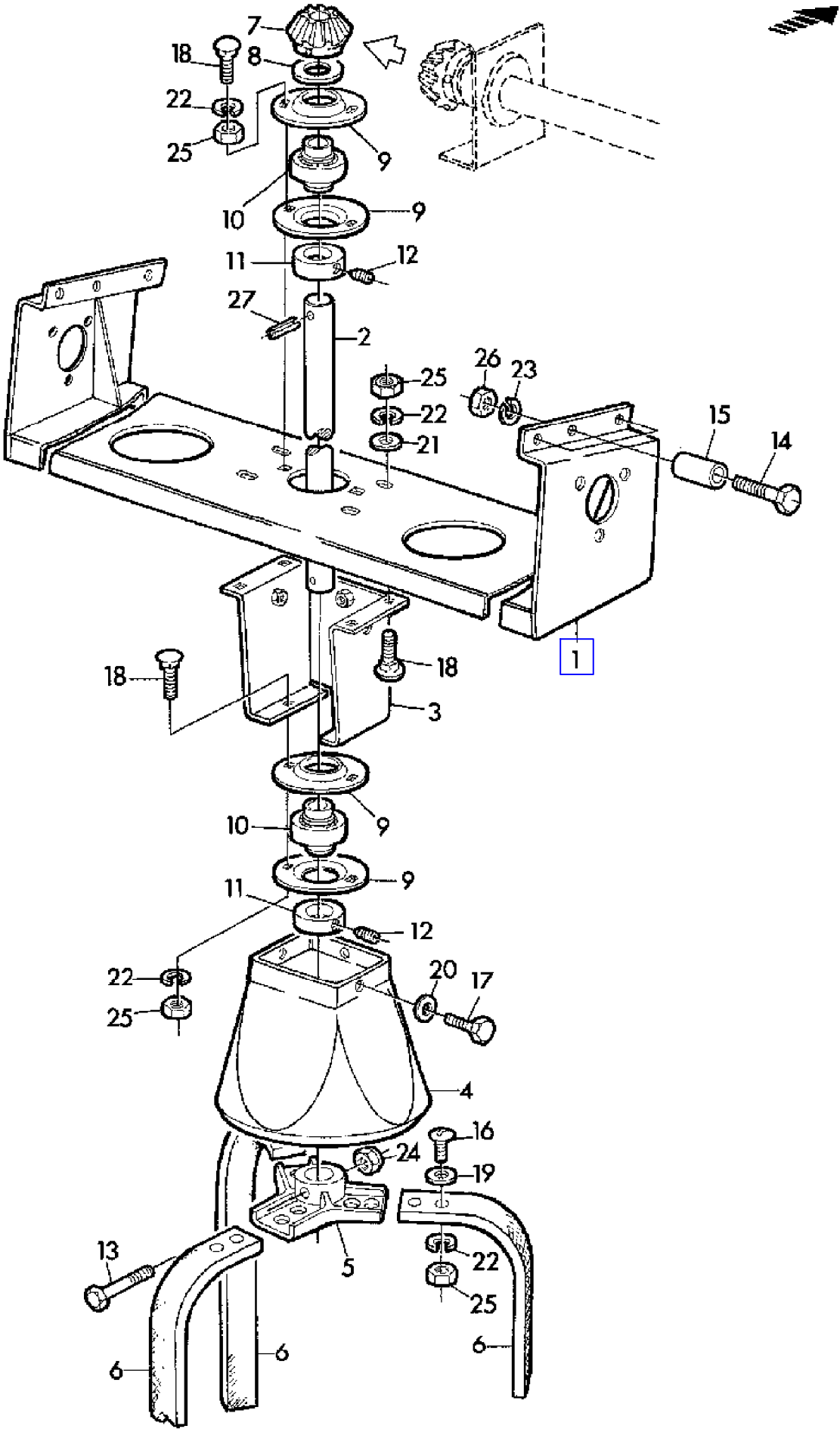

COPYRIGHT©1994 - 2008 DEERE & COMPANY Moline, Illinois All rights reserved

(4G02) STRAW SPREADER BLADES
EPARPILLEUR DE PAILLE,PALETTES
STROH-STREUER SCHLAEGER
LANCIA-PAGLIA,ELEMENTO LANCIATORE
ESPARCIDOR DE PAJA,MAYALES
HALMSPRIDARENS BLAD

KEY	PART NO.	PART NAME	QTY	SERIAL NO.	955	REMARKS
1	AZ22700	BRACKET	1		X	(A)
2	H83793	SHAFT	1		X	(A)
3	AZ22696	RETAINER	1		X	(A)
4	H83795	GUARD	1		X	(A)
5	H84934	SPIDER	1		X	(A)
6	H76933	BLADE	3		X	(A)
7	H91228	GEAR	1		X	(A) (SUB FOR H85869)
8	24H1433	WASHER	1		X	(A) 29/32"X2-1/4"X.250"
9	P44439	PRESSED FLANGED HOUSING	2		X	(A)
10	JD9442	BALL BEARING	2		X	(A)
11	JD8563	ECCENTRIC LOCKING COLLAR	2		X	(A) INCL KEY 12
12	AZ19843	SET SCREW	2		X	(A) KIT
13	19M7269	CAP SCREW	1		X	(A) M8X50
14	19M7287	CAP SCREW	AR		X	(A) M10X50
15	Z29770	SPACER	AR		X	(A)
16	21M7126	SCREW	AR		X	(A) M8X35
17	19M7159	CAP SCREW	AR		X	(A) M6X16
18	03M7128	BOLT	AR		X	(A) M8X20
19	24M7024	WASHER	AR		X	(A)
20	Z26250	WASHER	AR		X	(A) 6,5X16X1,5MM
21	24M7036	WASHER	AR		X	(A) 9MM
22	12M7008	LOCK WASHER	AR		X	(A) 8MM
23	12M7013	LOCK WASHER	AR		X	(A) 10MM
24	14M7166	LOCK NUT	AR		X	(A) M8
25	14M7029	NUT	AR		X	(A) M8
26	14M7140	NUT	AR		X	(A) M10
27	34M7046	SPRING PIN	1		X	(A) 8X36MM

(A) OPEN DRIVE
ENTRAINEMENT OUVERT
OFFENES GETRIEBE
TIPO SENZA SCATOLA
TRANSMISION POR PINONES SIN CARCASA
OPPEN DRIVNING

COPYRIGHT©1994 - 2008 DEERE & COMPANY Moline, Illinois All rights reserved

(4F24) STRAW SPREADER DRIVE
EPARPILLEUR DE PAILLE,ENTRAINEMENT
STROH-STREUER-ANTRIEB
COMANDO,LANCIA-PAGLIA
ESPARCIDOR DE PAJA,TRANSMISION
HALMSPRIDARENS DRIVNING

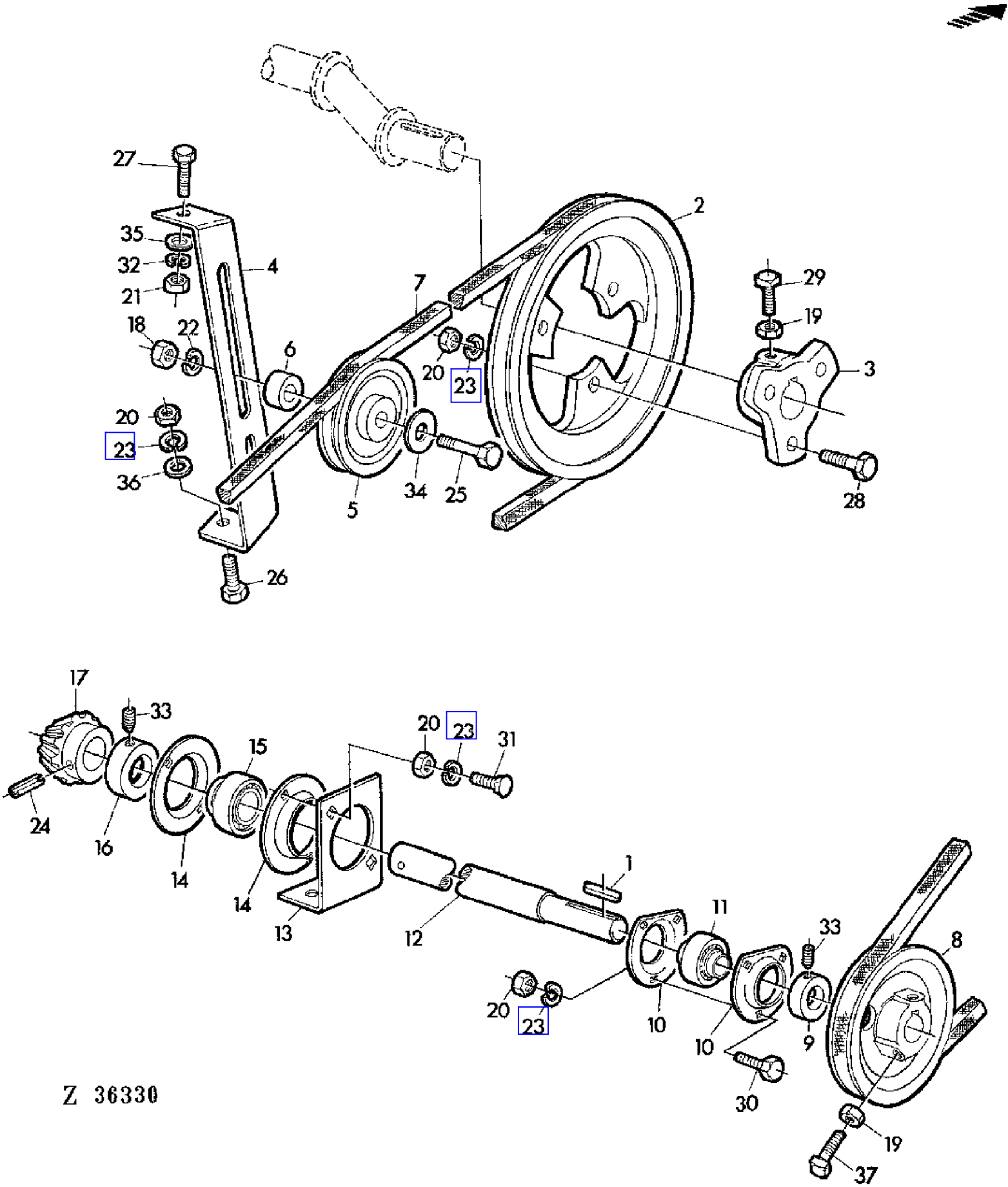

COPYRIGHT©1994 - 2008 DEERE & COMPANY Moline, Illinois All rights reserved

(4F24) STRAW SPREADER DRIVE
EPARPILLEUR DE PAILLE,ENTRAINEMENT
STROH-STREUER-ANTRIEB
COMANDO,LANCIA-PAGLIA
ESPARCIDOR DE PAJA,TRANSMISION
HALMSPRIDARENS DRIVNING

KEY	PART NO.	PART NAME	QTY	SERIAL NO.	955	REMARKS
1	49M4821	SHAFT KEY	1		X	(A) 6X6X32MM
2	Z10860	PULLEY	1		X	(A)
3	Z10859	HUB	1		X	(A)
4	Z32038	HOLDER	1		X	(A)
5	AP24917	IDLER	1		X	(A)
6	Z22659	SPACER	1		X	(A)
7	Z33774	BELT	1		X	(A)
8	Z10262	SHEAVE	1		X	(A)
9	AZ13117	ECCENTRIC LOCKING COLLAR	1		X	(A) INCL KEY 33
10	Z23787	PRESSED FLANGED HOUSING	2		X	(A)
11	JD39108	BALL BEARING	1		X	(A)
12	Z33732	SHAFT	1		X	(A) (SUB FOR Z32780)
13	Z36862	BRACKET	1		X	(A) (SUB FOR H83797)
14	P44439	PRESSED FLANGED HOUSING	2		X	(A)
15	JD8562	BALL BEARING	1		X	(A)
16	JD8563	ECCENTRIC LOCKING COLLAR	1		X	(A) INCL KEY 33
17	H91228	GEAR	1		X	(A) (SUB FOR H85869)
18	14M7142	NUT	1		X	(A) M16
19	14M7152	NUT	AR		X	(A) M10
20	14M7029	NUT	AR		X	(A) M8
21	14M7027	NUT	AR		X	(A) M6
22	12M7017	LOCK WASHER	1		X	(A) 16MM
23	12M7008	LOCK WASHER	AR		X	(A) 8MM
24	34M7046	SPRING PIN	1		X	(A) 8X36MM
25	19M6754	CAP SCREW	1		X	(A) M16X75
26	19M7163	CAP SCREW	AR		X	(A) M8X25
27	19M7286	CAP SCREW	AR		X	(A) M6X25
28	19M7288	CAP SCREW	AR		X	(A) M8X30
29	Z32433	SET SCREW	AR		X	(A) 10X30MM
30	19M7139	CAP SCREW	AR		X	(A) M8X20
31	03M7128	BOLT	AR		X	(A) M8X20
32	12M7012	LOCK WASHER	1		X	(A) 6MM
33	AZ19843	SET SCREW	AR		X	(A) KIT
34	24M7049	WASHER	1		X	(A) 18MM
35	Z26250	WASHER	AR		X	(A) 6,5X16X1,5MM
36	24M7036	WASHER	1		X	(A) 9MM
37	Z26249	SET SCREW	2		X	(A) 10X22MM

(A) OPEN DRIVE
ENTRAINEMENT OUVERT
OFFENES GETRIEBE
TIPO SENZA SCATOLA
TRANSMISION POR PINONES SIN CARCASA
OPPEN DRIVNING

COPYRIGHT©1994 - 2008 DEERE & COMPANY Moline, Illinois All rights reserved

(4G04) STRAW SPREADER GUARDS
EPARPILLEUR DE PAILLE,GARANTS
STROH STREUER SCHUTZE
LANCIA-PAGLIA,DIFESE
ESPARCIDOR DE PAJA,PROTECCION
HALMSPRIDARENS SKYDD

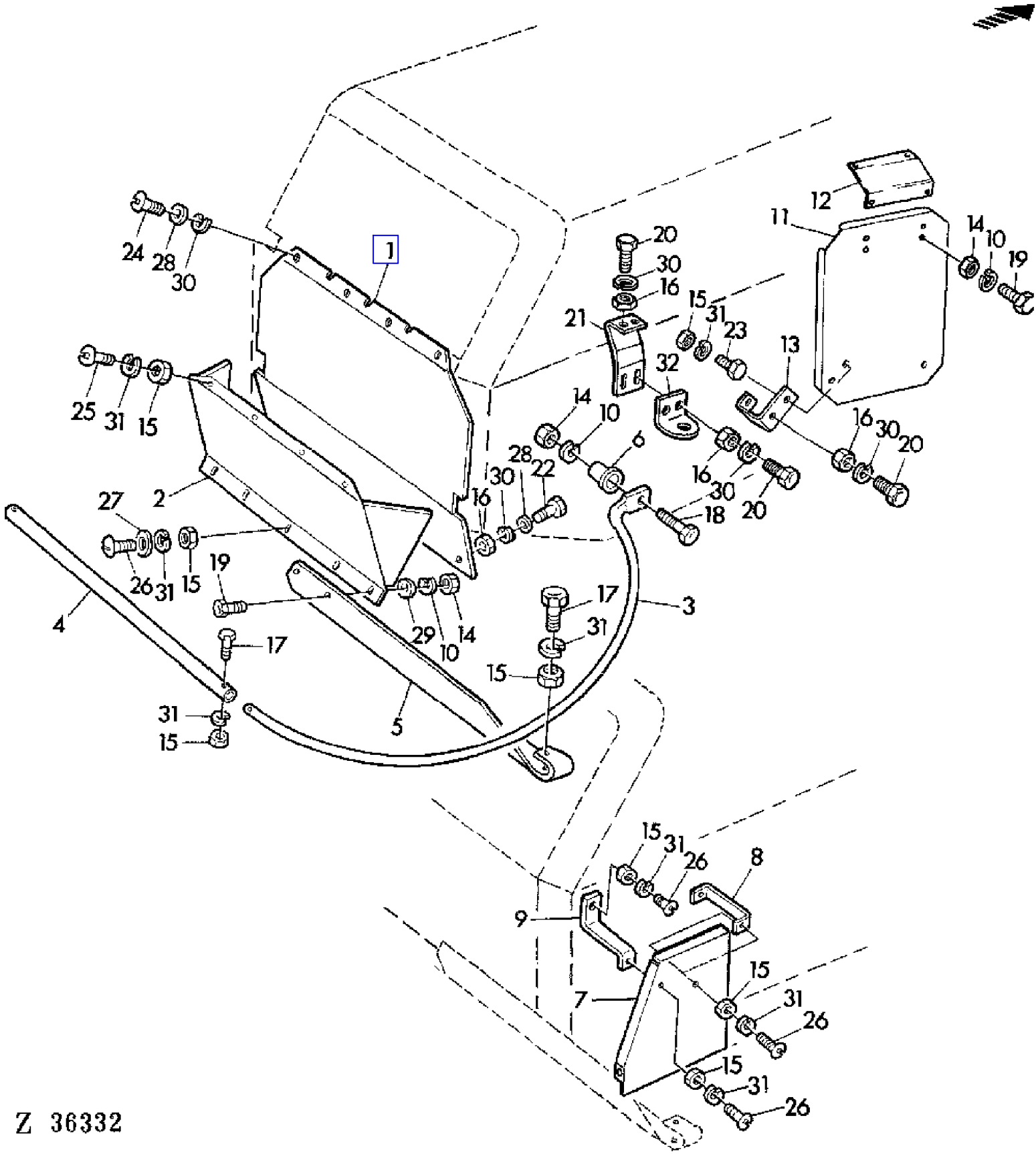

COPYRIGHT©1994 - 2008 DEERE & COMPANY Moline, Illinois All rights reserved

(PC4146) 955 Combine

(4G04) STRAW SPREADER GUARDS
EPARPILLEUR DE PAILLE,GARANTS
STROH STREUER SCHUTZE
LANCIA-PAGLIA,DIFESE
ESPARCIDOR DE PAJA,PROTECCION
HALMSPRIDARENS SKYDD

KEY	PART NO.	PART NAME	QTY	SERIAL NO.	955	REMARKS
1	AZ22701	DEFLECTOR	1		X	
2	Z33729	COVER	1		X	
3	Z33720	GUARD	2		X	
4	Z33726	GUARD	1		X	
5	Z30284	HOLDER	1		X	LH
	Z30285	HOLDER	1		X	RH
6	Z29770	SPACER	2		X	
7	AZ23905	GUARD	1		X	
8	Z32035	RETAINER	1		X	
9	Z34881	HOLDER	1		X	
10	12M7013	LOCK WASHER	AR		X	10MM
11	Z32786	GUARD	1		X	
12	Z23790	GUARD	1		X	
13	Z32773	HOLDER	1		X	
14	14M7140	NUT	AR		X	M10
15	14M7027	NUT	AR		X	M6
16	14M7029	NUT	AR		X	M8
17	19M7320	CAP SCREW	AR		X	M6X40
18	19M7328	CAP SCREW	AR		X	M10X70
19	19M7167	CAP SCREW	AR		X	M10X25
20	19M7139	CAP SCREW	AR		X	M8X20
21	Z35495	HOLDER	2		X	
22	19M7162	CAP SCREW	AR		X	M8X16
23	19M7159	CAP SCREW	AR		X	M6X15
24	21M7081	SCREW	AR		X	M8X15
25	21M7087	SCREW	AR		X	M6X12
26	21M7031	SCREW	AR		X	M6X15
27	Z26250	WASHER	AR		X	65X16X1,5MM
28	24M7036	WASHER	AR		X	9MM
29	24M7040	WASHER	AR		X	11MM
30	12M7008	LOCK WASHER	AR		X	8MM
31	12M7012	LOCK WASHER	AR		X	6MM
32	Z23089	ARRESTOR	2		X	

COPYRIGHT©1994 - 2008 DEERE & COMPANY Moline, Illinois All rights reserved

(4B12) STRAW WALKER
SECOUEUR
STROHSCHUETTLER
SCUOTIPAGLIA
SACUDIDOR DE PAJA
HALMSKAKARE

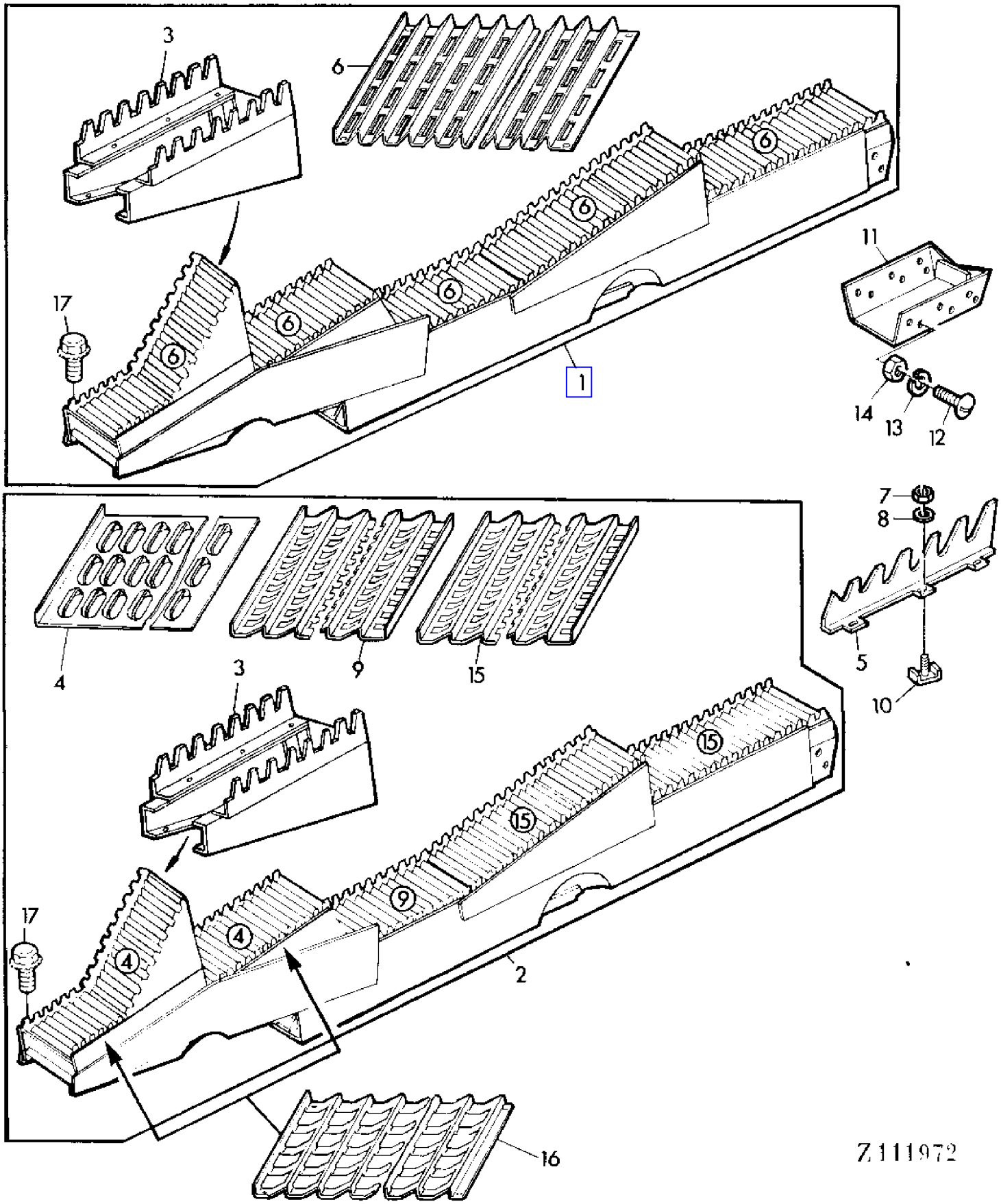

COPYRIGHT©1994 - 2008 DEERE & COMPANY Moline, Illinois All rights reserved

(4B12) STRAW WALKER
SECOUEUR
STROHSCHUETTLER
SCUOTIPAGLIA
SACUDIDOR DE PAJA
HALMSKAKARE

KEY	PART NO.	PART NAME	QTY	SERIAL NO.			955	REMARKS
1	AZ27828	STRAW WALKER	4		-	036702	X	(B) (ORD AZ35361, AZ36297)
	AZ36297	STRAW WALKER	4	036703	-		X	(B) (SUB FOR AZ33591)
2	AZ27890	STRAW WALKER	4		-	036702	X	(C) (ORD AZ35361, AZ36296)
	AZ36296	STRAW WALKER	4	036703	-		X	(C) (SUB FOR AZ33590)
3	AZ26980	STRAW WALKER	1				X	
4	Z36520	STRAW WALKER GRID	2				X	
5	Z42876	FISHBACK	4				X	(SUB FOR H33395)
6	Z38552	STRAW WALKER GRID	5				X	(B)
7	14M7165	LOCK NUT	AR				X	M6
8	Z26250	WASHER	AR				X	
9	Z42623	STRAW WALKER GRID	1				X	(C)
10	AZ13818	ANCHOR	12				X	
11	Z20048	EXTENSION	4				X	
12	21M7087	SCREW	AR				X	M6X12
13	12M7012	LOCK WASHER	AR				X	6MM
14	14M7027	NUT	AR				X	M6
15	Z34382	STRAW WALKER GRID	2				X	(C) (ORD Z42623)
16	Z30420	STRAW WALKER GRID	2				X	(A)
17	Z42161	SCREW	AR				X	(FOR AZ36296, AZ36297)
	Z38459	CAP SCREW	AR				X	(FOR AZ27828, AZ27890, AZ33590, AZ33591)

(A) CORN-COB MIX
GRAINS ET CAROTTES MELANGES
KOERNER-SPINDELGEMISCH
GRANOTURCO IN GRANI
MEZCLA DE GRANOS Y ZUROS
MAJSBLANDNING

(B) RICE,GRAIN
RIZ,CEREALES
REIS,GETREIDE
RISO,GRANO
ARROZ,CEREALES
RIS,SAED

(C) CORN,GRAIN
MAIS,CEREALES
MAIS,GETREIDE
GRANOTURCO,GRANO
MAIZ,CEREALES
MAJS,SAED

COPYRIGHT©1994 - 2008 DEERE & COMPANY Moline, Illinois All rights reserved

(4B20) STRAW WALKER AND LOWER CHAFFER BOARD DRIVE
ENTRAINEMENT SECOUEURS ET CAISSON SASSEUR
STROHSCHUETTLER-UND SCHUETTELKASTEN-ANTRIEB
COMANDO SCUOTIPAGLIA E CASSONE
TRANSMISION PARA SACUDIDORES DE PAJA Y CAJA DE CRIBAS
DRIVNING AV HALMSKAKARE OCH SALLADAN

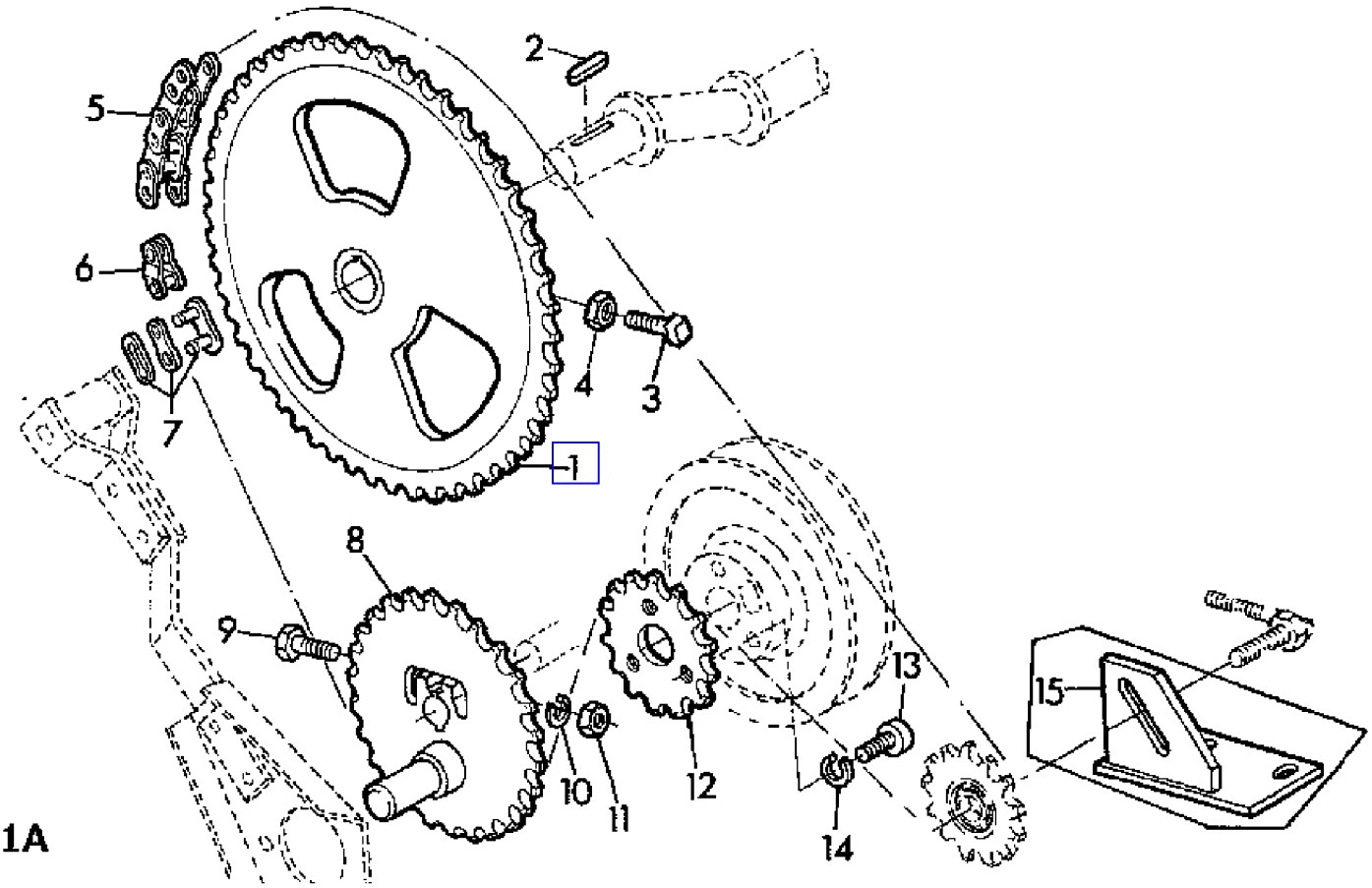

COPYRIGHT©1994 - 2008 DEERE & COMPANY Moline, Illinois All rights reserved

(4B20) STRAW WALKER AND LOWER CHAFFER BOARD DRIVE
ENTRAINEMENT SECOUEURS ET CAISSON SASSEUR
STROHSCHUETTLER-UND SCHUETTELKASTEN-ANTRIEB
COMANDO SCUOTIPAGLIA E CASSONE
TRANSMISION PARA SACUDIDORES DE PAJA Y CAJA DE CRIBAS
DRIVNING AV HALMSKAKARE OCH SALLADAN

KEY	PART NO.	PART NAME	QTY	SERIAL NO.	955	REMARKS
1	Z10025	CHAIN SPROCKET	1		X	Z = 63
	AZ29791	CHAIN SPROCKET	1		X	(A) Z = 56 (SUB FOR AZ24649, Z11042)
2	49M4836	SHAFT KEY	1		X	8X7X45MM
3	Z32433	SET SCREW	2		X	
4	14M7152	NUT	2		X	M10
5	AZ10279	LINK CHAIN	1		X	L = 122, ASSY, INCL KEYS 6,7
6	AZ12882	LINK	1		X	
7	AL14209	LINK	1		X	
8	Z11379	CRANK	1		X	Z = 33
9	19M7287	CAP SCREW	1		X	M10X50
10	12M7013	LOCK WASHER	1		X	10MM
11	14M7140	NUT	3		X	M10
12	Z30028	CHAIN SPROCKET	1		X	Z = 16
13	19M7555	SCREW	3		X	M8X30
14	12M7008	LOCK WASHER	3		X	8MM
15	AZ23867	BRACKET	1	- 011231	X	

(A) FOR COMBINES WITH STRAW COLLECTOR ONLY
UNIQUEMENT POUR MB AVEC COLLECTEUR DE PAILLE
NUR FUER MD MIT STROHSAMMLER
SOLO PER MIETITR.CON COLLETTORE DI PAGLIA
SOLO PARA COSECHADORAS CON RECOGEDOR DE PAJA
ENDAST FOR SKORDETROSKA MED HALMSAMLARE

COPYRIGHT©1994 - 2008 DEERE & COMPANY Moline, Illinois All rights reserved

(4B16) STRAW WALKER SHAFT,FRONT
ARBRE AVANT DES SECOUEURS
STROHSCHUETTLER-WELLE,VORN
ALBERO SCUOTIPAGLIA ANTERIORE
CIGUENAL DELANTERO DE LOS SACUDIDORES DE PAJA
FRAMRE HALMSKAKARAXEL

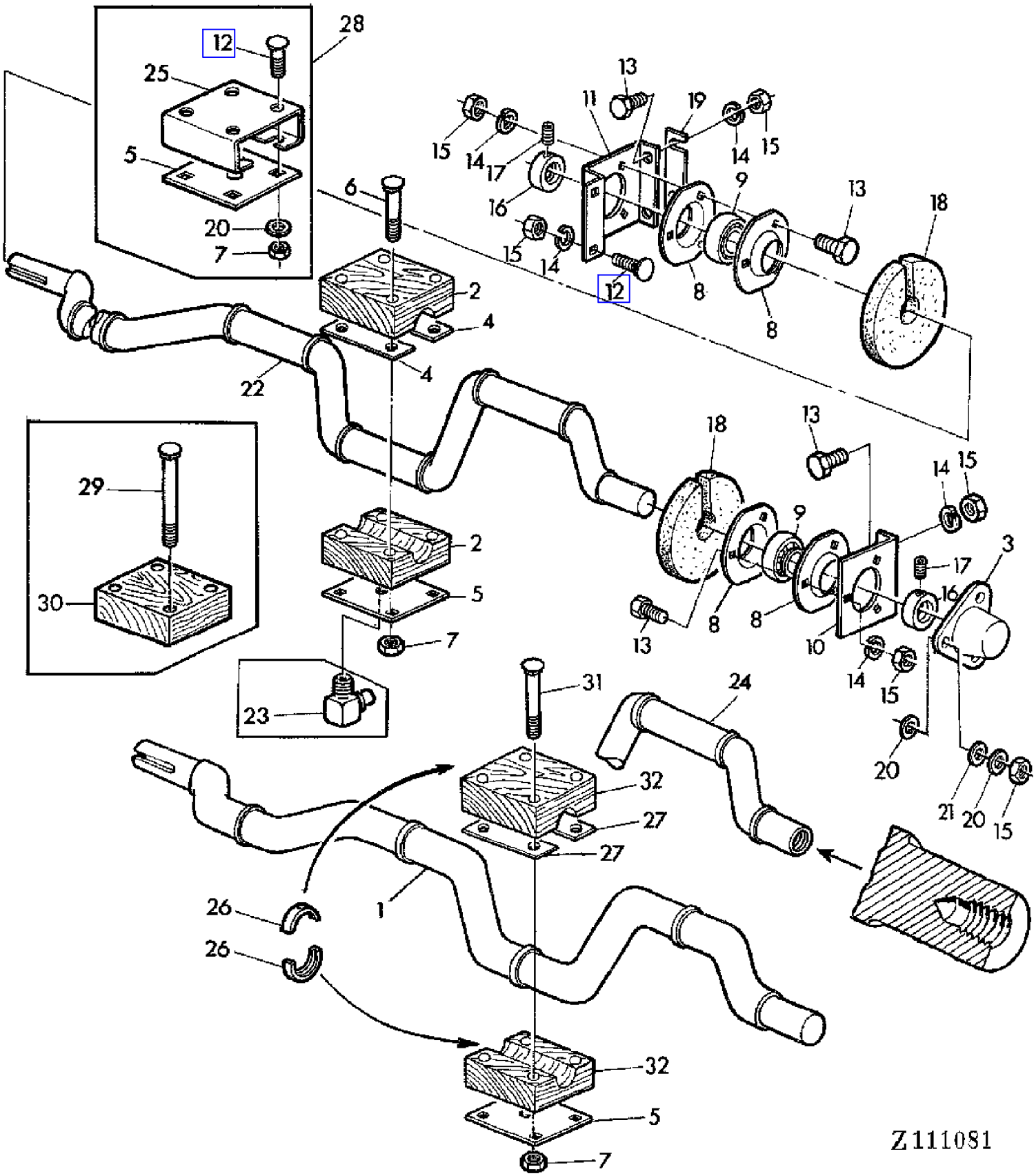

COPYRIGHT©1994 - 2008 DEERE & COMPANY Moline, Illinois All rights reserved

(4B16) STRAW WALKER SHAFT,FRONT
ARBRE AVANT DES SECOUEURS
STROHSCHUETTLER-WELLE,VORN
ALBERO SCUOTIPAGLIA ANTERIORE
CIGUENAL DELANTERO DE LOS SACUDIDORES DE PAJA
FRAMRE HALMSKAKARAXEL

KEY	PART NO.	PART NAME	QTY	SERIAL NO.	955	REMARKS
1	AZ36245	CRANKSHAFT	1		X	OD = 38 MM (SUB FOR AZ29300, AZ35384)
2	AZ31216	BEARING	4		X	KIT, ID = 35 MM (SUB FOR AZ21612)
3	Z38380	GUARD	1		X	(SUB FOR Z31792, Z35647)
4	Z32891	STRAP	18		X	(FOR AZ31216)
5	Z52070	PLATE	AR		X	(SUB FOR Z20040, Z37922)
6	03M7151	BOLT	AR		X	M10X80
7	14M7167	LOCK NUT	16		X	M10
8	Z38395	PRESSED FLANGED HOUSING	4		X	(SUB FOR P45502)
9	JD39103	BALL BEARING	2		X	(SUB FOR JD39106)
10	Z20051	BRACKET	1		X	
11	Z20052	BRACKET	1		X	
12	03M7088	BOLT	AR		X	M10X20
13	19M7167	CAP SCREW	10		X	M10X25
14	12M7013	LOCK WASHER	12		X	10MM
15	14M7140	NUT	18		X	M10
16	AZ10045	ECCENTRIC LOCKING COLLAR	2		X	ASSY, INCL KEY 17
17	AZ19844	SET SCREW	2		X	KIT
18	Z22701	FOAM PAD	2		X	
19	Z24983	STRAP	AR		X	
20	24M7040	WASHER	AR		X	11MM
21	24M7037	WASHER	3		X	9MM
22	.....	CRANKSHAFT	1		X	OD = 35 MM, OD = 38 MM (ORD (4) AZ31217, AZ36245, (16) Z40205, (16) Z40787)
23	58M7008	LUBRICATION FITTING	8		X	AR, M8X1
24	AZ29928	CRANKSHAFT	1		X	(A) OD = 35 MM (SUB FOR AZ21576)
25	Z44677	BRACKET	4	- 036702	X	(FOR AZ33590, AZ33591, AZ36296, AZ36297)
26	Z39428	GUIDE	8		X	
27	Z40787	SHIM	AR		X	(FOR AZ31217) (SUB FOR Z37925)
28	AZ35361	SUPPORT	4	- 036702	X	(FOR AZ33590, AZ33591, AZ36296, AZ36297)
29	03M7289	BOLT	AR	- 036702	X	M10X130
30	Z42333	HALF CLAMP	AR	- 036702	X	(ORD AZ35361)
31	Z40205	BOLT	16		X	M10X85
32	AZ31217	BEARING	4		X	KIT, OD = 38 MM, INCL KEY 26 (SUB FOR AZ28804, AZ30510)

(A) SHAFT WITH THREADED BORE FOR THRESHING HOURMETER
ARBRE AVEC TROU FILETE POUR COMPTEUR D'HEURES DE BATTAGE
WELLE MIT GEWINDELOCH FUER HUBODOMETER
ALBERO CON FORO FILETT.PER CONTAORE DELLA TREBBIATURA
EJE CON TALADRO ROSC.PARA CONTADOR DE HORAS DE TRILLA
AXEL MED GANGAD BORRNING FOR TROSKTIMMATARE

COPYRIGHT©1994 - 2008 DEERE & COMPANY Moline, Illinois All rights reserved

(4B18) STRAW WALKER SHAFT,REAR
ARBRE ARRIERE DES SECOUEURS
STROHSCHUETTLER-WELLE,HINTEN
ALBERO SCUOTIPAGLIA POSTERIORE
CIGUENAL TRASERO DE LOS SACUDIDORES DE PAJA
BAKRE HALMSKAKARAXEL

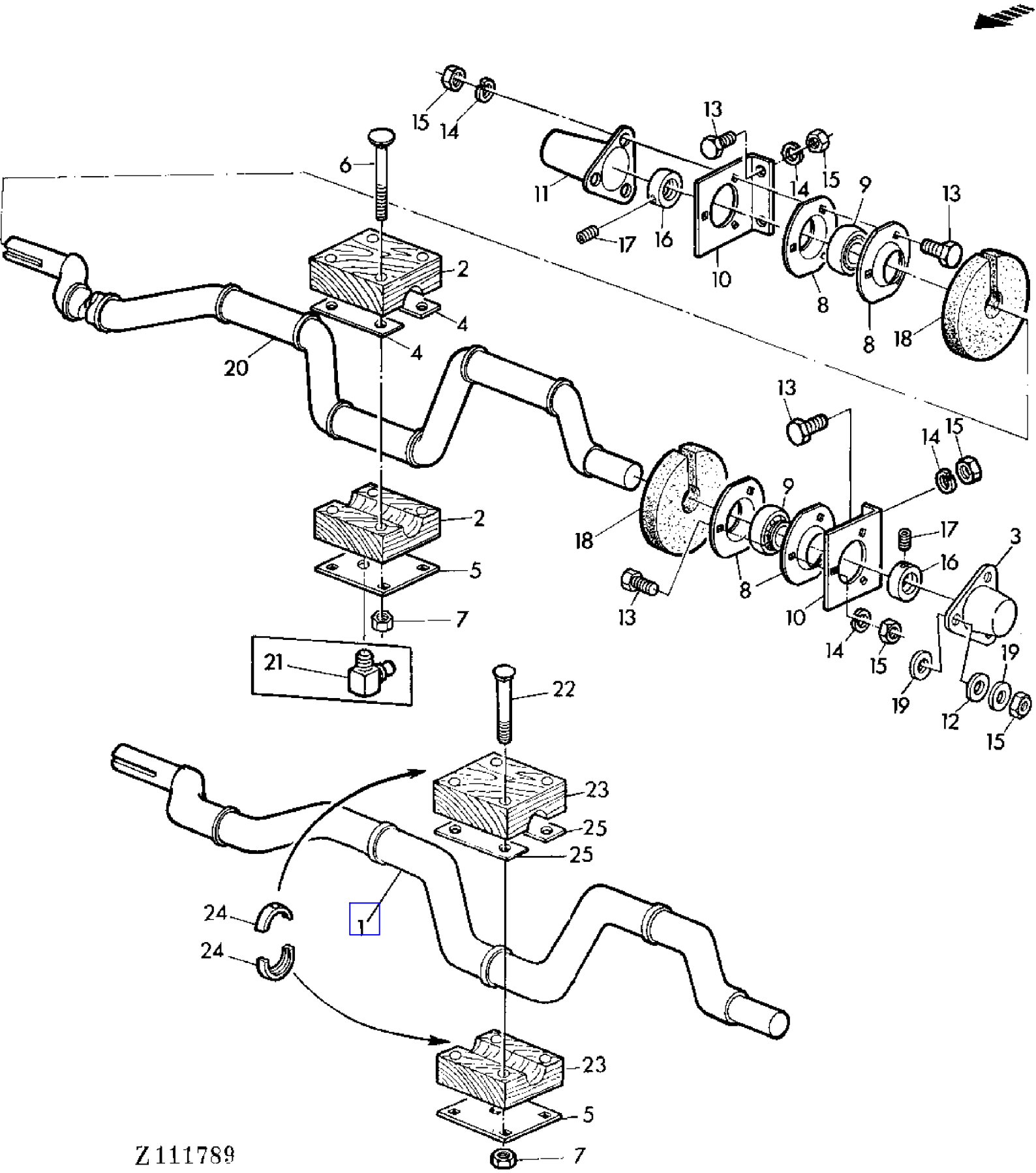

COPYRIGHT©1994 - 2008 DEERE & COMPANY Moline, Illinois All rights reserved

(4B18) STRAW WALKER SHAFT,REAR
ARBRE ARRIERE DES SECOUEURS
STROHSCHUETTLER-WELLE,HINTEN
ALBERO SCUOTIPAGLIA POSTERIORE
CIGUENAL TRASERO DE LOS SACUDIDORES DE PAJA
BAKRE HALMSKAKARAXEL

KEY	PART NO.	PART NAME	QTY	SERIAL NO.	955	REMARKS
1	AZ36245	CRANKSHAFT	1		X	OD = 38 MM (SUB FOR AZ29300, AZ35384)
2	AZ31216	BEARING	4		X	KIT, ID = 35 MM (SUB FOR AZ21612)
3	Z38380	GUARD	AR		X	(SUB FOR Z31792, Z35647)
4	Z32891	STRAP	18		X	(FOR AZ31216)
5	Z52070	PLATE	4		X	(SUB FOR Z20040, Z37922)
	Z20040	PLATE	4		X	
6	03M7105	BOLT	AR		X	M10X75
7	14M7167	LOCK NUT	16		X	M10
8	Z38395	PRESSED FLANGED HOUSING	4		X	(SUB FOR P45502)
9	JD39103	BALL BEARING	2		X	
10	Z20051	BRACKET	2		X	
11	Z38379	GUARD	1		X	(SUB FOR Z26194)
12	24M7037	WASHER	3		X	9MM
13	19M7167	CAP SCREW	10		X	M10X25
14	12M7013	LOCK WASHER	10		X	10MM
15	14M7140	NUT	13		X	M10
16	AZ10045	ECCENTRIC LOCKING COLLAR	2		X	ASSY, INCL KEY 17
17	AZ19844	SET SCREW	2		X	KIT
18	Z22701	FOAM PAD	2		X	
19	24M7040	WASHER	6		X	11MM
20	.....	CRANKSHAFT	1		X	OD = 35 MM (ORD AZ36245 W/ (4) AZ31217, (16) Z40205, (16) Z40787)
21	58M7008	LUBRICATION FITTING	8		X	AR, M8X1
22	Z40205	BOLT	16		X	M10X85
23	AZ31217	BEARING	4		X	KIT, OD = 38 MM, INCL KEY 24 (SUB FOR AZ28804, AZ30510)
24	Z39428	GUIDE	8		X	
25	Z40787	SHIM	AR		X	(FOR AZ31217) (SUB FOR Z37925)

COPYRIGHT©1994 - 2008 DEERE & COMPANY Moline, Illinois All rights reserved

(1F15) STRAW WALKER WARNING DEVICE FOR CROSS SHAKER
AVERTISSEUR DE BOURRAGE DU SECOUEUR ROTATIF
STROHWARNANLAGE FUER QUERSCHUETTLER
AVVISATORE INGOLFAMENTO DEL SCUOTITORE TRASVERSALE
ALARMA PARA ATASCOS DE PAJA EN EL SACUDIDOR TRANSVERSAL
VARNINGSANORDNING FOR STOPP I TVARSKAKAREN

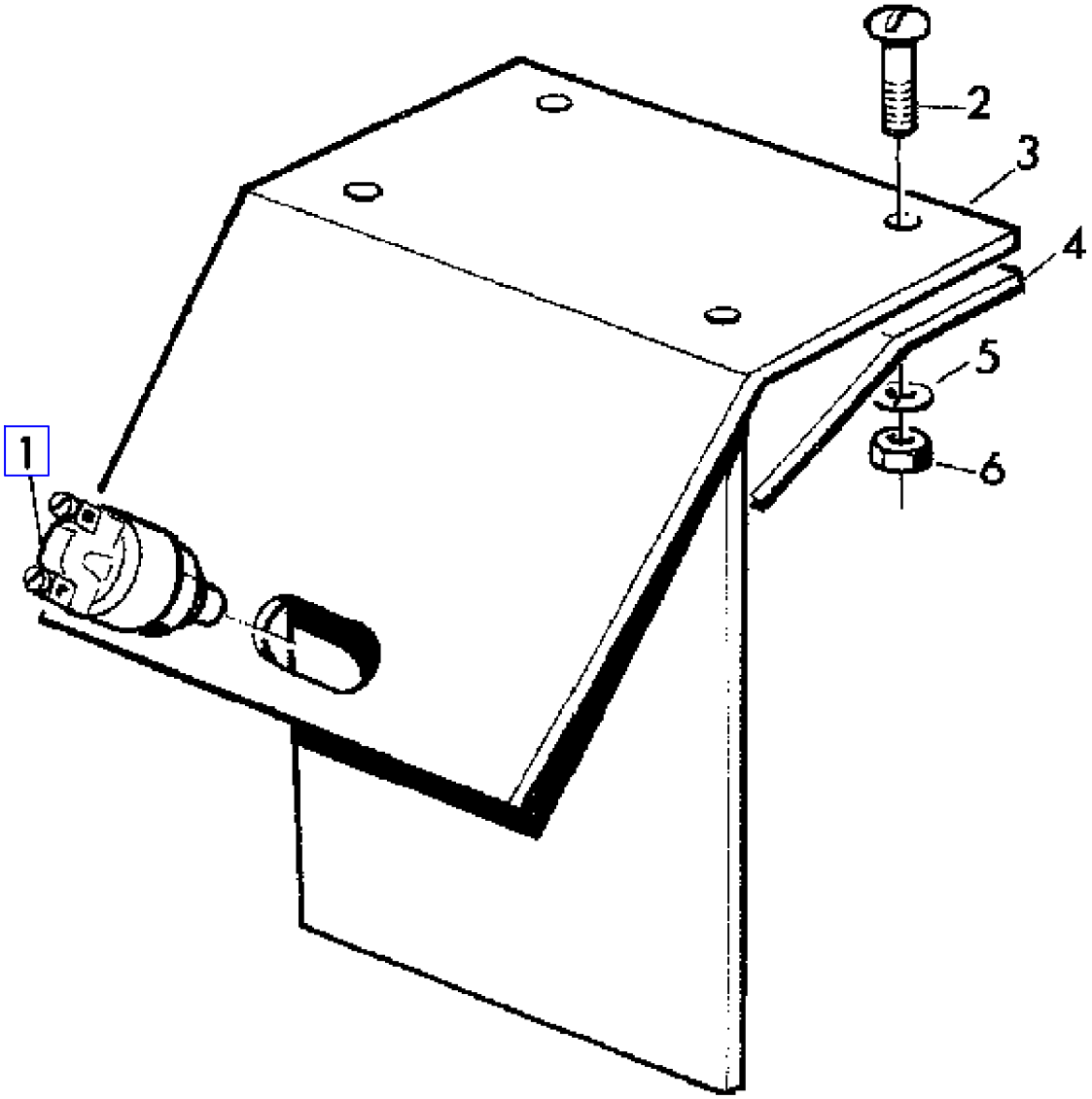

Z 63527

COPYRIGHT©1994 - 2008 DEERE & COMPANY Moline, Illinois All rights reserved

(1F15) STRAW WALKER WARNING DEVICE FOR CROSS SHAKER
AVERTISSEUR DE BOURRAGE DU SECOUEUR ROTATIF
STROHWARNANLAGE FUER QUERSCHUETTLER
AVVISATORE INGOLFAMENTO DEL SCUOTITORE TRASVERSALE
ALARMA PARA ATASCOS DE PAJA EN EL SACUDIDOR TRANSVERSAL
VARNINGSANORDNING FOR STOPP I TVARSKAKAREN

KEY	PART NO.	PART NAME	QTY	SERIAL NO.	955	REMARKS
1	AZ19518	SWITCH	1		X	
2	21M7031	SCREW	AR		X	M6X15
3	AZ19516	FLAP	1		X	
4	Z31553	HOLDER	1		X	
5	12M7012	LOCK WASHER	AR		X	6MM
6	14M7027	NUT	AR		X	M6

COPYRIGHT©1994 - 2008 DEERE & COMPANY Moline, Illinois All rights reserved

(1C11) SUCTION NOZZLE
BUSE D'ASPIRATION
ABSAUGDUESE
BOCCA D'ASPIRAZIONE
BOQUILLA DE ASPIRACION
UTSYGNINGSDYSA

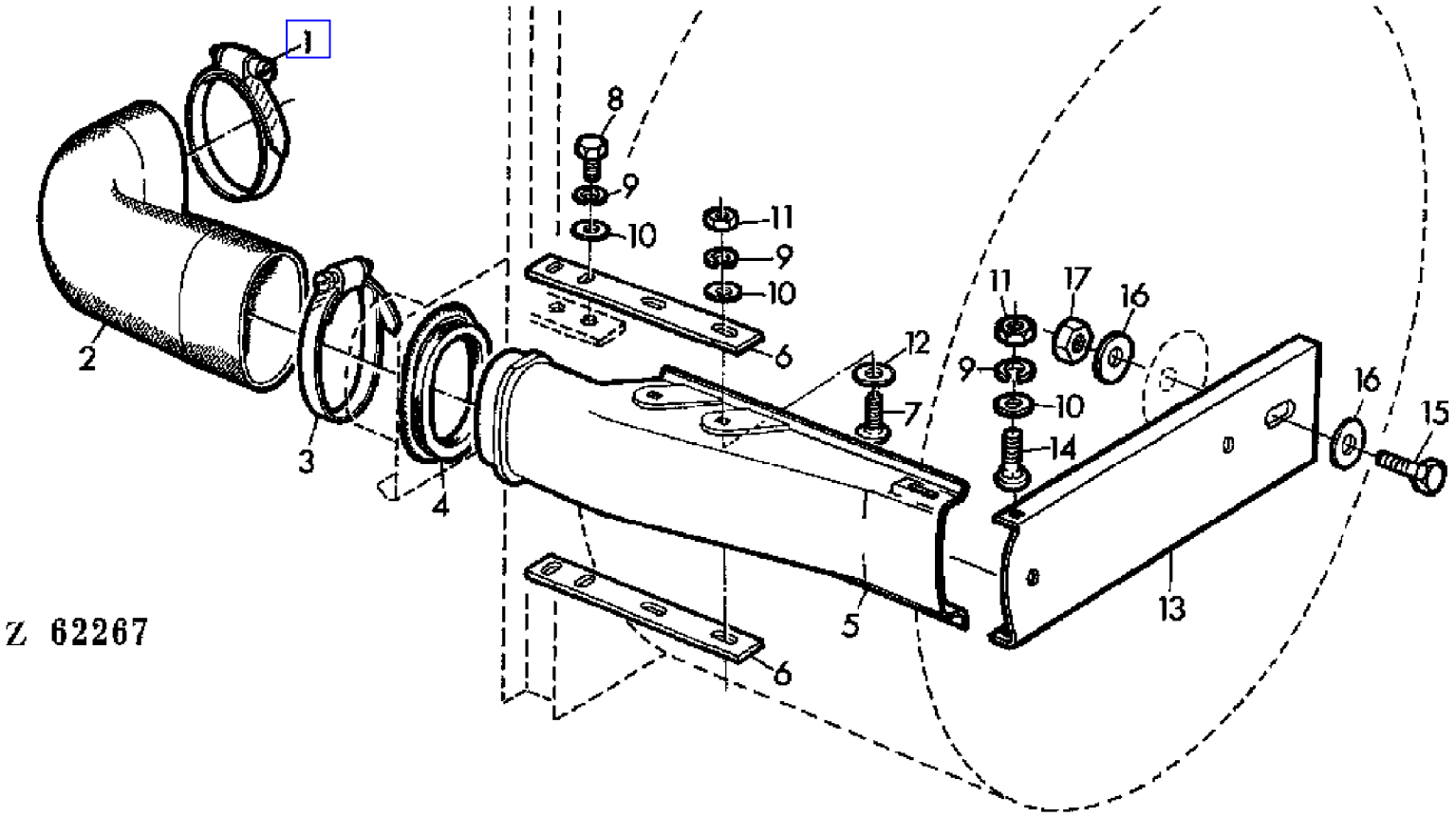

COPYRIGHT©1994 - 2008 DEERE & COMPANY Moline, Illinois All rights reserved

(1C11) SUCTION NOZZLE
BUSE D'ASPIRATION
ABSAUGDUESE
BOCCA D'ASPIRAZIONE
BOQUILLA DE ASPIRACION
UTSYGNINGSDYSA

KEY	PART NO.	PART NAME	QTY	SERIAL NO.	955	REMARKS
1	Z30340	CLAMP	1		X	
2	Z33077	HOSE	1		X	
3	Z33087	CLAMP	1		X	
4	Z33071	GASKET	1		X	
5	Z32924	NOZZLE	1		X	
6	Z33070	RETAINER	2		X	
7	03M7068	BOLT	4		X	M6X20
8	19M7159	CAP SCREW	4		X	M6X15
9	12M7012	LOCK WASHER	6		X	6MM
10	24M7054	WASHER	10		X	6MM
11	14M7027	NUT	6		X	M6
12	24M7025	WASHER	4		X	7MM
13	Z33076	SHEET	1		X	
14	03M7092	BOLT	2		X	M6X16
15	19M7301	CAP SCREW	1		X	M8X40
16	24M7036	WASHER	2		X	9MM
17	14M7029	NUT	1		X	M8

COPYRIGHT©1994 - 2008 DEERE & COMPANY Moline, Illinois All rights reserved

(3B02) SUN ROOF
PARE-SOLEIL
SONNENDACH
PARASOLE
PARASOL
SOLSKYDD

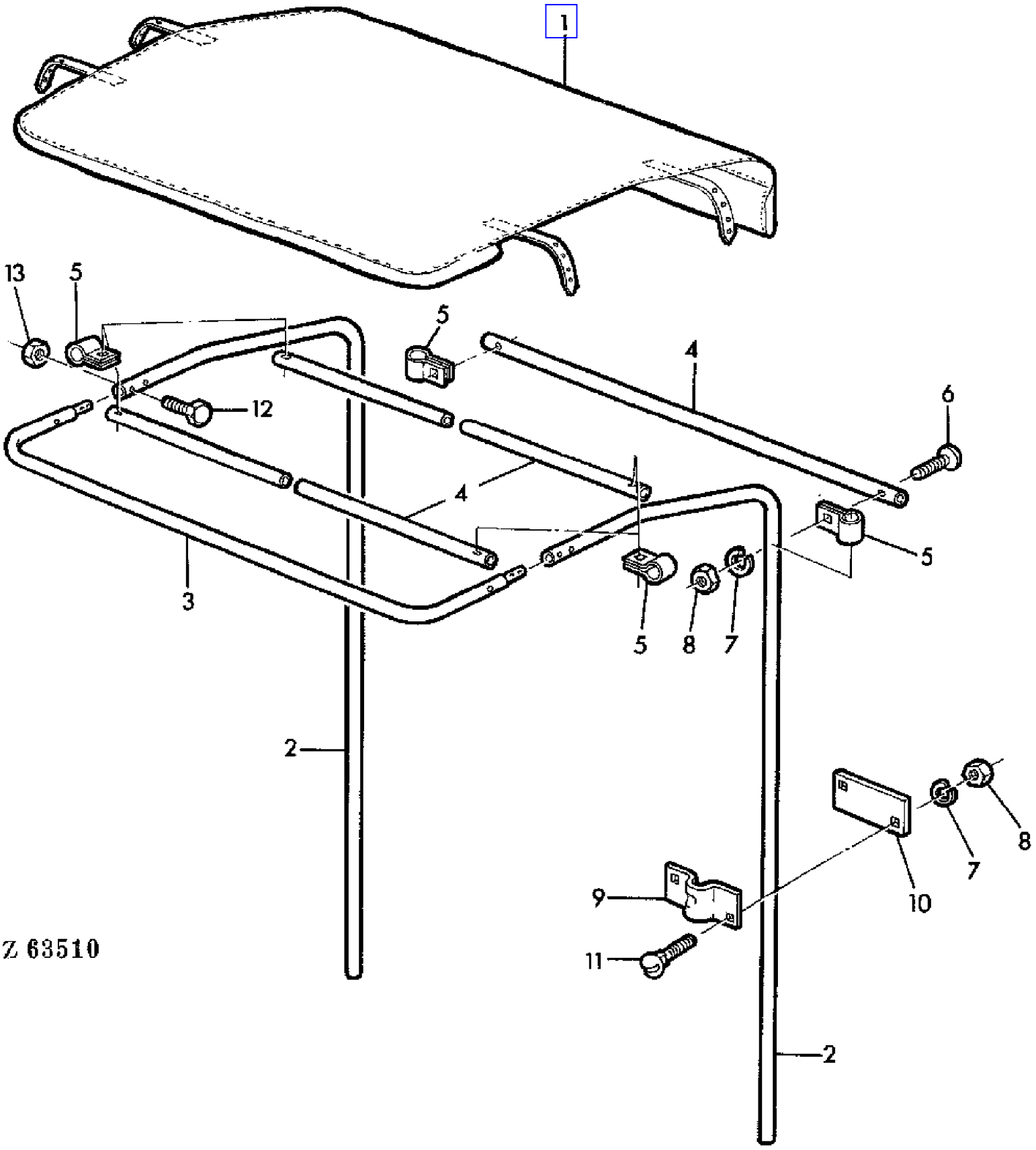

COPYRIGHT©1994 - 2008 DEERE & COMPANY Moline, Illinois All rights reserved

(PC4146) 955 Combine

(3B02) SUN ROOF
PARE-SOLEIL
SONNENDACH
PARASOLE
PARASOL
SOLSKYDD

KEY	PART NO.	PART NAME	QTY	SERIAL NO.	955	REMARKS
1	AZ31449	CANVAS	1		X	(SUB FOR AZ16339)
2	Z27569	PIPE	2		X	
3	AZ16340	PIPE	1		X	
4	Z27565	PIPE	3		X	
5	Z27564	CLAMP	6		X	
6	21M7166	SCREW	6		X	M8X40
7	12M7008	LOCK WASHER	14		X	8MM
8	14M7029	NUT	14		X	M8
9	Z27563	CLAMP	4		X	
10	Z27568	PLATE	4		X	
11	03M7054	BOLT	8		X	M8X20 |
12	19M7318	SCREW	4		X	M6X30
13	14M7027	NUT	4		X	M6

COPYRIGHT©1994 - 2008 DEERE & COMPANY Moline, Illinois All rights reserved

(1D12) SUPPORT-PRECLEANER(SPECIAL EQUIPMENT)
SUPPORT DE PREFILTRE (EQUIPEMENT SPECIAL)
ABSTUETZUNG-VORFILTER SONDERAUSRUESTUNG
SUPPORTO PREFILTRO(EQUIP. SPECIALE)
SOPORTES DEL PREPURIFICADOR-EQUIPO ESPECIAL
HALLARE AV FOERRENARE(EXTRA UTRUSTNING)

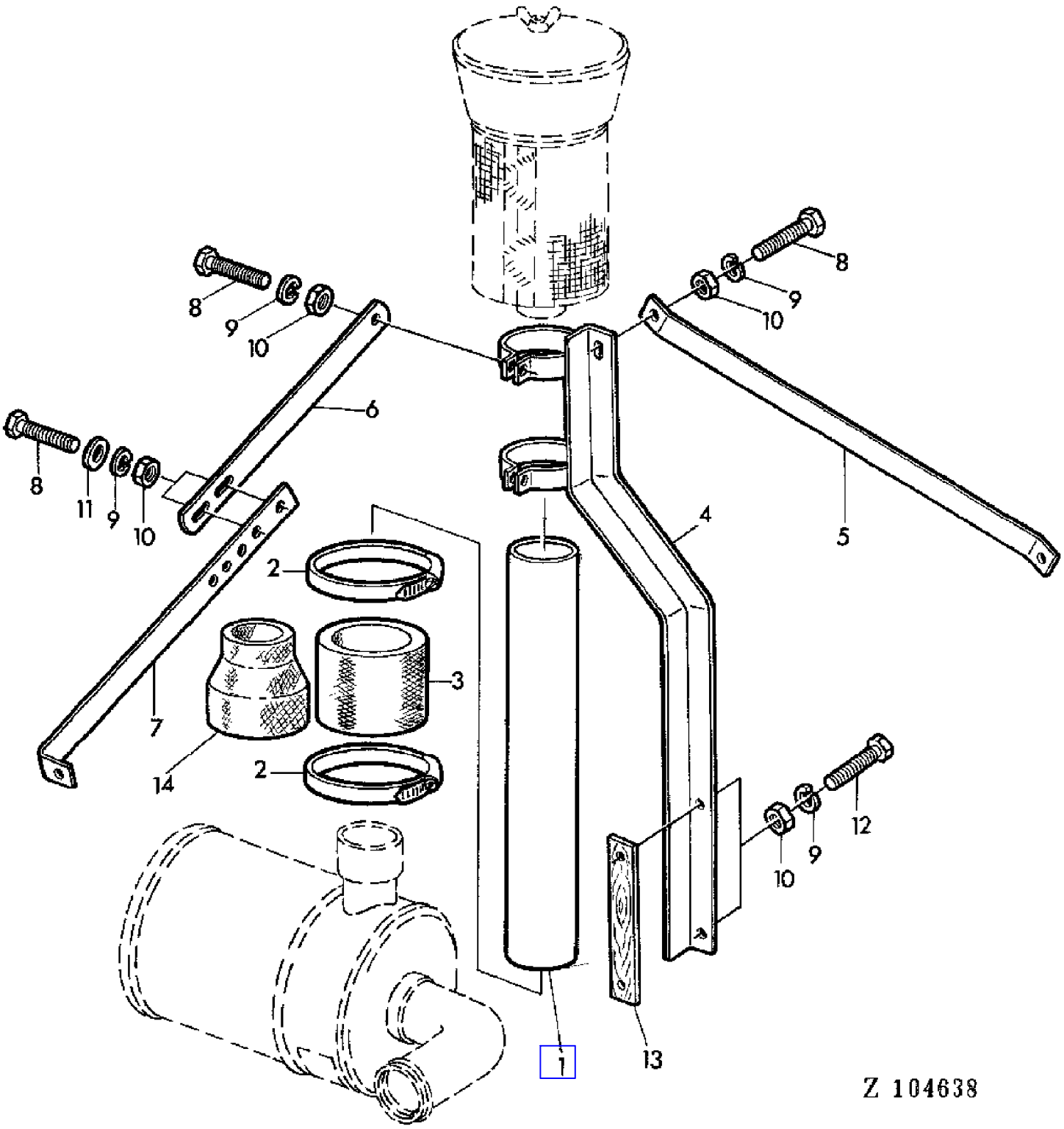

COPYRIGHT©1994 - 2008 DEERE & COMPANY Moline, Illinois All rights reserved

(1D12) SUPPORT-PRECLEANER(SPECIAL EQUIPMENT)
SUPPORT DE PREFILTRE (EQUIPEMENT SPECIAL)
ABSTUETZUNG-VORFILTER SONDERAUSRUESTUNG
SUPPORTO PREFILTRO(EQUIP. SPECIALE)
SOPORTES DEL PREPURIFICADOR-EQUIPO ESPECIAL
HALLARE AV FOERRENARE(EXTRA UTRUSTNING)

KEY	PART NO.	PART NAME	QTY	SERIAL NO.	955	REMARKS
1	Z31957	PIPE	1		X	
2	Z29925	CLAMP	2		X	
3	Z32506	HOSE	1	- 014053	X	
4	AZ33263	CRADLE	1		X	(SUB FOR AZ21513)
5	Z32637	SUPPORT	1		X	
6	Z32638	SUPPORT	1		X	
7	Z32640	SUPPORT	1		X	
8	19M7288	CAP SCREW	6		X	M8X30
9	12M7008	LOCK WASHER	8		X	8MM
10	14M7029	NUT	8		X	M8
11	24M7024	WASHER	8		X	9,5MM
12	19M7164	CAP SCREW	2		X	M8X50
13	Z32852	STRAP	1		X	
14	Z36936	HOSE	1	014054 -	X	

COPYRIGHT©1994 - 2008 DEERE & COMPANY Moline, Illinois All rights reserved

(1F17) SWITCH FOR HANDBRAKE
CONTACTEURS POUR FREINS A MAIN
SCHALTER FUER HANDBREMSE
INTERRUTTORI PER FRENI A MANO
CONTACTOS PARA FRENOS DE MANO
BROMSLJUSKONTAKTER FOR HANDBROMS

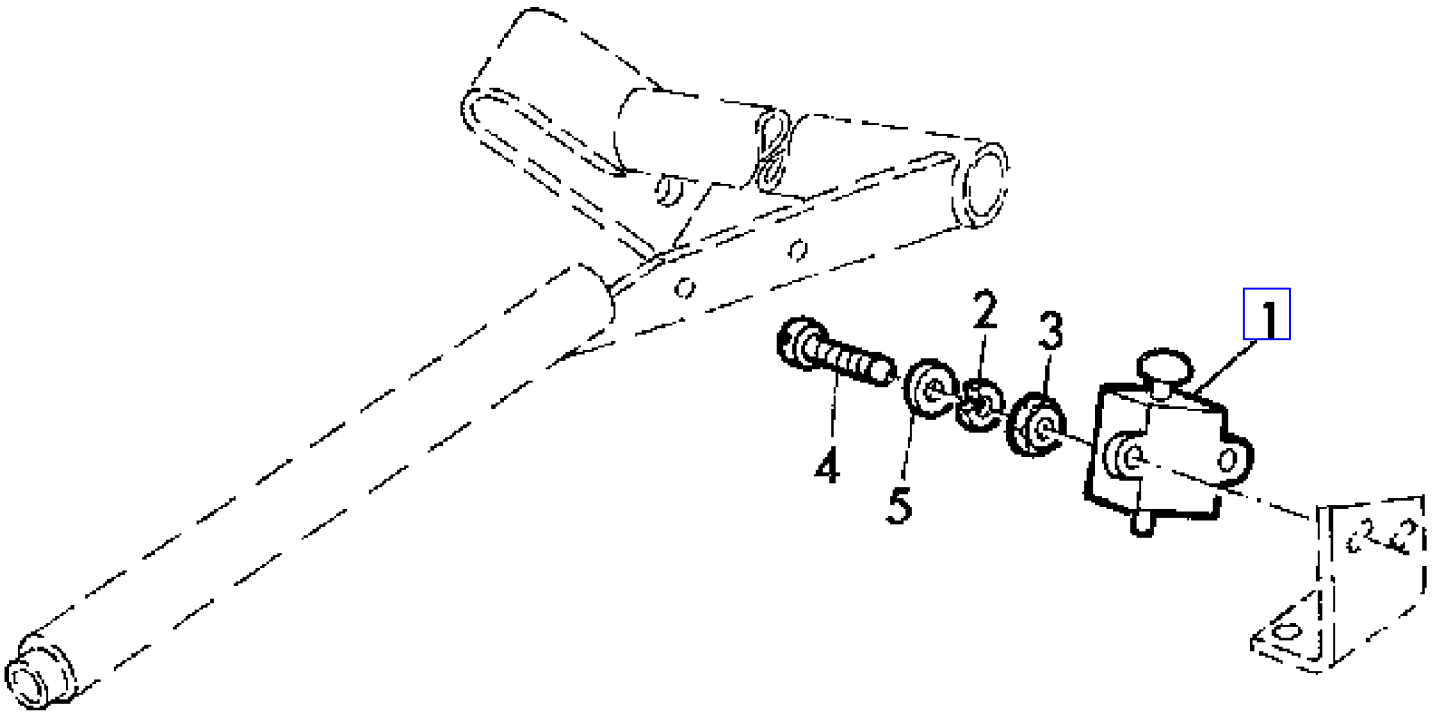

Z 27742

COPYRIGHT©1994 - 2008 DEERE & COMPANY Moline, Illinois All rights reserved

(1F17) SWITCH FOR HANDBRAKE
CONTACTEURS POUR FREINS A MAIN
SCHALTER FUER HANDBREMSE
INTERRUTTORI PER FRENI A MANO
CONTACTOS PARA FRENOS DE MANO
BROMSLJUSKONTAKTER FOR HANDBROMS

KEY	PART NO.	PART NAME	QTY	SERIAL NO.	955	REMARKS
1	AL11174	SWITCH	2		X	
2	12M7031	LOCK WASHER	4		X	4MM
3	14M7139	NUT	4		X	M4
4	21M7135	SCREW	4		X	M4X25
5	24M7117	WASHER	4		X	4MM

COPYRIGHT©1994 - 2008 DEERE & COMPANY Moline, Illinois All rights reserved

(4B10) TACHOMETER
COMPTE-TOURS
DREHZAHLMESSER
CONTAGIRI
CUENTARREVOLUCIONES
VARVTALSMATARE

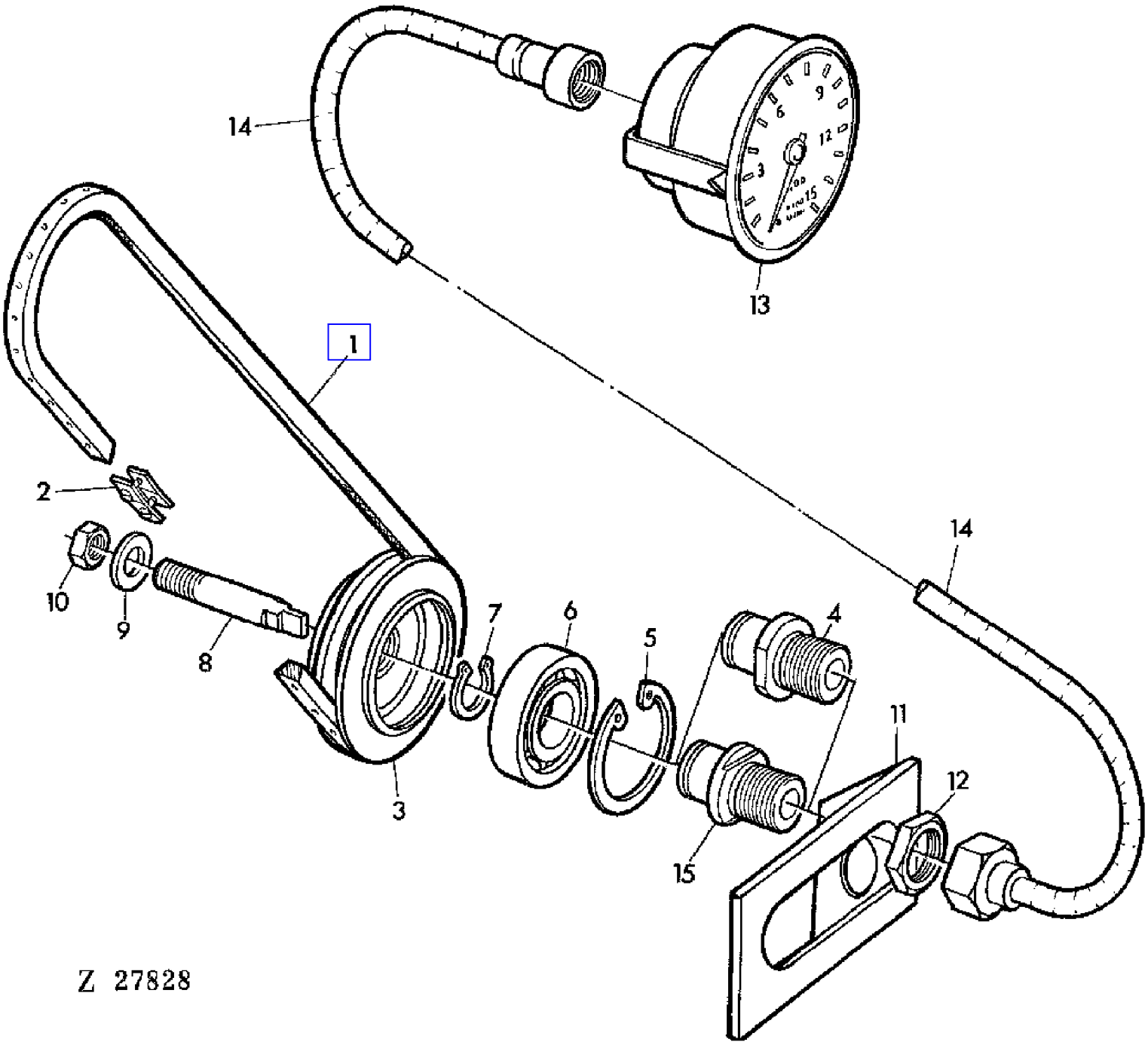

COPYRIGHT©1994 - 2008 DEERE & COMPANY Moline, Illinois All rights reserved

(PC4146) 955 Combine

(4B10) TACHOMETER
COMPTE-TOURS
DREHZAHLMESSER
CONTAGIRI
CUENTARREVOLUCIONES
VARVTALSMATARE

KEY	PART NO.	PART NAME	QTY	SERIAL NO.	955	REMARKS
1	Z31867	BELT	1		X	
2	AZ20532	LINK	1		X	
3	AZ18152	PULLEY	1		X	
4	Z22793	BUSHING	1	- 025147	X	
5	40M1863	SNAP RING	1		X	47X1,75MM
6	JD30071	BALL BEARING	1		X	
7	40M1825	SNAP RING	1		X	20X1,2MM
8	Z22794	SHAFT	1		X	
9	24M7028	WASHER	1		X	10,5MM
10	14M7148	NUT	1		X	M10X1
11	Z39819	HOLDER	1		X	(SUB FOR AZ18153)
12	14M7161	NUT	1		X	M22X1,5
13	AZ23047	TACHOMETER	1		X	
14	AZ19599	CABLE	1		X	
15	Z39818	UNION FITTING	1	025148 -	X	

COPYRIGHT©1994 - 2008 DEERE & COMPANY Moline, Illinois All rights reserved

(4D22) TAILINGS AND CLEAN GRAIN AUGER HOUSING
VIS A GRAIN ET A OTONS ET CARTER
GEHAEUSE MIT KOERNER-UND UEBERKEHRSCHNECKE
SCATOLA DELLE COCLEE GRANO E RICUPERO
CARCASA CON SINFINES DE GRANO LIMPIO Y DE RETRILLA
HUS FOER RETUR- OCH SAEDESLEVATORN

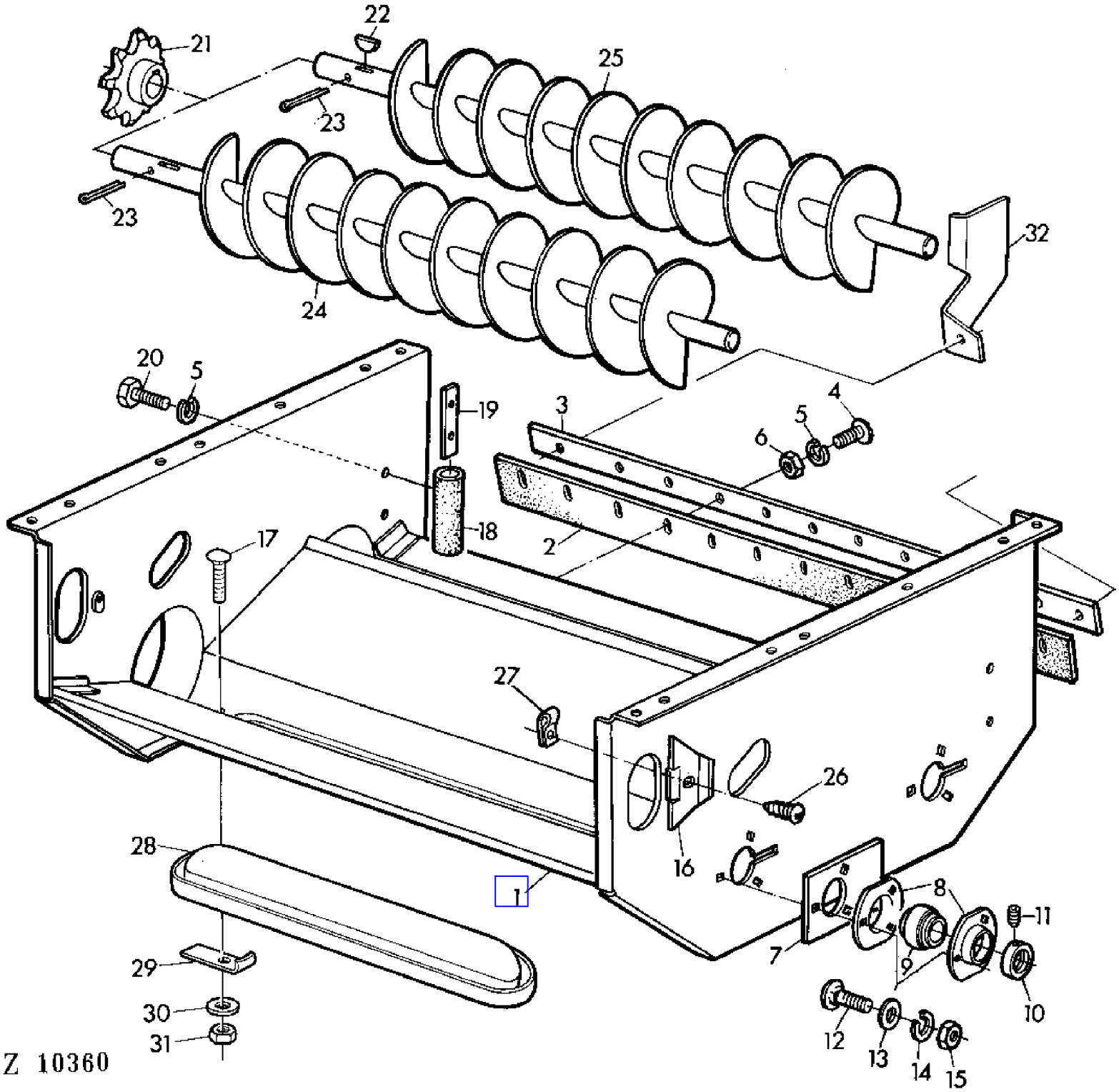

COPYRIGHT©1994 - 2008 DEERE & COMPANY Moline, Illinois All rights reserved

(4D22) TAILINGS AND CLEAN GRAIN AUGER HOUSING
VIS A GRAIN ET A OTONS ET CARTER
GEHAEUSE MIT KOERNER-UND UEBERKEHRSCHNECKE
SCATOLA DELLE COCLEE GRANO E RICUPERO
CARCASA CON SINFINES DE GRANO LIMPIO Y DE RETRILLA
HUS FOER RETUR- OCH SAEDESLEVATORN

KEY	PART NO.	PART NAME	QTY	SERIAL NO.	955	REMARKS
1	AZ23181	CASE	1		X	
2	Z20157	GASKET	1		X	
3	Z35556	REINFORCEMENT	1		X	(SUB FOR Z20158)
4	21M7031	SCREW	10		X	M6X15
5	12M7012	LOCK WASHER	16		X	6MM
6	14M7027	NUT	10		X	M6
7	Z20198	HOLDER	2		X	
8	P47232	PRESSED FLANGED HOUSING	4		X	
9	JD39105	BALL BEARING	2		X	
10	AZ10044	ECCENTRIC LOCKING COLLAR	2		X	ASSY, INCL KEY 11
11	AZ19843	SET SCREW	2		X	KIT
12	03M7054	BOLT	6		X	M8X20
13	24M7036	WASHER	6		X	9MM
14	12M7008	LOCK WASHER	6		X	8MM
15	14M7029	NUT	6		X	M8
16	Z22335	FLAP	2		X	
17	03M7160	BOLT	4		X	M8X35
18	Z25904	HOSE	2		X	
19	Z25903	STRAP	2		X	
20	19M7159	CAP SCREW	4		X	M6X15
21	Z10997	CHAIN SPROCKET	2		X	Z = 8
22	26M4228	SHAFT KEY	2		X	8X11MM
23	11M7034	COTTER PIN	2		X	5X65MM
24	AZ10104	AUGER	1		X	(A)
	AZ33385	AUGER	1		X	(A) (C)
25	AZ10106	AUGER	1		X	(B)
	AZ33386	AUGER	1		X	(B) (C)
26	37M7009	SCREW	2		X	5,5X10MM
27	Z20443	NUT	2		X	
28	Z34303	COVER	2		X	
29	Z34294	HOLDER	4		X	
30	24M7040	WASHER	4		X	11MM
31	14M7151	NUT	4		X	M8
32	Z35908	GUARD	1	006196 -	X	RH
33	Z35907	GUARD	1	006196 -	X	LH

(A) LOWER GRAIN AUGER
VIS A GRAIN INFERIEURE
UNTERE KOERNERSCHNECKE
COCLEA INFERIORE PER IL GRAN
SINFIN DE GRANO LIMIPIO INFE
NEDRE SAEDESELEVATOR

(B) LOWER TAILINGS AUGER
VIS A OTONS INFERIEURE
UNTERE UEBERKEHRSCHNECKE
COCLEA INFERIORE PER IL RICU
SINFIN DE RETRILLA INFERIOR
NEDRE RETURELEVATOR

(C) FOR RICE ATTACHMENT
POUR EQUIPEMENT RIZ
FUER REISAUSRUESTUNG
PER ATTREZZATURA DA RISO
PARA EQUIPO DE ARROZ
FOR RISTILLBEHOR

COPYRIGHT©1994 - 2008 DEERE & COMPANY Moline, Illinois All rights reserved

(4E06) TAILINGS ELEVATOR
ELEVATEUR D'OTONS
UEBERKEHRELEVATOR
ELEVATORE RICUPERO
ELEVADOR DE RETRILLA
RETURELEVATOR

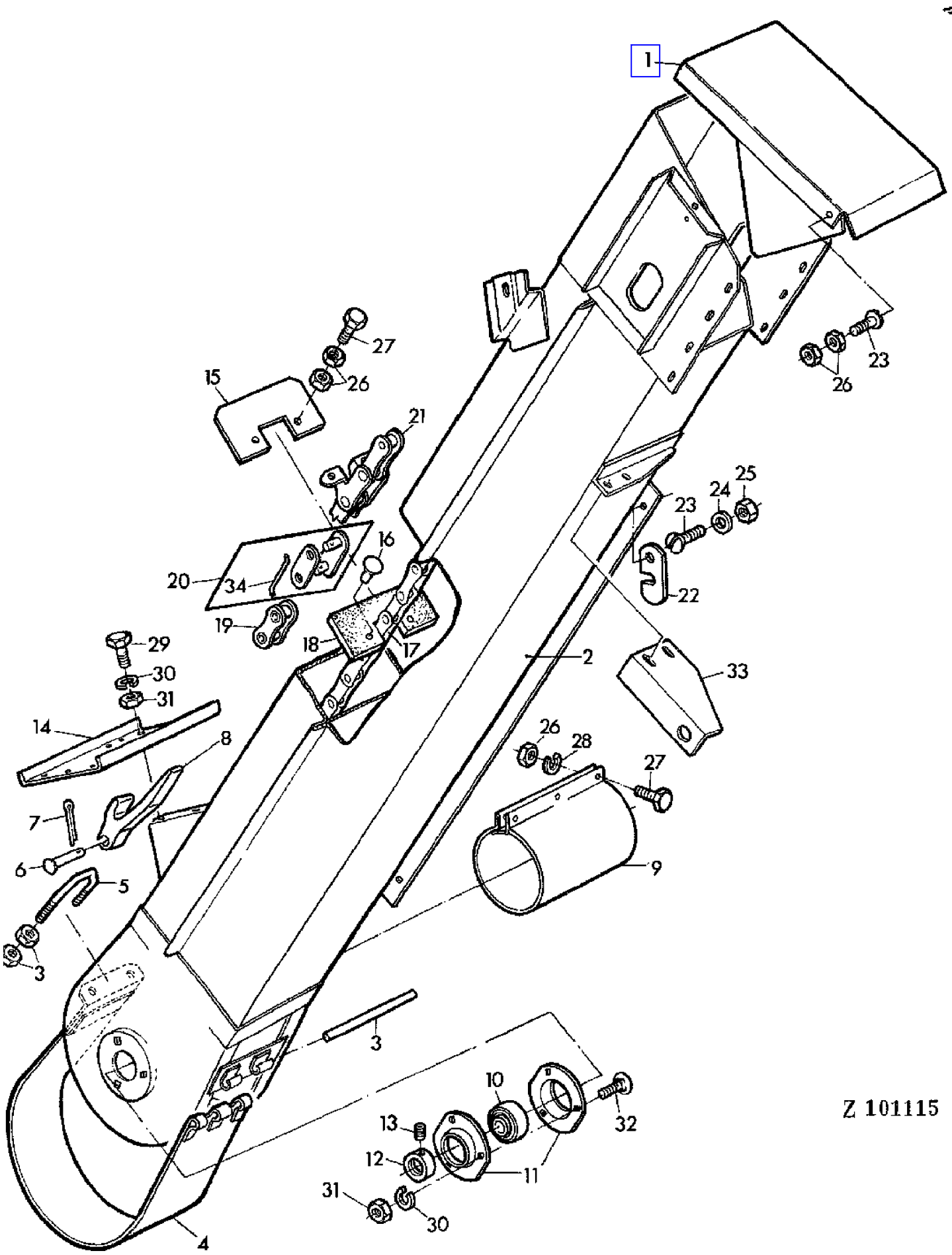

COPYRIGHT©1994 - 2008 DEERE & COMPANY Moline, Illinois All rights reserved

(4E06) TAILINGS ELEVATOR
ELEVATEUR D'OTONS
UEBERKEHRELEVATOR
ELEVATORE RICUPERO
ELEVADOR DE RETRILLA
RETURELEVATOR

KEY	PART NO.	PART NAME	QTY	SERIAL NO.			955	REMARKS
1	AZ10313	COVER	1				X	
2	AZ15283	HOUSING	1		-	008651	X	
	AZ24922	HOUSING	1	008652	-	010731	X	(ORD AZ25781 W/ AZ25442, AZ25749)
	AZ25781	HOUSING	1	010732	-		X	
3	Z20627	PIN	1				X	
4	AZ10315	COVER	1		-	010731	X	
	AZ25442	COVER	1	010732	-		X	
5	Z20619	U-BOLT	1				X	
6	Z21059	PIN	1				X	
7	11M7009	COTTER PIN	1				X	2X18MM
8	Z11406	LEVER	1				X	(SUB FOR H11360)
9	Z20742	PIPE	1				X	(ORD AZ35685)
10	JD39102	BALL BEARING	1				X	
11	P47232	PRESSED FLANGED HOUSING	2				X	
12	AZ10044	ECCENTRIC LOCKING COLLAR	1				X	ASSY, INCL KEY 13
13	AZ19843	SET SCREW	1				X	KIT
14	Z31735	SHEET	1				X	(ORD Z33412)
15	Z20728	PADDLE	AR				X	
16	Z20779	RIVET	AR				X	
17	AZ24219	LINK CHAIN	1				X	L = 156, INCL KEYS 16,18-21
18	Z20781	PADDLE	18				X	
19	AL15479	LINK	1		-	XXXX	X	
	AZ24533	LINK	1	XXXX	-		X	
20	AL15481	CHAIN LINK	1		-	XXXX	X	INCL KEY 34
	AZ24534	LINK	1	XXXX	-		X	INCL KEY 34
21	AL15480	LINK CHAIN	1		-	XXXX	X	
	AZ24535	LINK CHAIN	1	XXXX	-		X	
22	Z26179	BRACKET	1				X	
23	21M7031	SCREW	3				X	M6X15
24	24M7088	WASHER	2				X	6,6MM
25	14M7165	LOCK NUT	2				X	M6
26	14M7027	NUT	19				X	M6
27	19M7286	CAP SCREW	9				X	M6X25
28	12M7012	LOCK WASHER	3				X	6MM
29	19M7139	CAP SCREW	8				X	M8X20
30	12M7008	LOCK WASHER	11				X	8MM
31	14M7029	NUT	15				X	M8
32	03M7090	BOLT	3				X	M8X15
33	AZ25749	RETAINER	1				X	
34	Z41567	WIRE	AR				X	

COPYRIGHT©1994 - 2008 DEERE & COMPANY Moline, Illinois All rights reserved

(4E10) TAILINGS ELEVATOR DRIVE
ENTRAINEMENT ELEVATEUR D'OTONS
UEBERKEHRELEVATOR-ANTRIEB
COMANDO DEL ELEVATORE RICUPERO
TRANSMISION DEL ELEVADOR DE RETRILLA
RETURELEVATORNS DRIVNING

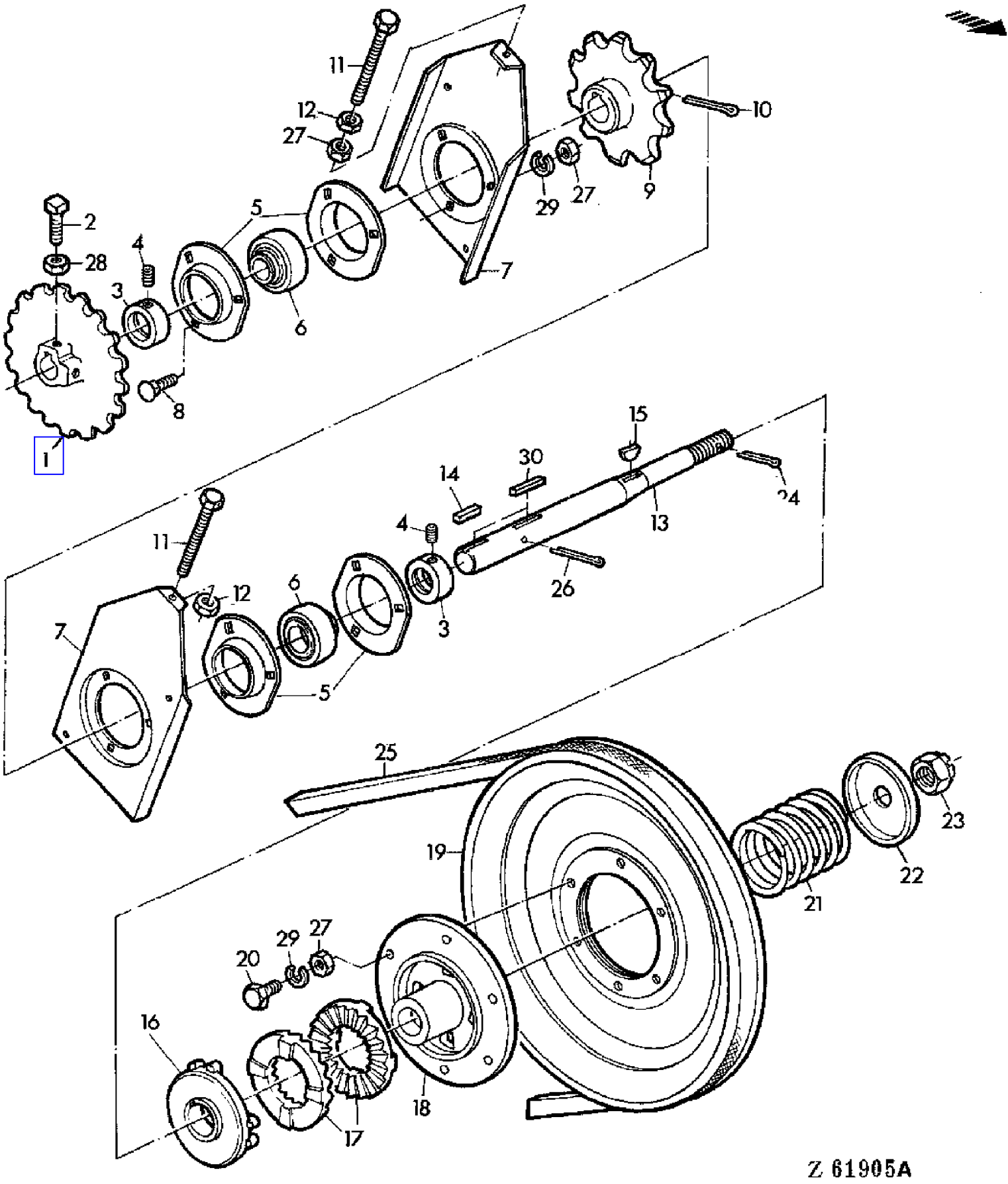

COPYRIGHT©1994 - 2008 DEERE & COMPANY Moline, Illinois All rights reserved

(4E10) TAILINGS ELEVATOR DRIVE
ENTRAINEMENT ELEVATEUR D'OTONS
UEBERKEHRELEVATOR-ANTRIEB
COMANDO DEL ELEVATORE RICUPERO
TRANSMISION DEL ELEVADOR DE RETRILLA
RETURELEVATORNS DRIVNING

KEY	PART NO.	PART NAME	QTY	SERIAL NO.	955	REMARKS
1	Z10117	CHAIN SPROCKET	1		X	Z = 16
2	Z26249	SET SCREW	2		X	10X22MM
3	AZ10044	ECCENTRIC LOCKING COLLAR	2		X	ASSY, INCL KEY 4
4	AZ19843	SET SCREW	2		X	KIT
5	P47232	PRESSED FLANGED HOUSING	4		X	
6	JD39102	BALL BEARING	2		X	
7	Z51316	SUPPORT	2		X	(SUB FOR Z20601)
8	03M7054	BOLT	6		X	M8X20
9	Z10997	CHAIN SPROCKET	1		X	Z = 8
10	11M7033	COTTER PIN	1		X	5X60MM
11	19M7643	CAP SCREW	2		X	M8X75 (SUB FOR Z20620)
12	14M7166	LOCK NUT	2		X	M8
13	Z36457	SHAFT	1		X	(SUB FOR Z20734)
14	49M4108	SHAFT KEY	2		X	8X7X32MM
15	26M4227	SHAFT KEY	1		X	6X9MM
16	Z10033	DRIVER	1		X	
17	Z699H	SLIP CLUTCH	2		X	
18	Z10030	HUB	1		X	
19	AZ10389	PULLEY	1		X	
20	19M7163	CAP SCREW	6		X	M8X25
21	Z20555	COMPRESSION SPRING	1		X	
22	Z20556	CAP	1		X	
23	14M7186	NUT	1		X	M18
24	11M7024	COTTER PIN	1		X	4X40MM
25	Z20743	BELT	1		X	LGTH 2210MM
26	11M7017	COTTER PIN	1		X	3X15MM
27	14M7029	NUT	2		X	M8
28	14M7152	NUT	2		X	M10
29	12M7008	LOCK WASHER	12		X	8MM
30	49M4836	SHAFT KEY	1		X	8X7X45MM

COPYRIGHT©1994 - 2008 DEERE & COMPANY Moline, Illinois All rights reserved

(4B06) TENSION PULLEY(SEPARATOR)
GALET TENDEUR (BATTAGE)
SPANNROLLE (DRESCHWERK)
PULEGGIA TENDITRICE(GRUPPO TREBBIANTE)
POLEA TENSORA (TRILLA)
SPAENNREMSKIVA(TROESKVERK)

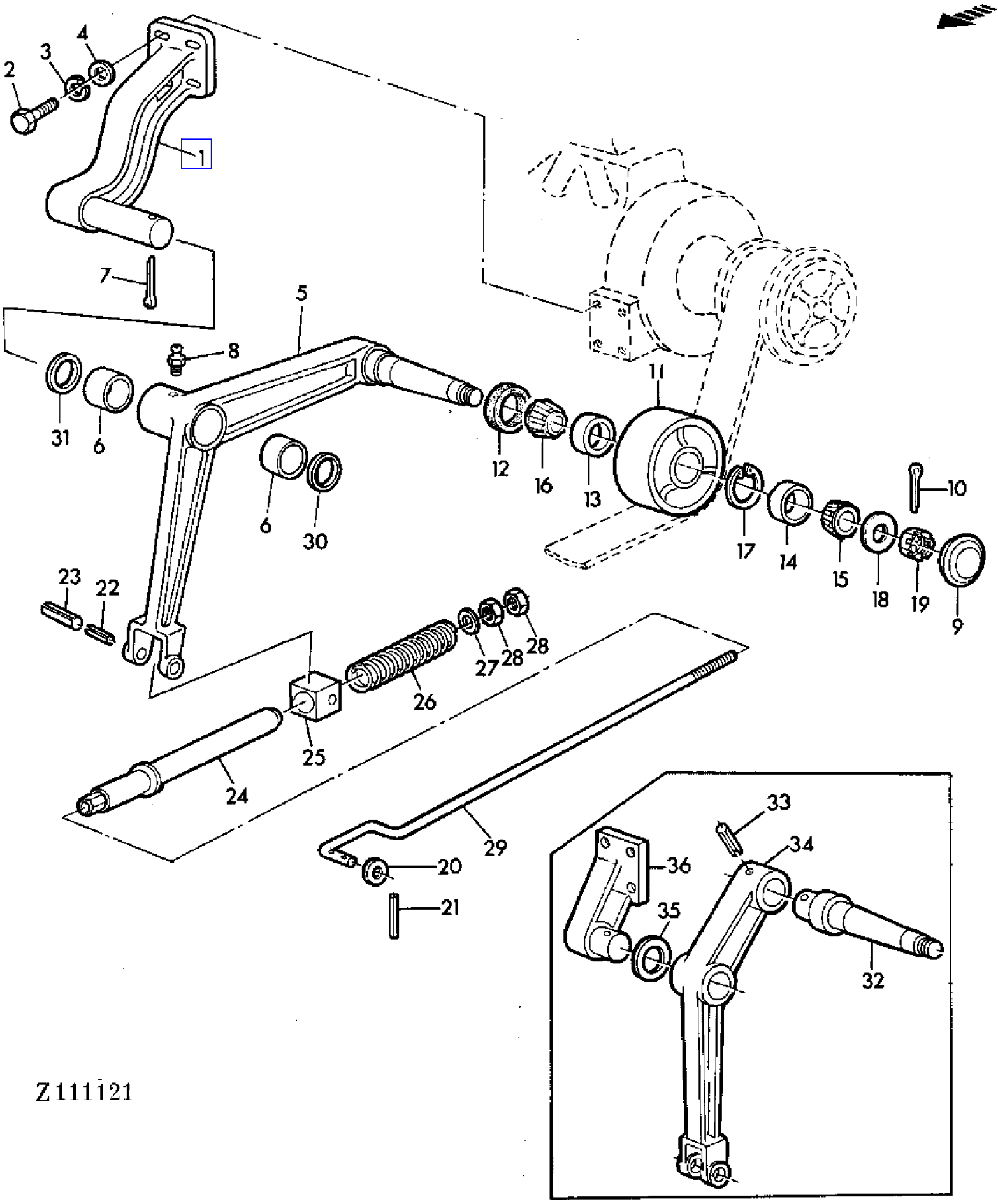

COPYRIGHT©1994 - 2008 DEERE & COMPANY Moline, Illinois All rights reserved

(PC4146) 955 Combine

(4B06) TENSION PULLEY(SEPARATOR)
GALET TENDEUR (BATTAGE)
SPANNROLLE (DRESCHWERK)
PULEGGIA TENDITRICE(GRUPPO TREBBIANTE)
POLEA TENSORA (TRILLA)
SPAENNREMSKIVA(TROESKVERK)

KEY	PART NO.	PART NAME	QTY	SERIAL NO.		955	REMARKS
1	AZ31862	ARM	1	034233	-	X	
2	19H1815	CAP SCREW	4			X	1/2"X1-1/2"
3	12H301	LOCK WASHER	4			X	1/2"
4	24M7038	WASHER	4			X	14MM
5	AZ31861	ARM	1	034233	-	X	INCL KEY 6
6	Z21597	BUSHING	2	034233	-	X	
7	11M7022	COTTER PIN	1			X	4X30MM
8	58M5573	LUBRICATION FITTING	1			X	M6
9	Z9769H	CAP	1			X	
10	11M7012	COTTER PIN	1			X	3X18MM
11	Z10415	IDLER	1			X	
12	AZ12215	SEAL	1			X	
13	JD8225	BEARING CUP	1			X	
14	JD8226	BEARING CUP	1			X	
15	JD8188	BEARING CONE	1			X	
16	JD8187	BEARING CONE	1			X	
17	40M1862	SNAP RING	1			X	45X1,75MM
18	24M7053	WASHER	1			X	17MM
19	14M7179	NUT	1			X	M16X1,5
20	24M7038	WASHER	1			X	14MM
21	34M7098	SPRING PIN	1			X	4X26MM
22	34M7030	SPRING PIN	2			X	5X20MM
23	34M7061	SPRING PIN	2			X	8X20MM
24	AZ12216	SLEEVE	1			X	
25	Z22110	GUIDE	1			X	
26	Z22116	SPRING	1			X	
27	24M7102	WASHER	1			X	14MM
28	14M7031	NUT	2			X	M12
29	Z22117	ROD	1			X	
30	L18453	WASHER	2	034233	-	X	50X35,5X2MM
31	Z21607	WASHER	1	034233	-	X	50X35,5X4MM
32	Z27512	SHAFT	1		- 034232	X	
33	34M7043	SPRING PIN	1		- 034232	X	6X45MM
34	AZ12213	LEVER	1		- 034232	X	ASSY, INCL KEYS 32,33
35	24M7092	WASHER	1		- 034232	X	26MM
36	AZ10722	BRACKET	1		- 034232	X	

COPYRIGHT©1994 - 2008 DEERE & COMPANY Moline, Illinois All rights reserved

(2A23) THREE SPOOL CONTROL VALVE
DISTRIBUTEUR TROIS VOIES
STEUERGERAET-DREIFACH
DISTRIBUTORE A 3 STELI
VALVULA DE MANDO CON TRES CIRCUITOS
MANOVERVENTIL-TREFALT

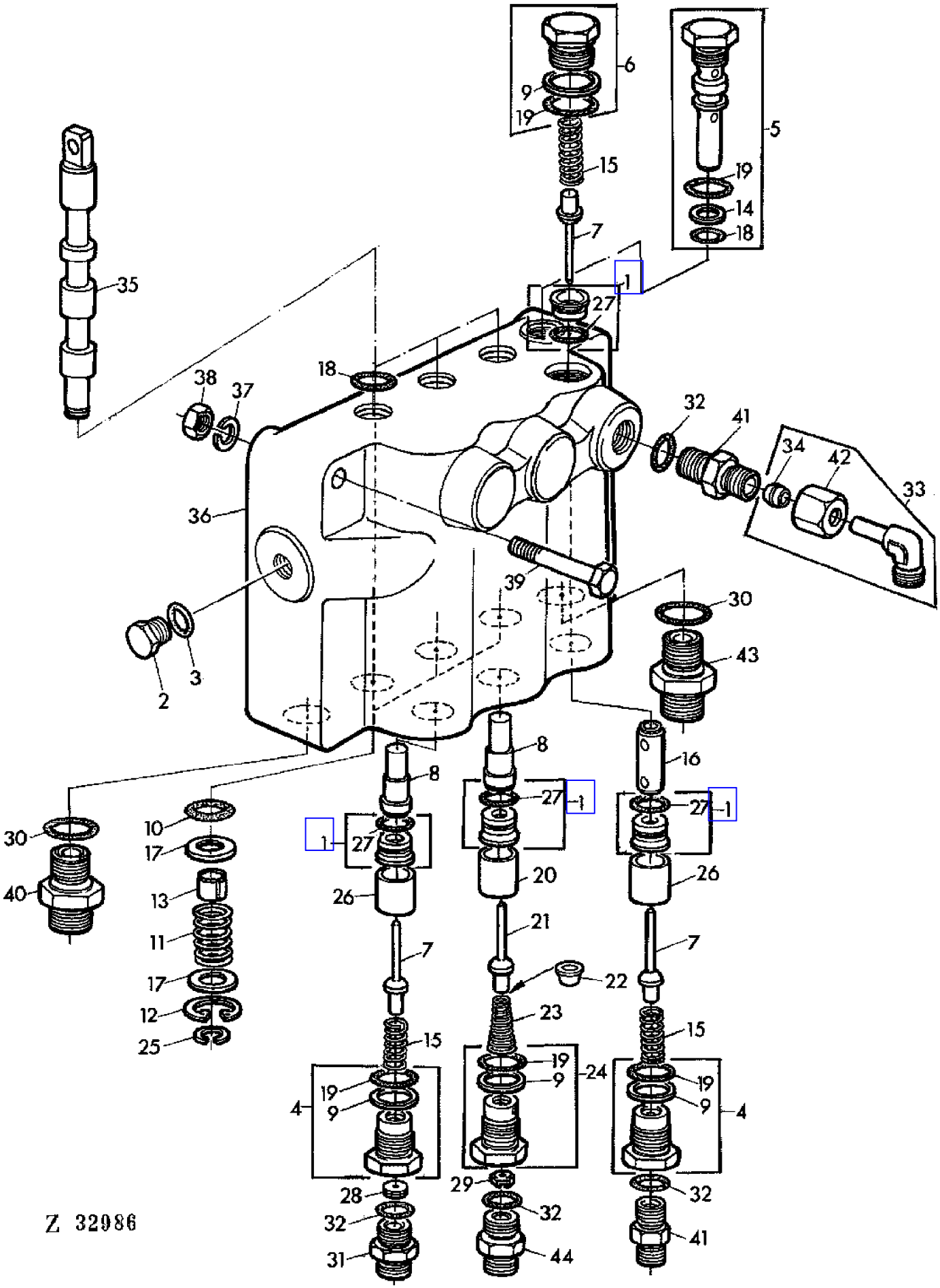

COPYRIGHT©1994 - 2008 DEERE & COMPANY Moline, Illinois All rights reserved

(2A23) THREE SPOOL CONTROL VALVE
DISTRIBUTEUR TROIS VOIES
STEUERGERAET-DREIFACH
DISTRIBUTORE A 3 STELI
VALVULA DE MANDO CON TRES CIRCUITOS
MANOVERVENTIL-TREFALT

KEY	PART NO.	PART NAME	QTY	SERIAL NO.	955	REMARKS
1	AZ17996	VALVE SEAT INSERT	4		X	INCL KEY 27
2	R31631	DRAIN PLUG	1		X	
3	R26287	O-RING	1		X	
4	AZ22925	FITTING	2		X	INCL KEYS 9,19
5	AH63330	RELIEF VALVE	1		X	INCL KEYS 14,18,19
6	AH64080	FITTING	1		X	INCL KEYS 9,19
7	AN30940	POPPET	3		X	
8	H35229	PLUNGER	2		X	
9	H35230	BACK-UP RING	4		X	
10	H36256	O-RING	3		X	
11	H60819	SPRING	3		X	
12	H60820	SNAP RING	3		X	
13	H62801	BUSHING	3		X	
14	H63357	BACK-UP RING	1		X	
15	N31765	SPRING	3		X	
16	N31766	PLUNGER	1		X	
17	N31767	WASHER	6		X	
18	R375R	O-RING	3		X	
19	T13119	O-RING	4		X	
20	Z33642	GUIDE	3		X	
21	AH80223	POPPET	1		X	
22	H84537	GUIDE	1		X	
23	H81705	SPRING	1		X	
24	AZ22653	FITTING	1		X	INCL KEYS 9,19
25	32244	SNAP RING	3		X	
26	Z30561	SPACER	2		X	
27	R27166	O-RING	4		X	(SUB FOR Z29304)
28	Z23364	ORIFICE	1		X	ID = 1,400 MM
29	Z44130	RESTRICTOR	1		X	AR, ID = 2,5 MM (SUB FOR Z23713)
	Z44135	RESTRICTOR	1		X	AR, ID = 3,0 MM (SUB FOR Z40697)
30	R26375	O-RING	2		X	
31	Z32963	FITTING	1		X	
32	R26448	O-RING	3		X	
33	AZ21972	ELBOW FITTING	1		X	INCL KEYS 34,42
34	Z32997	SLEEVE FITTING	1		X	
35	.....	SPOOL VALVE	1		X	NSEP (ORD AZ33489)
36	.....	HOUSING	1		X	NSEP (ORD AZ33489)
37	12M7008	LOCK WASHER	2		X	8MM
38	14M7029	NUT	2		X	M8
39	19M7185	CAP SCREW	2		X	M8X60
40	Z32967	FITTING	1		X	
41	Z32969	FITTING	2		X	
42	Z32975	TUBE NUT	1		X	
43	Z32966	FITTING	1		X	

COPYRIGHT©1994 - 2008 DEERE & COMPANY Moline, Illinois All rights reserved

(2A23) THREE SPOOL CONTROL VALVE
DISTRIBUTEUR TROIS VOIES
STEUERGERAET-DREIFACH
DISTRIBUTORE A 3 STELI
VALVULA DE MANDO CON TRES CIRCUITOS
MANOVERVENTIL-TREFALT

KEY	PART NO.	PART NAME	QTY	SERIAL NO.	955	REMARKS
44	Z32968	FITTING	1		X	
..	AZ33489	CONTROL VALVE	1		X	(SUB FOR AZ19372, AZ30316)
..	AZ22654	TUNE-UP KIT	1		X	KIT, INCL KEYS 7,9,10,14,18,19,27 (SUB FOR AZ19149)

COPYRIGHT©1994 - 2008 DEERE & COMPANY Moline, Illinois All rights reserved

(1E04) THROTTLE AND ENGINE SHUT-OFF LINKAGE
TRINGLERIE D'ACCELERATION ET D'ARRET
GAS-UND STOPPGESTAENGE
TIRANTERIA REGOIAZIONE VELOCITA
VARILLAJE DE PARADA Y ACELERACION
GAS-OCH STOPPREGLAGE

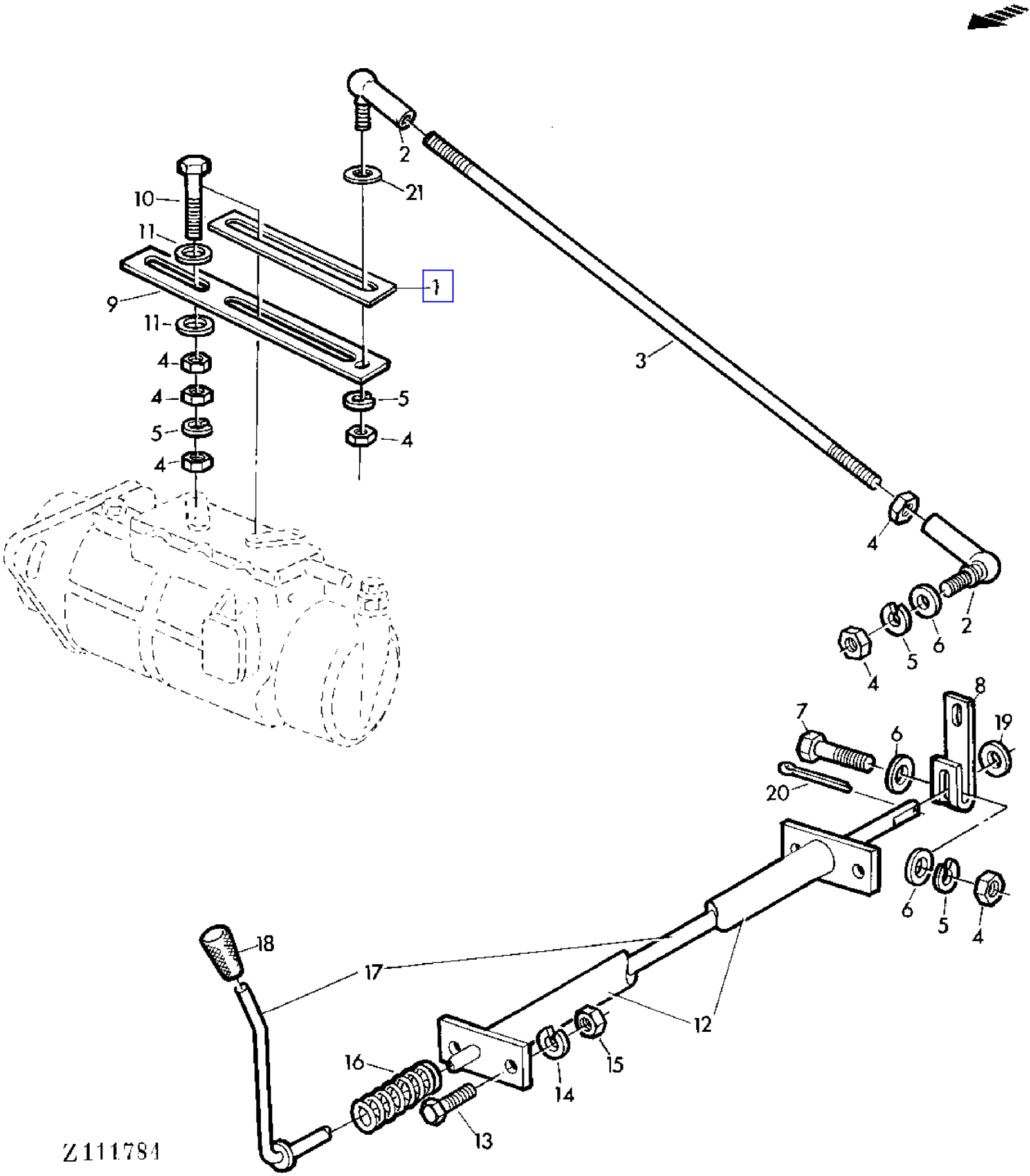

COPYRIGHT©1994 - 2008 DEERE & COMPANY Moline, Illinois All rights reserved

(1E04) THROTTLE AND ENGINE SHUT-OFF LINKAGE
TRINGLERIE D'ACCELERATION ET D'ARRET
GAS-UND STOPPGESTAENGE
TIRANTERIA REGOIAZIONE VELOCITA
VARILLAJE DE PARADA Y ACELERACION
GAS-OCH STOPPREGLAGE

KEY	PART NO.	PART NAME	QTY	SERIAL NO.	955	REMARKS
1	Z35847	STRAP	1		X	
2	AZ17982	BALL JOINT	2		X	
3	Z29994	STUD	1		X	LGTH = 420 MM
4	14M7027	NUT	7		X	M6
5	12M7062	LOCK WASHER	4		X	6MM
6	24M7088	WASHER	3		X	7MM
7	19M7160	CAP SCREW	1		X	M6X30
8	Z33919	LEVER	1		X	
9	Z35846	STRAP	1		X	(SUB FOR Z33920)
10	19M7580	CAP SCREW	1		X	M6X28
11	Z26250	WASHER	4		X	6,5MM
12	AZ22791	GUIDE	1		X	
13	19M7162	CAP SCREW	4		X	M8X15
14	12M7006	LOCK WASHER	4		X	8MM
15	14M7029	NUT	4		X	M8
16	Z23940	COMPRESSION SPRING	1		X	
17	AZ22792	LEVER	1		X	
18	L13781	KNOB	1		X	
19	24M7040	WASHER	1		X	11MM
20	11M7011	COTTER PIN	1		X	3X15MM
21	24M7054	WASHER	1		X	6,4MM

COPYRIGHT©1994 - 2008 DEERE & COMPANY Moline, Illinois All rights reserved

(1B14) TIMING GEAR COVER
COUVERCLE DE DISTRIBUTION
STEUERGEHAEUSE
COPERCHIO DISTRIBUZIONE
TAPA DE LA DISTRIBUCION
TIDHJULSKAPA

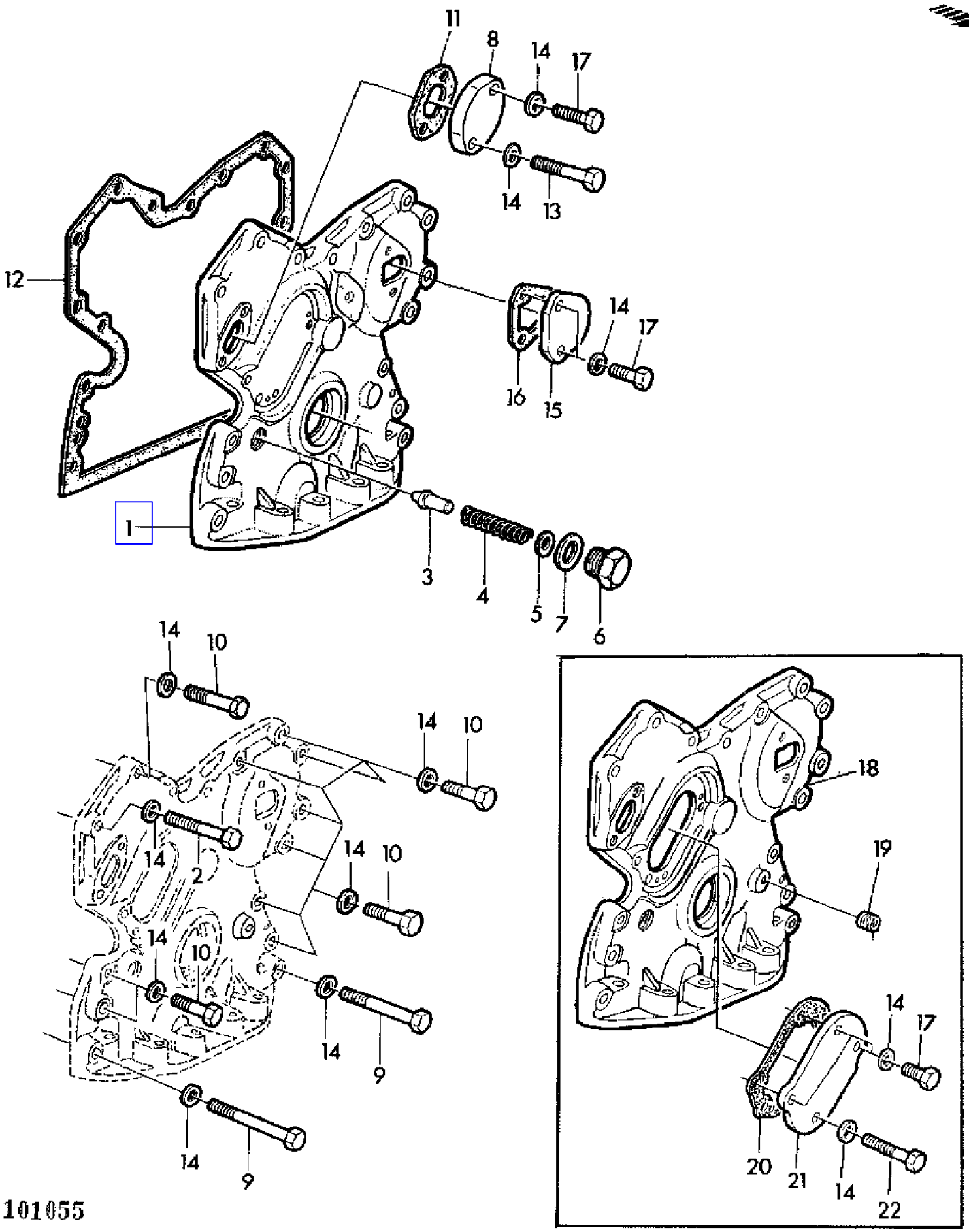

COPYRIGHT©1994 - 2008 DEERE & COMPANY Moline, Illinois All rights reserved

(1B14) TIMING GEAR COVER
COUVERCLE DE DISTRIBUTION
STEUERGEHAEUSE
COPERCHIO DISTRIBUZIONE
TAPA DE LA DISTRIBUCION
TIDHJULSKAPA

KEY	PART NO.	PART NAME	QTY	ENGINE SERIAL NO.		955	REMARKS
1	AR97707	COVER	1	498386	-	X	
2	19H2128	CAP SCREW	1			X	3/8"X3"
3	R83169	VALVE	1			X	(SUB FOR R51516)
4	T27658	SPRING	1			X	
5	24H1290	WASHER	AR			X	21/64"X3/4"X.036"
6	T27657	FITTING PLUG	1			X	
7	A4827R	WASHER	1			X	
8	T23260	COVER	1			X	
9	19H268	CAP SCREW	2			X	3/8"X2-1/2"
10	19H1801	CAP SCREW	10			X	3/8"X2"
11	T20336	GASKET	1			X	
12	T20155	GASKET	1			X	
13	19H1726	CAP SCREW	1			X	3/8"X2-1/4"
14	24H1304	WASHER	AR			X	13/32"X23/64"X.120"
15	T20362	COVER	1			X	
16	R69260	GASKET	1			X	(SUB FOR T20364)
17	19H2284	CAP SCREW	6		- 498385	X	3/8"X7/8"
	19H2284	CAP SCREW	3	498386	-	X	3/8"X7/8"
18	AR58196	COVER	1		- 498385	X	(ORD W/ KEYS 14,17,19-22) (SUB FOR AT19509)
19	15H275	PIPE PLUG	1		- 498385	X	1/4"
20	T20273	GASKET	1		- 498385	X	
21	T20272	COVER	1		- 498385	X	
22	19H1726	CAP SCREW	1		- 498385	X	3/8"X2-1/4"

COPYRIGHT©1994 - 2008 DEERE & COMPANY Moline, Illinois All rights reserved

(2G21) TOOLS
OUTILS
WERKZEUGE
ATTREZZI
HERRAMIENTAS
VERTYG

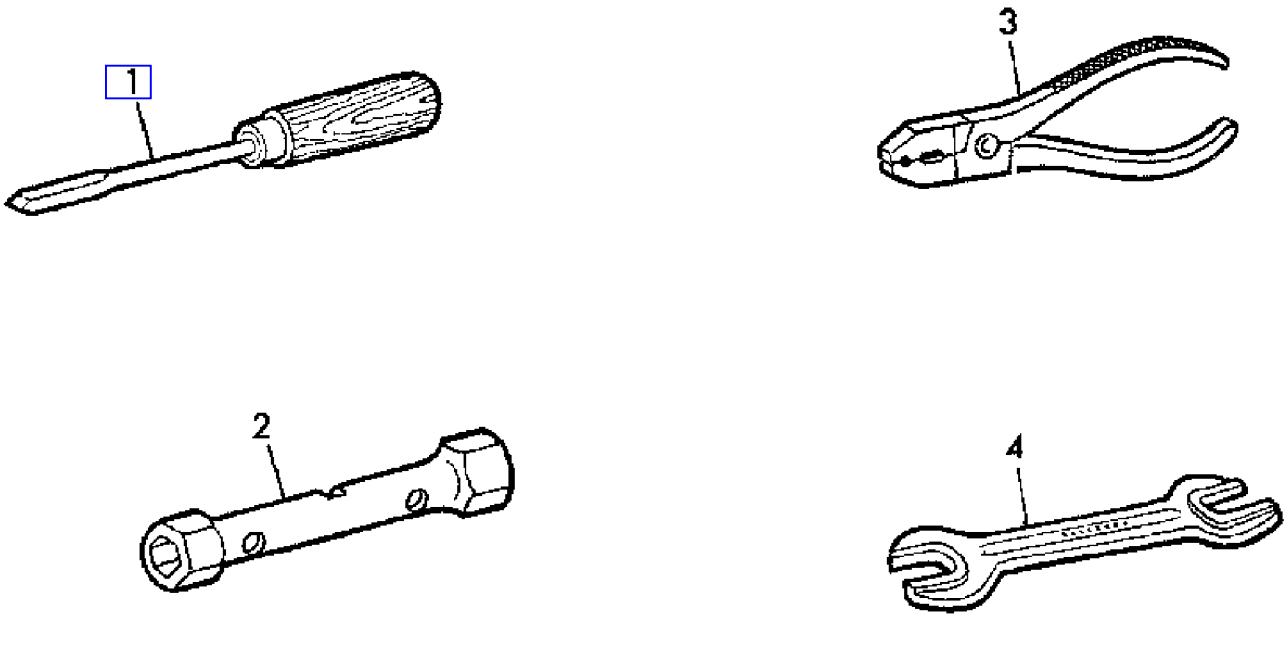

COPYRIGHT©1994 - 2008 DEERE & COMPANY Moline, Illinois All rights reserved

(PC4146) 955 Combine

(2G21) TOOLS
OUTILS
WERKZEUGE
ATTREZZI
HERRAMIENTAS
VERTYG

KEY	PART NO.	PART NAME	QTY	SERIAL NO.	955	REMARKS
1	AZ12802	SCREWDRIVER	1		X	A1
2	31M5217	TOOL	1		X	19X22
3	AZ12801	TOOL	1		X	LGTH = 160 MM
4	31M6768	WRENCH	1		X	10X13
	31M5223	WRENCH	1		X	14X17
	31M5224	WRENCH	1		X	17X19
	31M5226	WRENCH	1		X	19X24
	31M5228	WRENCH	1		X	24X27
	31M6439	WRENCH	1		X	30X36

COPYRIGHT©1994 - 2008 DEERE & COMPANY Moline, Illinois All rights reserved

(2E16) TRAILER DRAWBAR
CROCHET DE REMORQUE
ANHAENGEBOCK
ATTACCO DI TRAINO
DISPOSITIVO DE ENGANCHE PARA REMOLQUES
VAGNSDRAG

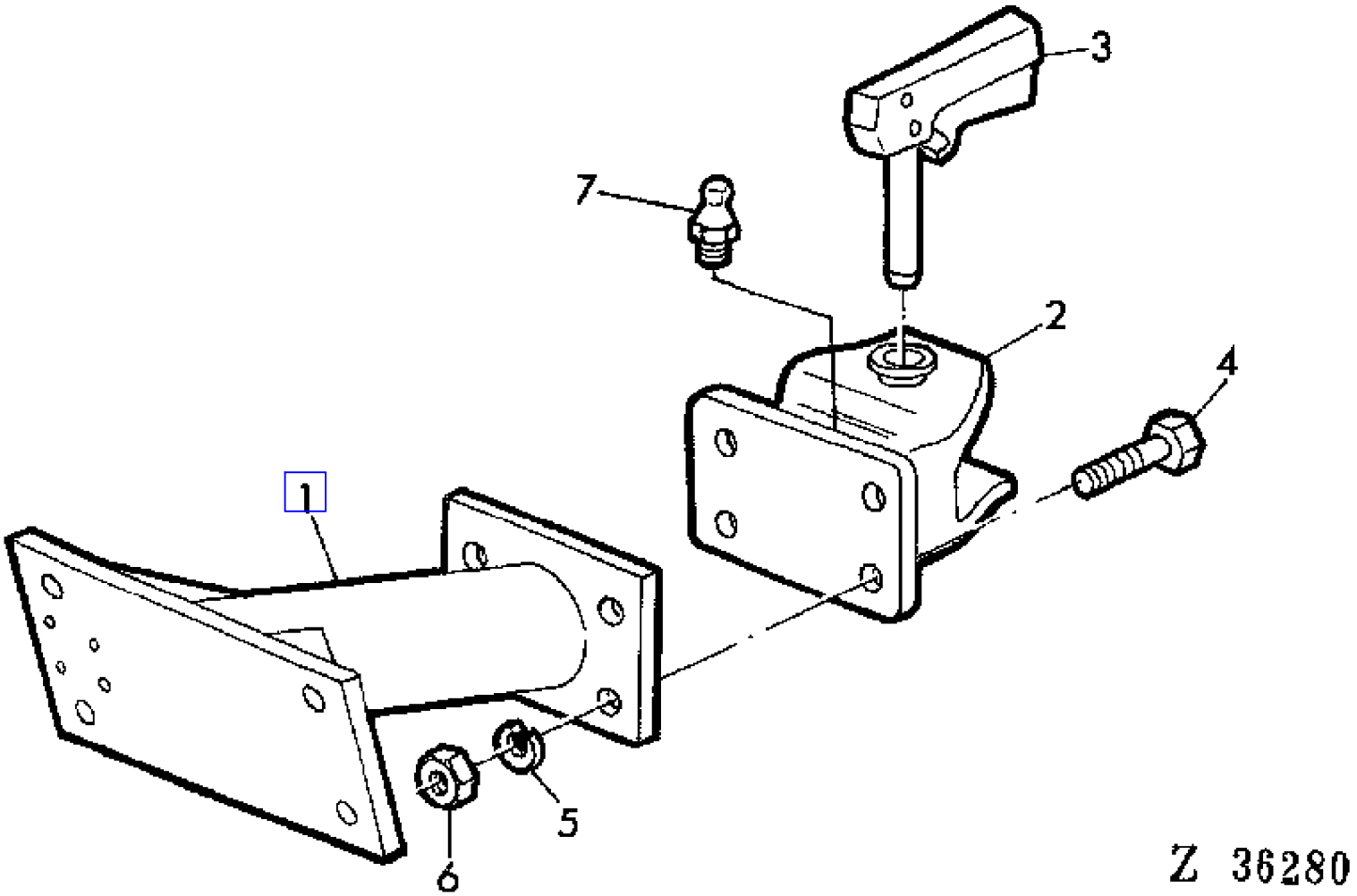

COPYRIGHT©1994 - 2008 DEERE & COMPANY Moline, Illinois All rights reserved

(2E16) TRAILER DRAWBAR
CROCHET DE REMORQUE
ANHAENGEBOCK
ATTACCO DI TRAINO
DISPOSITIVO DE ENGANCHE PARA REMOLQUES
VAGNSDRAG

KEY	PART NO.	PART NAME	QTY	SERIAL NO.	955	REMARKS
1	AZ20486	BRACKET	1		X	
2	AZ15018	HITCH	1		X	
3	AZ15017	PIN	1		X	
4	19M7403	CAP SCREW	4		X	M12X35
5	12M7014	LOCK WASHER	4		X	12MM
6	14M7031	NUT	4		X	M12
7	58M7004	LUBRICATION FITTING	1		X	6X1MM

COPYRIGHT©1994 - 2008 DEERE & COMPANY Moline, Illinois All rights reserved

(2D12) TRANSMISSION BRAKE
FREIN DE BOITE
GETRIEBEBREMSE
FRENO DI TRANSMISSIONE
FRENO DE TRANSMISION
VAXELLADANS BROMS

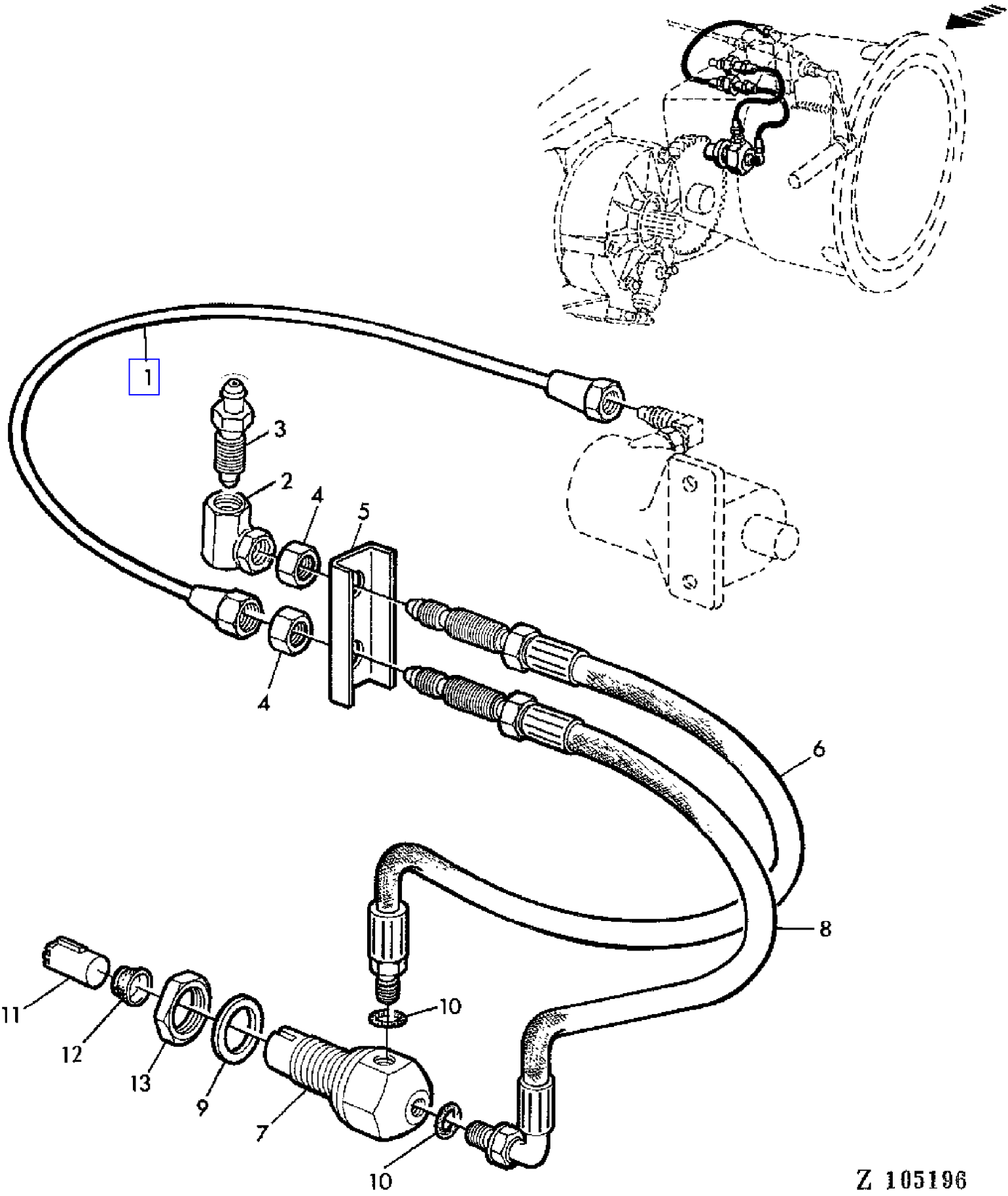

COPYRIGHT©1994 - 2008 DEERE & COMPANY Moline, Illinois All rights reserved

(2D12) TRANSMISSION BRAKE
FREIN DE BOITE
GETRIEBEBREMSE
FRENO DI TRANSMISSIONE
FRENO DE TRANSMISION
VAXELLADANS BROMS

KEY	PART NO.	PART NAME	QTY	SERIAL NO.	955	REMARKS
1	AZ27755	OIL LINE	1		X	
2	AZ34990	ELBOW FITTING	1		X	(SUB FOR Z43627)
3	R21612	BLEED SCREW	1		X	
4	14M7031	NUT	2		X	M12
5	Z47439	CHANNEL	1		X	(SUB FOR Z43628)
6	AZ33681	HYDRAULIC HOSE	1		X	(SUB FOR AZ27754, Z39045)
7	Z38526	COUPLING	1		X	
8	AZ33682	HYDRAULIC HOSE	1		X	(SUB FOR AZ27753, Z39045)
9	51M4467	RING	1		X	
10	R26287	O-RING	2		X	
11	Z38559	PISTON	1		X	
12	Z38521	BOOT	1		X	
13	Z38523	NUT	1		X	

COPYRIGHT©1994 - 2008 DEERE & COMPANY Moline, Illinois All rights reserved

(1G22) TRANSMISSION CASE
CARTER DE BOITE
GETRIEBEGEHAEUSE
SCATOLA CAMBIO
CAJA DE CAMBIOS
VAXELLADSHUS

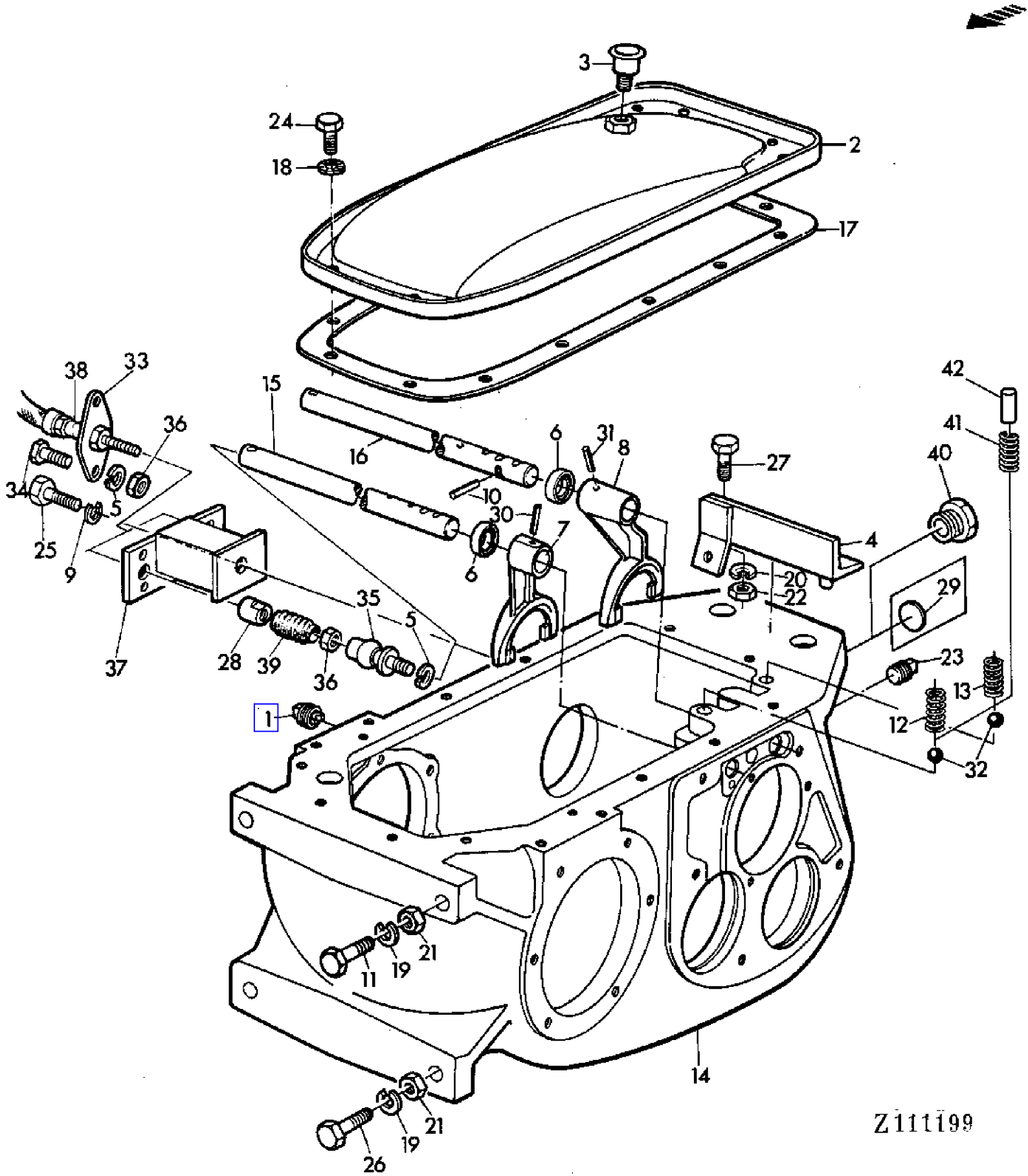

COPYRIGHT©1994 - 2008 DEERE & COMPANY Moline, Illinois All rights reserved

(PC4146) 955 Combine

(1G22) TRANSMISSION CASE
CARTER DE BOITE
GETRIEBEGEHAEUSE
SCATOLA CAMBIO
CAJA DE CAMBIOS
VAXELLADSHUS

KEY	PART NO.	PART NAME	QTY	SERIAL NO.		955	REMARKS
1	AH18240	HOSE FITTING	1			X	
2	AH20867	COVER	1			X	ASSY, INCL KEY 3
3	AH20868	BREATHER	1			X	
4	AZ18543	HOLDER	1		- 017447	X	
5	12M7012	LOCK WASHER	4			X	6MM
6	AP19599	SEAL	2			X	
7	Z11299	SHIFTER	1			X	(SUB FOR PK1826H)
8	Z11298	SHIFTER	1			X	(SUB FOR H11479)
9	H20551	LOCK WASHER	1			X	
10	H33500	COTTER PIN	1			X	
11	H61990	CAP SCREW	2		- 014887	X	
	Z37855	CAP SCREW	2	014888	-	X	
12	Z43922	COMPRESSION SPRING	1			X	(ORD T24527, Z47982) (SUB FOR H75251, Z38438)
13	Z38439	COMPRESSION SPRING	1			X	(SUB FOR H75252) (ORD T24527, Z47982)
14	Z11175	TRANSMISSION CASE	1			X	(SUB FOR Z10704)
15	Z32602	SHIFTER ROD	1			X	
16	Z38012	SHIFTER ROD	1			X	(SUB FOR Z32601)
17	P48666	GASKET	1			X	
18	12H291	LOCK WASHER	14			X	5/16"
19	12H301	LOCK WASHER	4			X	1/2"
20	12M5846	LOCK WASHER	AR			X	18MM
21	14H809	NUT	4			X	1/2"
22	14M7204	NUT	1			X	M18
23	15H238	PIPE PLUG	1			X	3/4"
24	19H1813	CAP SCREW	14			X	5/16"X5/8"
25	19H1822	CAP SCREW	1			X	7/16"X1"
26	R41514	CAP SCREW	2			X	1/2"X2-1/8"
27	19M7520	CAP SCREW	2			X	M18X45
28	AZ21203	NUT	2			X	
29	30H07	GATHERING NUMBER	1		- 017017	X	
30	34H89	SPRING PIN	2			X	7/32"X1-1/8"
31	34H92	SPRING PIN	1			X	7/32"X1/2"
32	405R	BALL	2			X	
33	AZ21204	BALL JOINT	4			X	
34	19M7375	CAP SCREW	4			X	M6X18
35	AZ21471	BALL STUD	2			X	
36	14M7027	NUT	4			X	M6
37	AZ21468	SUPPORT	1		- 017447	X	
	AZ25875	SUPPORT	1	017448	-	X	
38	AZ29787	PUSH PULL CABLE	1			X	ASSY, INCL KEYS 28,33,39 (SUB FOR AZ21469)
39	Z32405	BOOT	2			X	
40	R39112	FITTING	1			X	
41	T24527	SPRING	2			X	
42	Z47982	PIN	2			X	

COPYRIGHT©1994 - 2008 DEERE & COMPANY Moline, Illinois All rights reserved

(1G22) TRANSMISSION CASE
CARTER DE BOITE
GETRIEBEGEHAEUSE
SCATOLA CAMBIO
CAJA DE CAMBIOS
VAXELLADSHUS

KEY	PART NO.	PART NAME	QTY	SERIAL NO.	955	REMARKS

COPYRIGHT©1994 - 2008 DEERE & COMPANY Moline, Illinois All rights reserved

(1G24) TRANSMISSION GEARS
PIGNONS DE BOITE
GETRIEBERAEDER
INGRANAGGI DEL CAMBIO
ENGRANAJES DEL CAMBIO
VAXELHJUL

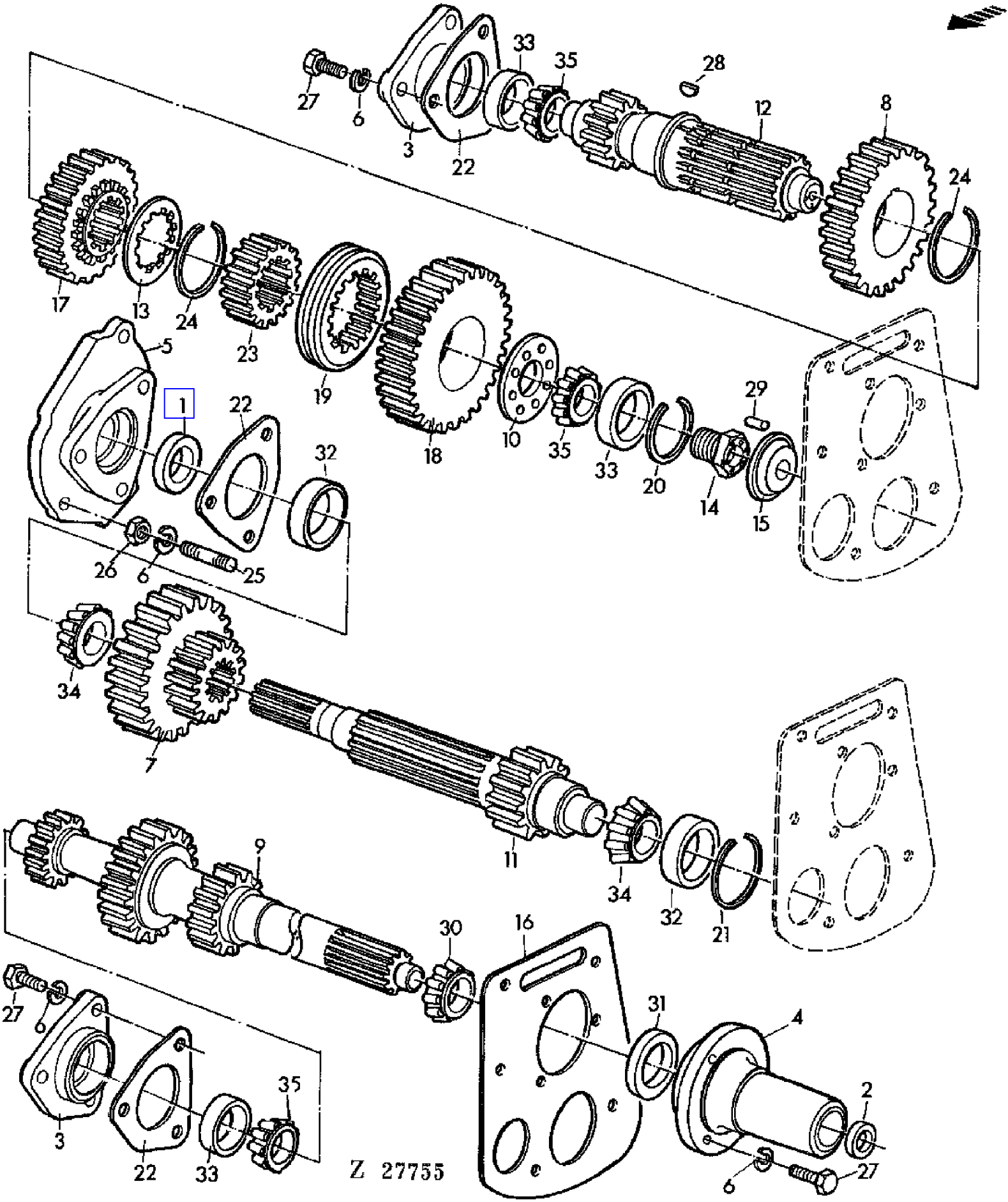

COPYRIGHT©1994 - 2008 DEERE & COMPANY Moline, Illinois All rights reserved

(PC4146) 955 Combine

(1G24) TRANSMISSION GEARS
PIGNONS DE BOITE
GETRIEBERAEDER
INGRANAGGI DEL CAMBIO
ENGRANAJES DEL CAMBIO
VAXELHJUL

KEY	PART NO.	PART NAME	QTY	SERIAL NO.		955	REMARKS
1	AH21815	SEAL	1			X	
2	AP19572	SEAL	1		- 026952	X	
	AZ19023	SEAL	1	026953	-	X	
3	H10163	HOUSING	2			X	
4	H10979	HOUSING	1		- 026952	X	
	Z10974	HUB	1	026953	-	X	
5	H11496	HOUSING	1			X	
6	H20551	LOCK WASHER	12			X	
7	H32057	GEAR	1			X	
8	H33491	GEAR	1			X	
9	H33495	SHAFT	1		- 026952	X	
	Z10928	SHAFT	1	026953	-	X	
10	Z40172	THRUST WASHER	1			X	(SUB FOR H35906)
11	H36519	SHAFT	1			X	
12	H64031	SHAFT	1			X	
13	H103167	WASHER	1			X	(SUB FOR H64035)
14	H64036	BOLT	1			X	
15	H64037	SHIELD	1			X	
16	Z45228	GASKET	1			X	(SUB FOR H64042, Z38278)
17	H75179	GEAR	1			X	
18	H75180	GEAR	1			X	
19	H82165	SYNCHRONIZER	1			X	
20	P42669	RING	1			X	
21	P46356	RING	1			X	
22	P49116	SHIM	AR			X	0.002"
	P48652	SHIM	AR			X	0.003"
	P49117	SHIM	AR			X	0.005"
	P49118	SHIM	AR			X	0.010"
	P49119	SHIM	AR			X	0.020"
23	R26255	GEAR	1			X	
24	R26266	SNAP RING	2			X	
25	L851T	STUD	3			X	
26	14H807	NUT	3			X	7/16"
27	19H1821	CAP SCREW	9			X	7/16"X1-1/4"
28	26H23	SHAFT KEY	1			X	
29	34H245	SPRING PIN	1			X	1/8"X5/8"
30	JD7207	BEARING CONE	1			X	
31	JD7409	BEARING CUP	1			X	
32	JD7424	BEARING CUP	2			X	
33	JD7449	BEARING CUP	3			X	
34	JD8100	BEARING CONE	2			X	
35	JD8134	BEARING CONE	3			X	

COPYRIGHT©1994 - 2008 DEERE & COMPANY Moline, Illinois All rights reserved

(2E14) TRAVERSE BRACKET AND SUPPORTS
TRAVERSE ET SUPPORTS
QUERTRAEGER UND ABSTUETZUNGEN
STAFFE E SUPPORTI TRASVERSALI
VIGA TRANSVERSAL Y SOPORTES
TVAERPLATTA OCH FAESTEN

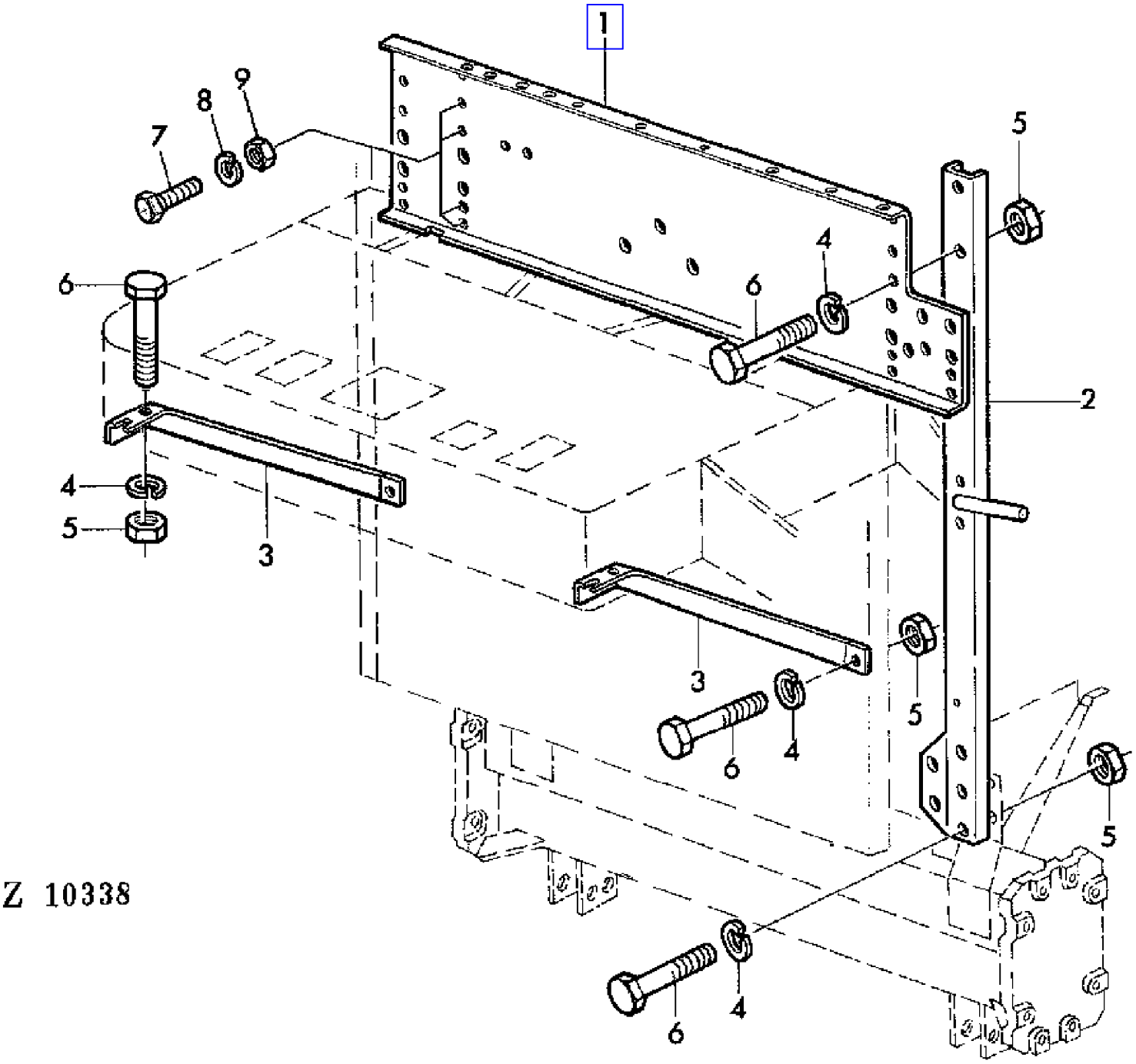

COPYRIGHT©1994 - 2008 DEERE & COMPANY Moline, Illinois All rights reserved

(2E14) TRAVERSE BRACKET AND SUPPORTS
TRAVERSE ET SUPPORTS
QUERTRAEGER UND ABSTUETZUNGEN
STAFFE E SUPPORTI TRASVERSALI
VIGA TRANSVERSAL Y SOPORTES
TVAERPLATTA OCH FAESTEN

KEY	PART NO.	PART NAME	QTY	SERIAL NO.	955	REMARKS
1	Z32532	CHANNEL	1		X	
2	AZ21461	CHANNEL	1	- 004988	X	
	AZ24508	CHANNEL	1	004989 -	X	
3	Z32787	BRACE	2		X	
4	12M7013	LOCK WASHER	16		X	10MM
5	14M7140	NUT	16		X	M10
6	19M7168	CAP SCREW	16		X	M10X30
7	19M6283	CAP SCREW	4		X	M8X18
8	12M7008	LOCK WASHER	4		X	8MM
9	14M7029	NUT	4		X	M8

COPYRIGHT©1994 - 2008 DEERE & COMPANY Moline, Illinois All rights reserved

(1F14) TURN-SIGNAL AND TAIL LIGHTS
FEUX CLIGNOTANTS ET ARRIERE
BLINK-UND SCHLUSSLEUCHTEN
INDICATORI DI DIREZIONE E LUCI DI CODA
LUCES INTERMITENTES Y PILOTOS TRASEROS
BLINKERS OCH BAKLJUS

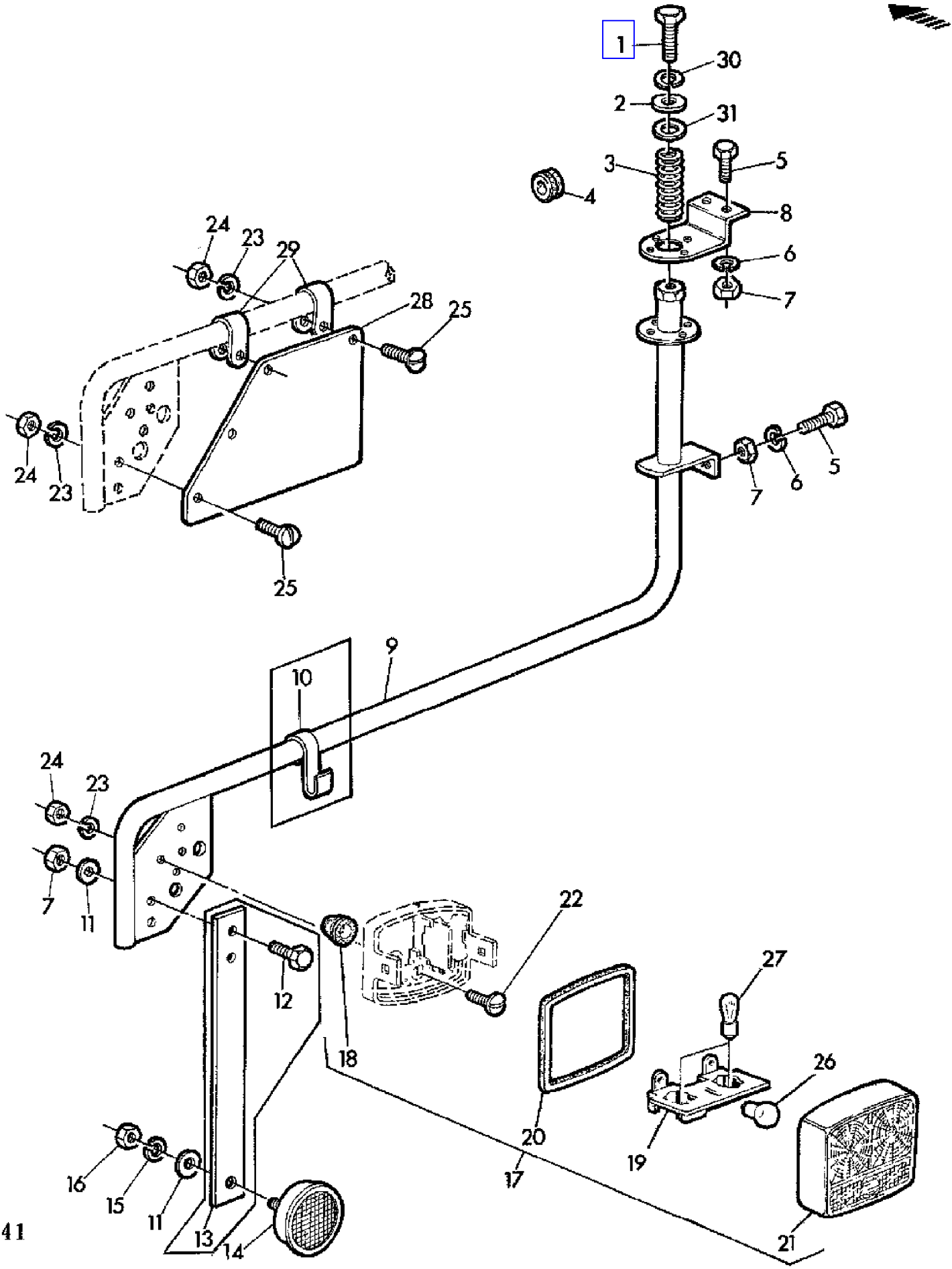

COPYRIGHT©1994 - 2008 DEERE & COMPANY Moline, Illinois All rights reserved

(1F14) TURN-SIGNAL AND TAIL LIGHTS
FEUX CLIGNOTANTS ET ARRIERE
BLINK-UND SCHLUSSLEUCHTEN
INDICATORI DI DIREZIONE E LUCI DI CODA
LUCES INTERMITENTES Y PILOTOS TRASEROS
BLINKERS OCH BAKLJUS

KEY	PART NO.	PART NAME	QTY	SERIAL NO.	955	REMARKS
1	19M7168	CAP SCREW	2		X	M10X30
2	24M7101	WASHER	2		X	11,5MM
3	Z24302	COMPRESSION SPRING	2		X	
4	Z21238	GROMMET	AR		X	
5	19M7139	CAP SCREW	AR		X	M8X20
6	12M7008	LOCK WASHER	AR		X	8MM
7	14M7029	NUT	AR		X	M8
8	Z22215	ARRESTOR	2		X	
9	AZ23023	BRACKET	2		X	
	AZ23836	BRACKET	2		X	10', LH, AR
10	Z34123	HOOK	2	- 013738	X	
11	24M7088	WASHER	AR		X	6,6MM
12	19M7284	CAP SCREW	AR	- 013738	X	M8X18
13	Z34122	STRAP	2	- 013738	X	
14	L39871	REFLECTOR	2		X	INCL KEYS 15,16 (SUB FOR 99M6488)
15	12M7012	LOCK WASHER	2		X	6MM
16	14M7027	NUT	2		X	M6
17	AT43601	LAMP	1		X	RH, ASSY, INCL KEYS 18-21 (SUB FOR AZ23566)
	AT43600	LAMP	1		X	LH, ASSY, INCL KEYS 18-21 (SUB FOR AZ23565)
	AL26799	LAMP	1		X	AR, LH, ASSY, INCL KEYS 18-21 (SUB FOR AZ23630)
18	L31774	GROMMET	2		X	(SUB FOR Z34569)
19	L31777	HOLDER	2		X	(SUB FOR AZ23631)
20	L31778	GASKET	2		X	(SUB FOR Z34572)
21	L31781	LENS	2		X	RH (SUB FOR Z34573)
	L31780	LENS	2		X	LH (SUB FOR Z34574)
	L31776	LENS	2		X	AR (SUB FOR Z34571)
22	21M7142	SCREW	4		X	M5X25
23	12M7011	LOCK WASHER	AR		X	5MM
24	14M7028	NUT	AR		X	M5
25	21M7141	SCREW	AR		X	M5X20, AR
26	57M7013	BULB	2		X	12V 10W
27	57M7014	BULB	4		X	12V 21W
28	Z34124	PLATE	1		X	AR
29	Z21993	CLAMP	2		X	AR (SUB FOR Z22568)
30	12M7013	LOCK WASHER	2		X	10MM
31	Z40291	SPACER	2		X	

COPYRIGHT©1994 - 2008 DEERE & COMPANY Moline, Illinois All rights reserved

(4F07) UNLOADING AUGER
VIS DE VIDANGE
ENTLEERSCHNECKE
COCLEA SCARICO
SINFIN DE DESCARGA DEL TANQUE DE GRANO
TOEMNINGSSKRUV

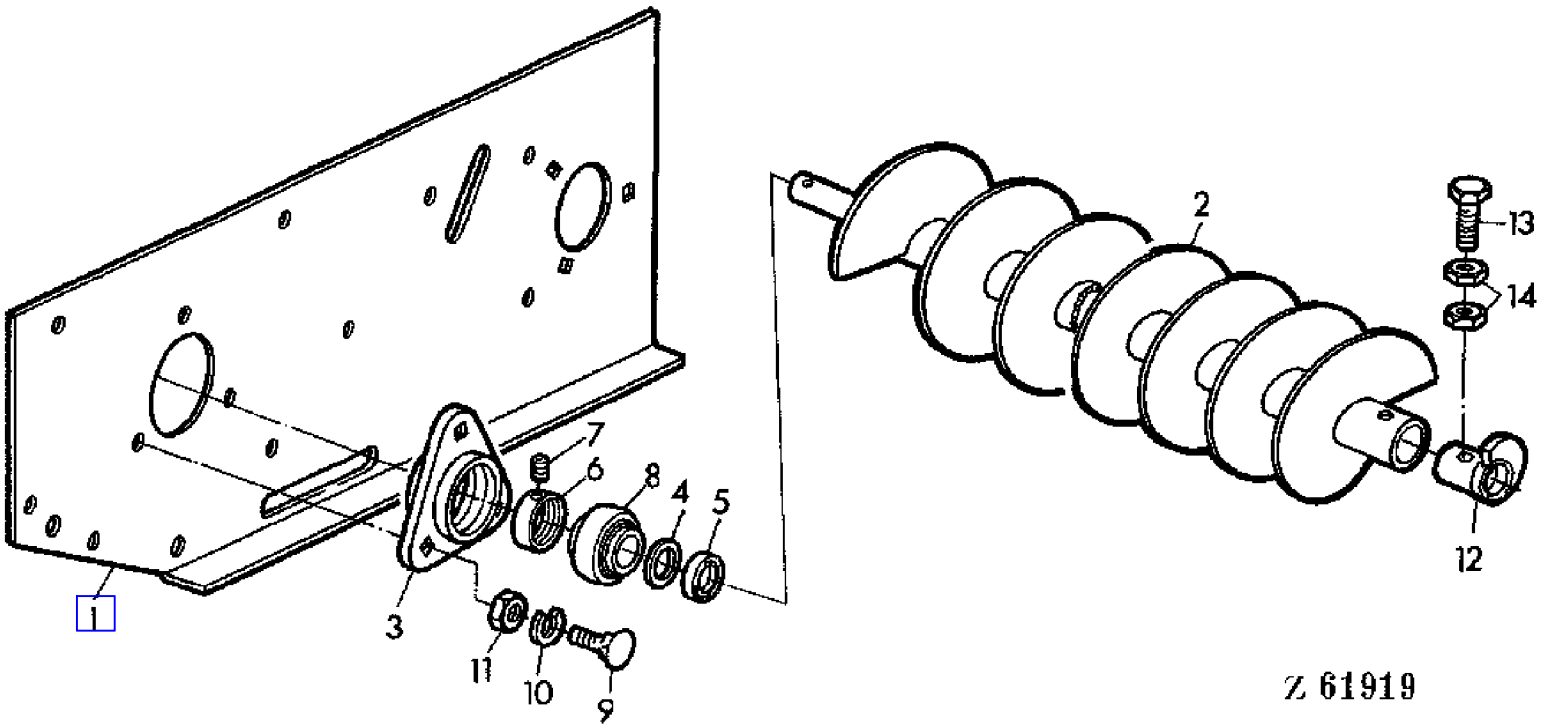

COPYRIGHT©1994 - 2008 DEERE & COMPANY Moline, Illinois All rights reserved

(PC4146) 955 Combine

(4F07) UNLOADING AUGER
VIS DE VIDANGE
ENTLEERSCHNECKE
COCLEA SCARICO
SINFIN DE DESCARGA DEL TANQUE DE GRANO
TOEMNINGSSKRUV

KEY	PART NO.	PART NAME	QTY	SERIAL NO.	955	REMARKS
1	Z21078	BRACKET	1		X	RH
2	AZ21049	AUGER	1		X	
3	Z10237	FLANGE	1		X	
4	24M7093	WASHER	1		X	36MM
5	Z22126	WASHER	1		X	
6	AZ10045	ECCENTRIC LOCKING COLLAR	1		X	ASSY, INCL KEY 7
7	AZ19844	SET SCREW	1		X	KIT
8	JD10384	BEARING	1		X	(SUB FOR JD39106)
9	03M7017	BOLT	3		X	M10X25
10	12M7013	LOCK WASHER	3		X	10MM
11	14M7140	NUT	3		X	M10
12	Z10702	DRIVER	1		X	
13	19M7364	CAP SCREW	1		X	M12X80
14	14M7031	NUT	2		X	M12

COPYRIGHT©1994 - 2008 DEERE & COMPANY Moline, Illinois All rights reserved

(4F16) UNLOADING AUGER
VIS DE GOULOTTE
AUSLAUFSCHNECKE
COCLEA SCARICO
SINFIN DE LA MANGA DE DESCARGA
TOMNINGSSKRUV

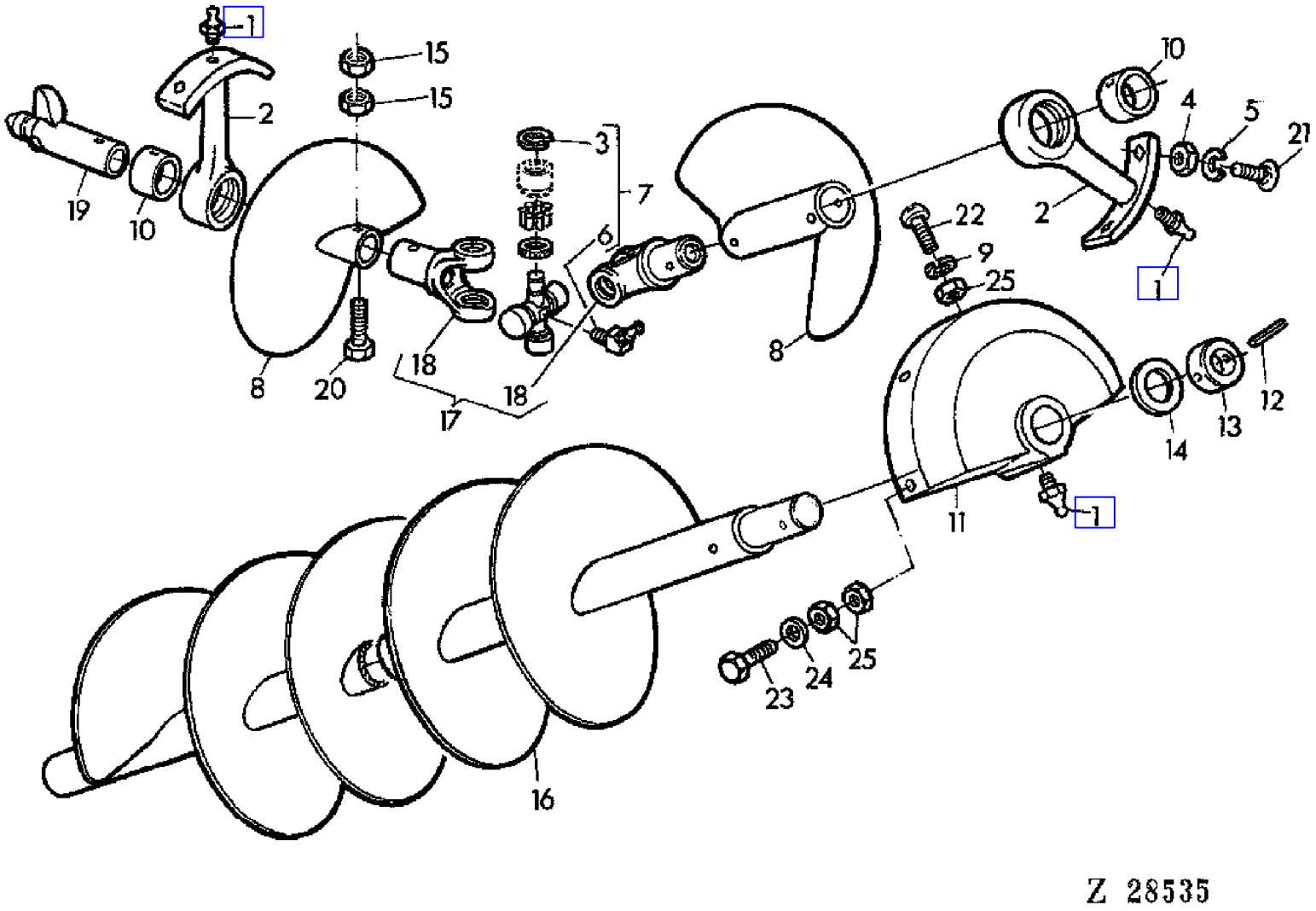

COPYRIGHT©1994 - 2008 DEERE & COMPANY Moline, Illinois All rights reserved

(4F16) UNLOADING AUGER
VIS DE GOULOTTE
AUSLAUFSCHNECKE
COCLEA SCARICO
SINFIN DE LA MANGA DE DESCARGA
TOMNINGSSKRUV

KEY	PART NO.	PART NAME	QTY	SERIAL NO.	955	REMARKS
1	58M5574	LUBRICATION FITTING	3		X	
2	AZ10539	BRACKET	2		X	ASSY, INCL KEY 10
3	L23948	SNAP RING	4		X	
4	14M7140	NUT	4		X	M10
5	12M7013	LOCK WASHER	4		X	10MM
6	58M5577	LUBRICATION FITTING	1		X	
7	AL20182	CROSS AND BEARING ASSEMBLY	1		X	ASSY
8	AZ10509	FLIGHT	2		X	
9	12M7008	LOCK WASHER	3		X	8MM
10	Z21088	BUSHING	2		X	
11	Z10118	BRACKET	1		X	
12	34M7049	SPRING PIN	1		X	8X50MM
13	Z26153	LOCKING COLLAR	1		X	
14	Z21067	WASHER	1		X	
15	14M7167	LOCK NUT	AR		X	M10
16	AZ23294	AUGER	1		X	LGTH = 2133 MM 83.97"
	AZ23293	AUGER	1		X	LGTH = 3133 MM 123.34"
17	AZ10486	UNIVERSAL JOINT	1	- 020422	X	ASSY, INCL KEYS 7,18
	AZ28870	UNIVERSAL JOINT	1	020423 -	X	(SUB FOR AZ10486)
18	Z10121	YOKE, WITH SHAFT	2	- 020422	X	(ORD Z11263, (2) 14M7167, 19M7180)
	Z11263	UNIVERSAL JOINT YOKE	2	020423 -	X	(SUB FOR Z10122)
19	Z10375	DRIVER	1		X	
20	19M7180	CAP SCREW	6		X	M10X45
21	03M7085	BOLT	4		X	M10X30
22	21M7030	SCREW	3		X	M8X20
23	19M7288	CAP SCREW	2		X	M8X30
24	24M7036	WASHER	2		X	9MM
25	14M7029	NUT	7		X	M8

COPYRIGHT©1994 - 2008 DEERE & COMPANY Moline, Illinois All rights reserved

(4F10) UNLOADING AUGER DRIVE I
ENTRAINEMENT VIS DE VIDANGE I
ENTLEERSCHNECKEN-ANTRIEB I
COMANDO COCLEA SCARICO I
TRANSMISION DEL SINFIN DE DESCARGA I
TOEMNINGSSKRUVENS DRIVNING I

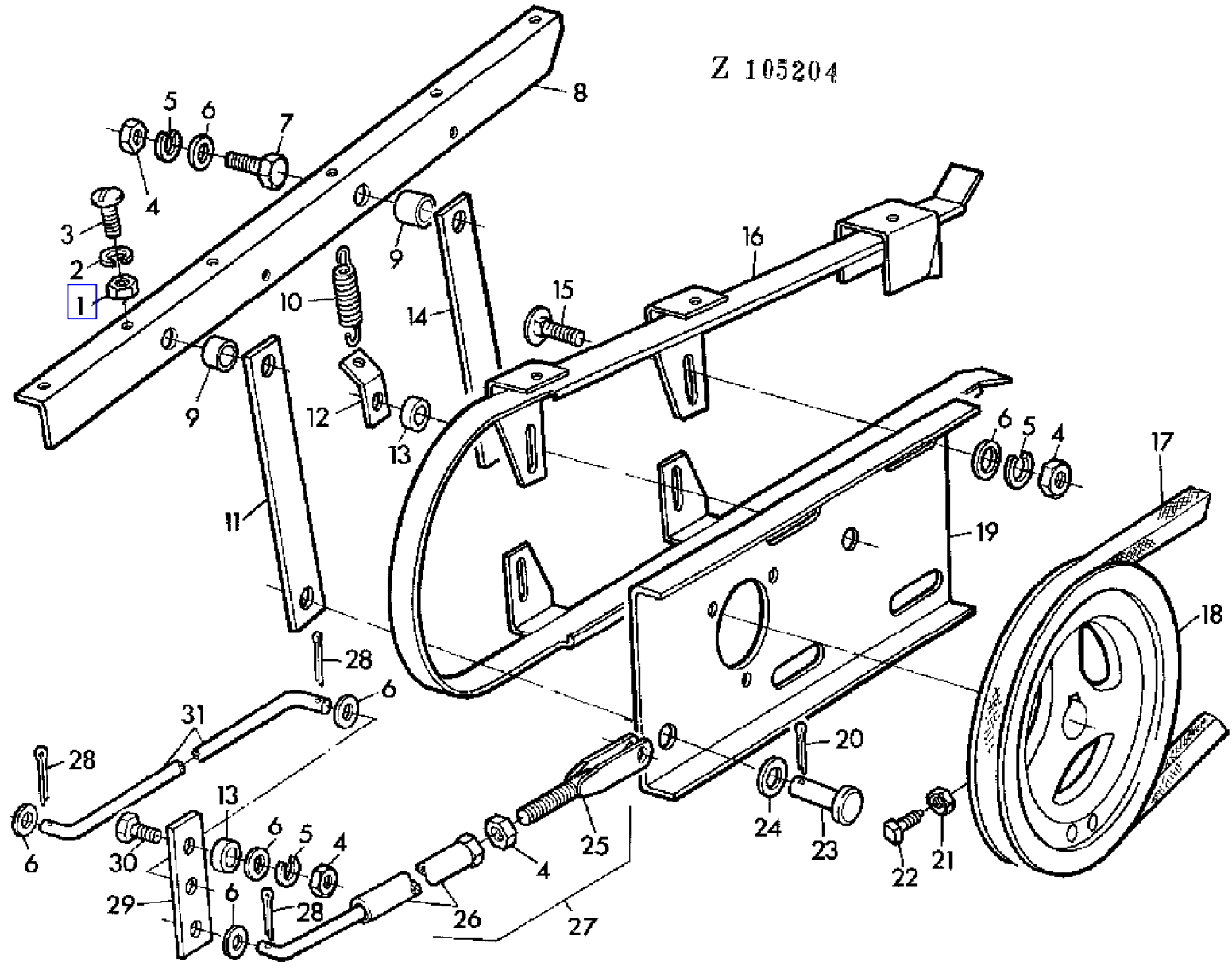

COPYRIGHT©1994 - 2008 DEERE & COMPANY Moline, Illinois All rights reserved

(4F10) UNLOADING AUGER DRIVE I
ENTRAINEMENT VIS DE VIDANGE I
ENTLEERSCHNECKEN-ANTRIEB I
COMANDO COCLEA SCARICO I
TRANSMISION DEL SINFIN DE DESCARGA I
TOEMNINGSSKRUVENS DRIVNING I

KEY	PART NO.	PART NAME	QTY	SERIAL NO.	955	REMARKS
1	14M7029	NUT	12		X	M8
2	12M7008	LOCK WASHER	12		X	8MM
3	21M7160	SCREW	6		X	M8X18
4	14M7140	NUT	8		X	M10
5	12M7013	LOCK WASHER	8		X	10MM
6	24M7040	WASHER	7		X	11MM
7	19M7167	CAP SCREW	2		X	M10X25
8	Z21324	ANGLE	1		X	
9	Z21318	SPACER	2		X	
10	Z21325	EXTENSION SPRING	1		X	
11	Z32542	STRAP	1		X	
12	Z22572	HOLDER	1		X	(SUB FOR Z21322)
13	Z21319	SPACER	2		X	
14	Z32543	STRAP	1		X	
15	03M7017	BOLT	4		X	M10X25
16	AZ10592	GUIDE	1		X	
17	Z21400	BELT	1		X	
18	Z10070	PULLEY	1		X	
19	Z21315	HOLDER	1		X	LH
20	11M7011	COTTER PIN	1		X	3X15MM
21	14M7152	NUT	1		X	M10
22	Z26249	SET SCREW	1		X	
23	Z24485	PIN	1		X	
24	24M7106	WASHER	1		X	10,5MM
25	AZ19586	YOKE	1		X	
26	AZ20368	ADJUSTER	1		X	
27	AZ19588	ADJUSTER	1		X	ASSY, INCL KEYS 8,41,43
28	11M7019	COTTER PIN	3		X	4X20MM
29	Z21323	PLATE	1		X	
30	19M7168	CAP SCREW	1		X	M10X30
31	Z21316	ROD	1		X	

COPYRIGHT©1994 - 2008 DEERE & COMPANY Moline, Illinois All rights reserved

(4F12) UNLOADING AUGER DRIVE II
ENTRAINEMENT VIS DE VIDANGE II
ENTLEERSCHNECKEN-ANTRIEB II
COMANDO COCLEA SCARICO II
TRANSMISION DEL SINFIN DE DESCARGA II
TOEMNINGSSKRUVENS DRIVNING II

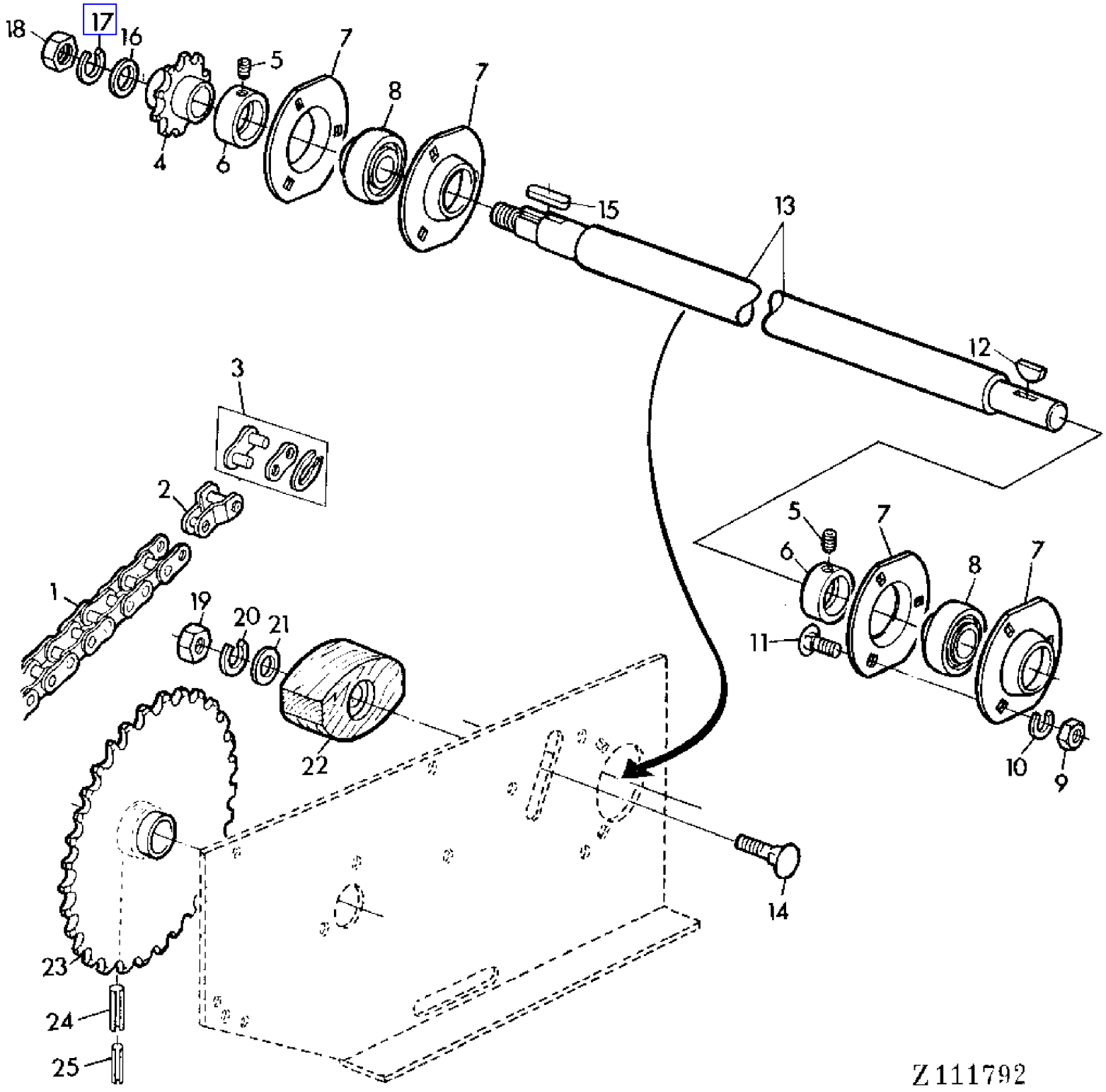

COPYRIGHT©1994 - 2008 DEERE & COMPANY Moline, Illinois All rights reserved

(4F12) UNLOADING AUGER DRIVE II
ENTRAINEMENT VIS DE VIDANGE II
ENTLEERSCHNECKEN-ANTRIEB II
COMANDO COCLEA SCARICO II
TRANSMISION DEL SINFIN DE DESCARGA II
TOEMNINGSSKRUVENS DRIVNING II

KEY	PART NO.	PART NAME	QTY	SERIAL NO.	955	REMARKS
1	AZ10591	LINK CHAIN	1		X	L = 117, ASSY, INCL KEYS 15,16
2	AZ12881	LINK	1		X	
3	AL14207	LINK	1		X	
4	Z20104	CHAIN SPROCKET	1		X	Z = 13
5	AZ19843	SET SCREW	1		X	KIT
6	AZ10044	ECCENTRIC LOCKING COLLAR	2		X	ASSY, INCL KEY 12
7	P47232	PRESSED FLANGED HOUSING	4		X	
8	JD39102	BALL BEARING	2		X	
9	14M7029	NUT	12		X	M8
10	12M7008	LOCK WASHER	12		X	8MM
11	03M7054	BOLT	6		X	M8X20
12	26M4228	SHAFT KEY	2		X	8X11MM
13	Z26815	SHAFT	1		X	
14	03M7104	BOLT	1		X	M10X70
15	49M6496	SHAFT KEY	1		X	5X5X22MM
16	24M7038	WASHER	1		X	14MM
17	12M7014	LOCK WASHER	1		X	12MM
18	14M7031	NUT	1		X	M12
19	14M7140	NUT	8		X	M10
20	12M7013	LOCK WASHER	8		X	10MM
21	24M7040	WASHER	7		X	11MM
22	Z21312	TIGHTENER	1		X	
23	AZ10494	CHAIN SPROCKET	1		X	Z = 56
24	34M7054	SPRING PIN	1		X	10X50MM
25	34M7044	SPRING PIN	1		X	6X50MM

COPYRIGHT©1994 - 2008 DEERE & COMPANY Moline, Illinois All rights reserved

(PC4146) 955 Combine

(4F14) UNLOADING HOUSING
GOULOTTE DE VIDANGE
AUSLAUFROHR
TUBO SCARICO
MANGA DE DESCARGA
TOEMNINGSROER

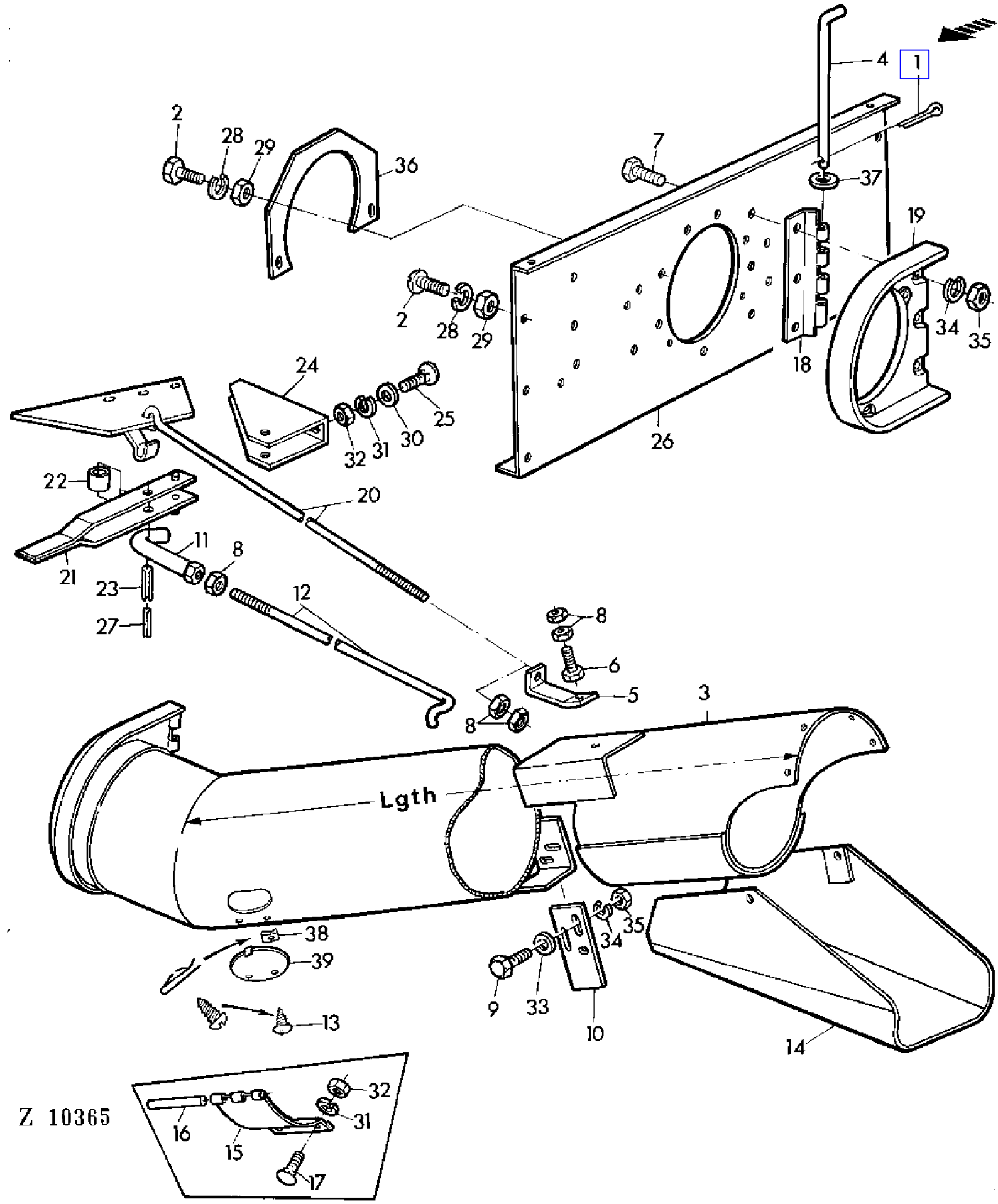

COPYRIGHT©1994 - 2008 DEERE & COMPANY Moline, Illinois All rights reserved

(4F14) UNLOADING HOUSING
GOULOTTE DE VIDANGE
AUSLAUFROHR
TUBO SCARICO
MANGA DE DESCARGA
TOEMNINGSROER

KEY	PART NO.	PART NAME	QTY	SERIAL NO.		955	REMARKS
1	11M7019	COTTER PIN	1			X	4X20MM
2	21M7031	SCREW	10			X	M6X15
3	AZ22605	SPOUT	AR			X	LGTH = 2464 MM 97" (ORD W/ KEYS 13,
	AZ22604	SPOUT	AR			X	LGTH = 3464 MM 136" (ORD W/ KEYS 13, 38,39
4	Z21090	PIN	1			X	
5	Z21081	HOLDER	1			X	
6	19M7387	CAP SCREW	1			X	M12X40
7	19M7168	CAP SCREW	3			X	M10X30
8	14M7031	NUT	AR			X	M12
9	19M7167	CAP SCREW	3			X	M10X25
10	Z31140	ARRESTOR	1			X	
11	AZ15701	HOOK	1			X	
12	Z21084	ROD	1			X	
13	37M7009	SCREW	2	003787	-	X	5,5X19MM
14	AZ10515	CHUTE	1			X	
15	Z21089	COVER	1		- 003786	X	
16	Z21066	PIN	1		- 003786	X	
17	03M7094	BOLT	2		- 003786	X	M8X30
18	Z25595	HINGE	1			X	
19	Z10312	HINGE	1			X	
20	AZ17224	CRADLE	1			X	
21	AZ15704	LATCH	1			X	
22	Z26916	SPACER	1			X	
23	34M7054	SPRING PIN	1			X	10X50MM
24	Z26919	SUPPORT	1			X	
25	21M7089	SCREW	2			X	M8X20
26	Z31131	PLATE	1			X	
27	34M7044	SPRING PIN	1			X	
28	12M7012	LOCK WASHER	10			X	6MM
29	14M7027	NUT	10			X	M6
30	24M7036	WASHER	8			X	9MM
31	12M7008	LOCK WASHER	8			X	8MM
32	14M7029	NUT	8			X	M8
33	24M7040	WASHER	2			X	11MM
34	12M7013	LOCK WASHER	5			X	10MM
35	14M7140	NUT	5			X	M10
36	Z29153	SHEET	1			X	
37	24M7047	WASHER	1			X	13MM
38	Z20443	NUT	2	003787	-	X	
39	Z22294	COVER	1	003787	-	X	

COPYRIGHT©1994 - 2008 DEERE & COMPANY Moline, Illinois All rights reserved

(4F17) UNLOADING HOUSING SUPPORT
SUPPORT DE GOULOTTE
STUETZE FUER ENTLEERROHR
SUPPORTO TUBO SCARICO
SOPORTE PARA LA MANGA DE DESCARGA
STOD FOR TOMNINGSROR

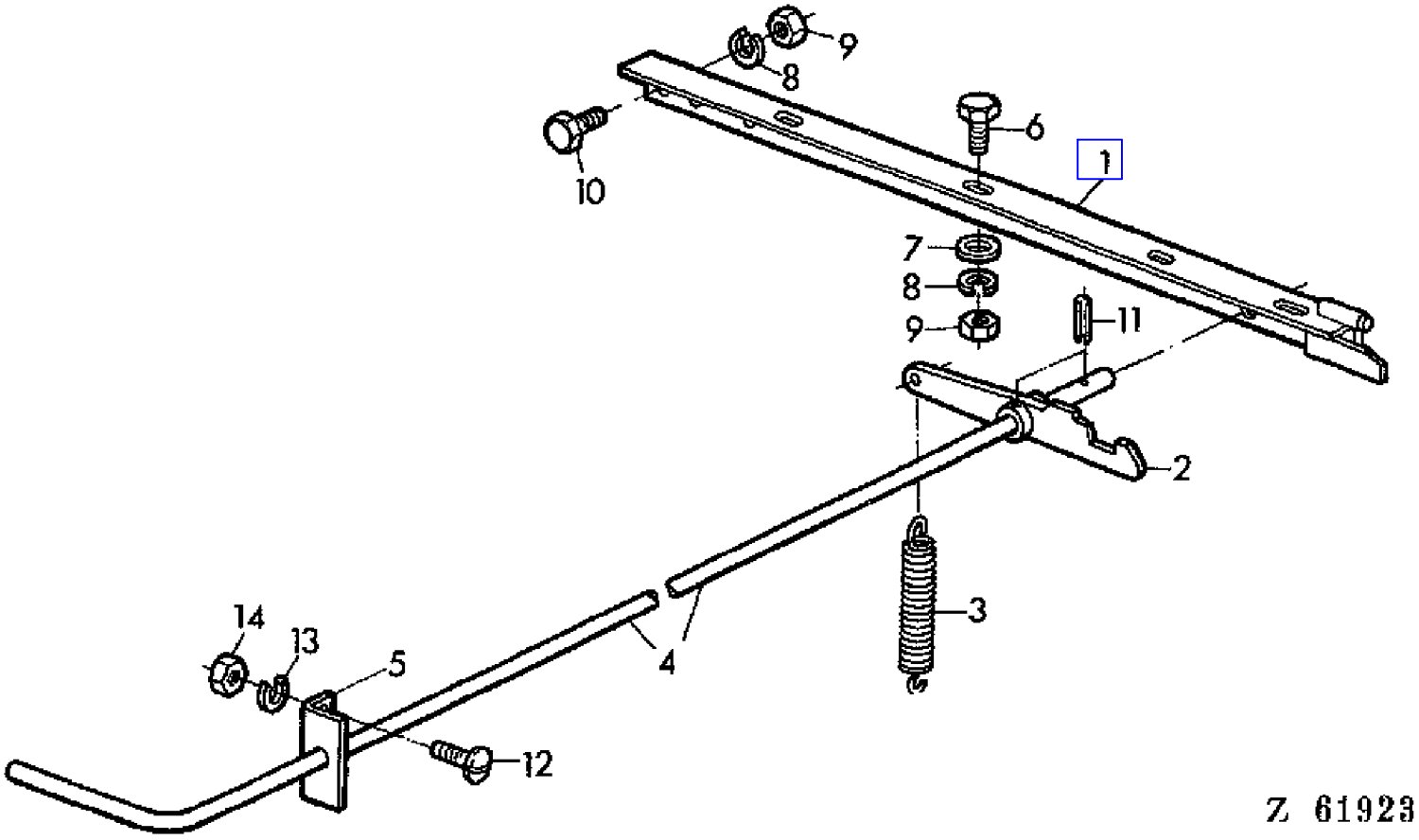

COPYRIGHT©1994 - 2008 DEERE & COMPANY Moline, Illinois All rights reserved

(4F17) UNLOADING HOUSING SUPPORT
SUPPORT DE GOULOTTE
STUETZE FUER ENTLEERROHR
SUPPORTO TUBO SCARICO
SOPORTE PARA LA MANGA DE DESCARGA
STOD FOR TOMNINGSROR

KEY	PART NO.	PART NAME	QTY	SERIAL NO.	955	REMARKS
1	AZ19774	SUPPORT	1		X	
2	Z10773	LATCH	1		X	
3	Z22925	EXTENSION SPRING	1		X	
4	Z31139	TUBE	1		X	
5	Z31316	SUPPORT	1		X	
6	19M7139	CAP SCREW	3		X	M8X20
7	24M7036	WASHER	3		X	9,5MM
8	12M7008	LOCK WASHER	4		X	8MM
9	14M7029	NUT	4		X	M8
10	19M7163	CAP SCREW	1		X	M8X25
11	34M7031	SPRING PIN	2		X	5X24MM
12	21M7031	SCREW	2		X	M6X12
13	12M7012	LOCK WASHER	2		X	6MM
14	14M7027	NUT	2		X	M6

COPYRIGHT©1994 - 2008 DEERE & COMPANY Moline, Illinois All rights reserved

(4D10) UPPER FAN VARIATOR
VARIATEUR SUPERIEUR VENTILATEUR
OBERER GEBLAESE-VARIATOR
VARIATORE DEL VENTILATORE SUPERIORE
VARIADOR SUPERIOR DEL VENTILADOR
OVRE FLAKTVARIATOR

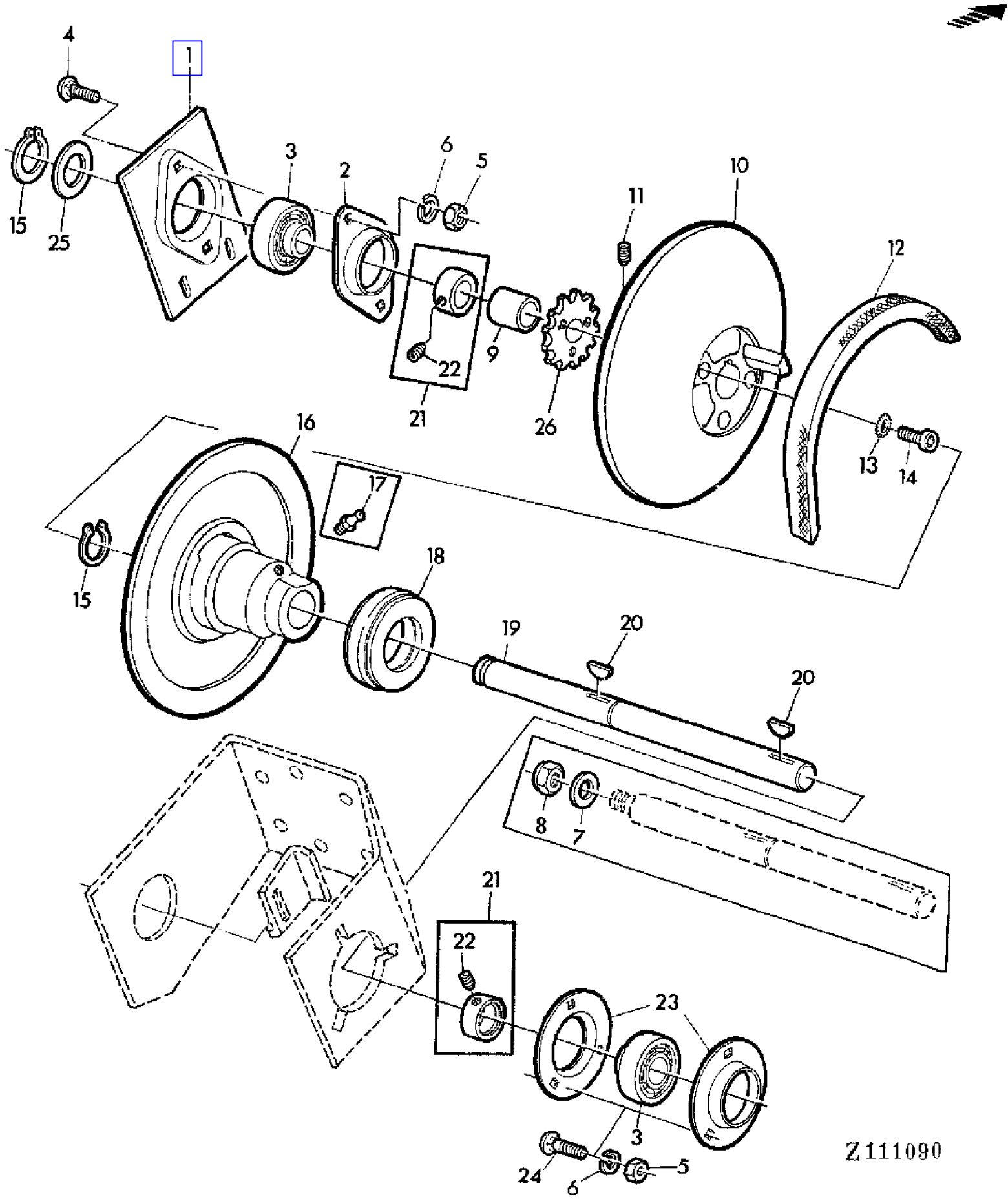

COPYRIGHT©1994 - 2008 DEERE & COMPANY Moline, Illinois All rights reserved

(4D10) UPPER FAN VARIATOR
VARIATEUR SUPERIEUR VENTILATEUR
OBERER GEBLAESE-VARIATOR
VARIATORE DEL VENTILATORE SUPERIORE
VARIADOR SUPERIOR DEL VENTILADOR
OVRE FLAKTVARIATOR

KEY	PART NO.	PART NAME	QTY	SERIAL NO.		955	REMARKS
1	Z30025	PLATE	1			X	
2	Z30026	QUILL	1			X	
3	JD39103	BALL BEARING	2			X	
4	03M7098	BOLT	2			X	M10X20
5	14M7140	NUT	5			X	M10
6	12M7013	LOCK WASHER	5			X	10MM
7	L18889	WASHER	1		- 017017	X	
8	14M7170	LOCK NUT	1		- 017017	X	M16
9	Z33739	SPACER	1		- 017017	X	
	Z33739	SPACER	1	011232	- 017017	X	
	Z38116	BUSHING	1	017018	-	X	
10	Z10676	HALF SHEAVE	1			X	
11	22M7000	SET SCREW	1			X	8X15MM
12	Z41178	BELT	1			X	(SUB FOR Z20459)
13	12M7072	LOCK WASHER	3			X	8MM
14	19M7555	SCREW	3			X	M8X30
15	40M1831	SNAP RING	2			X	30X1,5MM
16	Z10085	HALF SHEAVE	1		- 020516	X	(ORD JD39117, Z11214)
	Z11214	HALF SHEAVE	1	020517	-	X	(SUB FOR Z10085)
17	58M5573	LUBRICATION FITTING	1		- 020516	X	6X1MM
18	AM3983T	THRUST BEARING	1		- 020516	X	
	JD39117	THROW-OUT BEARING	1	020517	-	X	(SUB FOR AM3983T)
19	Z34653	SHAFT	1		- 017017	X	(ORD AZ10045, Z38087, Z38116)
	Z40190	SHAFT	1	017018	-	X	(ORD Z38087) (SUB FOR Z38087)
20	26M6731	SHAFT KEY	2			X	6X10MM
21	AZ10045	ECCENTRIC LOCKING COLLAR	2			X	ASSY, INCL KEY 22
22	AZ19844	SET SCREW	2			X	KIT
23	Z38395	PRESSED FLANGED HOUSING	2	011232	-	X	(SUB FOR P45502)
24	03M7017	BOLT	3	011232	-	X	M10X25
25	L19358	WASHER	2			X	
26	Z30028	CHAIN SPROCKET	1			X	Z = 16

COPYRIGHT©1994 - 2008 DEERE & COMPANY Moline, Illinois All rights reserved

(4E02) UPPER PART OF GRAIN ELEVATOR
ELEVATEUR DE GRAIN-PARTIE SUPERIEURE
KOERNERELEVATOR-OBERTEIL
PARTE SUPERIORE DEL ELEVATORE GRANO
PARTE SUPERIOR DEL ELEVADOR DE GRANO LIMPIO
OVRE DEL AV SADESELEVATOR

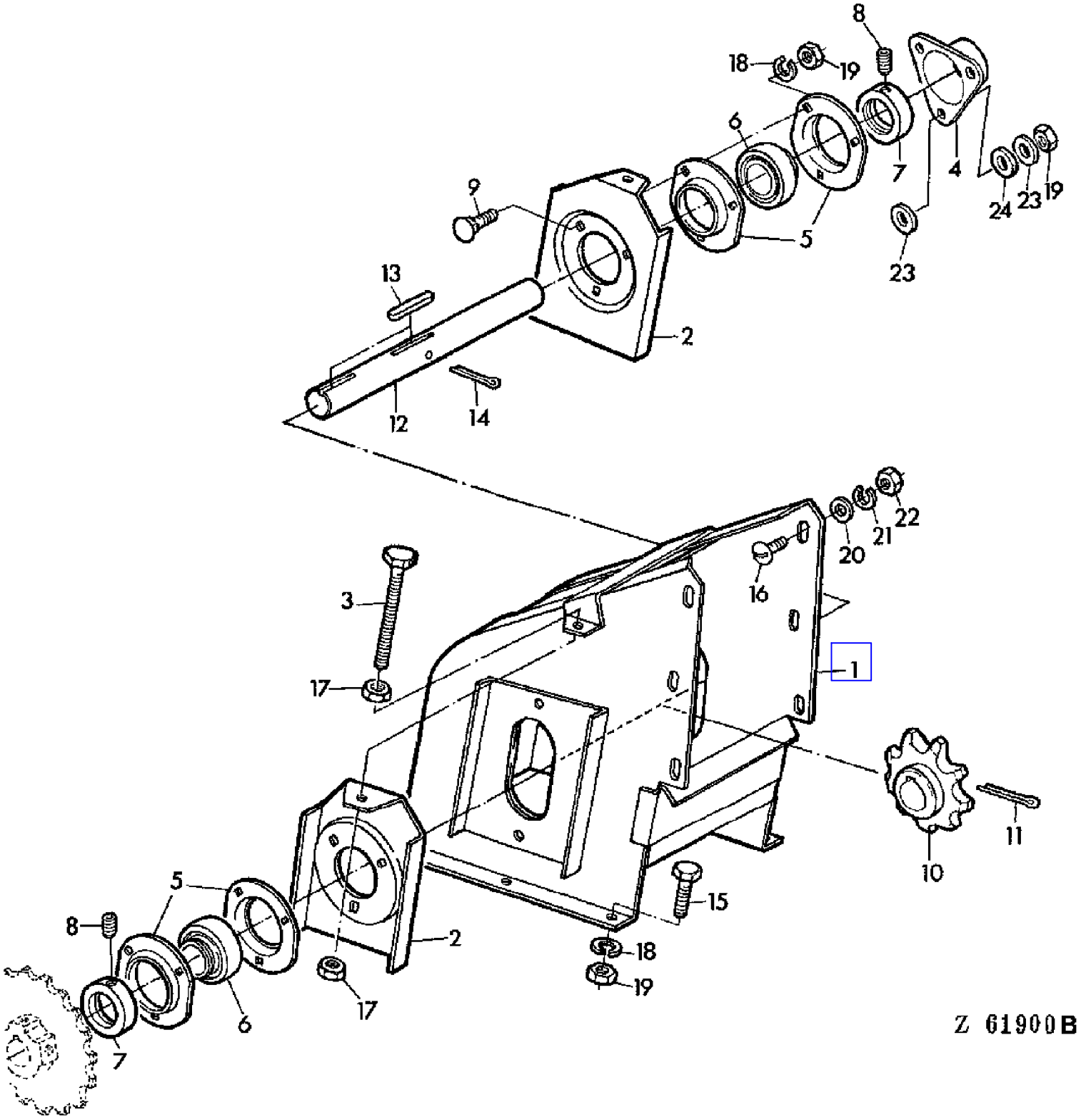

COPYRIGHT©1994 - 2008 DEERE & COMPANY Moline, Illinois All rights reserved

(4E02) UPPER PART OF GRAIN ELEVATOR
ELEVATEUR DE GRAIN-PARTIE SUPERIEURE
KOERNERELEVATOR-OBERTEIL
PARTE SUPERIORE DEL ELEVATORE GRANO
PARTE SUPERIOR DEL ELEVADOR DE GRANO LIMPIO
OVRE DEL AV SADESELEVATOR

KEY	PART NO.	PART NAME	QTY	SERIAL NO.	955	REMARKS
1	AZ10350	HOUSING	1		X	
2	Z20624	HOLDER	2		X	
3	19M7643	CAP SCREW	2		X	M8X75 (SUB FOR Z20620)
4	Z38381	GUARD	1		X	(SUB FOR Z24113, Z36139)
5	P47232	PRESSED FLANGED HOUSING	4		X	
6	JD39102	BALL BEARING	2		X	
7	AZ10044	ECCENTRIC LOCKING COLLAR	2		X	ASSY, INCL KEY 8
8	AZ19843	SET SCREW	2		X	KIT
9	03M7054	BOLT	6		X	M8X20
10	Z10997	CHAIN SPROCKET	1		X	Z = 8
11	11M7025	COTTER PIN	1		X	4X65MM
12	Z20696	SHAFT	1		X	
13	49M4108	SHAFT KEY	2		X	8X7X32MM
14	11M7029	COTTER PIN	1		X	5X40MM
15	19M7162	CAP SCREW	7		X	M8X15
16	21M7087	SCREW	6		X	M6X12
17	14M7166	LOCK NUT	2		X	M8
18	12M7008	LOCK WASHER	13		X	8MM
19	14M7029	NUT	16		X	M8
20	24M7088	WASHER	6		X	6,6MM
21	12M7012	LOCK WASHER	6		X	6MM
22	14M7027	NUT	6		X	M6
23	24M7036	WASHER	6		X	9MM
24	Z36140	WASHER	3		X	

COPYRIGHT©1994 - 2008 DEERE & COMPANY Moline, Illinois All rights reserved

(4E08) UPPER PART OF TAILINGS ELEVATOR
ELEVATEUR D'OTONS-PARTIE SUPERIEURE
UEBERKEHRELEVATOR OBERTEIL
PARTE SUPERIORE DELL'ELEVATORE RICUPERO
PARTE SUPERIOR DEL ELEVADOR DE RETRILLA
OEVRE DEL AV RETURELEVATOR

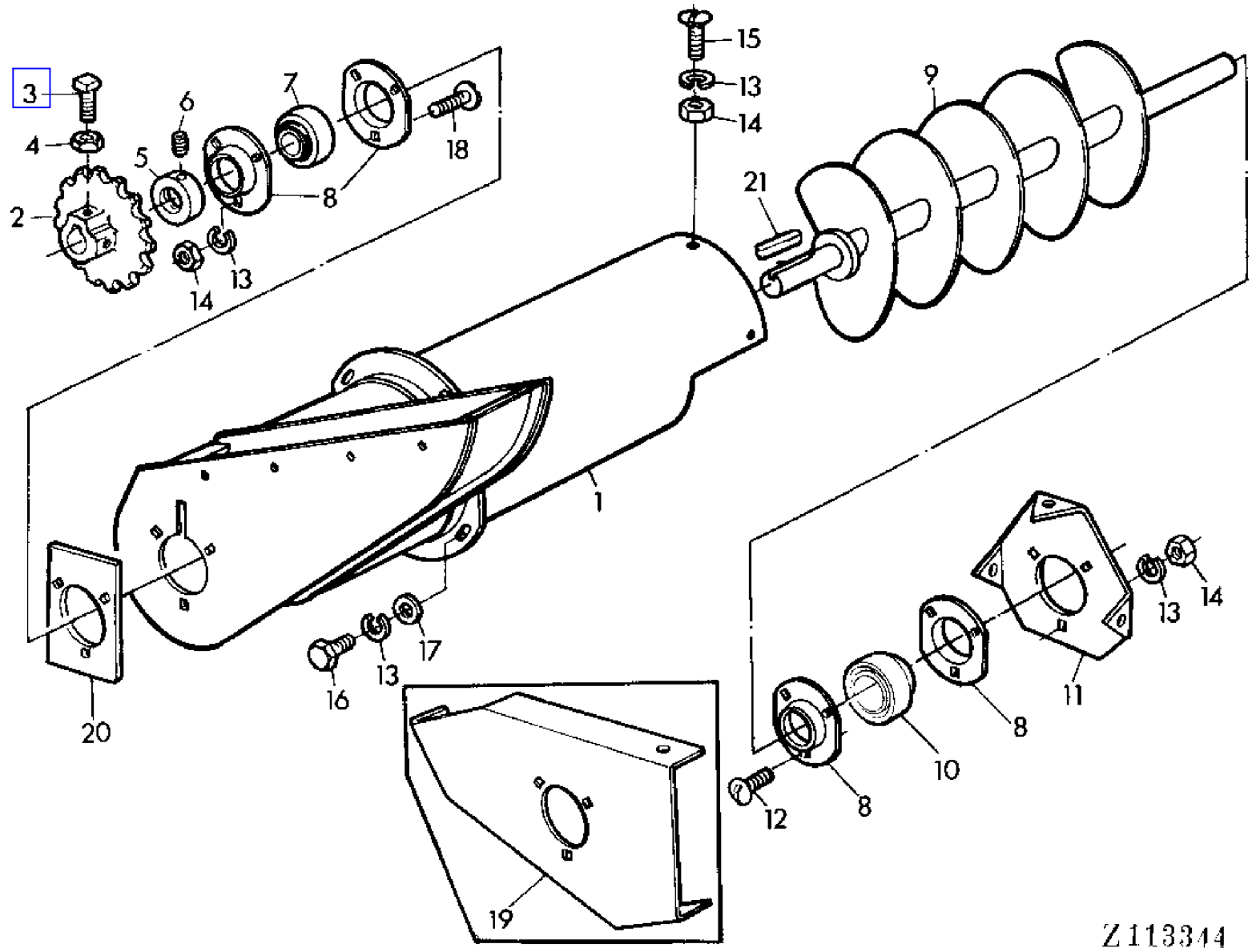

COPYRIGHT©1994 - 2008 DEERE & COMPANY Moline, Illinois All rights reserved

(4E08) UPPER PART OF TAILINGS ELEVATOR
ELEVATEUR D'OTONS-PARTIE SUPERIEURE
UEBERKEHRELEVATOR OBERTEIL
PARTE SUPERIORE DELL'ELEVATORE RICUPERO
PARTE SUPERIOR DEL ELEVADOR DE RETRILLA
OEVRE DEL AV RETURELEVATOR

KEY	PART NO.	PART NAME	QTY	SERIAL NO.	955	REMARKS
1	AZ23204	HOUSING	1	- 008651	X	
	AZ38304	HOUSING	1	008652 -	X	(SUB FOR AZ24921, AZ27707, AZ29687, AZ31452)
2	Z10117	CHAIN SPROCKET	1		X	Z = 16
3	Z26249	SET SCREW	2		X	10X22MM
4	14M7152	NUT	2		X	M10
5	AZ10044	ECCENTRIC LOCKING COLLAR	1		X	ASSY, INCL KEY 6
6	AZ19843	SET SCREW	1		X	KIT
7	JD39102	BALL BEARING	1		X	
8	P47232	PRESSED FLANGED HOUSING	4		X	
9	AZ38305	AUGER	1		X	(SUB FOR AZ22523, AZ23203, AZ33369)
10	AZ17305	BEARING	1		X	
11	Z47885	PRESSED FLANGED HOUSING	1		X	(SUB FOR Z27575)
12	03M7090	BOLT	3		X	M8X15
13	12M7008	LOCK WASHER	13		X	8MM
14	14M7029	NUT	9		X	M8
15	21M7081	SCREW	3		X	M8X15
16	19M3127	CAP SCREW	4		X	M8X15
17	24M7036	WASHER	4		X	9MM
18	03M7054	BOLT	3		X	M8X20
19	AZ16177	HOLDER	1	- 003200	X	
20	Z20198	HOLDER	1		X	
21	49M4111	SHAFT KEY	1		X	8X7X40MM

COPYRIGHT©1994 - 2008 DEERE & COMPANY Moline, Illinois All rights reserved

(1D08) VACUUM SENDING UNIT
CAPTEUR DE DEPRESSION
UNTERDRUCKGEBER
CONTATTO SEGNALAZIONE DI OSTRUZIONE DEL FILTRO ARIA
CAPTOR DE DEPRESION
VARNINGSKONTAKT FOR LUFTFILTER

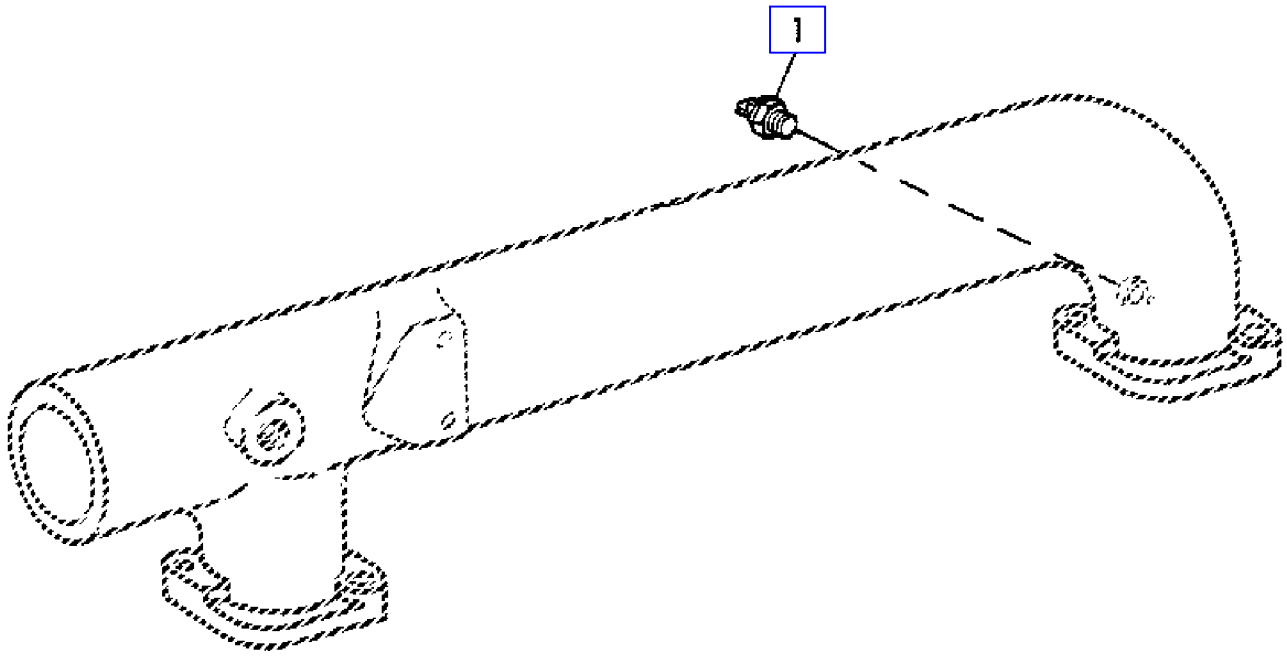

Z 105187

COPYRIGHT©1994 - 2008 DEERE & COMPANY Moline, Illinois All rights reserved

(1D08) VACUUM SENDING UNIT
CAPTEUR DE DEPRESSION
UNTERDRUCKGEBER
CONTATTO SEGNALAZIONE DI OSTRUZIONE DEL FILTRO ARIA
CAPTOR DE DEPRESION
VARNINGSKONTAKT FOR LUFTFILTER

KEY	PART NO.	PART NAME	QTY	SERIAL NO.	955	REMARKS
1	AL32975	TOUCH SWITCH	AR		X	(SUB FOR AL24194)

COPYRIGHT©1994 - 2008 DEERE & COMPANY Moline, Illinois All rights reserved

(4A21) VARIABLE CYLINDER SHEAVES(BELT-DRIVE)
VARIATEUR DU BATTEUR (ENTRAINEMENT COURROIE)
DRESCHTROMMEL-VARIATOR (KEILRIEMENANTRIEB)
VARIATORE DEL BATTITORE(COMANDO A CINGHIA)
VARIADOR DEL CILINDRO DESGRANADOR (ACCIONADO POR CORREA)
CYLINDERVARIATOR(REMDRIVNING)

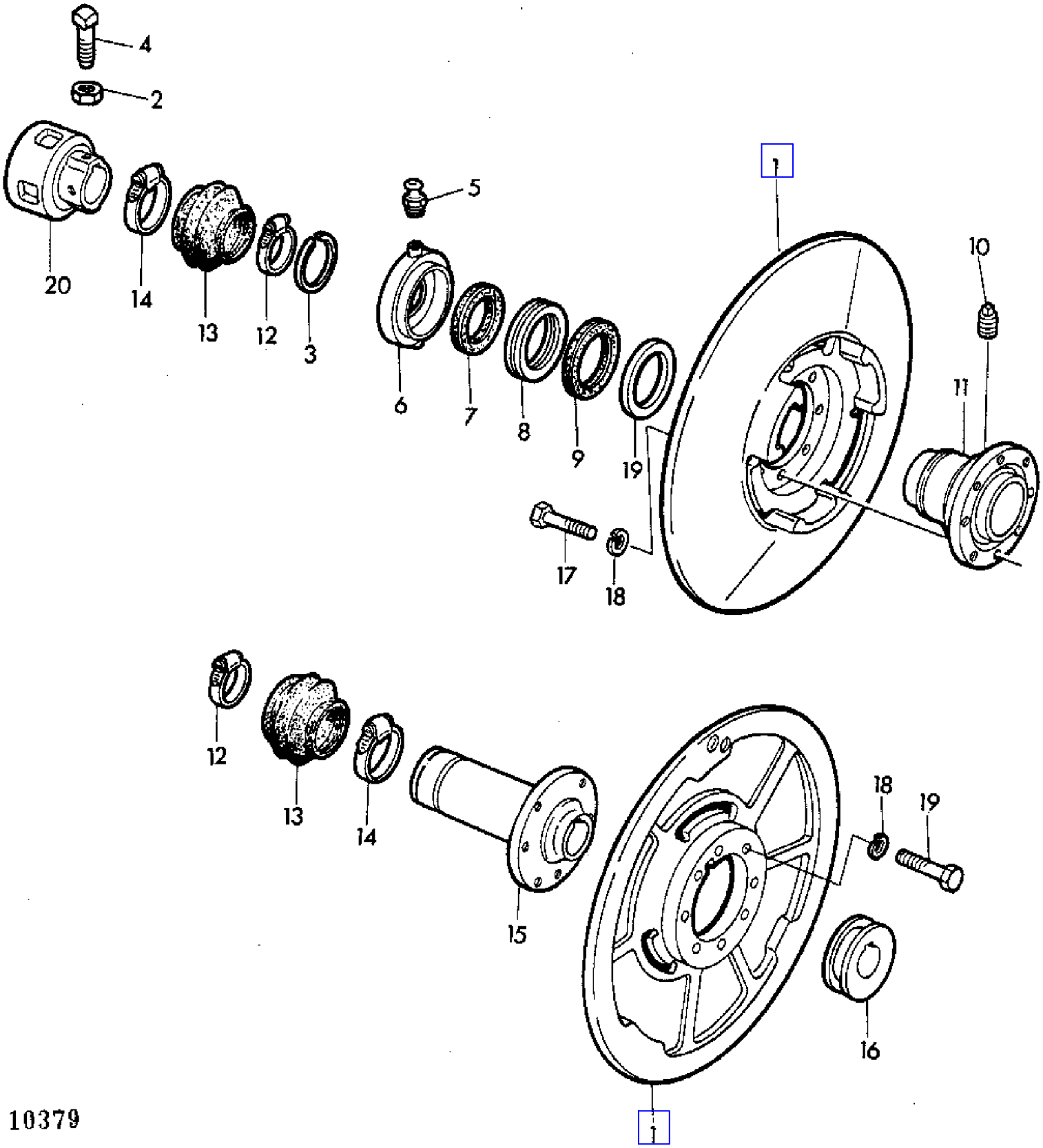

Z 10379

COPYRIGHT©1994 - 2008 DEERE & COMPANY Moline, Illinois All rights reserved

(4A21) VARIABLE CYLINDER SHEAVES(BELT-DRIVE)
VARIATEUR DU BATTEUR (ENTRAINEMENT COURROIE)
DRESCHTROMMEL-VARIATOR (KEILRIEMENANTRIEB)
VARIATORE DEL BATTITORE(COMANDO A CINGHIA)
VARIADOR DEL CILINDRO DESGRANADOR (ACCIONADO POR CORREA)
CYLINDERVARIATOR(REMDRIVNING)

KEY	PART NO.	PART NAME	QTY	SERIAL NO.	955	REMARKS
1	Z10577	HALF SHEAVE	2		X	
2	14M7031	NUT	2		X	M12
3	Z32314	SNAP RING	1		X	
4	Z32434	SET SCREW	2		X	12X30MM
5	58M7006	LUBRICATION FITTING	1		X	8X1MM
6	Z10128	RING	1		X	
7	Z22297	FELT	1		X	
8	JD33164	THRUST BEARING	1		X	
9	Z22296	FELT	1		X	
10	15M6412	DRAIN PLUG	1		X	12X1,5MM
11	Z10768	HUB	1		X	
12	Z32195	CLAMP	2		X	84MM
13	Z31034	BOOT	2		X	
14	Z32207	CLAMP	2		X	70MM
15	Z10747	HUB	1		X	
16	Z10766	PULLEY	1		X	
17	19M7167	CAP SCREW	16		X	M10X25
18	12M7013	LOCK WASHER	16		X	10MM
19	Z29189	WASHER	1		X	
20	Z10741	HUB	1		X	

COPYRIGHT©1994 - 2008 DEERE & COMPANY Moline, Illinois All rights reserved

(1G06) VARIABLE GROUND SPEED DRIVE
VARIATEUR DE DEPLACEMENT
FAHRVARIATOR
VARIATORE D'AVANZAMENTO
VARIADOR CONTINUO DE LA VELOCIDAD DE MARCHA
KORVARIATOR

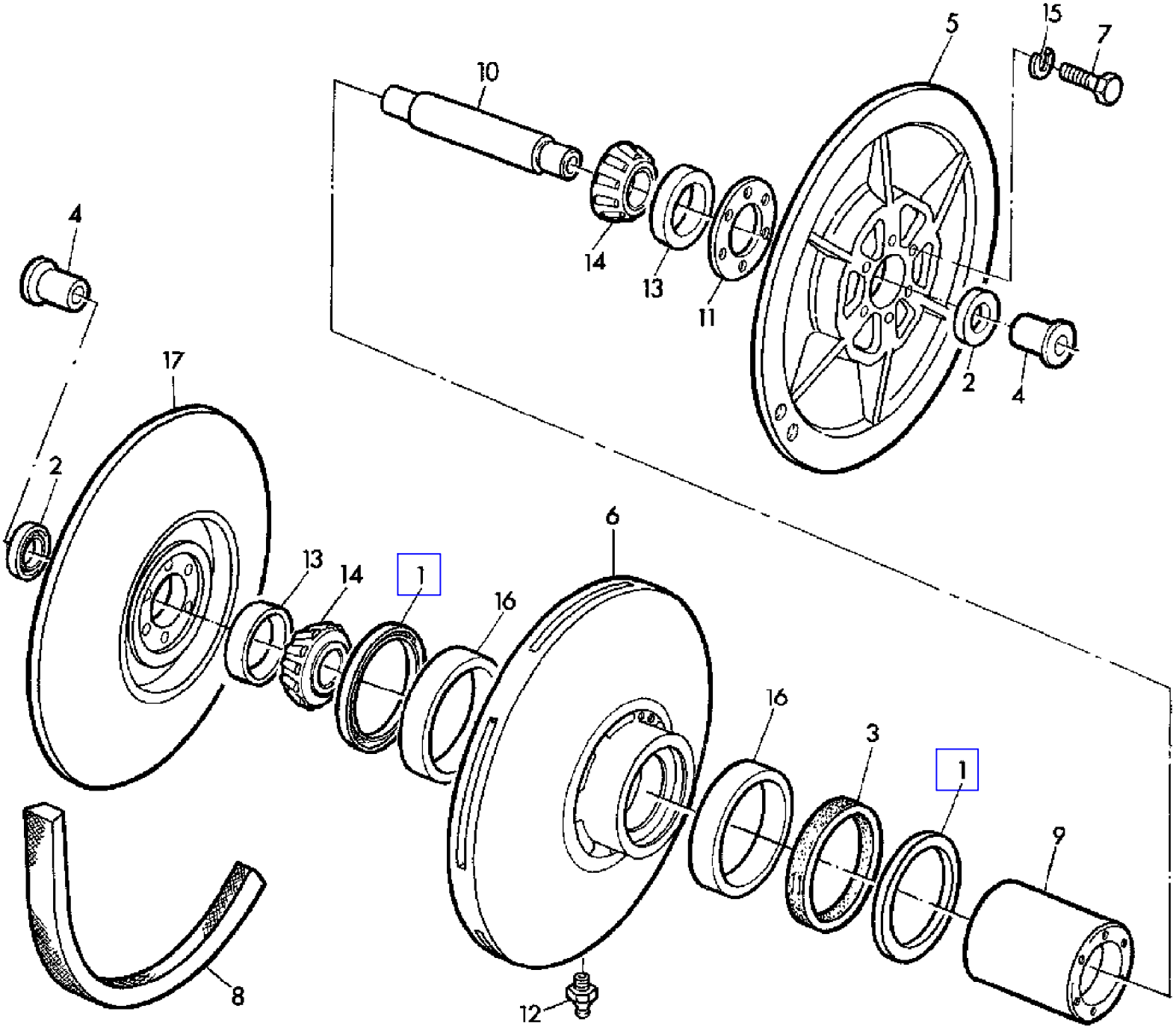

Z 101203

COPYRIGHT©1994 - 2008 DEERE & COMPANY Moline, Illinois All rights reserved

(1G06) VARIABLE GROUND SPEED DRIVE
VARIATEUR DE DEPLACEMENT
FAHRVARIATOR
VARIATORE D'AVANZAMENTO
VARIADOR CONTINUO DE LA VELOCIDAD DE MARCHA
KORVARIATOR

KEY	PART NO.	PART NAME	QTY	SERIAL NO.			955	REMARKS
1	AH12466	PACKING	2				X	
2	AZ17932	GASKET	2				X	
3	AH12467	FELT	1				X	
4	H23008	BUSHING	2		-	XXXX	X	
5	Z10646	HALF SHEAVE	1				X	
6	AH12465	CENTER SHEAVE	1				X	INCL KEYS 1,16
7	19H1732	CAP SCREW	16				X	3/8"X1-1/4"
8	Z34121	BELT	2		-	026952	X	LGTH = 3283 MM
	Z33967	BELT	2	026953	-		X	LGTH = 3492 MM
9	Z11035	HUB	1				X	
10	Z29193	SHAFT	1		-	030217	X	
	Z40444	SHAFT	1	030218	-		X	
11	Z29192	SHIM	AR				X	0,05MM
	Z29190	SHIM	AR				X	0,125MM
	Z29191	SHIM	AR				X	0,25MM
12	JD7759	LUBRICATION FITTING	1				X	
13	JD7424	BEARING CUP	2				X	
14	JD8100	BEARING CONE	2				X	
15	12H304	LOCK WASHER	AR				X	3/8"
16	H23005	BUSHING	2				X	
17	Z11460	HALF SHEAVE	1				X	(ORD Z12287)
	Z12287	HALF SHEAVE	1				X	(SUB FOR Z11460)

COPYRIGHT©1994 - 2008 DEERE & COMPANY Moline, Illinois All rights reserved

(2B25) VARIABLE GROUND SPEED DRIVE CYLINDER
VERIN DU VARIATEUR D'AVANCEMENT
FAHRVARIATORZYLINDER
CILINDRO VARIATORE D'AVANZAMENTO
CILINDRO DEL VARIADOR DE VELOCIDAD
KORVARIATORCYLINDER

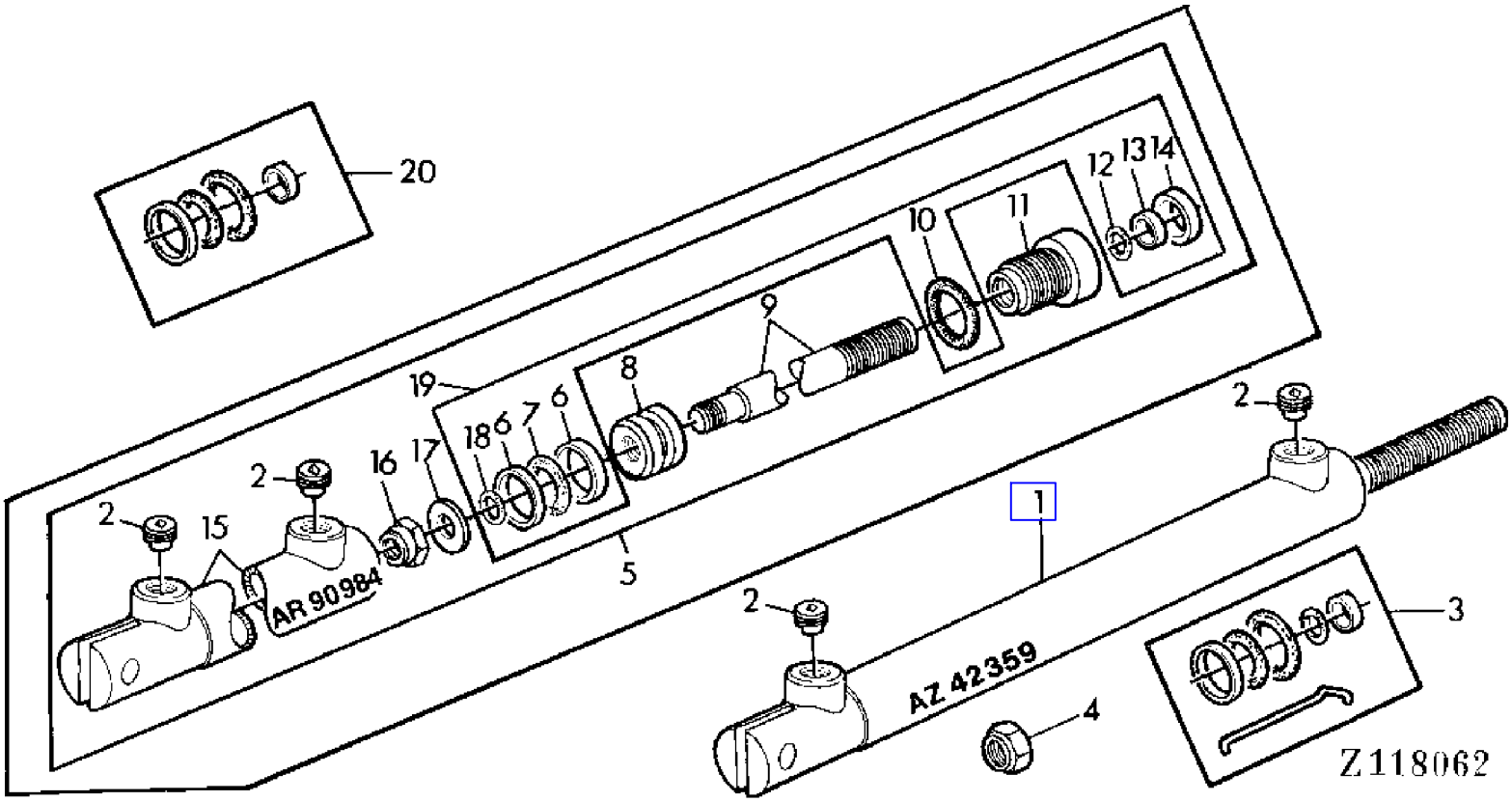

COPYRIGHT©1994 - 2008 DEERE & COMPANY Moline, Illinois All rights reserved

(2B25) VARIABLE GROUND SPEED DRIVE CYLINDER
VERIN DU VARIATEUR D'AVANCEMENT
FAHRVARIATORZYLINDER
CILINDRO VARIATORE D'AVANZAMENTO
CILINDRO DEL VARIADOR DE VELOCIDAD
KORVARIATORCYLINDER

KEY	PART NO.	PART NAME	QTY	CHASSIS SERIAL NO.		955	REMARKS
1	AZ37521	HYDRAULIC CYLINDER	1	021812	-	X	(ORD AZ42359) (SUB FOR AR90984)
	AZ42359	HYDRAULIC CYLINDER	1	021812	-	X	(SUB FOR AZ37521)
2	Z32156	ORIFICE	2	021812	-	X	ID = 0,8 MM (ORD Z42512)
	Z53327	APERTURE	2	021812	-	X	(FOR AZ42359)
	Z42512	APERTURE	2	037493	-	X	ID = 0,5 MM (FOR AZ37521)
3	AZ37816	SEAL KIT	1	021812	-	X	KIT (FOR AZ37521)
4	Z47520	LOCK NUT	1	021812	-	X	(FOR AZ37521)
5	AR90984	HYDRAULIC CYLINDER	1	021812	-	X	(ORD AZ37521)
6	.....	SCRAPER RING	2	021812	-	X	(ORD AZ37831)
7	.....	O-RING	1	021812	-	X	(ORD AZ37831)
8	.....	PISTON	1	021812	-	X	NSEP (ORD AZ37521)
9	.....	ROD	1	021812	-	X	NSEP (ORD AZ37521)
10	.....	O-RING	1	021812	-	X	(ORD AZ37831)
11	.....	SHOULDER FITTING	1	021812	-	X	NSEP (ORD AZ37521)
12	.....	O-RING	1	021812	-	X	(ORD AZ37831)
13	.....	SCRAPER RING	1	021812	-	X	(ORD AZ37831)
14	.....	BACK-UP RING	1	021812	-	X	(ORD AZ37831)
15	.....	HYDRAULIC CYLINDER BARREL	1	021812	-	X	NSEP (ORD AZ37521)
16	R69692	LOCK NUT	1	021812	-	X	
17	24M3739	WASHER	1	021812	-	X	8X16X2MM
18	.....	O-RING	1	021812	-	X	(ORD AZ37831)
19	AZ37831	GASKET KIT	1	021812	-	X	KIT (FOR AR90984)
20	AZ42360	SEAL KIT	1	021812	-	X	(FOR AZ42359)

COPYRIGHT©1994 - 2008 DEERE & COMPANY Moline, Illinois All rights reserved

(2C01) VARIABLE GROUND SPEED DRIVE CYLINDER
VERIN DU VARIATEUR D'AVANCEMENT
FAHRVARIATORZYLINDER
CILINDRO VARIATORE D'AVANZAMENTO
CILINDRO DEL VARIADOR DE VELOCIDAD
KORVARIATORCYLINDER

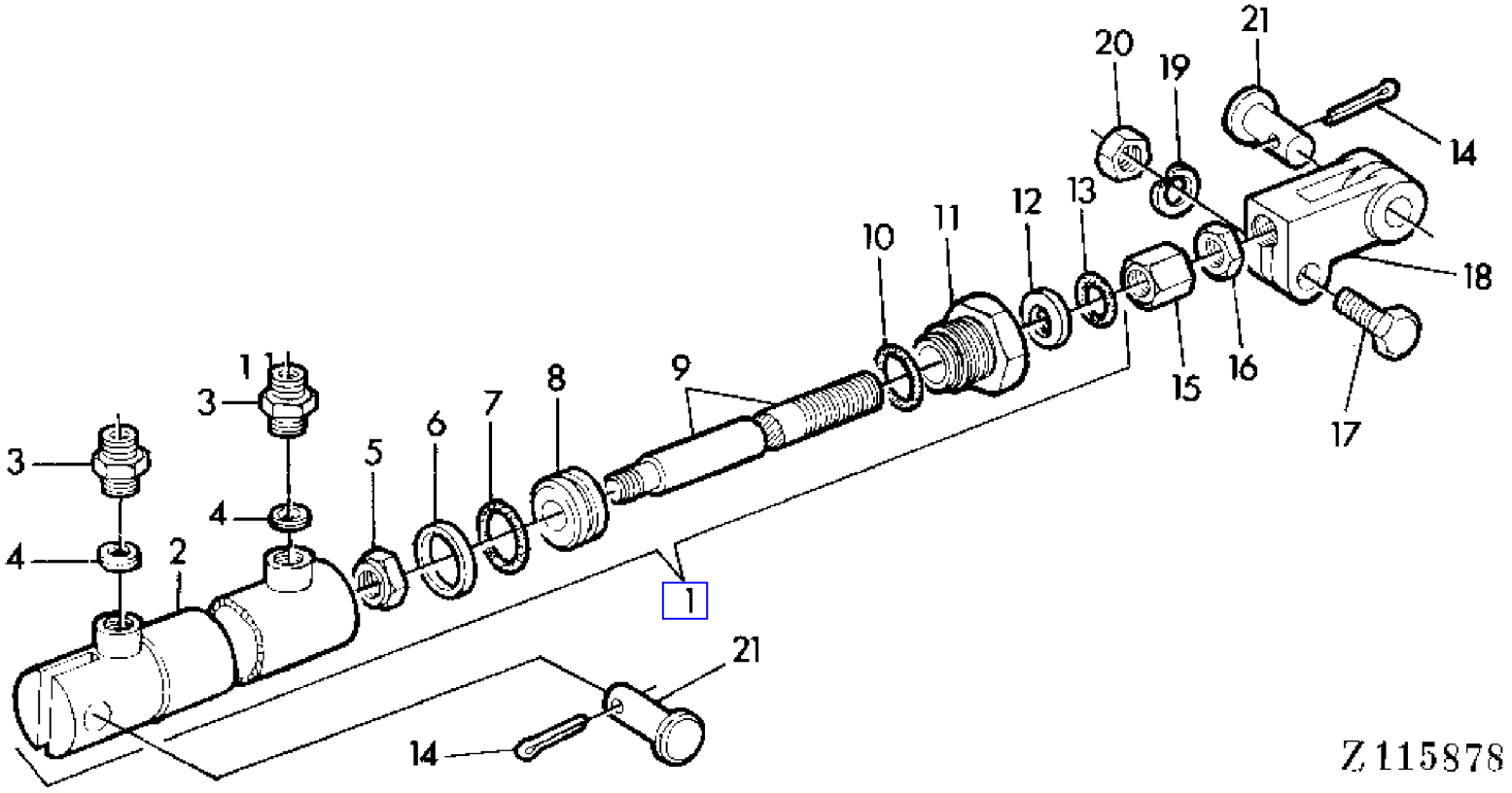

COPYRIGHT©1994 - 2008 DEERE & COMPANY Moline, Illinois All rights reserved

(2C01) VARIABLE GROUND SPEED DRIVE CYLINDER
VERIN DU VARIATEUR D'AVANCEMENT
FAHRVARIATORZYLINDER
CILINDRO VARIATORE D'AVANZAMENTO
CILINDRO DEL VARIADOR DE VELOCIDAD
KORVARIATORCYLINDER

KEY	PART NO.	PART NAME	QTY	CHASSIS SERIAL NO.	955	REMARKS
1	AZ23704	HYDRAULIC CYLINDER	1	- 021811	X	INCL KEYS 2-13 (ORD AZ37521)
2	.....	HYDRAULIC CYLINDER BARREL	1	- 021811	X	NSEP (ORD AZ37521)
3	Z32969	FITTING	2	- 021811	X	
4	Z32156	ORIFICE	2	- 021811	X	
5	Z27659	LOCK NUT	1	- 021811	X	
6	.....	BACK-UP RING	1	- 021811	X	(ORD AZ37816) (SUB FOR Z27657)
7	.....	O-RING	1	- 021811	X	(ORD AZ37816)
8	.....	PISTON	1	- 021811	X	NSEP (ORD AZ37521)
9	.....	ROD	1	- 021811	X	NSEP (ORD AZ37521)
10	.....	O-RING	1	- 021811	X	(ORD AZ37816)
11	.....	SHOULDER FITTING	1	- 021811	X	NSEP (ORD AZ37521)
12	.....	BACK-UP RING	1	- 021811	X	(ORD AZ37816)
13	.....	O-RING	1	- 021811	X	(ORD AZ37816)
14	11M7014	COTTER PIN	2		X	3X25MM
15	Z53238	NUT	1		X	(SUB FOR H33093, Z45433)
16	14H346	NUT	1		X	1/2"
17	19M7382	CAP SCREW	1		X	M10X40
18	H11219	YOKE	1		X	
19	12M7013	LOCK WASHER	1		X	10MM
20	14M7140	NUT	1		X	M10
21	P43548	PIN	2		X	
..	AZ37816	SEAL KIT	1		X	KIT, INCL KEYS 6,7,10,12,13 (FOR AZ23704)

COPYRIGHT©1994 - 2008 DEERE & COMPANY Moline, Illinois All rights reserved

(1B24) WATER PUMP
POMPE A EAU
WASSERPUMPE
POMPA DELL'ACQUA
BOMBA DE AGUA
VATTENPUMP

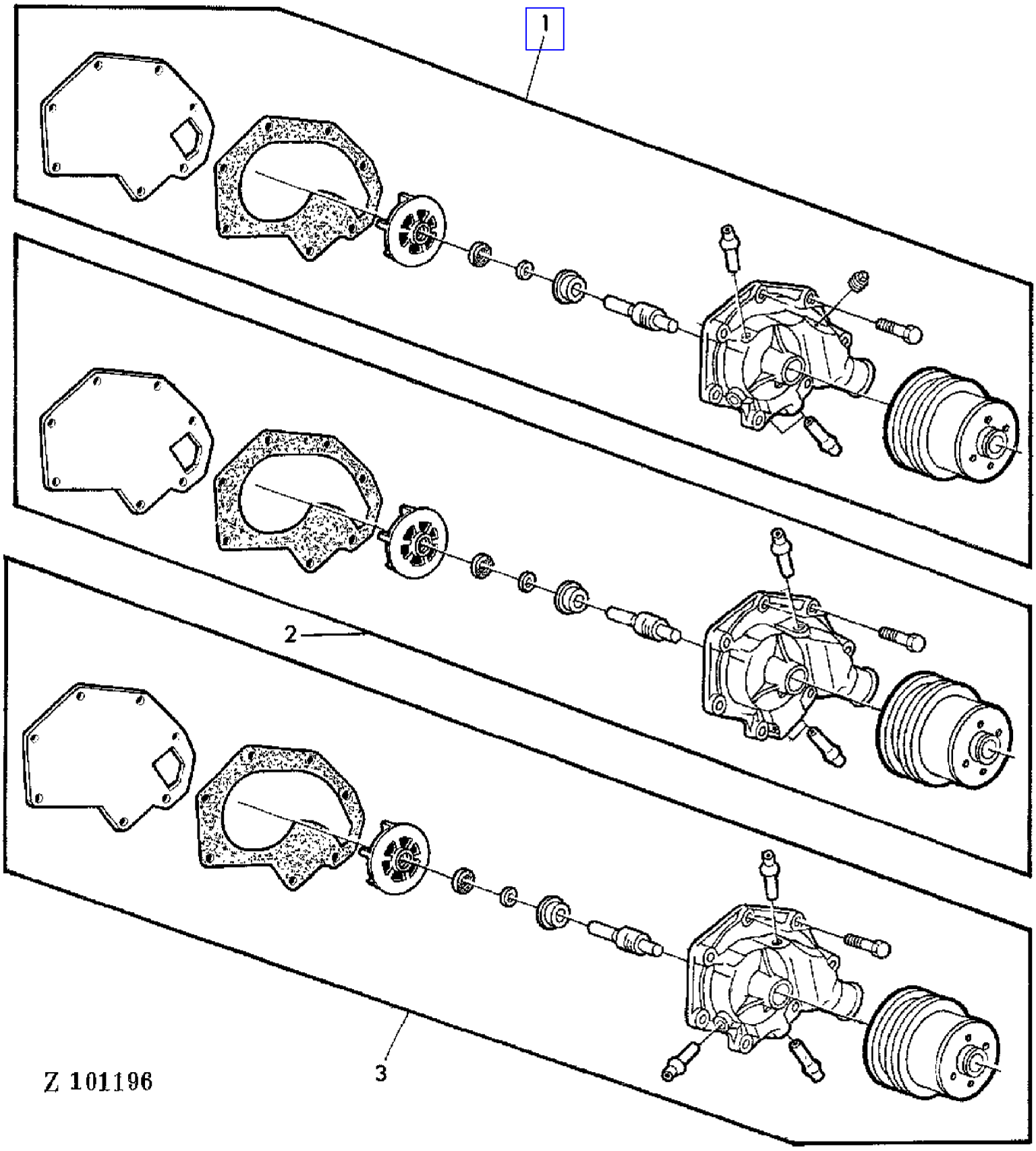

COPYRIGHT©1994 - 2008 DEERE & COMPANY Moline, Illinois All rights reserved

(PC4146) 955 Combine

(1B24) WATER PUMP
POMPE A EAU
WASSERPUMPE
POMPA DELL'ACQUA
BOMBA DE AGUA
VATTENPUMP

KEY	PART NO.	PART NAME	QTY	ENGINE SERIAL NO.			955	REMARKS
1	AR52396	WATER PUMP	1		-	235169	X	ASSY
2	AR76290	WATER PUMP	1	235170	-	498385	X	ASSY (ORD AR97710 W/ AR103053)
3	AR97710	WATER PUMP	1	498386	-		X	ASSY

COPYRIGHT©1994 - 2008 DEERE & COMPANY Moline, Illinois All rights reserved

(1B22) WATER PUMP AND FAN
POMPE A EAU ET VENTILATEUR
WASSERPUMPE UND LUEFTER
POMPA DELL'ACQUA E VENTILATORE
BOMBA DE AGUA Y VENTILADOR
VATTENPUMP OCH FLAKT

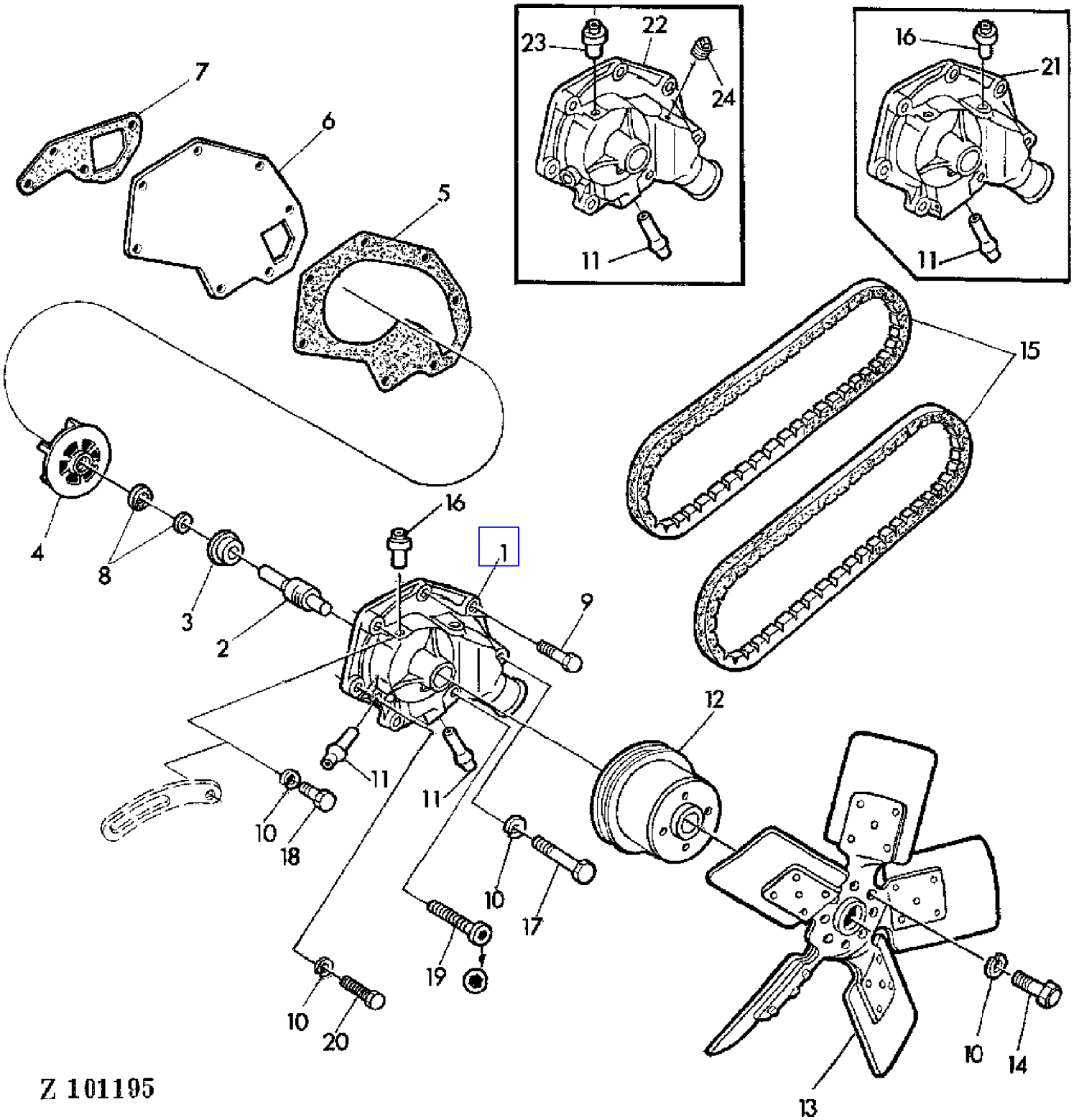

COPYRIGHT©1994 - 2008 DEERE & COMPANY Moline, Illinois All rights reserved

(1B22) WATER PUMP AND FAN
POMPE A EAU ET VENTILATEUR
WASSERPUMPE UND LUEFTER
POMPA DELL'ACQUA E VENTILATORE
BOMBA DE AGUA Y VENTILADOR
VATTENPUMP OCH FLAKT

KEY	PART NO.	PART NAME	QTY	ENGINE SERIAL NO.			955	REMARKS
1	R77012	HOUSING	1	498386	-		X	NSEP (ORD AR97710)
2	JD9257	BALL BEARING	1				X	NSEP (ORD RE11345)
3	T27261	SEAL	1				X	NSEP (ORD RE11345)
4	T30897	IMPELLER	1				X	NSEP (ORD RE11345)
5	T20271	GASKET	1				X	
6	T20270	COVER	1				X	
7	T20243	GASKET	1				X	
8	AR41691	INSERT	1				X	KIT, NSEP (ORD RE11345)
9	19H2545	CAP SCREW	2				X	3/8"X1-3/8"
10	12H304	LOCK WASHER	7				X	3/8"
11	R48993	TUBE	2				X	
12	T25213	PULLEY	1				X	
13	AR26382	FAN	1				X	
14	19H2284	CAP SCREW	4				X	3/8"X7/8"
15	AT28030	BELT SET	1				X	KIT (2)
16	R40083	HOSE FITTING	1	235170	-		X	
17	19H1912	CAP SCREW	2		-	498385	X	3/8"X3-1/2"
18	19H1819	CAP SCREW	1				X	3/8"X2-1/8"
19	19H3413	SCREW	1				X	3/8"X3-1/4" (SUB FOR 19H1912)
20	19H1801	CAP SCREW	1				X	3/8"X2"
21	R62154	HOUSING	1	235170	-	498385	X	NSEP (FOR AR76290) (ORD AR97710 W/ AR103053)
22	R65880	HOUSING	1		-	235169	X	NSEP (ORD AR52396)
23	R34985	LINE	1		-	235169	X	
24	15H584	PIPE PLUG	1		-	235169	X	1/2"
..	RE11345	KIT	AR				X	KIT, INCL KEYS 2-5,7,8

COPYRIGHT©1994 - 2008 DEERE & COMPANY Moline, Illinois All rights reserved

(1C20) WATER TRAP
DECANTEUR
WASSERABSCHEIDER
POZZETTO DELLA CONDENSA
SEPARADOR DE AGUA
VATTENAVSKILJARE

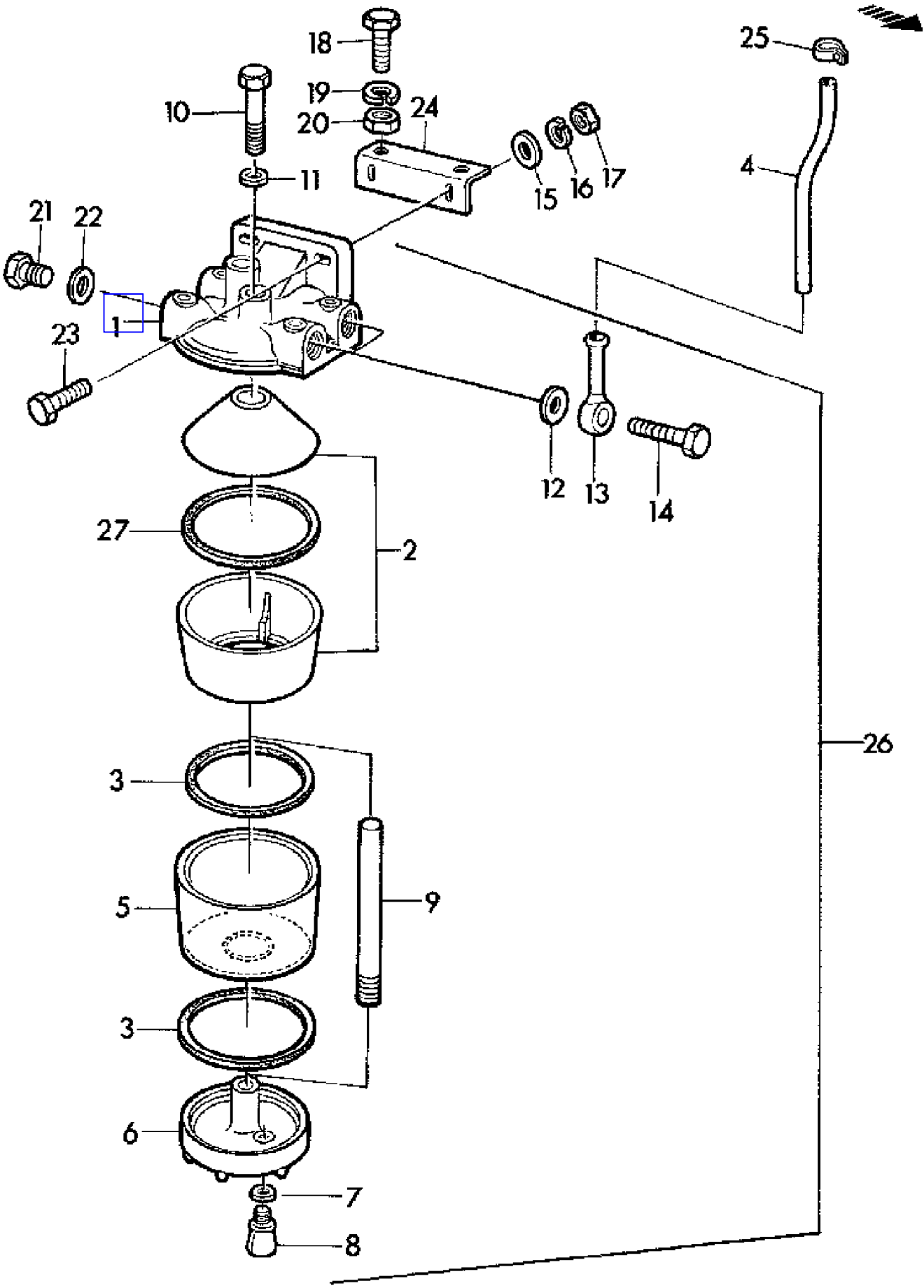

Z 32969

COPYRIGHT©1994 - 2008 DEERE & COMPANY Moline, Illinois All rights reserved

(1C20) WATER TRAP
DECANTEUR
WASSERABSCHEIDER
POZZETTO DELLA CONDENSA
SEPARADOR DE AGUA
VATTENAVSKILJARE

KEY	PART NO.	PART NAME	QTY	SERIAL NO.		955	REMARKS
1	CD13179	COVER	1			X	
2	DD11751	KIT	1			X	
3	T19114	GASKET	2			X	
4	Z28649	HOSE	1		- XXXX	X	
5	CD13185	SEDIMENT BOWL	1			X	
6	CD13186	BOTTOM	1			X	
7	CD13191	WASHER	1			X	
8	CD13190	DRAIN PLUG	1			X	
9	CD13187	STUD	1			X	
10	CD13188	CAP SCREW	1			X	
11	CD13189	WASHER	1			X	
12	T24608	WASHER	2			X	
13	Z30535	FITTING	2	XXXX	-	X	
	Z34673	FITTING	2	XXXX	-	X	
14	CD13182	HOLLOW SCREW	2			X	
15	24M7036	WASHER	2			X	9MM
16	12M7008	LOCK WASHER	2			X	8MM
17	14M7029	NUT	2			X	M8
18	19M7167	CAP SCREW	2			X	M10X25
19	12M7013	LOCK WASHER	2			X	10MM
20	14M7140	NUT	2			X	M10
21	CD13180	FITTING PLUG	2			X	
22	CD13181	WASHER	2			X	
23	19M7376	CAP SCREW	2			X	M8X25
24	Z28648	HOLDER	1			X	
25	Z21240	CLAMP	AR		- XXXX	X	
	Z22560	CLAMP	2	XXXX	-	X	AR
26	DD11218	WATER TRAP	1			X	ASSY, INCL KEYS 1-3,5-14,22 (SUB FOR AZ17279)
27	R75867	GASKET	1			X	

COPYRIGHT©1994 - 2008 DEERE & COMPANY Moline, Illinois All rights reserved

(1H23) WIDE REAR AXLE AND V-SUPPORT
ESSIEV ARRIERE LARGE ET SUPPORT EN V
BREITE HINTERACHSE UND V-VERSTREBUNG
ASSALE POSTERIORE LARGO CON TRAVERSA DI V
EJE TRASERO ANCHO CON RIOSTRA EN V
BRED BAKAXEL MED V-FORSTAGNING

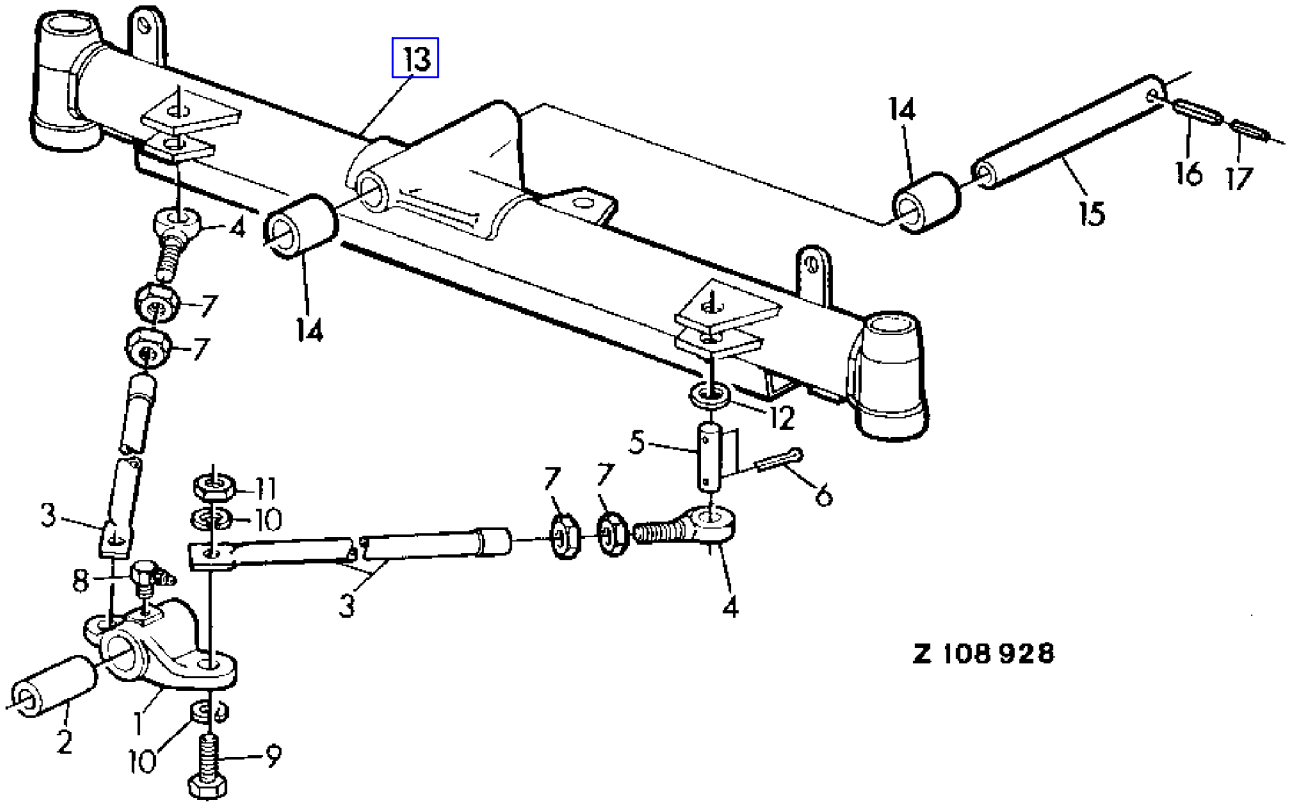

COPYRIGHT©1994 - 2008 DEERE & COMPANY Moline, Illinois All rights reserved

(1H23) WIDE REAR AXLE AND V-SUPPORT
ESSIEV ARRIERE LARGE ET SUPPORT EN V
BREITE HINTERACHSE UND V-VERSTREBUNG
ASSALE POSTERIORE LARGO CON TRAVERSA DI V
EJE TRASERO ANCHO CON RIOSTRA EN V
BRED BAKAXEL MED V-FORSTAGNING

KEY	PART NO.	PART NAME	QTY	SERIAL NO.			955	REMARKS
1	Z10793	BEARING	1				X	
2	Z31724	BUSHING	1				X	
3	AZ20375	BRACE	2				X	
4	21M7328	EYEBOLT	2				X	M24X120
5	44M7046	PIN	2				X	22H9X75X59MM (SUB FOR 45M7025)
6	11M7029	COTTER PIN	4				X	5X40MM
7	14M7212	NUT	4				X	M24
8	58M7008	LUBRICATION FITTING	1				X	M8X1
9	19M7487	CAP SCREW	2				X	M20X50
10	12M7039	LOCK WASHER	4				X	20MM
11	14M7144	NUT	2				X	M20
12	24M7090	WASHER	2				X	22MM
13	AZ27906	REAR AXLE	1		-	023197	X	(SUB FOR AZ23115)
	AZ39157	REAR AXLE	1	023198	-		X	(SUB FOR AZ28785, AZ28786)
14	Z21575	BUSHING	2				X	
15	Z21596	KINGPIN	1				X	
16	34M7048	SPRING PIN	1				X	8X45MM
17	34M7036	SPRING PIN	1				X	5X45MM

COPYRIGHT©1994 - 2008 DEERE & COMPANY Moline, Illinois All rights reserved

(3B24) WINDSHIELD WIPER
ESSUIE-GLACES
SCHEIBENWISCHER
TERGICRISTALLO
LIMPIAPARABRISAS
VINDRUTETORKARE

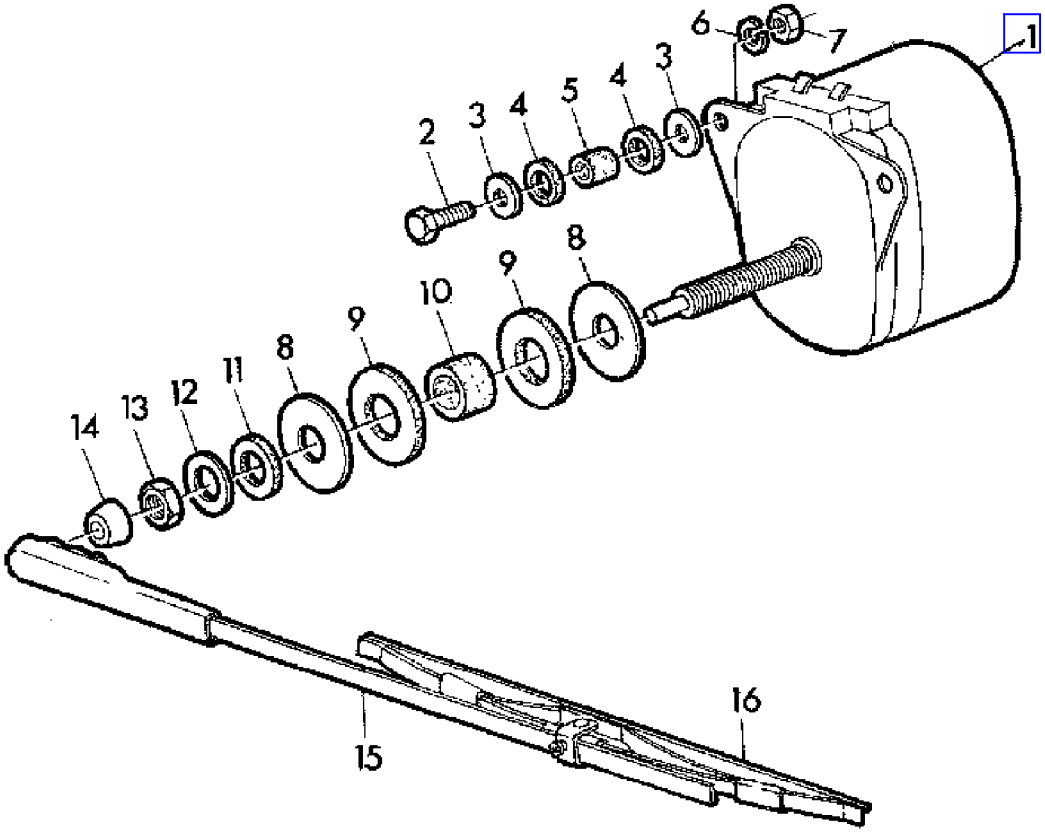

Z 101089

COPYRIGHT©1994 - 2008 DEERE & COMPANY Moline, Illinois All rights reserved

(3B24) WINDSHIELD WIPER
ESSUIE-GLACES
SCHEIBENWISCHER
TERGICRISTALLO
LIMPIAPARABRISAS
VINDRUTETORKARE

KEY	PART NO.	PART NAME	QTY	SERIAL NO.	955	REMARKS
1	DA19493	MOTOR	2		X	INCL KEYS 11-14
2	19M7298	CAP SCREW	4		X	M8X35
3	CA19721	WASHER	8		X	
4	CA19589	SEAL	8		X	
5	CA19590	BUSHING	4		X	
6	12M7008	LOCK WASHER	4		X	8MM
7	14M7029	NUT	4		X	M8
8	CA19586	WASHER	4		X	
9	CA19587	SEAL	4		X	
10	CA19588	BUSHING	2		X	
11	CA19827	WASHER	2		X	
12	CA19828	DEFLECTOR	2		X	
13	CA19829	NUT	2		X	
14	CA19830	GUARD	2		X	
15	DA19489	ARM	1		X	UP
	DA19494	ARM	1		X	LOW
16	CA16485	WINDSHIELD WIPER	1		X	UP
	CA19495	WIPER BLADE	1		X	LOW

COPYRIGHT©1994 - 2008 DEERE & COMPANY Moline, Illinois All rights reserved

(1F06) WIRING HARNESS(DASH-DISCONNECT PLUG)
FAISCEAU(JONCTION TABLEAU DE BORD)
KABELBAUM (ARMATURENKASTEN-TRENNSTELLE)
CABLAGGIO DEL CRUSCOTTO
HAZ DE CABLES PARA ALIMENTAR LOS INSTRUMENTOS
KABELHARVA AV INSTRUMENTPANEL

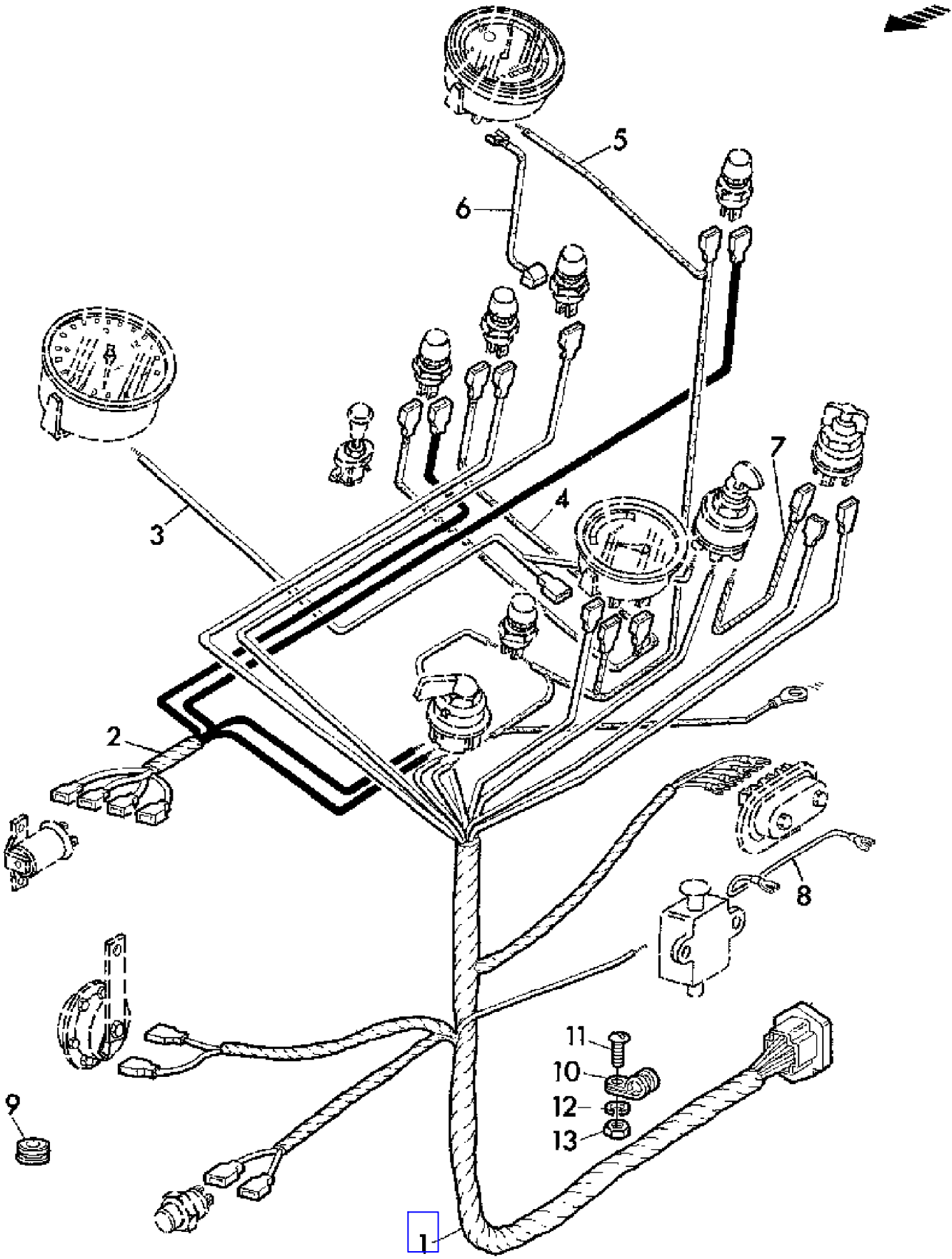

Z 101062

COPYRIGHT©1994 - 2008 DEERE & COMPANY Moline, Illinois All rights reserved

(1F06) WIRING HARNESS(DASH-DISCONNECT PLUG)
FAISCEAU(JONCTION TABLEAU DE BORD)
KABELBAUM (ARMATURENKASTEN-TRENNSTELLE)
CABLAGGIO DEL CRUSCOTTO
HAZ DE CABLES PARA ALIMENTAR LOS INSTRUMENTOS
KABELHARVA AV INSTRUMENTPANEL

KEY	PART NO.	PART NAME	QTY	SERIAL NO.			955	REMARKS
1	AZ23617	WIRING HARNESS	1		-	015897	X	ASSY
	AZ25912	WIRING HARNESS	1	015898	-		X	
2	AZ23614	WIRING HARNESS	1				X	
3	AZ23651	CABLE	1				X	
4	AZ23613	CABLE	1				X	
5	AZ23612	WIRING HARNESS	1				X	
6	AZ23580	WIRING LEAD	1				X	
7	AZ23578	WIRING LEAD	1				X	
8	AZ24216	WIRING LEAD	1				X	
9	Z34506	GROMMET	AR				X	
10	Z22071	CLAMP	AR				X	
11	21M7031	SCREW	AR				X	M6X15
12	12M7012	LOCK WASHER	AR				X	6MM
13	14M7027	NUT	AR				X	M6

COPYRIGHT©1994 - 2008 DEERE & COMPANY Moline, Illinois All rights reserved

(1F08) WIRING HARNESS(DISCONNECT PLUG-ENGINE-TAIL LIGHTS)
FAISCEAU(JONCTION MOTEUR-FEUX ARRIERE)
KABELBAUM (TRENNSTELLE-MOTOR-SCHLUSSLICHT)
CABLAGGIO(MOTORE-LUCI DI CODA)
HAZ DE CABLES DEL ENCHUFE EN EL MOTOR A LOS PILOTOS TRASEROS
KABELHARVA(MOTOR-BAKLJUS)

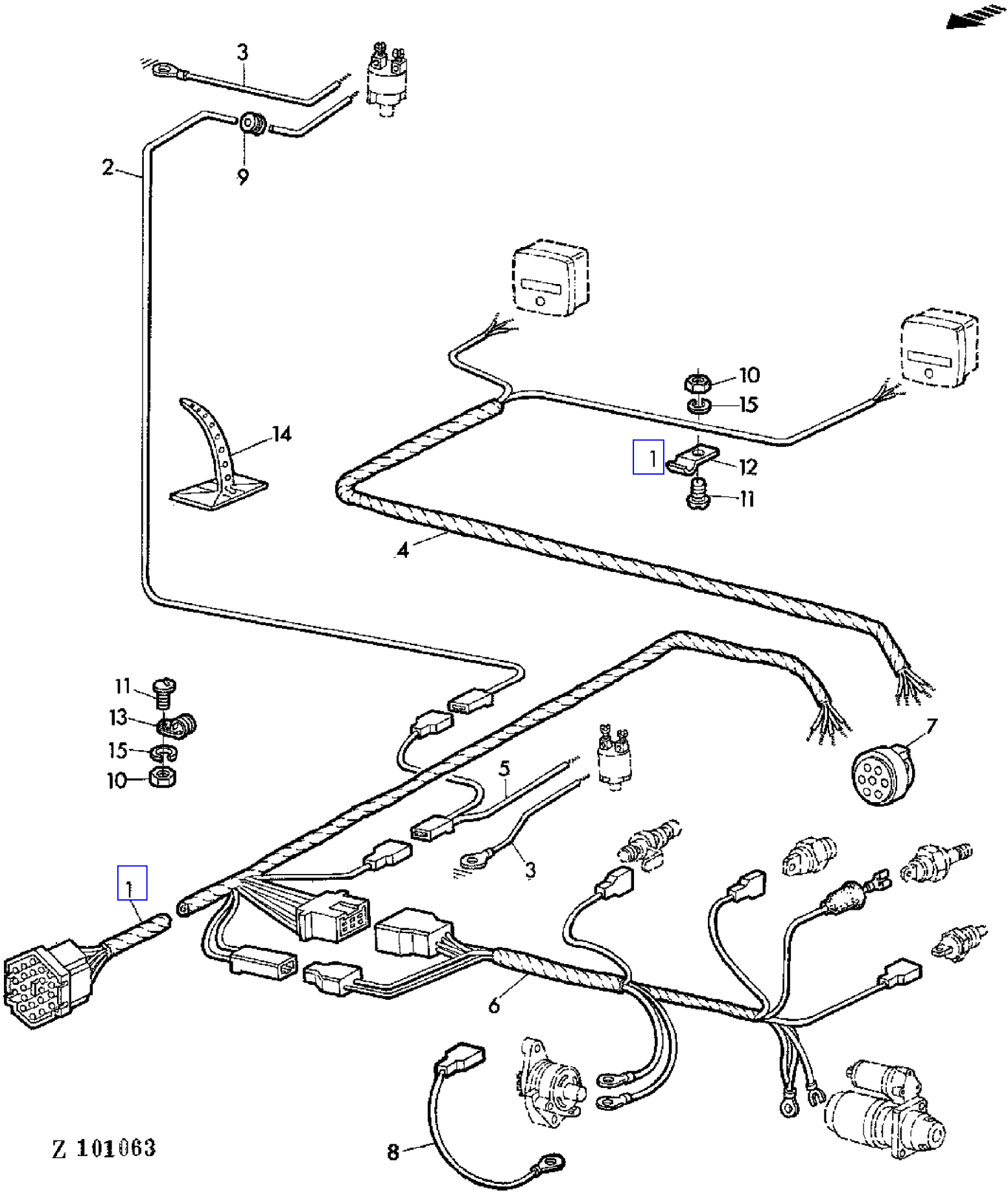

COPYRIGHT©1994 - 2008 DEERE & COMPANY Moline, Illinois All rights reserved

(1F08) WIRING HARNESS(DISCONNECT PLUG-ENGINE-TAIL LIGHTS)
FAISCEAU(JONCTION MOTEUR-FEUX ARRIERE)
KABELBAUM (TRENNSTELLE-MOTOR-SCHLUSSLICHT)
CABLAGGIO(MOTORE-LUCI DI CODA)
HAZ DE CABLES DEL ENCHUFE EN EL MOTOR A LOS PILOTOS TRASEROS
KABELHARVA(MOTOR-BAKLJUS)

KEY	PART NO.	PART NAME	QTY	SERIAL NO.			955	REMARKS
1	AZ23610	WIRING HARNESS	1		-	015897	X	ASSY
	AZ25907	WIRING HARNESS	1	015898	-		X	
2	AZ23563	CABLE	1				X	
3	AZ23576	CABLE	2				X	
4	AZ23569	WIRING HARNESS	1				X	
5	AZ24253	CABLE	1				X	
6	AZ23611	WIRING HARNESS	1		-	024597	X	
	AZ28725	WIRING HARNESS	1	024598	-	XXXX	X	
	AZ23611	WIRING HARNESS	1	XXXX	-		X	
7	AZ13378	SOCKET OUTLET	1				X	
8	AZ28724	POWER CORD	1	024598	-		X	
9	Z21238	GROMMET	AR				X	AR
10	14M7027	NUT	AR				X	M6
11	21M7031	SCREW	AR				X	M6X15
12	Z22588	CLAMP	AR				X	
13	Z22067	CLAMP	AR				X	
14	Z36647	CLAMP	AR				X	
15	12M7012	LOCK WASHER	AR				X	6MM

COPYRIGHT©1994 - 2008 DEERE & COMPANY Moline, Illinois All rights reserved

(1F10) WIRING HARNESS(FUSE BOX-HEADLIGHTS)
FAISCEAU(BOITIER DES FUSIBLES-PHARES)
KABELBAUM (SICHERUNGSKASTEN-SCHEINWERFER)
CABLAGGIO(SCATOLA FUSIBILI-FARI)
HAZ DE CABLES(CAJA DE FUSIBLES-FAROS)
KABELHARVA (SAKRINGSHALLARE-STRALKASTARE

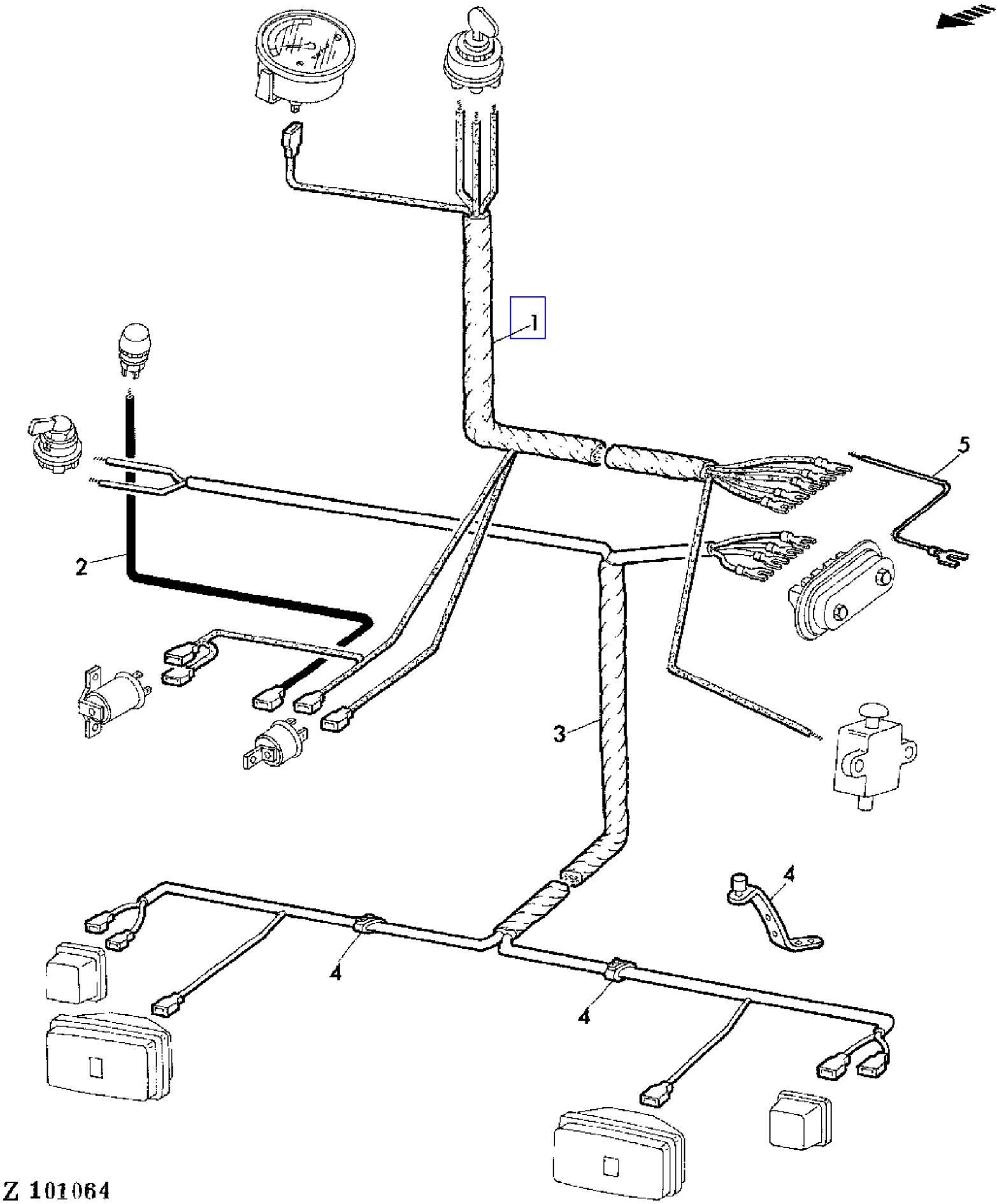

COPYRIGHT©1994 - 2008 DEERE & COMPANY Moline, Illinois All rights reserved

(1F10) WIRING HARNESS(FUSE BOX-HEADLIGHTS)
FAISCEAU(BOITIER DES FUSIBLES-PHARES)
KABELBAUM (SICHERUNGSKASTEN-SCHEINWERFER)
CABLAGGIO(SCATOLA FUSIBILI-FARI)
HAZ DE CABLES(CAJA DE FUSIBLES-FAROS)
KABELHARVA (SAKRINGSHALLARE-STRALKASTARE

KEY	PART NO.	PART NAME	QTY	SERIAL NO.	955	REMARKS
1	AZ23615	WIRING HARNESS	1		X	
2	Z30226	WIRING LEAD	1		X	
3	AZ26183	WIRING HARNESS	1		X	(SUB FOR AZ23584)
4	Z31020	CLAMP	AR		X	
5	AZ31927	POWER CORD	1		X	

COPYRIGHT©1994 - 2008 DEERE & COMPANY Moline, Illinois All rights reserved

(1F20) WORK LIGHT
PROJECTEUR DE TRAVAIL
ARBEITSSCHEINWERFER
LUCE DI LAVORO
FARO AUXILIAR
ARBETSLJUS

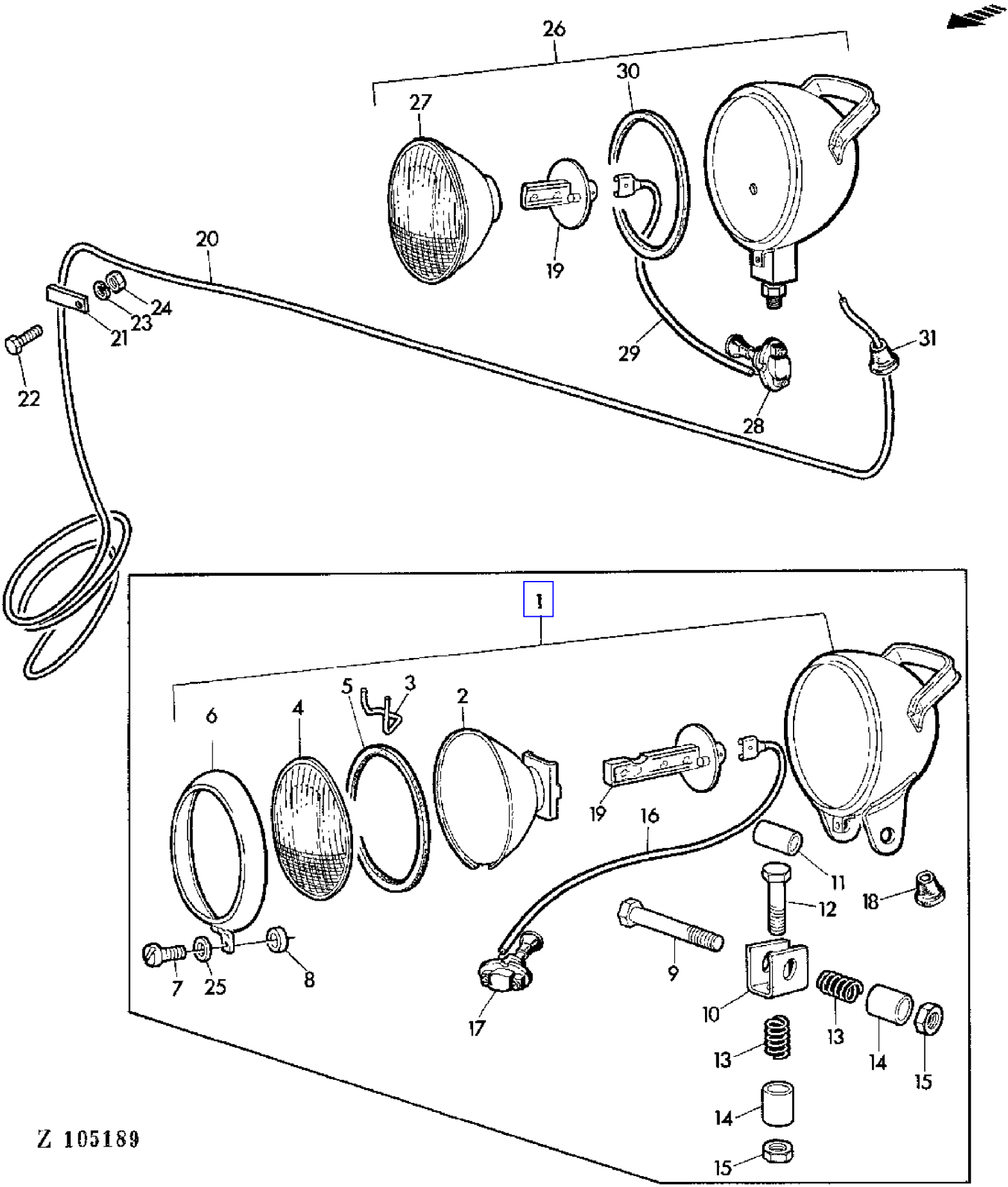

COPYRIGHT©1994 - 2008 DEERE & COMPANY Moline, Illinois All rights reserved

(PC4146) 955 Combine

(1F20) WORK LIGHT
PROJECTEUR DE TRAVAIL
ARBEITSSCHEINWERFER
LUCE DI LAVORO
FARO AUXILIAR
ARBETSLJUS

KEY	PART NO.	PART NAME	QTY	SERIAL NO.			955	REMARKS
1	AZ15671	FLOODLAMP	1		-	015897	X	ASSY, INCL KEYS 2-18
2	AZ16166	REFLECTOR	1		-	015897	X	
3	Z27383	SPRING	4		-	015897	X	
4	Z27381	LENS	1		-	015897	X	
5	Z27382	GASKET	1		-	015897	X	
6	AZ16165	BEZEL	1		-	015897	X	
7	L13558	SCREW	1		-	015897	X	5X12MM
8	L13560	WASHER	1		-	015897	X	
9	19M7328	CAP SCREW	1		-	015897	X	M10X70
10	.....	CHANNEL	1		-	015897	X	NSEP
11	.....	BUSHING	1		-	015897	X	NSEP
12	19M7183	CAP SCREW	1		-	015897	X	M10X40
13	.....	SPRING	2		-	015897	X	NSEP
14	.....	BUSHING	2		-	015897	X	NSEP
15	14M7167	LOCK NUT	2		-	015897	X	M10
16	Z21990	WIRING LEAD	1		-	015897	X	
17	AZ16167	SWITCH	1		-	015897	X	
18	Z27384	GROMMET	1		-	015897	X	
19	Z26998	BULB	1				X	
20	AZ12750	WIRING LEAD	1				X	
21	Z23521	CLAMP	3				X	
22	19M7159	CAP SCREW	3				X	M6X15
23	12M7012	LOCK WASHER	3				X	6MM
24	14M7027	NUT	3				X	M6
25	L13559	WASHER	1				X	
26	AL29611	FLOODLAMP	1	015898	-		X	
27	AL29614	LAMP	1	015898	-		X	
28	AL29615	SWITCH	1	015898	-		X	
29	AT24696	CABLE	1	015898	-		X	
30	L33463	BEZEL	1	015898	-		X	
31	Z37882	GROMMET	1	015898	-		X	

COPYRIGHT©1994 - 2008 DEERE & COMPANY Moline, Illinois All rights reserved