(2B14) 7 SPOOL CONTROL VALVE
DISTRIBUTEUR A 7 ELEMENTS
7-FACH STEUERGERAET
DISTRIBUTORE 7 STELE
VALVULA DE MANDO DE 7 EMBOLOS DE DISTRIBUCION
7 SPOLIG MANOVERVENTIL

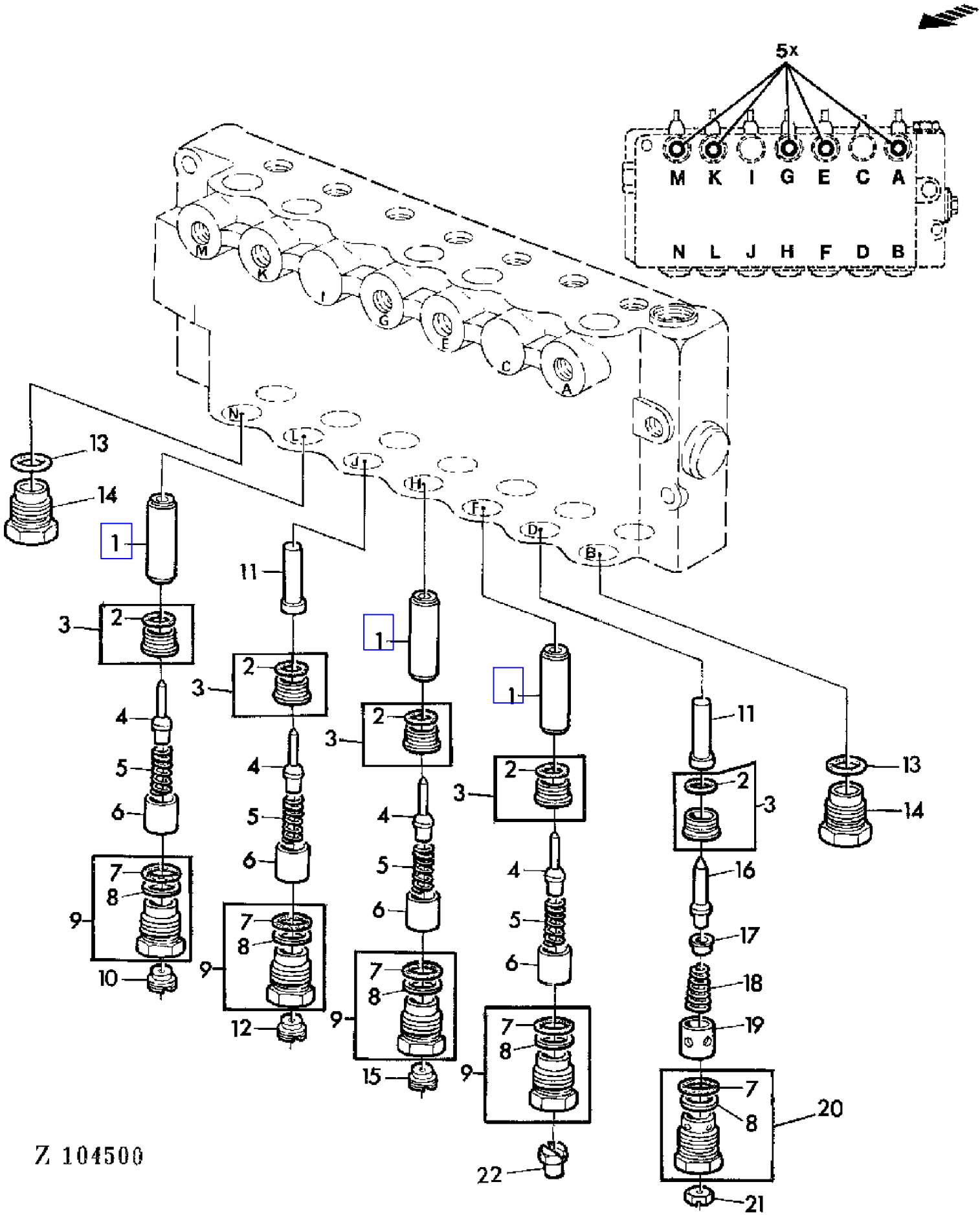

COPYRIGHT©1994 - 2008 DEERE & COMPANY Moline, Illinois All rights reserved

(2B14) 7 SPOOL CONTROL VALVE
DISTRIBUTEUR A 7 ELEMENTS
7-FACH STEUERGERAET
DISTRIBUTORE 7 STELE
VALVULA DE MANDO DE 7 EMBOLOS DE DISTRIBUCION
7 SPOLIG MANOVERVENTIL

KEY	PART NO.	PART NAME	QTY	SERIAL NO.	975	975HY	REMARKS
1	N31766	PLUNGER	3		X	X	
2	R27166	O-RING	5		X	X	
3	AZ17996	VALVE SEAT INSERT	5		X	X	INCL KEY 2
4	AN30940	POPPET	4		X	X	
5	N31765	SPRING	4		X	X	
6	Z30561	SPACER	4		X	X	
7	T13119	O-RING	5		X	X	
8	H35230	BACK-UP RING	5		X	X	
9	AZ22925	FITTING	4		X	X	INCL KEYS 7,8
10	Z32156	ORIFICE	1		X	X	ID = 0,810 MM
11	H35229	PLUNGER	2		X	X	
12	Z23364	ORIFICE	1		X	X	ID = 1,400 MM
13	R26448	O-RING	1		X		
14	R27218	FITTING PLUG	1		X		
15	Z32156	ORIFICE	1	- 021565	X	X	ID = 0,810 MM
	Z39832	RESTRICTOR	1	021566 -	X	X	ID = 1,150 MM
16	AH80223	POPPET	1		X	X	
17	H84537	GUIDE	1		X	X	
18	H81705	SPRING	1		X	X	
19	Z33642	GUIDE	1		X	X	
20	AZ22653	FITTING	1		X	X	INCL KEYS 7,8
21	Z44130	RESTRICTOR	1		X	X	AR, ID = 2,514 MM (SUB FOR Z23713)
	Z44135	RESTRICTOR	1		X	X	AR, ID = 3,048 MM (SUB FOR Z40697)
22	Z37687	ORIFICE	1		X		ID = 0,5 MM

COPYRIGHT©1994 - 2008 DEERE & COMPANY Moline, Illinois All rights reserved

(2B18) 7 SPOOL CONTROL VALVE
DISTRIBUTEUR A 7 ELEMENTS
7-FACH STEUERGERAET
DISTRIBUTORE 7 STELE
VALVULA DE MANDO DE 7 EMBOLOS DE DISTRIBUCION
7 SPOLIG MANOVERVENTIL

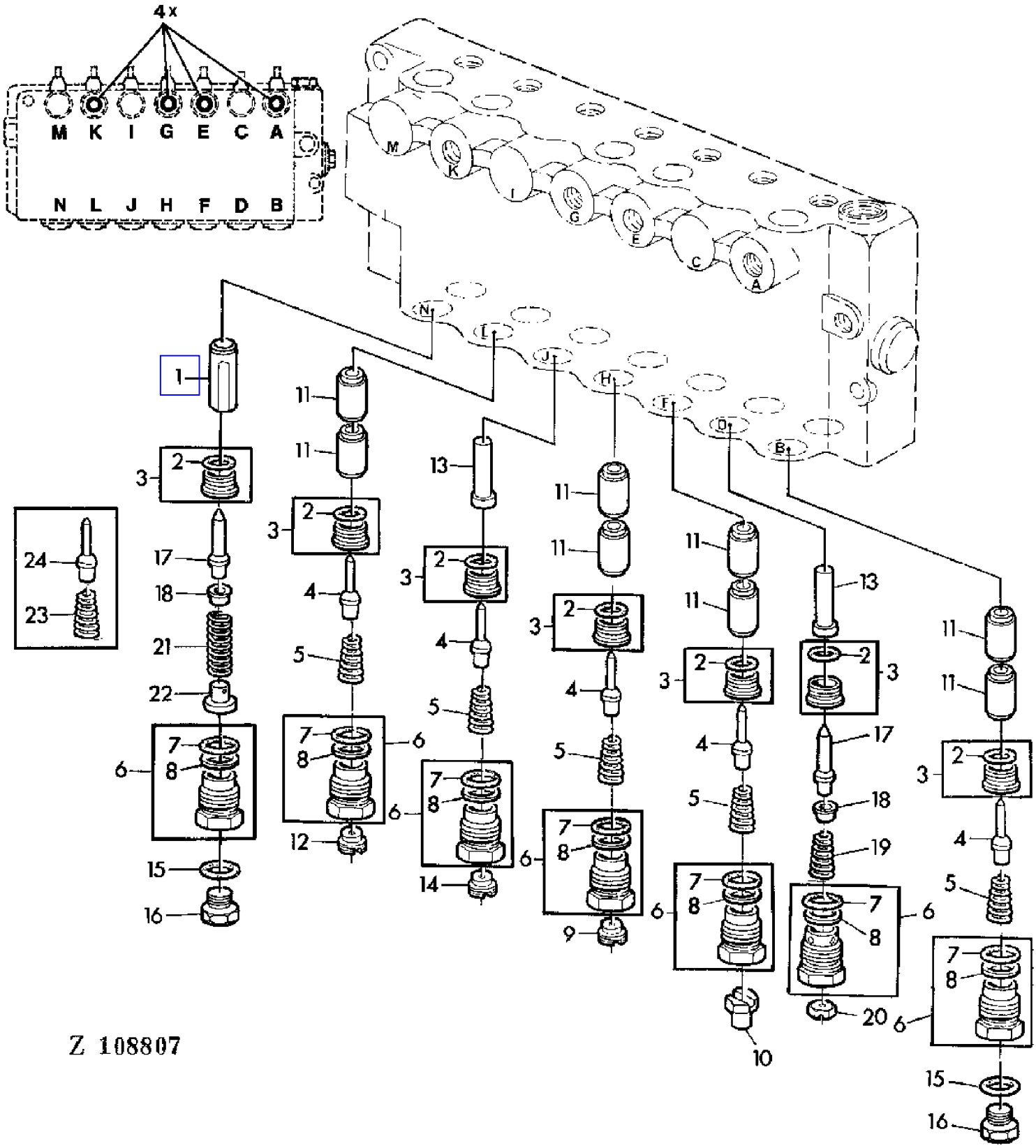

COPYRIGHT©1994 - 2008 DEERE & COMPANY Moline, Illinois All rights reserved

(2B18) 7 SPOOL CONTROL VALVE
DISTRIBUTEUR A 7 ELEMENTS
7-FACH STEUERGERAET
DISTRIBUTORE 7 STELE
VALVULA DE MANDO DE 7 EMBOLOS DE DISTRIBUCION
7 SPOLIG MANOVERVENTIL

KEY	PART NO.	PART NAME	QTY	SERIAL NO.	975	975HY	REMARKS
1	Z37686	PLUNGER	1		X	X	(SUB FOR Z43509)
2	R27166	O-RING	7		X	X	
3	AZ17996	VALVE SEAT INSERT	7		X	X	
4	AN30940	POPPET	5		X	X	
5	N111493	SPRING	5		X	X	
6	AZ33505	ADAPTER	7		X	X	
7	T13119	O-RING	7		X	X	
8	H35230	BACK-UP RING	7		X	X	
9	Z39832	RESTRICTOR	1		X	X	ID = 1,18 MM
10	Z37687	ORIFICE	1		X		ID = 0,500 MM
11	Z43508	PISTON	8		X	X	
12	Z32156	ORIFICE	1		X	X	ID = 0,810 MM
13	Z43510	PISTON	2		X	X	
14	Z42511	ORIFICE	1		X	X	
15	R26448	O-RING	2		X	X	
16	R27218	FITTING PLUG	2		X	X	
17	AH80223	POPPET	2		X	X	
18	H84537	GUIDE	2		X	X	
19	H81705	SPRING	1		X	X	
20	Z44135	RESTRICTOR	1		X	X	ID = 3 (SUB FOR Z40697)
21	H101996	SPRING	1		X	X	
22	Z45010	STOP	1		X	X	
23	N111493	SPRING	1		X	X	(ORD KEYS 17,18,21,22 APPL)
24	AN30940	POPPET	1		X	X	(ORD KEYS 17,18,21,22 APPL)

COPYRIGHT©1994 - 2008 DEERE & COMPANY Moline, Illinois All rights reserved

(2B20) 7 SPOOL CONTROL VALVE
DISTRIBUTEUR A 7 ELEMENTS
7-FACH STEUERGERAET
DISTRIBUTORE 7 STELE
VALVULA DE MANDO DE 7 EMBOLOS DE DISTRIBUCION
7 SPOLIG MANOEVERVENTIL

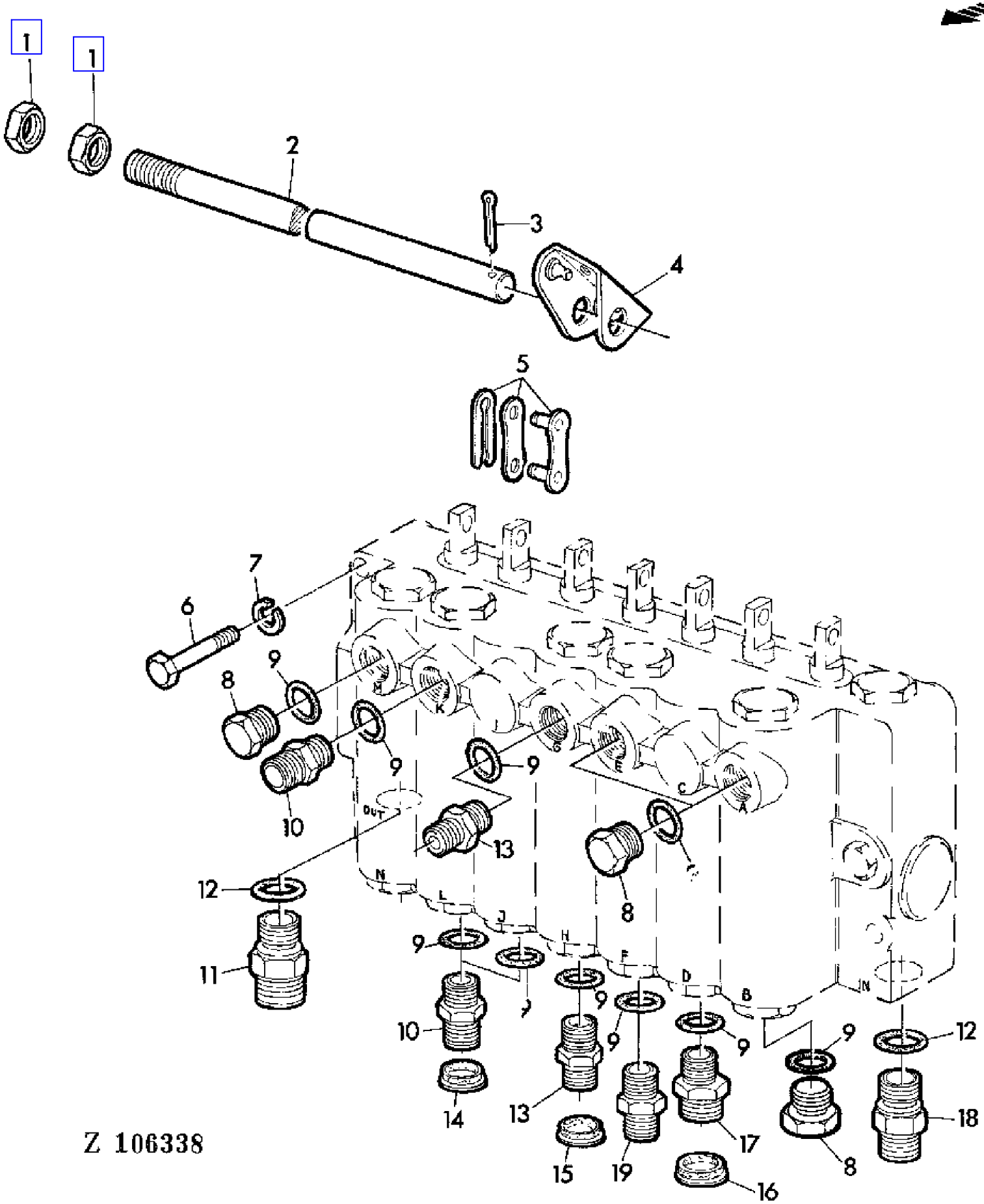

COPYRIGHT©1994 - 2008 DEERE & COMPANY Moline, Illinois All rights reserved

(2B20) 7 SPOOL CONTROL VALVE
DISTRIBUTEUR A 7 ELEMENTS
7-FACH STEUERGERAET
DISTRIBUTORE 7 STELE
VALVULA DE MANDO DE 7 EMBOLOS DE DISTRIBUCION
7 SPOLIG MANOEVERVENTIL

KEY	PART NO.	PART NAME	QTY	SERIAL NO.	975	975HY/4	REMARKS
1	14M7209	NUT	2		X	X	M18 X 1,5
2	Z35415	SHAFT	1		X	X	
3	11M7024	COTTER PIN	1		X	X	4 X 36 MM
4	AZ22870	ROCKER ARM	4		X	X	
5	AZ23842	LINK	4		X	X	
6	19M7184	CAP SCREW	2		X	X	M8 X 55
7	12M7008	LOCK WASHER	2		X	X	8 MM
8	R27218	FITTING PLUG	4		X	X	
9	R26448	O-RING	11		X	X	
10	Z32963	FITTING	2		X	X	
11	Z32967	FITTING	1		X	X	
12	R26375	O-RING	2		X	X	
13	Z32969	FITTING	2		X	X	
14	Z22710	PLUG	AR		X	X	
15	Z26168	PLUG	AR		X	X	
16	Z22711	PLUG	AR		X	X	
17	Z32968	FITTING	1		X	X	
18	Z34063	FITTING	1		X	X	
19	Z45306	FITTING	1		X		(SUB FOR Z37684)

COPYRIGHT©1994 - 2008 DEERE & COMPANY Moline, Illinois All rights reserved

(2B12) 7-SPOOL CONTROL VALVE
DISTRIBUTEUR A 7 ELEMENTS
7-FACH STEUERGERAET
DISTRIBUTORE A 7 STELI
VALVULA DE MANDO DE 7 EMBOLOS DE DISTRIBUCION
MANOVERVENTIL-7 SPOLIG

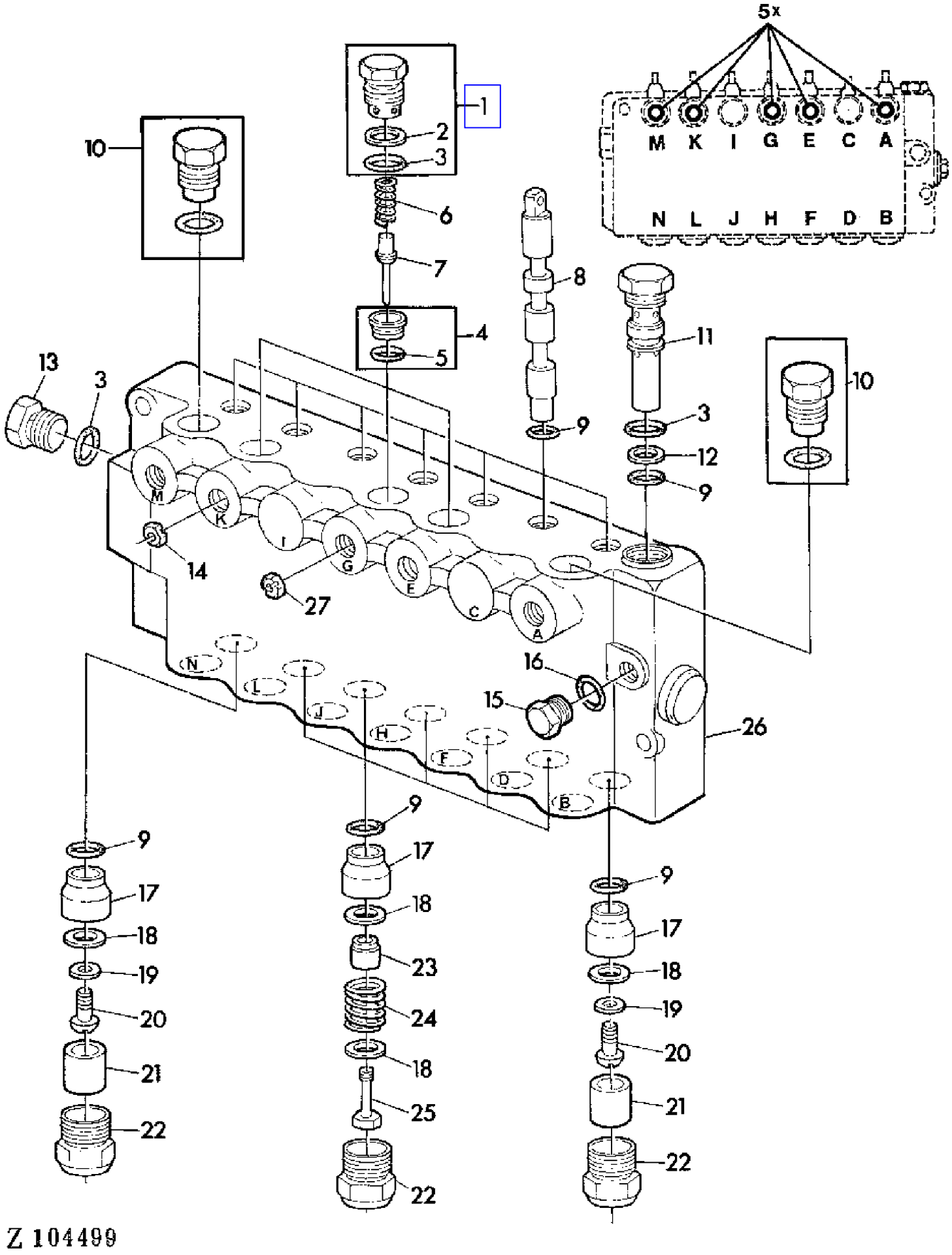

COPYRIGHT©1994 - 2008 DEERE & COMPANY Moline, Illinois All rights reserved

(2B12) 7-SPOOL CONTROL VALVE
DISTRIBUTEUR A 7 ELEMENTS
7-FACH STEUERGERAET
DISTRIBUTORE A 7 STELI
VALVULA DE MANDO DE 7 EMBOLOS DE DISTRIBUCION
MANOVERVENTIL-7 SPOLIG

KEY	PART NO.	PART NAME	QTY	SERIAL NO.	9 7 5 9 H 7 Y 5 4	REMARKS
1	AH64080	FITTING	3		X X	INCL KEYS 2,3
2	H35230	BACK-UP RING	3		X X	
3	T13119	O-RING	4		X X	
4	AZ17996	VALVE SEAT INSERT	3		X X	INCL KEY 5
5	R27166	O-RING	3		X X	(SUB FOR Z29304)
6	N31765	SPRING	3		X X	
7	AN30940	POPPET	3		X X	
8	.....	POPPET	7		X X	NSEP
9	R375	O-RING	15		X X	
10	.....	FITTING PLUG	2		X X	(ORD AH64080)
11	AH63330	RELIEF VALVE	1		X X	
12	H63357	BACK-UP RING	1		X X	
13	R27474	DRAIN PLUG	1		X X	
14	Z44132	RESTRICTOR	1		X X	ID = 0,9 MM (SUB FOR Z28045)
15	R31631	DRAIN PLUG	1		X X	
16	R26287	O-RING	1		X X	
17	N111488	BUSHING	7		X X	
18	N31767	WASHER	12		X X	
19	24M7139	WASHER	2		X X	6,4 MM
20	21H1352	SCREW	2		X X	1/4" X 3/8"
21	Z30561	SPACER	2		X X	
22	AH78788	PLUG	7		X X	
23	H62801	BUSHING	5		X X	
24	H60819	SPRING	5		X X	
25	H63987	CAP SCREW	5		X X	
26	AZ29351	CONTROL VALVE	1		X X	(A) (ORD AZ33486) (SUB FOR AZ23112, AZ29350)
27	Z44132	RESTRICTOR	1	- 021565	X X	ID = 0,9 MM (SUB FOR Z28045)
	Z44134	RESTRICTOR	1	021566 -	X X	ID = 1,3 MM (SUB FOR Z39833)
..	AZ24156	KIT	1		X X	KIT (INCL KEYS 2,3,5,9,12,16 GRID 2B12, KEYS 2,7,8,16,17 GRID 2B14)

(A) WITHOUT ORIFICES
SANS LIMITEUR
OHNE DROSSEL
SENZA ORIFICI
SIN LIMITADOR
UTAN STRYPNINGAR

COPYRIGHT©1994 - 2008 DEERE & COMPANY Moline, Illinois All rights reserved

(2B16) 7-SPOOL CONTROL VALVE
DISTRIBUTEUR A 7 ELEMENTS
7-FACH STEUERGERAET
DISTRIBUTORE A 7 STELI
VALVULA DE MANDO DE 7 EMBOLOS DE DISTRIBUCION
MANOVERVENTIL-7 SPOLIG

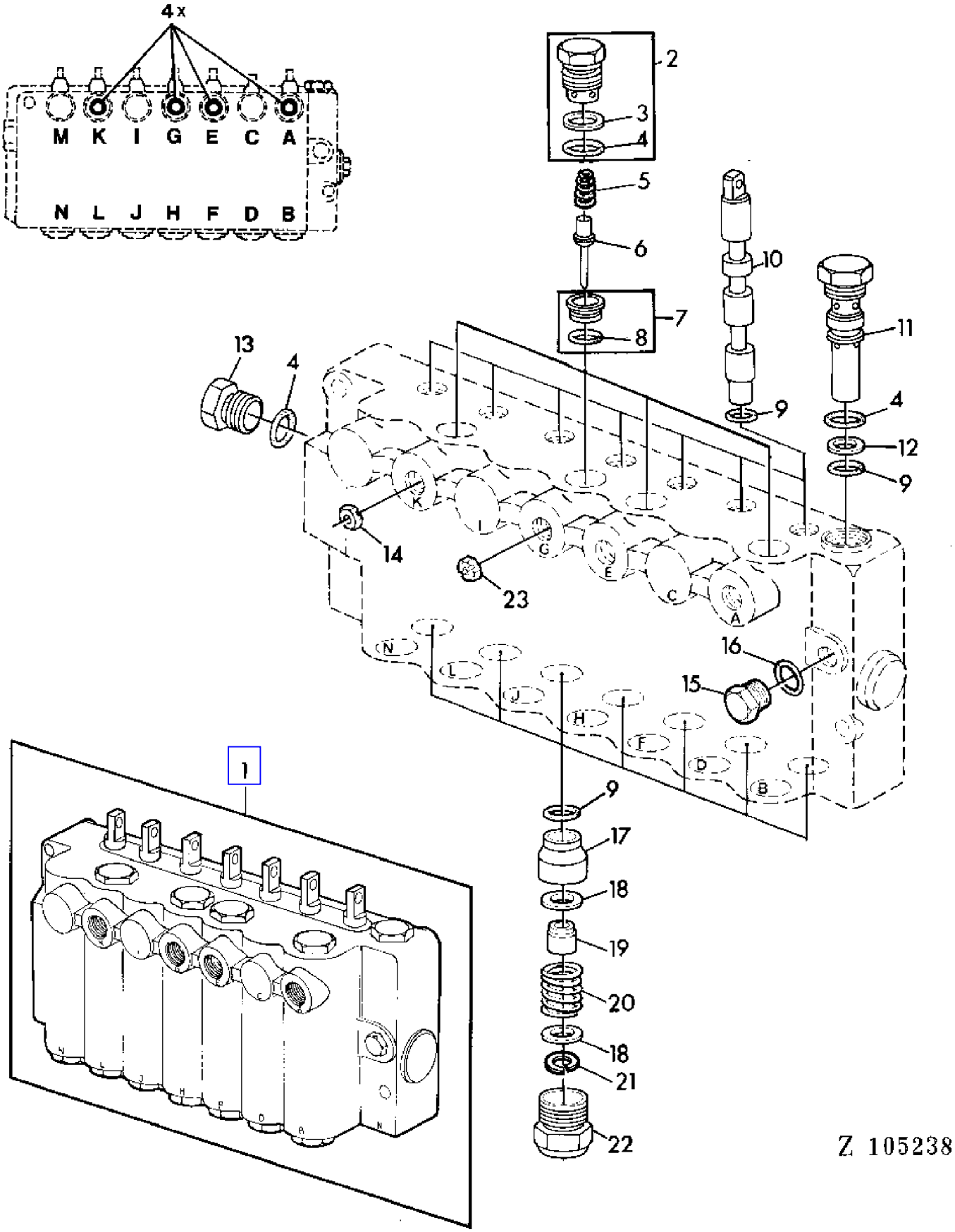

COPYRIGHT©1994 - 2008 DEERE & COMPANY Moline, Illinois All rights reserved

(2B16) 7-SPOOL CONTROL VALVE
DISTRIBUTEUR A 7 ELEMENTS
7-FACH STEUERGERAET
DISTRIBUTORE A 7 STELI
VALVULA DE MANDO DE 7 EMBOLOS DE DISTRIBUCION
MANOVERVENTIL-7 SPOLIG

KEY	PART NO.	PART NAME	QTY	SERIAL NO.	975	975HY/4	REMARKS
1	AZ33486	CONTROL VALVE	1		X	X	(SUB FOR AZ29351)
2	AZ33504	PLUG	4		X	X	
3	H35230	BACK-UP RING	AR		X	X	
4	T13119	O-RING	AR		X	X	
5	N111493	SPRING	4		X	X	
6	AN30940	POPPET	4		X	X	
7	AZ17996	VALVE SEAT INSERT	4		X	X	
8	R27166	O-RING	AR		X	X	
9	R375R	O-RING	AR		X	X	
10	.....	POPPET	7		X	X	NSEP
11	AH63330	RELIEF VALVE	1		X	X	
12	H63357	BACK-UP RING	1		X	X	
13	R27474	DRAIN PLUG	1		X	X	
14	Z44132	RESTRICTOR	1		X	X	ID = 0,9 MM (SUB FOR Z28045)
15	R31631	DRAIN PLUG	1		X	X	
16	R26287	O-RING	1		X	X	
17	N111488	BUSHING	7		X	X	
18	N31767	WASHER	14		X	X	
19	H62801	BUSHING	7		X	X	
20	H60819	SPRING	7		X	X	
21	32244	SNAP RING	7		X	X	
22	AH78788	PLUG	7		X	X	
23	Z44134	RESTRICTOR	1		X	X	ID = 1,3 MM (SUB FOR Z39833)
..	AZ24156	KIT	1		X	X	KIT (INCL KEYS 3,4,8,9,12,16 GRID 2B16, KEYS 2,7,8,17,18 GRID 2B18)

COPYRIGHT©1994 - 2008 DEERE & COMPANY Moline, Illinois All rights reserved

(2H08) ACCESSORIES
ACCESSOIRES
ZUBEHOERTEILE
ACCESSORI
ACCESORIOS
TILLBEHORSDELAR

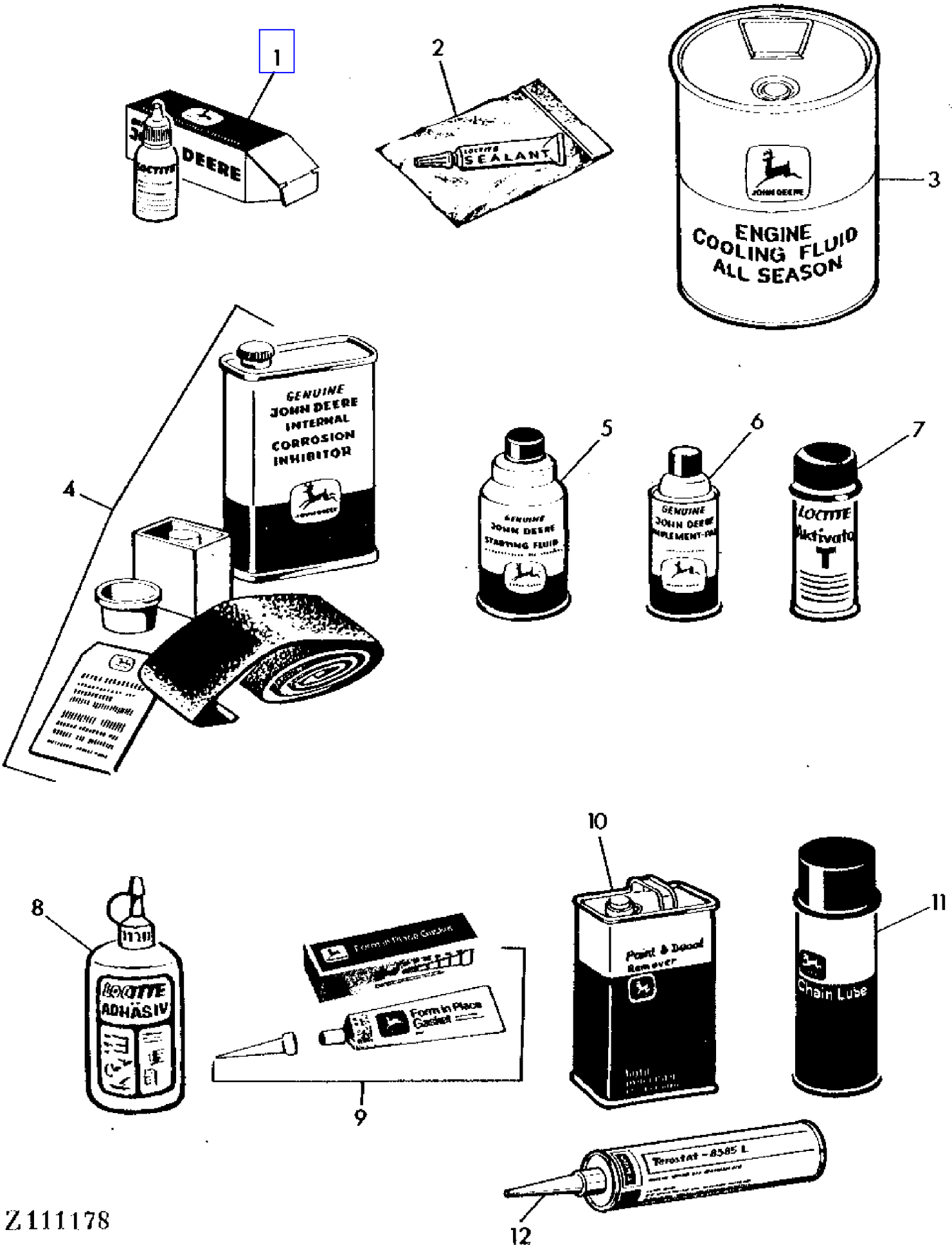

COPYRIGHT©1994 - 2008 DEERE & COMPANY Moline, Illinois All rights reserved

(2H08) ACCESSORIES
ACCESSOIRES
ZUBEHOERTEILE
ACCESSORI
ACCESORIOS
TILLBEHORSDELAR

KEY	PART NO.	PART NAME	QTY	SERIAL NO.	975	975HY/4	REMARKS
1	AT14264	SEALANT	AR		X	X	(A) LOCTITE SEALANT, 59 CCM (2FL.02) PACKG (5)
	AT26340	SEALANT	AR		X	X	(B) LOCTITE SEALANT, 59 CCM (2FL.02) PACKG (5)
2	AT14927	SEALANT	AR		X	X	(A) LOCTITE SEALANT, 2 CCM PACKG (10)
3	DD14134	COOLANT	AR		X	X	5L (1,3.U.S.GAL) (SUB FOR T19566)
	DD14345	COOLANT	AR		X	X	20L (5,3.U.S.GAL) DD 14135 (SUB FOR DD14135, T19566)
	DD14136	COOLANT	AR		X	X	60L (15,9.U.S.GAL) (SUB FOR T19566)
	DD14346	COOLANT	AR		X	X	200L (52,9.U.S.GAL) (SUB FOR T19566 APPL) (SUB FOR DD14137)
4	AR41785	KIT	AR		X	X	KIT
5	AR27814	STARTING FLUID	AR		X	X	PACKG (12)
6	L94772	PAINT	AR		X	X	GRUEN, GREEN, VERT, VERDE, GROEN
7	AL25914	ACTIVATOR	1		X	X	
8	AL25913	ADHESIVE	1		X	X	
9	TY15130	SEALANT	1		X	X	3 OZ,90 G (SUB FOR PT94)
10	L94741	PAINT	1		X	X	(1L) GRUEN, GREEN, VERT, VERDE, GRON
	L94743	PAINT	1		X	X	(1L) GELB, YELLOW, JAUNE, AMARILLO, GIALLO, GUL
11	TY6240	LUBRICANT	AR		X	X	15 OZ, PACKG (12)
12	L41074	SEALANT	1		X	X	TEROSTAT, 310CCM

(A) HIGH VISCOSITY
VISCOSITE ELEVEE
HOHE VISKOSITAET
ALTA VISCOSITA
ALTA VISCOSIDAD
HOG VISKOSITET

(B) LOW VISCOSITY
VISCOSITE BASSE
NIEDRIGE VISKOSITAET
BASSA VISCOSITA
BAJA VISCOSIDAD
LAG VISKOSITET

COPYRIGHT©1994 - 2008 DEERE & COMPANY Moline, Illinois All rights reserved

(2C07) ACCUMULATOR
RESERVOIR D'AZOTE
DRUCKSPEICHER
ACCUMULATORE
ACUMULADOR DE PRESION
ACKUMULATOR

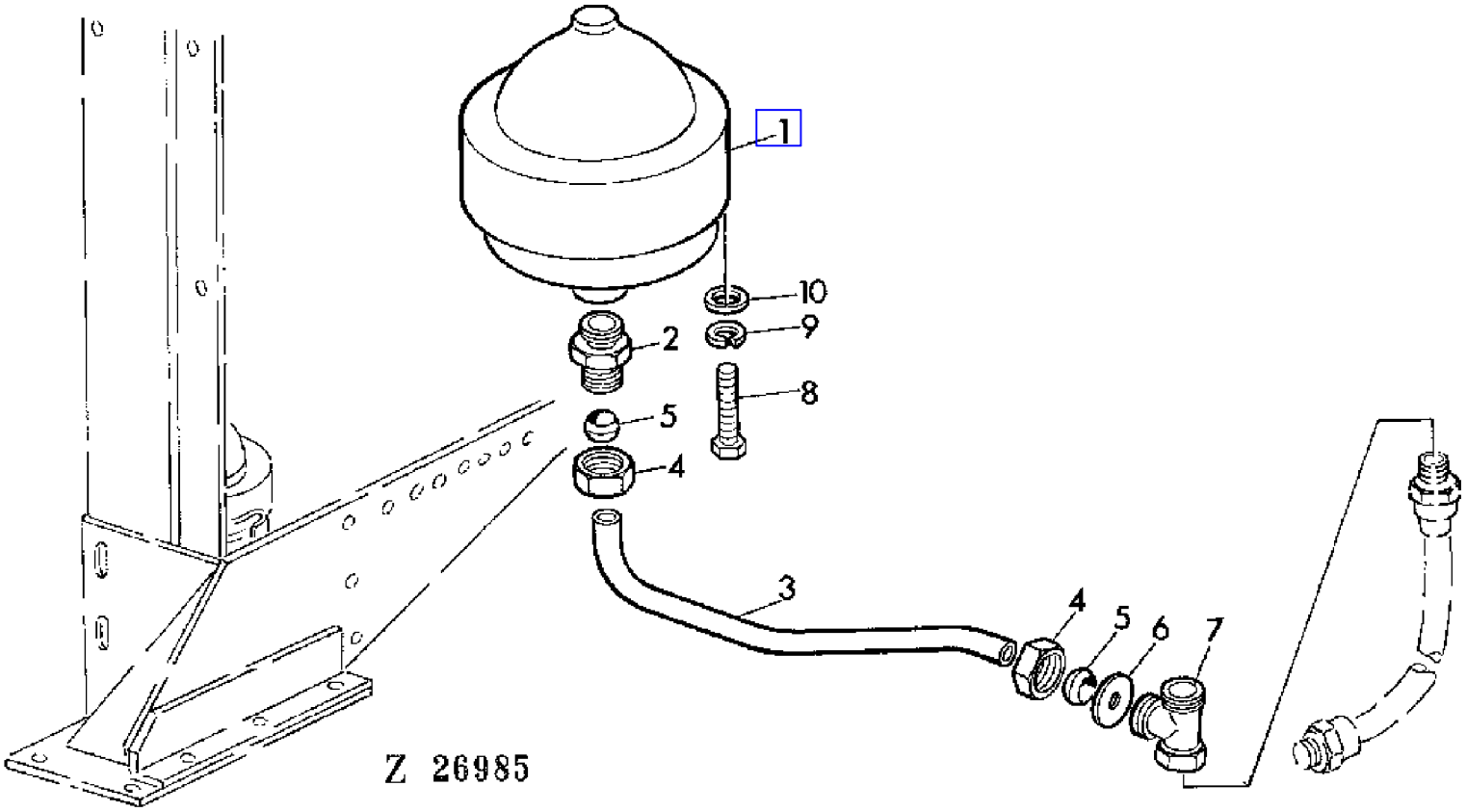

COPYRIGHT©1994 - 2008 DEERE & COMPANY Moline, Illinois All rights reserved

(2C07) ACCUMULATOR
RESERVOIR D'AZOTE
DRUCKSPEICHER
ACCUMULATORE
ACUMULADOR DE PRESION
ACKUMULATOR

KEY	PART NO.	PART NAME	QTY	SERIAL NO.	975	975HY/4	REMARKS
1	AZ24189	ACCUMULATOR	1		X	X	
2	Z33997	HYD. QUICK-CONNECT COUPLER	1		X	X	
3	AZ24018	OIL LINE	1		X	X	ASSY, INCL KEYS 4,5
4	Z32971	TUBE NUT	2		X	X	
5	Z32994	TAPERED SLEEVE	2		X	X	
6	Z34005	WASHER	1		X	X	
7	AZ22845	FITTING	1		X	X	
8	19M7298	CAP SCREW	1		X	X	M8 X35
9	12M7008	LOCK WASHER	1		X	X	8 MM
10	24M7036	WASHER	1		X	X	9 MM

COPYRIGHT©1994 - 2008 DEERE & COMPANY Moline, Illinois All rights reserved

(4B08) ADJUSTING SPINDLE FOR VARIABLE SHEAVES CYLINDER
MOYEU DU VARIATEUR DU BATTEUR
VERSTELLSPINDEL FUER DRESCHTROMMELVARIATOR
ASTA REGOLABILE DEL VARIATORE DEL BATTITORE
HUSILLO DE AJUSTE PARA EL VARIADOR DEL CILINDRO DESGRANADOR
JUSTERSPINDEL FOR CYLINDERVARIATOR

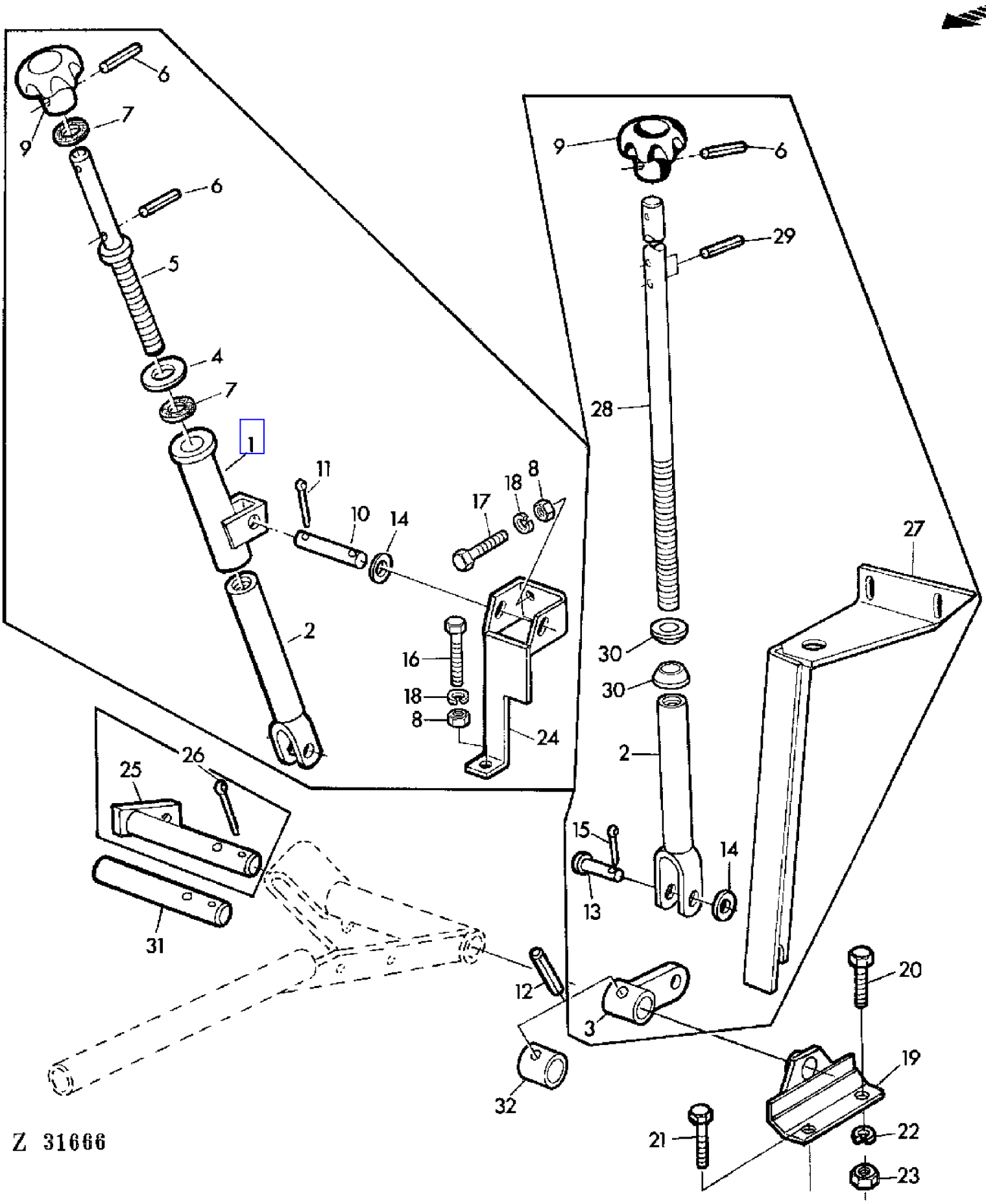

COPYRIGHT©1994 - 2008 DEERE & COMPANY Moline, Illinois All rights reserved

(4B08) ADJUSTING SPINDLE FOR VARIABLE SHEAVES CYLINDER
MOYEU DU VARIATEUR DU BATTEUR
VERSTELLSPINDEL FUER DRESCHTROMMELVARIATOR
ASTA REGOLABILE DEL VARIATORE DEL BATTITORE
HUSILLO DE AJUSTE PARA EL VARIADOR DEL CILINDRO DESGRANADOR
JUSTERSPINDEL FOR CYLINDERVARIATOR

KEY	PART NO.	PART NAME	QTY	SERIAL NO.			975	975HY/4	REMARKS
1	AZ22440	SLEEVE	1		-	011231	X		
2	AZ19450	FORK	1		-	011231	X		
	AZ25481	ADJUSTER	1	011232	-	018357	X		
3	AZ23841	LEVER	1		-	011231	X		
	AZ25480	LEVER	1	011232	-	018812	X		
4	L18946	WASHER	1		-	011231	X		
5	AZ19452	LIFT LINK	1		-	011231	X		
6	34M7031	SPRING PIN	2		-	011231	X		5 X 24 MM
7	Z32829	WASHER	2		-	011231	X		
8	14M7029	NUT	3				X		M8
9	Z30841	KNOB	1		-	018812	X		
10	44M7021	PIN	1		-	011231	X		12 X 75 X 68 MM (SUB FOR Z30880)
11	11M7011	COTTER PIN	7		-	011231	X		3 X 15 MM
12	34M7046	SPRING PIN	1				X		8 X 30 MM
13	46M4901	PIN	1		-	018812	X		12H 11 X 40 X 35 MM
14	24M7043	WASHER	4				X		12 MM
15	11M7020	COTTER PIN	3				X		4 X 25 MM
16	19M7298	CAP SCREW	1				X		M8 X 35
17	19M7163	CAP SCREW	2				X		M8 X 25
18	12M7008	LOCK WASHER	3				X		8 MM
19	AZ18547	BRACKET	2				X		
20	19M7167	CAP SCREW	2				X		M10 X 25
21	19M7288	CAP SCREW	2				X		M8 X 30
22	12M7013	LOCK WASHER	2				X		10 MM
23	14M7140	NUT	2				X		M10
24	AZ22442	BRACKET	1		-	011231	X		
25	AZ18541	SHAFT	1		-	018357	X		
26	11M7029	COTTER PIN	1				X		5 X 40 MM
27	AZ25482	BRACKET	1	011232	-	018357	X		
28	Z36582	ADJUSTER	1	011232	-	018357	X		
29	34M7032	SPRING PIN	2	011232	-	018812	X		5 X 28 MM
30	47M7006	WASHER	2	011232	-	018357	X		17 MM
31	Z29941	SHAFT	1	018358	-		X		
32	Z29951	BUSHING	1	018813	-		X		

COPYRIGHT©1994 - 2008 DEERE & COMPANY Moline, Illinois All rights reserved

(3B07) ADJUSTMENT-HYDRAULIC SWING UNLOADING AUGER
REGLAGE DE LA GOULOTTE DE VIDANGE HYDRAULIQUE
VERSTELLUNG SCHWENKBARES ENTLEERROHR
CAVO REGOLAZIONE TUBO DI SCARICO RIBALTABILE
VARILLAJE PARA AJUSTE HIDR.DE LA MANGA DE DESCARGA
MANOVERWIRE FOR HYDRAULISK SVANGBAR TOMNINGSSKRUV

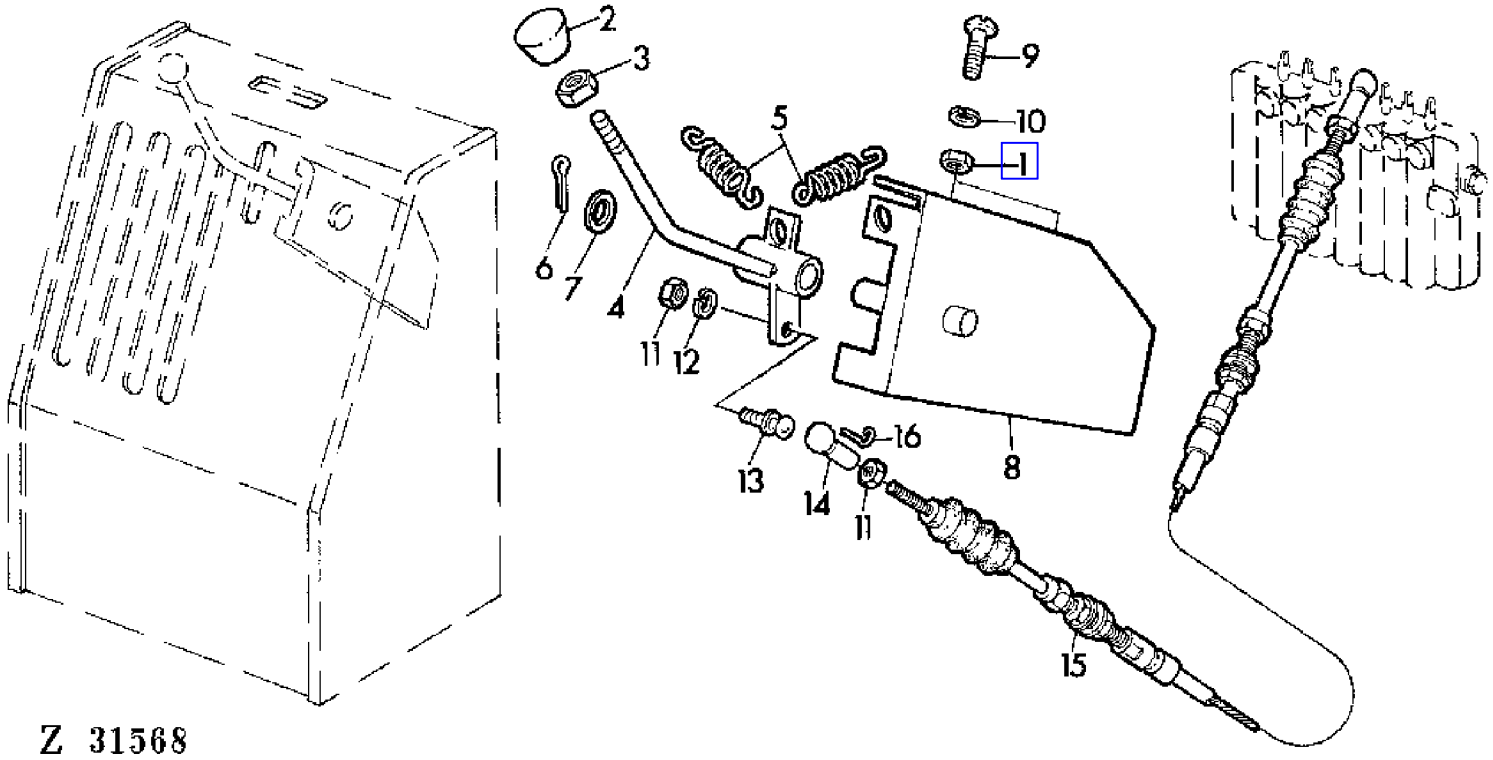

COPYRIGHT©1994 - 2008 DEERE & COMPANY Moline, Illinois All rights reserved

(3B07) ADJUSTMENT-HYDRAULIC SWING UNLOADING AUGER
REGLAGE DE LA GOULOTTE DE VIDANGE HYDRAULIQUE
VERSTELLUNG SCHWENKBARES ENTLEERROHR
CAVO REGOLAZIONE TUBO DI SCARICO RIBALTABILE
VARILLAJE PARA AJUSTE HIDR.DE LA MANGA DE DESCARGA
MANOVERWIRE FOR HYDRAULISK SVANGBAR TOMNINGSSKRUV

KEY	PART NO.	PART NAME	QTY	SERIAL NO.	975	975HY/4	REMARKS
1	14M7029	NUT	2		X	X	M8
2	Z31208	KNOB	1		X	X	
3	14M7152	NUT	1		X	X	M10 (SUB FOR Z23533)
4	AZ35437	LEVER	1		X	X	(SUB FOR AZ22673)
5	Z21613	EXTENSION SPRING	2		X		
	L12731	SPRING	2			X	
6	11M7013	COTTER PIN	1		X	X	3,2 X 20 MM
7	24M7111	WASHER	1		X	X	13 MM
8	AZ23852	HOLDER	1		X	X	
9	21M7081	SCREW	2		X	X	M8 X 15
10	12M7008	LOCK WASHER	2		X	X	8 MM
11	14M7011	NUT	1		X	X	M5
12	12M7011	LOCK WASHER	1		X	X	5 MM
13	55M7003	BALL STUD	2		X	X	
14	56M5259	BALL JOINT SOCKET	2		X	X	
15	AZ23671	PUSH PULL CABLE	1		X	X	LGTH = 1820 MM, ASSY, INCL KEYS 12,14,16
16	56M5258	BALL JOINT RETAINER	2		X	X	

COPYRIGHT©1994 - 2008 DEERE & COMPANY Moline, Illinois All rights reserved

(1C21) AIR CLEANER SYSTEM
SYSTEME DE FILTRAGE D'AIR
LUFTFILTERANLAGE
FILTRO ARIA
SISTEMA PURIFICADOR DE AIRE
LUFTRENARE

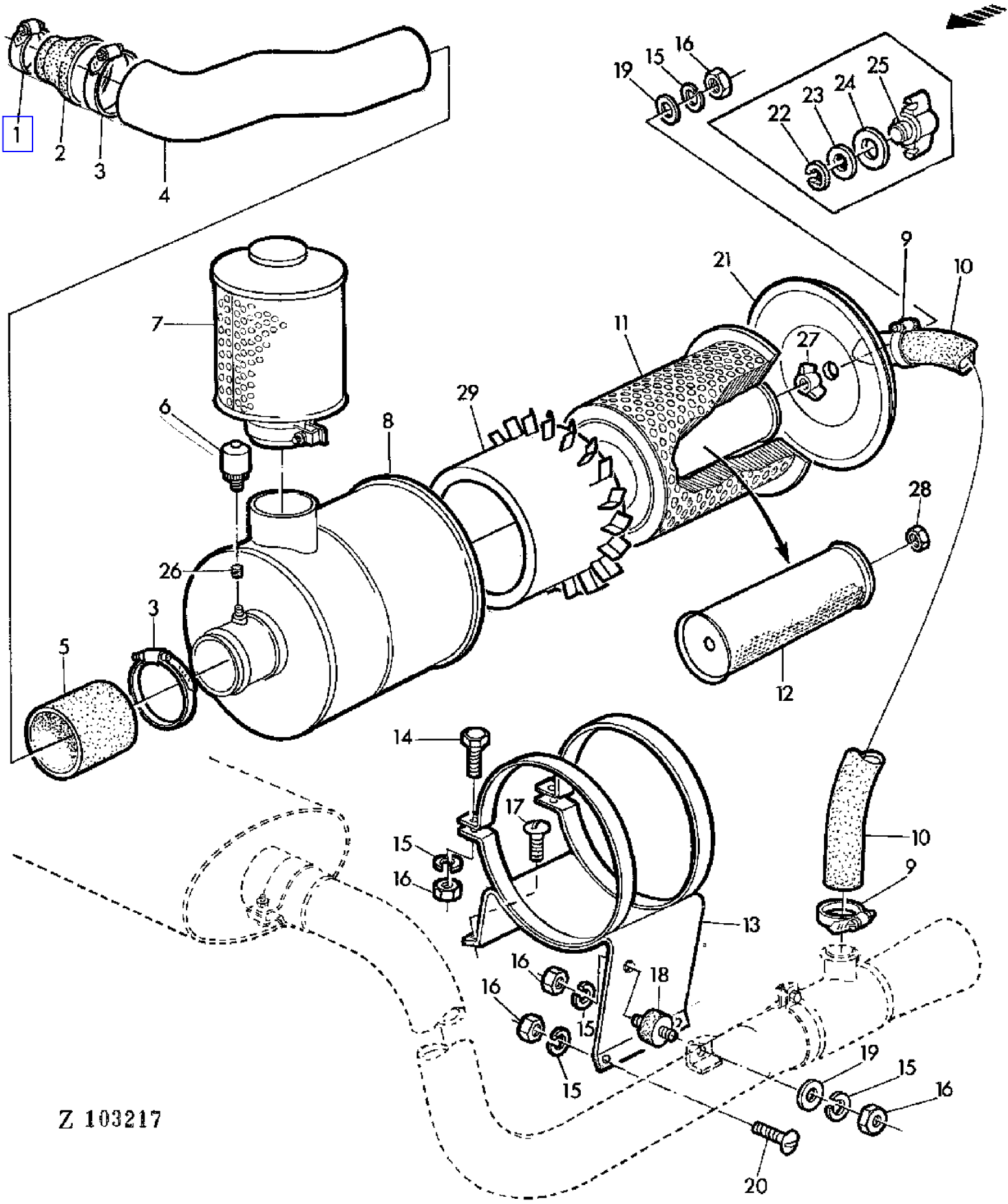

COPYRIGHT©1994 - 2008 DEERE & COMPANY Moline, Illinois All rights reserved

(1C21) AIR CLEANER SYSTEM
SYSTEME DE FILTRAGE D'AIR
LUFTFILTERANLAGE
FILTRO ARIA
SISTEMA PURIFICADOR DE AIRE
LUFTRENARE

KEY	PART NO.	PART NAME	QTY	SERIAL NO.			975	975HY/4	REMARKS
1	Z30340	CLAMP	1	015188	-		X	X	
2	Z37199	HOSE	1	015188	-		X		
	Z37638	HOSE	1					X	
3	Z29925	CLAMP	3	015188	-		X	X	
4	AZ25921	AIR INTAKE	1	015188	-		X	X	
5	Z37283	HOSE	1	015188	-		X	X	
6	AT25983	AIR RESTRICTION INDICATOR	1	015188	-		X	X	
7	AZ26332	PRESCREENER	1	015188	-		X	X	
8	AZ29229	AIR CLEANER	1	015188	-		X	X	ASSY, INCL KEYS 11,12,15,16,19, 21,26-29 (SUB FOR AZ26090)
9	Z21160	CLAMP	2	015188	-		X	X	
10	Z37262	HOSE	1	015188	-		X	X	
11	AZ26091	FILTER ELEMENT	1	015188	-		X	X	
12	AZ26007	FILTER ELEMENT	1	015188	-		X	X	
13	AZ25915	SUPPORT	1	015188	-		X	X	
14	19M7288	CAP SCREW	2	015188	-		X	X	M8 X 30
15	12M7008	LOCK WASHER	AR	015188	-		X	X	8 MM
16	14M7029	NUT	AR	015188	-		X	X	M8
17	21M7081	SCREW	2	015188	-		X	X	M8 X 15
18	AZ22733	ABSORBER	1	015188	-		X	X	
19	24M7036	WASHER	AR	015188	-		X	X	9 MM
20	21M7089	SCREW	1	015188	-		X	X	M8 X 20
21	AZ26757	COVER	1	015188	-		X	X	
22	Z37823	SNAP RING	1	015188	-	024597	X	X	
23	Z37824	WASHER	1	015188	-	024597	X	X	
24	Z37825	WASHER	1	015188	-	024597	X	X	
25	Z37826	WING NUT	1	015188	-	024597	X	X	
26	Z36939	FELT	1	015188	-		X	X	
27	Z36940	WING NUT	1	015188	-		X	X	
28	14M7158	NUT	1	015188	-	024597	X	X	M16
29	Z44496	LOUVER	1	015188	-		X	X	

COPYRIGHT©1994 - 2008 DEERE & COMPANY Moline, Illinois All rights reserved

(3E04) AIR CONDITIONING COVERS
CACHES DE LA CLIMATISATION
VERKLEIDUNG-KLIMAANLAGE
RIVESTIMENTI,IMPIANTO DELL'ARIA CONDIZIONATA
REVESTIMIENTOS,SISTEMA DE AIRE ACONDICIONADO
BEKLADNAD FOR LUFTKONDITIONERINGSSYSTEM

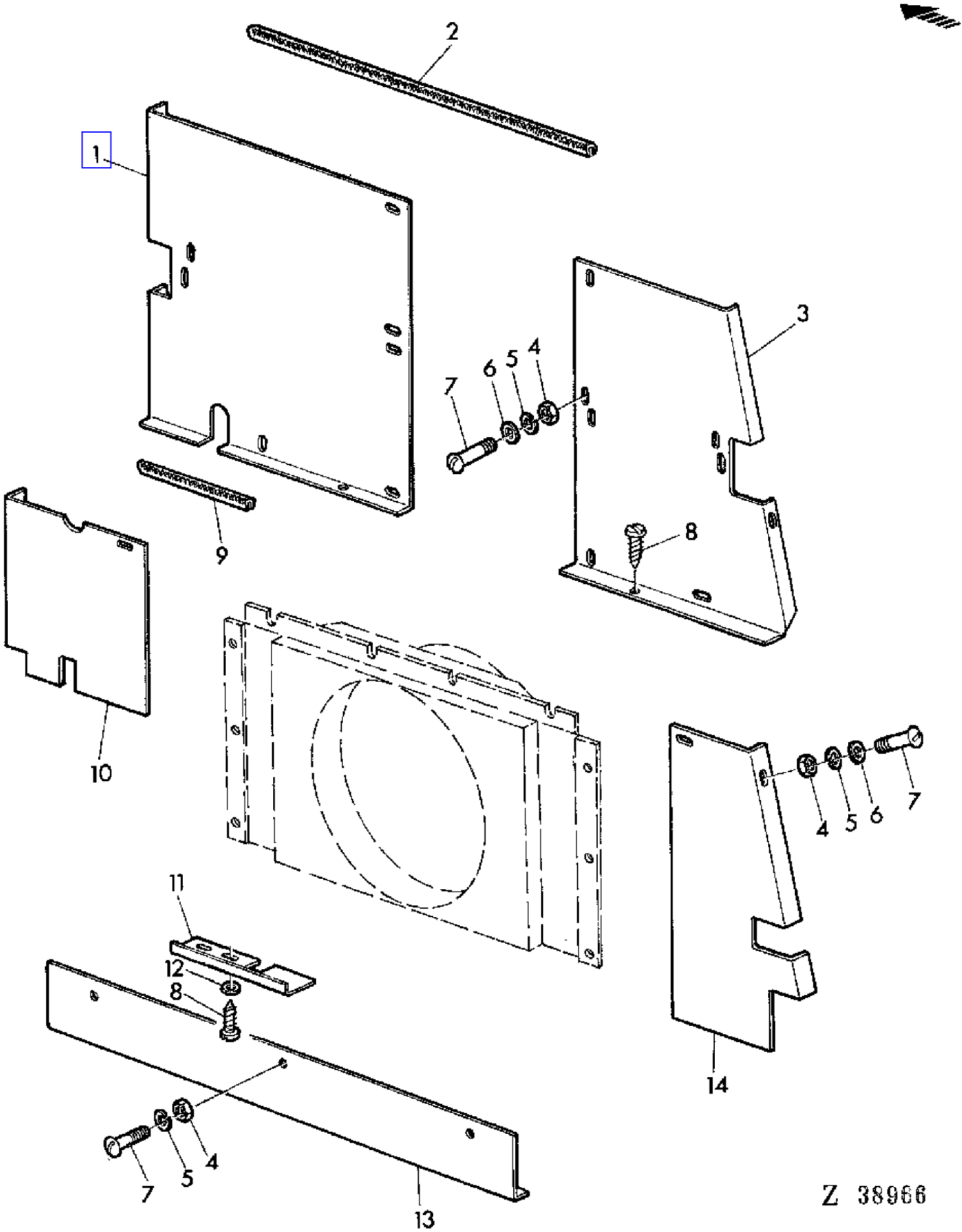

COPYRIGHT©1994 - 2008 DEERE & COMPANY Moline, Illinois All rights reserved

(3E04) AIR CONDITIONING COVERS
CACHES DE LA CLIMATISATION
VERKLEIDUNG-KLIMAANLAGE
RIVESTIMENTI,IMPIANTO DELL'ARIA CONDIZIONATA
REVESTIMIENTOS,SISTEMA DE AIRE ACONDICIONADO
BEKLADNAD FOR LUFTKONDITIONERINGSSYSTEM

KEY	PART NO.	PART NAME	QTY	SERIAL NO.	975	975HY/4	REMARKS
1	Z42152	SHIELD	1		X	X	
2	Z37777	GUARD	1		X	X	
3	Z42153	SHIELD	1		X	X	
4	14M7027	NUT	AR		X	X	M6
5	12M7012	LOCK WASHER	AR		X	X	6 MM
6	24M7054	WASHER	AR		X	X	6,4 MM
7	21M7031	SCREW	AR		X	X	M6 X 15
8	37M7029	SCREW	AR		X	X	M5,5 X 13
9	Z35897	GUARD	1		X	X	
10	Z42155	SHIELD	1		X	X	
11	Z42158	SHIELD	1		X	X	
12	24M7087	WASHER	AR		X	X	5,5 MM
13	Z42156	SHIELD	1		X	X	
14	Z42154	SHIELD	1		X	X	

COPYRIGHT©1994 - 2008 DEERE & COMPANY Moline, Illinois All rights reserved

(1C17) AIR INTAKE MANIFOLD
PIPE D'ADMISSION
ANSAUGKRUEMMER
COLLETTORE D'AMMISSIONE
TUBO DE ADMISION DE AIRE
LUFTINTAG

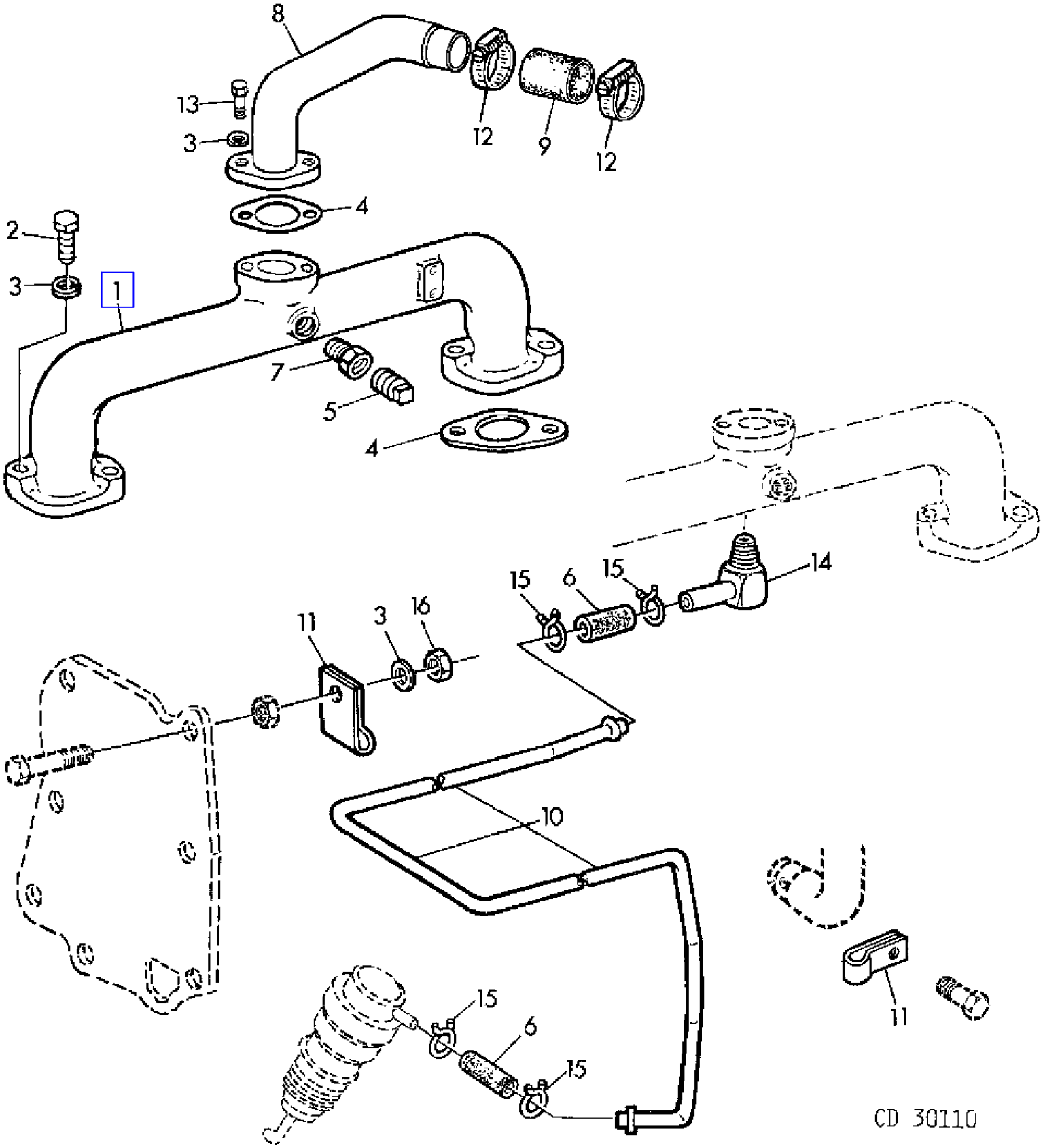

COPYRIGHT©1994 - 2008 DEERE & COMPANY Moline, Illinois All rights reserved

(1C17) AIR INTAKE MANIFOLD
PIPE D'ADMISSION
ANSAUGKRUEMMER
COLLETTORE D'AMMISSIONE
TUBO DE ADMISION DE AIRE
LUFTINTAG

KEY	PART NO.	PART NAME	QTY	ENGINE SERIAL NO.		975	975HY/4	REMARKS
1	CD14407	INTAKE MANIFOLD	1			X	X	
2	19H988	CAP SCREW	3			X	X	3/8" X 1-1/4"
	19H1800	CAP SCREW	1			X	X	3/8" X 1-1/2"
3	12H304	LOCK WASHER	6		- 494726	X	X	3/8"
	12H304	LOCK WASHER	7	494727	-	X	X	3/8"
4	T20159	GASKET	3			X	X	
5	15H255	PIPE PLUG	AR			X	X	3/8"
6	CD15398	HOSE	2			X	X	(SUB FOR CD14724)
7	T27986	FITTING	1			X	X	
8	T30819	ELBOW FITTING	1			X	X	
9	R56551	HOSE	1			X	X	(SUB FOR T21703)
10	R73722	PIPE	1			X	X	(SUB FOR CD14408)
11	T29969	CLAMP	1		- 494726	X	X	
	T29969	CLAMP	2	494727	-	X	X	
12	AR65294	CLAMP	2			X	X	
13	19H218	CAP SCREW	2			X	X	3/8" X 1"
14	H32572	HOSE FITTING	1			X	X	
15	T13254	CLAMP	4			X	X	
16	14H1076	NUT	1	494727	-	X	X	3/8"

COPYRIGHT©1994 - 2008 DEERE & COMPANY Moline, Illinois All rights reserved

(1C23) AIR PRE-CLEANER
PREFILTRE A AIR
LUFTVORFILTER
PREFILTRO ARIA
PREPURIFICADOR DE AIRE
LUFTFOERRENARE

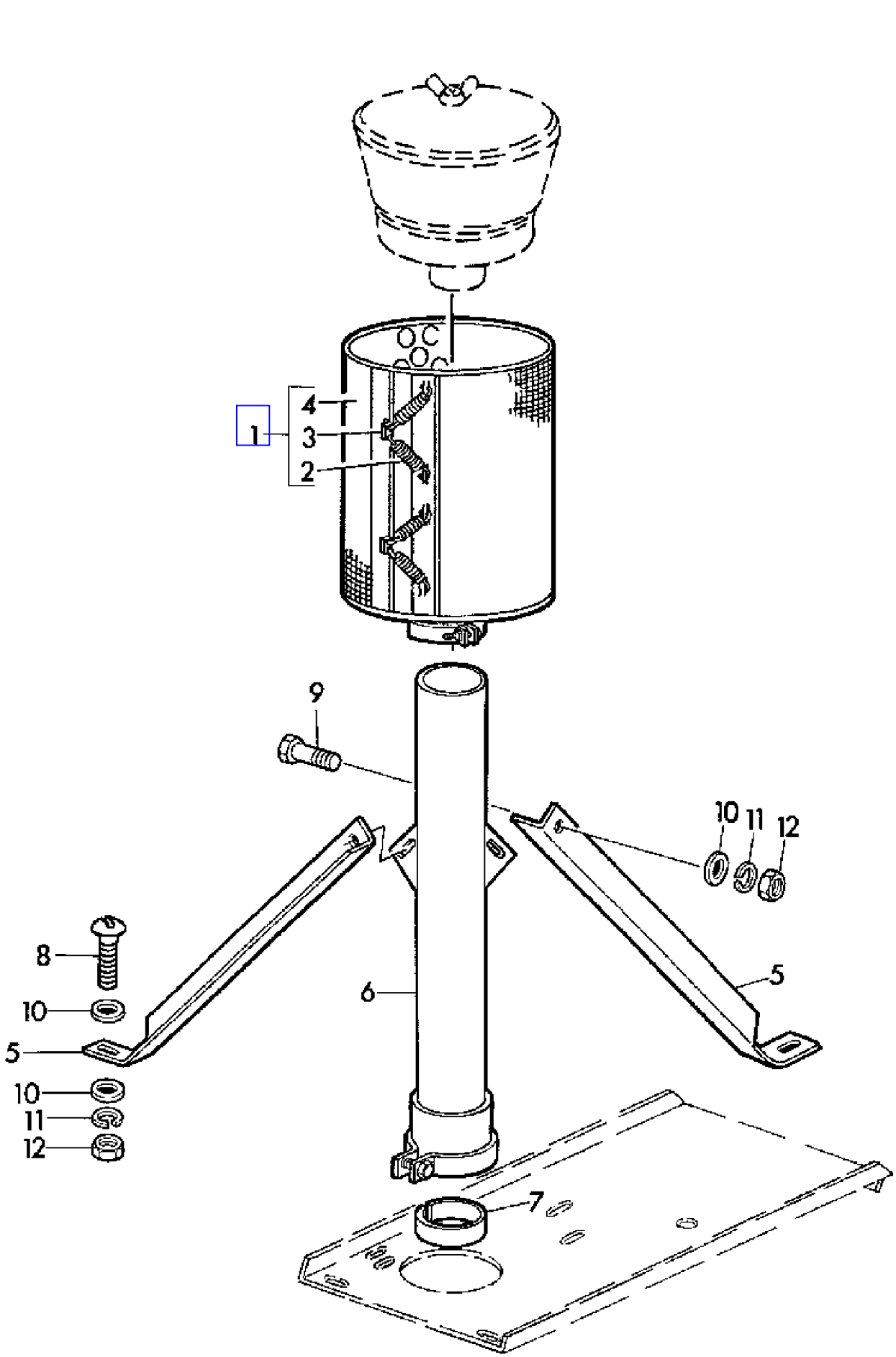

COPYRIGHT©1994 - 2008 DEERE & COMPANY Moline, Illinois All rights reserved

(1C23) AIR PRE-CLEANER
PREFILTRE A AIR
LUFTVORFILTER
PREFILTRO ARIA
PREPURIFICADOR DE AIRE
LUFTFOERRENARE

KEY	PART NO.	PART NAME	QTY	SERIAL NO.		975	975HY/4	REMARKS
1	AR46067	SCREEN	1	-	015187		X	DONALDSON DAH 00-0408, ASSY, INCL KEYS 2,3,4
2	R21644	SPRING	4	-	015187		X	DONALDSON P00-8515 (2)
3	R21645	RETAINER	2	-	015187		X	DONALDSON P00-8516 (2)
4	AR27808	SCREEN	1	-	015187		X	DONALDSON P10-0599
5	Z36757	SUPPORT	2	-	015187		X	
6	AZ25728	PIPE	1	-	015187		X	
7	Z36775	BUSHING	1	-	015187		X	
8	21M7089	SCREW	2	-	015187		X	M8 X 20
9	19M7139	CAP SCREW	2	-	015187		X	M8 X 20
10	24M7036	WASHER	6	-	015187		X	9 MM
11	12M7008	LOCK WASHER	4	-	015187		X	8 MM
12	14M7029	NUT	4	-	015187		X	M8

COPYRIGHT©1994 - 2008 DEERE & COMPANY Moline, Illinois All rights reserved

(1E10) ALTERNATOR
ALTERNATEUR
DREHSTROM-GENERATOR
ALTERNATORE
ALTERNADOR
VAXELSTROMSGENERATOR

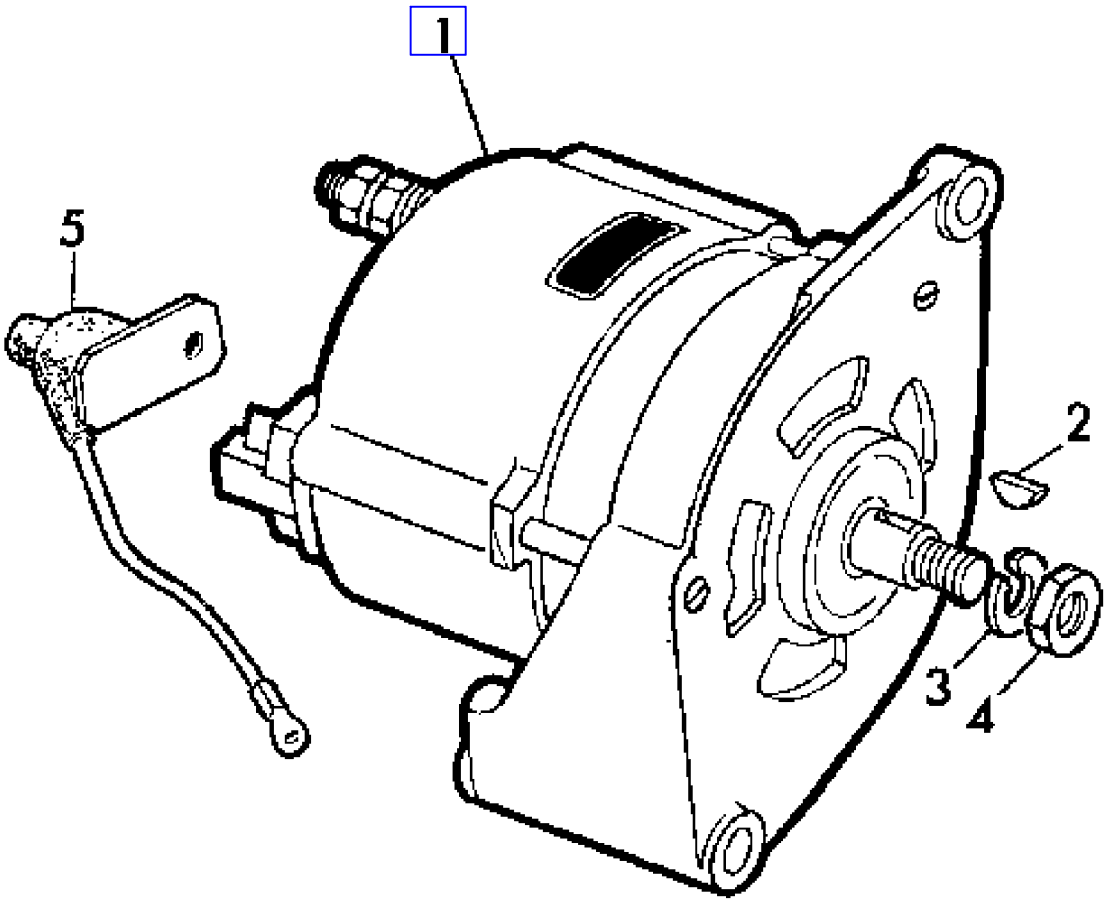

Z 31990

COPYRIGHT©1994 - 2008 DEERE & COMPANY Moline, Illinois All rights reserved

(1E10) ALTERNATOR
ALTERNATEUR
DREHSTROM-GENERATOR
ALTERNATORE
ALTERNADOR
VAXELSTROMSGENERATOR

KEY	PART NO.	PART NAME	QTY	SERIAL NO.		975	975HY/4	REMARKS
1	AZ23575	ALTERNATOR	1		- 015187	X	X	R.BOSCH-14V-33A,0 120 339 512
	AZ26910	ALTERNATOR	1	015188	- XXXX	X	X	R.BOSCH-14V-55A A 120 421 407 ASSY, INCL KEYS 6-9
2	26M4223	SHAFT KEY	1			X	X	4 X 513 MM
3	12M7009	LOCK WASHER	1			X	X	14 MM
4	14M7156	NUT	1			X	X	M14 X 1,5
5	AZ24485	CAPACITOR	1		- 015187	X	X	

COPYRIGHT©1994 - 2008 DEERE & COMPANY Moline, Illinois All rights reserved

(1E16) ALTERNATOR EXPLODED VIEW
ALTERNATEUR ELEMENTS
DREHSTROM-GENERATOR EINZELTEILE
ALTERNATORE PARTI SINGOLE
ALTERNADOR DESPIECE
VAXELSTROMSGENERATOR SPRANGSKISS

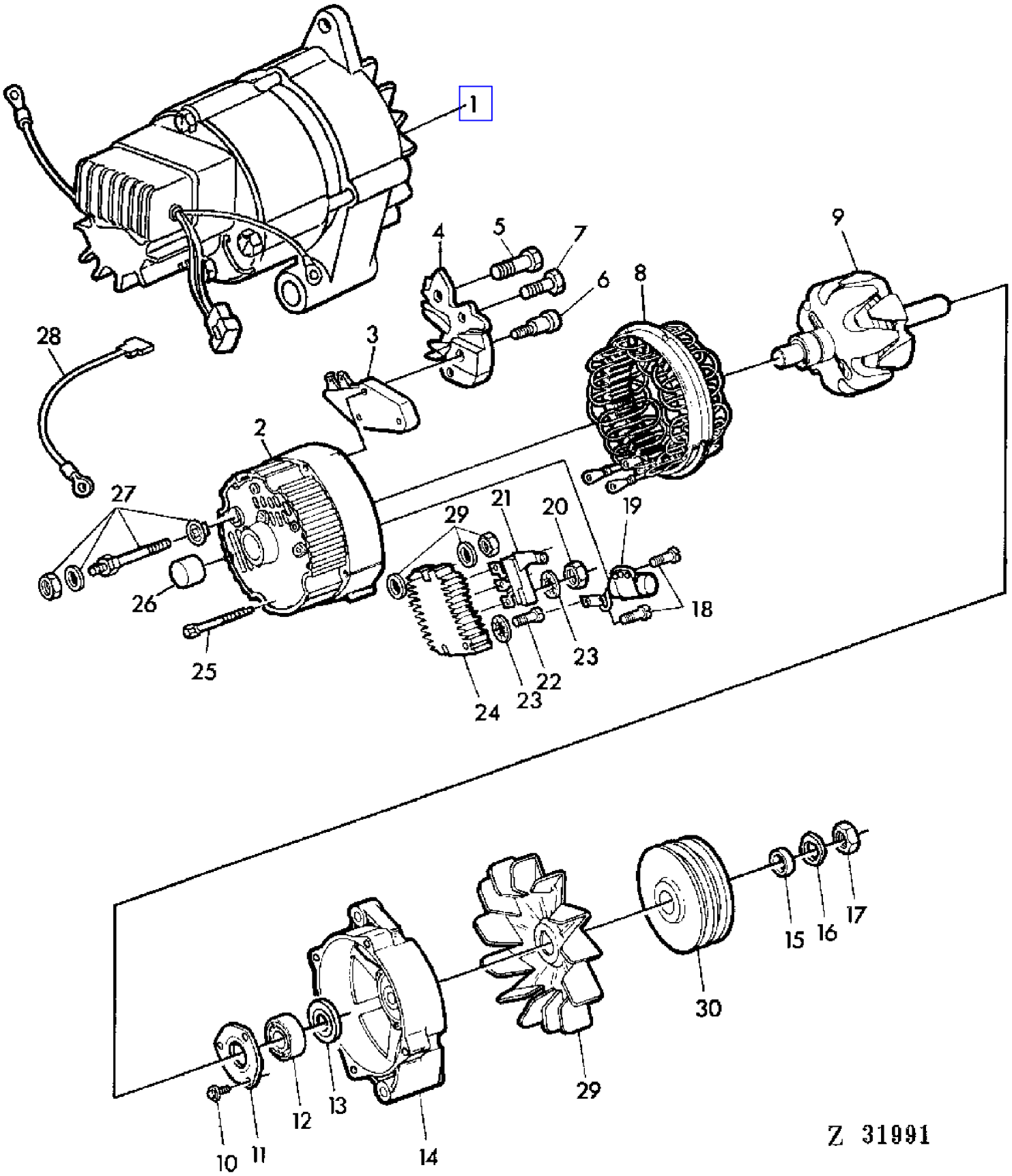

COPYRIGHT©1994 - 2008 DEERE & COMPANY Moline, Illinois All rights reserved

(1E16) ALTERNATOR EXPLODED VIEW
ALTERNATEUR ELEMENTS
DREHSTROM-GENERATOR EINZELTEILE
ALTERNATORE PARTI SINGOLE
ALTERNADOR DESPIECE
VAXELSTROMSGENERATOR SPRANGSKISS

KEY	PART NO.	PART NAME	QTY	SERIAL NO.		975	975HY/4	REMARKS
1	AR93446	ALTERNATOR	1	024598	-	X	X	DELCO-REMY 72A, INCL KEYS 1-28
2	R66301	HOUSING	1	024598	-	X	X	REAR
3	AR55827	VOLTAGE REGULATOR	1	024598	-	X	X	
4	AR85941	CARBON BRUSH HOLDER	1	024598	-	X	X	ASSY
5	21H1376	SCREW	1	024598	-	X	X	NO.8 X 1-1/4"
6	R66302	SCREW	1	024598	-	X	X	
7	R51530	SCREW	2	024598	-	X	X	
8	AR55837	STATOR	1	024598	-	X	X	72AMP
9	AR78093	ROTOR	1	024598	-	X	X	
10	21H1301	SCREW	3	024598	-	X	X	NO.10 X 1/2"
11	AR55836	RETAINER	1	024598	-	X	X	
12	JD9449	BALL BEARING	1	024598	-	X	X	
13	R51534	SHIM	1	024598	-	X	X	
14	R51528	HOUSING	1	024598	-	X	X	FRONT
15	R51533	ECCENTRIC LOCKING COLLAR	1	024598	-	X	X	
16	T10745	WASHER	1	024598	-	X	X	
17	R11049	NUT	1	024598	-	X	X	
18	37H2	SCREW	2	024598	-	X	X	NO.8 X 5/8"
19	AR55835	CAPACITOR	1	024598	-	X	X	
20	14H605	NUT	3	024598	-	X	X	NO.8
21	AR55831	DIODE	1	024598	-	X	X	
22	21H1319	SCREW	1	024598	-	X	X	NO.8 X 7/8"
23	12H290	WASHER	4	024598	-	X	X	NO.8
24	AR55832	RECTIFIER	1	024598	-	X	X	
25	R51535	BOLT	4	024598	-	X	X	
26	AR77851	ROLLER BEARING	1	024598	-	X	X	
27	AR55834	TERMINAL	1	024598	-	X	X	KIT
28	AZ28724	POWER CORD	1	024598	-	X	X	
29	R50659	FAN	1	024598	-	X	X	
30	R52161	PULLEY	1	024598	-	X	X	

COPYRIGHT©1994 - 2008 DEERE & COMPANY Moline, Illinois All rights reserved

(1E12) ALTERNATOR SPARE PARTS 33 AMPS.
ALTERNATEUR,PIECES DETACHEES,33 A
DREHSTROM-GENERATOR-EINZELTEILE 33 A
ALTERNATORE,PARTI SINGOLE,33 A
ALTERNADOR,DESPIECE,33 A
VAEXELSTROMSGENERATOR,SPRANGSKISS,33 A

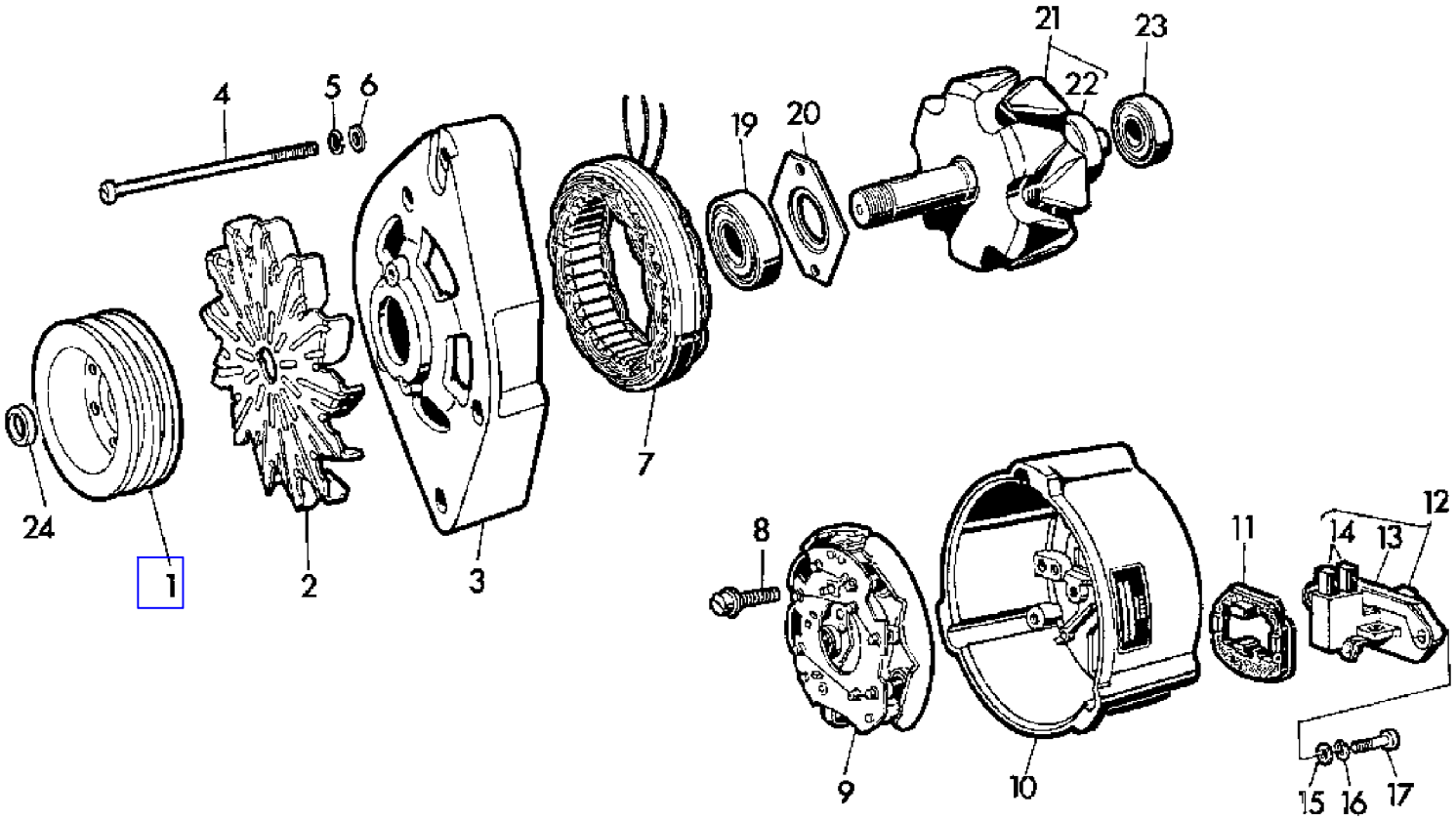

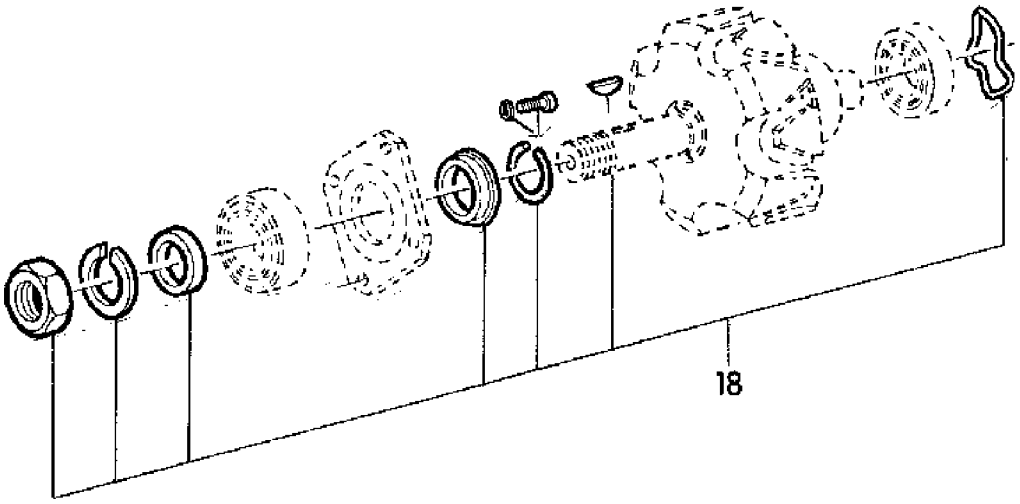

Z 26889

COPYRIGHT©1994 - 2008 DEERE & COMPANY Moline, Illinois All rights reserved

(1E12) ALTERNATOR SPARE PARTS 33 AMPS.
ALTERNATEUR,PIECES DETACHEES,33 A
DREHSTROM-GENERATOR-EINZELTEILE 33 A
ALTERNATORE,PARTI SINGOLE,33 A
ALTERNADOR,DESPIECE,33 A
VAEXELSTROMSGENERATOR,SPRANGSKISS,33 A

KEY	PART NO.	PART NAME	QTY	SERIAL NO.	975	975HY/4	REMARKS
1	Z10966	PULLEY	1		X		(ORD W/ KEY 24)
2	Z29167	PIPE PLUG	1	- 015187	X		
3	L29159	CASE	1	- 015187	X		
4	L32147	SCREW	3	- 015187	X		(SUB FOR L29166)
5	12M7011	LOCK WASHER	3	- 015187	X		5 MM
6	24M7027	WASHER	3	- 015187	X		5,3 MM
7	AZ24487	STATOR	1	- 015187	X		
8	L29163	SCREW	3	- 015187	X		
9	AL27374	RECTIFIER	1	- 015187	X		(SUB FOR AZ24486)
10	AZ24488	CASE	1	- 015187	X		
11	Z35542	INSULATOR	1	- 015187	X		
12	AZ24490	CARBON BRUSH HOLDER	1	- 015187	X		INCL KEYS 13,14
13	L27339	SPRING	2	- 015187	X		
14	AL27373	CARBON BRUSH CONDUCTOR	1	- 015187	X		KIT
15	L29162	WASHER	2	- 015187	X		
16	12M1622	LOCK WASHER	2	- 015187	X		4 MM
17	AL19208	SCREW	2	- 015187	X		
18	AL23857	KIT	1	- 015187	X		
19	AL23852	BEARING	1	- 015187	X		
20	L29161	PLATE	1	- 015187	X		
21	AZ24489	ROTOR	1	- 015187	X		INCL KEY 22
22	L29160	RING	1	- 015187	X		
23	AL23851	BEARING	1	- 015187	X		
24	Z32101	WASHER	1	- 015187	X		

COPYRIGHT©1994 - 2008 DEERE & COMPANY Moline, Illinois All rights reserved

(1E14) ALTERNATOR SPARE PARTS,55 AMPS.
ALTERNATEUR,PIECES DETACHEES,55 A
DREHSTROM-GENERATOR-EINZELTEILE 55 A
ALTERNATORE,PARTI SINGOLE,55 A
ALTERNADOR,DESPIECE,55 A
VAEXELSTROMSGENERATOR,SPRANGSKISS,55 A

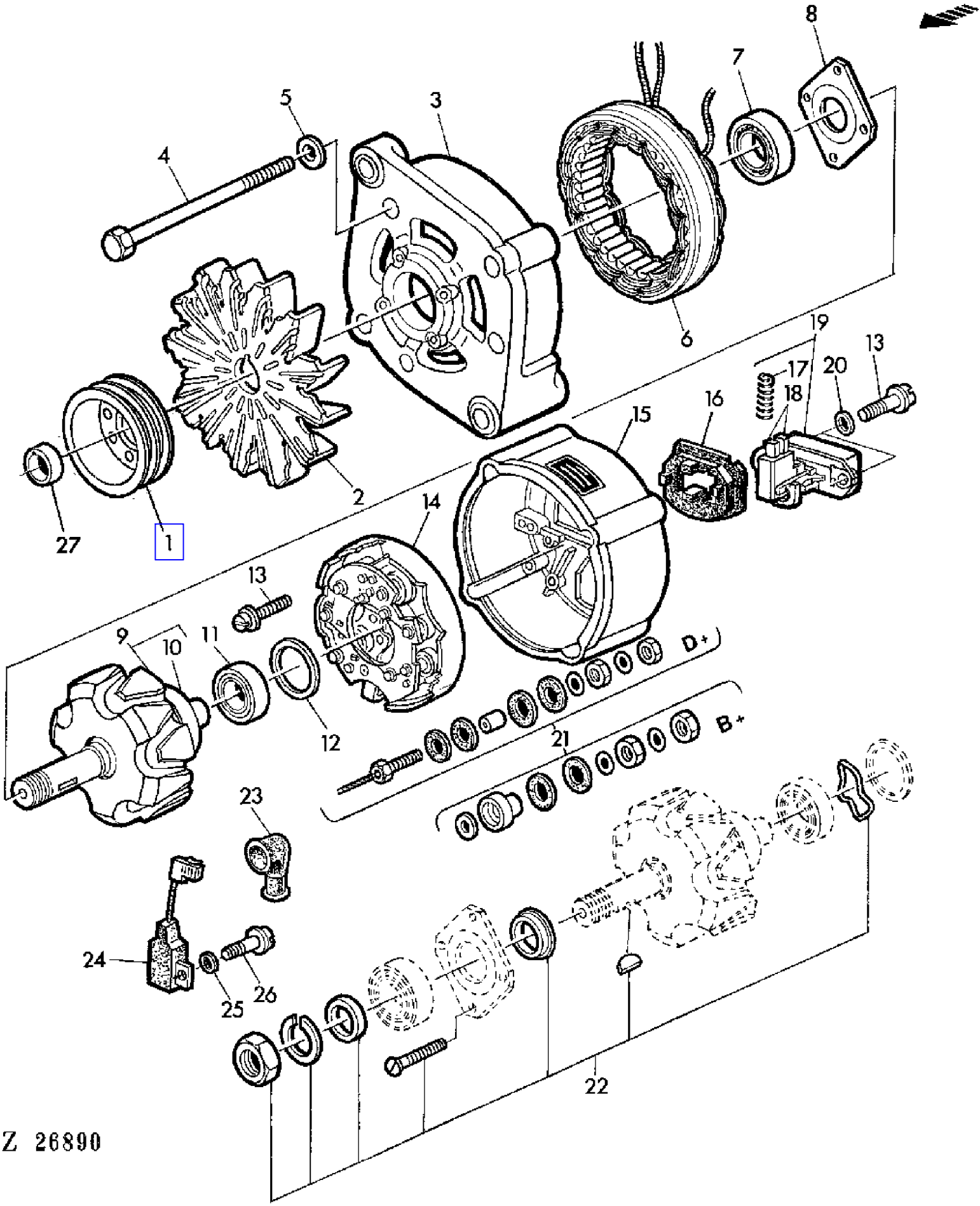

COPYRIGHT©1994 - 2008 DEERE & COMPANY Moline, Illinois All rights reserved

(1E14) ALTERNATOR SPARE PARTS,55 AMPS.
ALTERNATEUR,PIECES DETACHEES,55 A
DREHSTROM-GENERATOR-EINZELTEILE 55 A
ALTERNATORE,PARTI SINGOLE,55 A
ALTERNADOR,DESPIECE,55 A
VAEXELSTROMSGENERATOR,SPRANGSKISS,55 A

KEY	PART NO.	PART NAME	QTY	SERIAL NO.			975 HY 5 4	REMARKS
1	Z10966	PULLEY	1	015188	-	024597	X X	
2	L33993	FAN	1	015188	-	024597	X X	
3	AL30414	CASE	1	015188	-	024597	X X	
4	21M7241	SCREW	4	015188	-	024597	X X	M5 X 110
5	24M7027	WASHER	4	015188	-	024597	X X	5,3 X 10 X 1 MM
6	AL30422	STATOR	1	015188	-	024597	X X	
7	JD10036	BALL BEARING	1	015188	-	024597	X X	
8	L33985	FLANGE	1	015188	-	024597	X X	R.BOSCH-1 121 038 005
9	AL30416	ROTOR	1	015188	-	024597	X X	INCL KEY 10
10	L33986	RING	1	015188	-	024597	X X	
11	AL30417	BEARING	1	015188	-	024597	X X	
12	L33987	O-RING	1	015188	-	024597	X X	M4 X 16
13	21M7242	SCREW	3	015188	-	024597	X X	M4 X 16
14	AL30419	DIODE HOLDER	1	015188	-	024597	X X	
15	AL30418	HOUSING	1	015188	-	024597	X X	
16	L33992	INSULATOR	1	015188	-	024597	X X	
17	L33988	SPRING	2	015188	-	024597	X X	
18	AL30421	CARBON BRUSH CONDUCTOR	1	015188	-	024597	X X	KIT
19	AL30420	REGULATOR	1	015188	-	024597	X X	
20	12M7031	LOCK WASHER	2	015188	-	024597	X X	4 MM
21	AL30425	KIT	1	015188	-	024597	X X	KIT
22	AL30424	SEAL KIT	1	015188	-	024597	X X	KIT
23	L33994	TERMINAL NIPPLE	2	015188	-	024597	X X	
24	AL30423	CAPACITOR	1	015188	-	024597	X X	
25	12M7075	WASHER	1	015188	-	024597	X X	5 MM
26	21M7198	SCREW	1	015188	-	024597	X X	M5 X 10
27	Z32101	WASHER	1	015188	-	024597	X X	

COPYRIGHT©1994 - 2008 DEERE & COMPANY Moline, Illinois All rights reserved

(4C17) ANTI-WRAP GUARD-CROSS SHAKER
PLAQUE ANTIENROULEMENT-SECOUEUR ROTATIF
WICKELSCHUTZ-QUERSCHUETTLER
PROTEZIONE ANTI-AVVOLGIMENTO DEL SCUOTITORE-INCROCIATO
CHAPAS DE DEFENSA CONTRA EL ARROLLAMIENTO-SACUDIDOR TRANSV.
TVARSKAKARENS LINDNINGSSKYDD

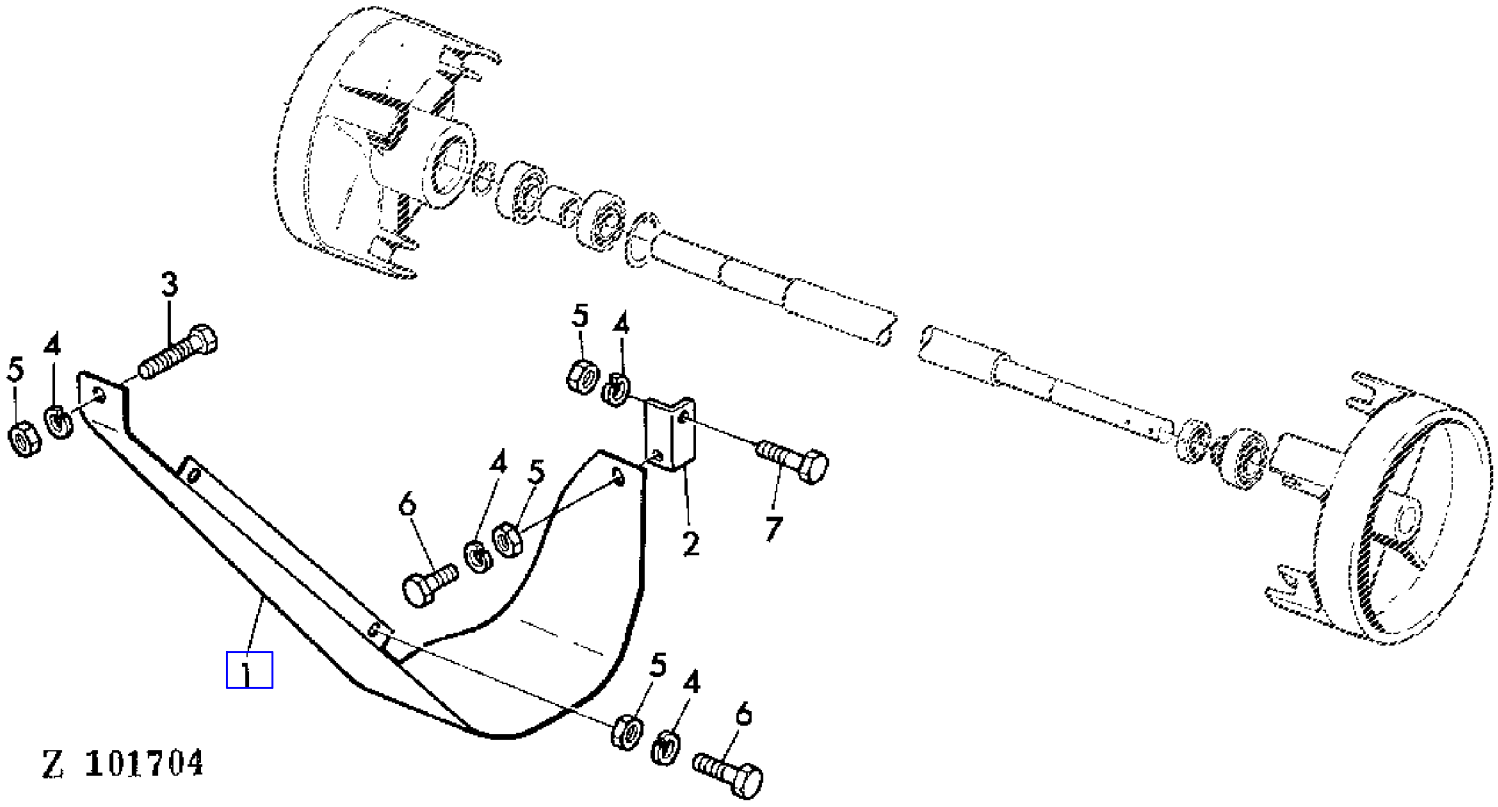

COPYRIGHT©1994 - 2008 DEERE & COMPANY Moline, Illinois All rights reserved

(4C17) ANTI-WRAP GUARD-CROSS SHAKER
PLAQUE ANTIENROULEMENT-SECOUEUR ROTATIF
WICKELSCHUTZ-QUERSCHUETTLER
PROTEZIONE ANTI-AVVOLGIMENTO DEL SCUOTITORE-INCROCIATO
CHAPAS DE DEFENSA CONTRA EL ARROLLAMIENTO-SACUDIDOR TRANSV.
TVARSKAKARENS LINDNINGSSKYDD

KEY	PART NO.	PART NAME	QTY	SERIAL NO.	975	975HY/4	REMARKS
1	AZ22014	DEFLECTOR	1		X	X	LH, AR
	AZ22013	DEFLECTOR	1		X	X	RH, AR
2	Z33068	ANGLE	1		X	X	LH, AR
	Z33067	ANGLE	1		X	X	RH, AR
3	19M7284	CAP SCREW	2		X	X	M8 X 18
4	12M7008	LOCK WASHER	AR		X	X	8 MM
5	14M7029	NUT	AR		X	X	M8
6	19M7297	CAP SCREW	AR		X	X	M8 X 12
7	19M7162	CAP SCREW	1		X	X	M8 X 15

COPYRIGHT©1994 - 2008 DEERE & COMPANY Moline, Illinois All rights reserved

(1E09) ATTACHING PARTS-ALTERNATOR
PIECES DE SUPPORT-ALTERNATEUR
HALTER-DREHSTROM-GENERATOR
SUPPORTI DEL ALTERNATOR
SOPORTES DEL ALTERNADOR
MONTERINGSDELAR FOR VAXELSTROMSGENERATOR

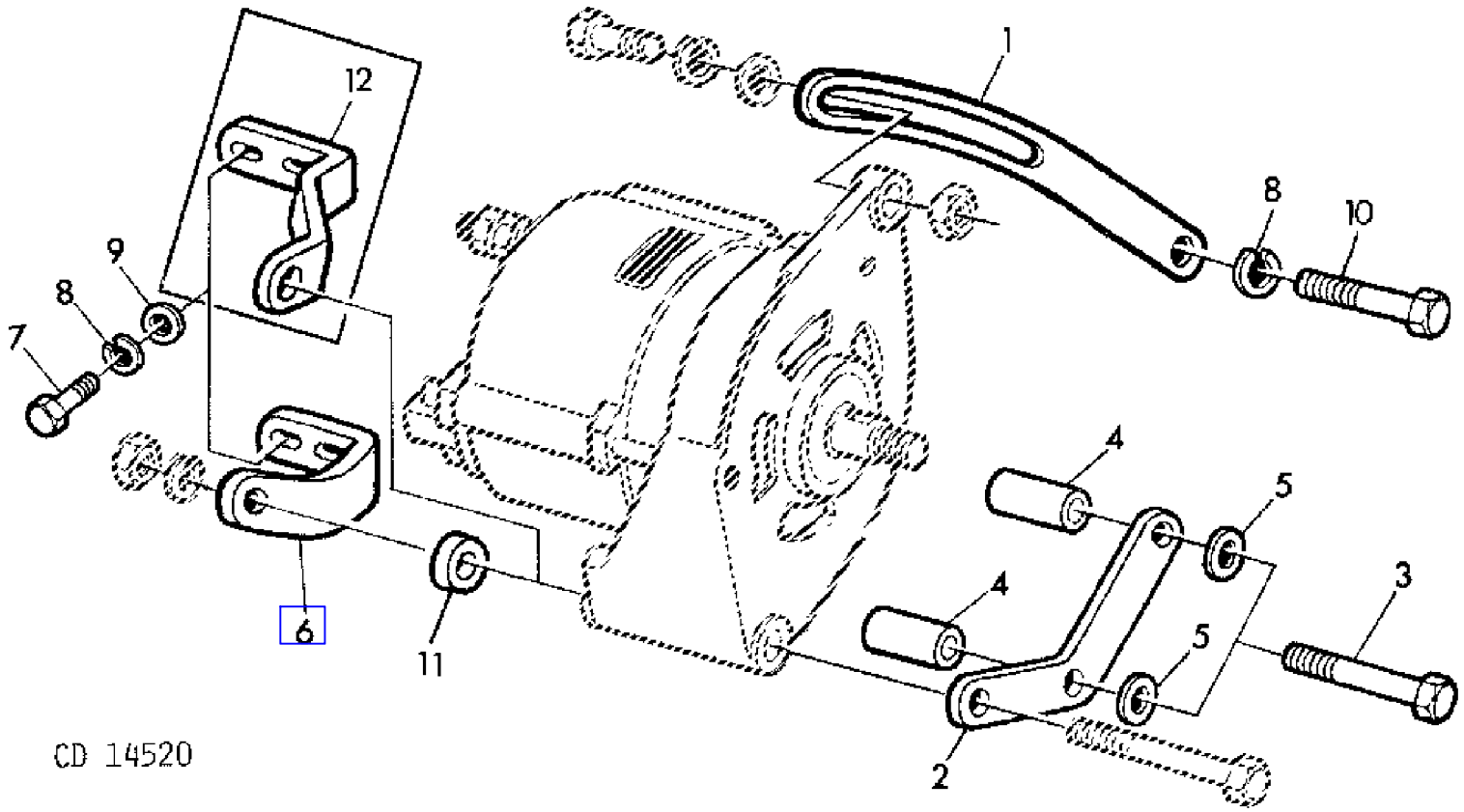

COPYRIGHT©1994 - 2008 DEERE & COMPANY Moline, Illinois All rights reserved

(1E09) ATTACHING PARTS-ALTERNATOR
PIECES DE SUPPORT-ALTERNATEUR
HALTER-DREHSTROM-GENERATOR
SUPPORTI DEL ALTERNATOR
SOPORTES DEL ALTERNADOR
MONTERINGSDELAR FOR VAXELSTROMSGENERATOR

KEY	PART NO.	PART NAME	QTY	SERIAL NO.		975	975HY/4	REMARKS
1	T20204	STRAP	1		- 389082	X		
	T32853	STRAP	1	389083	-	X	X	
2	R60827	SUPPORT	1		- 389082	X		
	R68751	BRACKET	1	389083	-	X	X	
3	19H2128	CAP SCREW	2			X	X	3/8" X 3"
4	R64449	BUSHING	2			X	X	
5	24H1304	WASHER	2			X	X	13/32" X 23/32" X .120"
6	R68752	BRACKET	1	389083	-	X	X	
7	19H2284	CAP SCREW	2			X	X	3/8" X 7/8"
8	12H304	LOCK WASHER	3			X	X	3/8"
9	24H1305	WASHER	2			X	X	13/32" X 13/16" X .060"
10	19H1819	CAP SCREW	1			X	X	3/8" X 2-1/8"
11	CD14689	SPACER	1			X	X	(SUB FOR CD14237)
12	R60828	BRACKET	1		- 389082	X		

COPYRIGHT©1994 - 2008 DEERE & COMPANY Moline, Illinois All rights reserved

(2E21) AXLE SUPPORT
SUPPORT D'ESSIEU
ACHSVERSTREBUNG
SUPPORTO D'ASSALE
SOPORTE DEL EJE
AXELFASTE

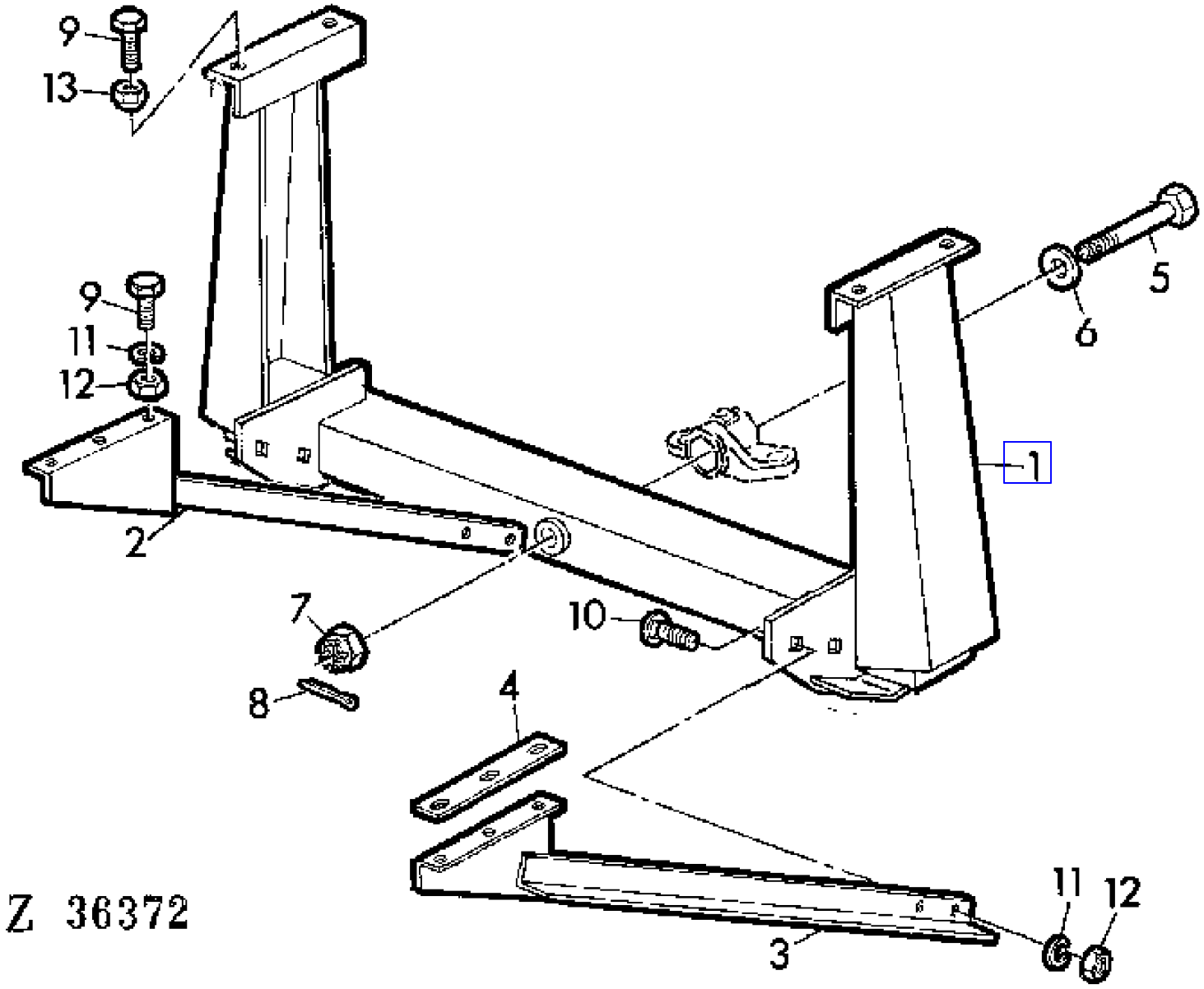

COPYRIGHT©1994 - 2008 DEERE & COMPANY Moline, Illinois All rights reserved

(2E21) AXLE SUPPORT
SUPPORT D'ESSIEU
ACHSVERSTREBUNG
SUPPORTO D'ASSALE
SOPORTE DEL EJE
AXELFASTE

KEY	PART NO.	PART NAME	QTY	SERIAL NO.	975	975HY/4	REMARKS
1	AZ20379	CROSSBAR	1		X	X	
2	AZ20377	BRACE	1		X	X	RH
3	AZ20376	BRACE	1		X	X	LH
4	Z34017	PLATE	1		X	X	
5	Z31728	CAP SCREW	1		X	X	20 X 190 MM
6	Z26239	WASHER	1		X	X	
7	14M7211	NUT	AR		X	X	M20
8	11M7024	COTTER PIN	AR		X	X	4 X 40 MM
9	19M7169	CAP SCREW	10		X	X	M10 X 35
10	03M7084	BOLT	4		X	X	M10 X 25
11	12M7013	LOCK WASHER	AR		X	X	10 MM
12	14M7140	NUT	AR		X	X	M10
13	14M7167	LOCK NUT	AR		X	X	M10

COPYRIGHT©1994 - 2008 DEERE & COMPANY Moline, Illinois All rights reserved

(1E08) BATTERY
BATTERIE
BATTERIE
BATTERIA
BATERIA
BATTERI

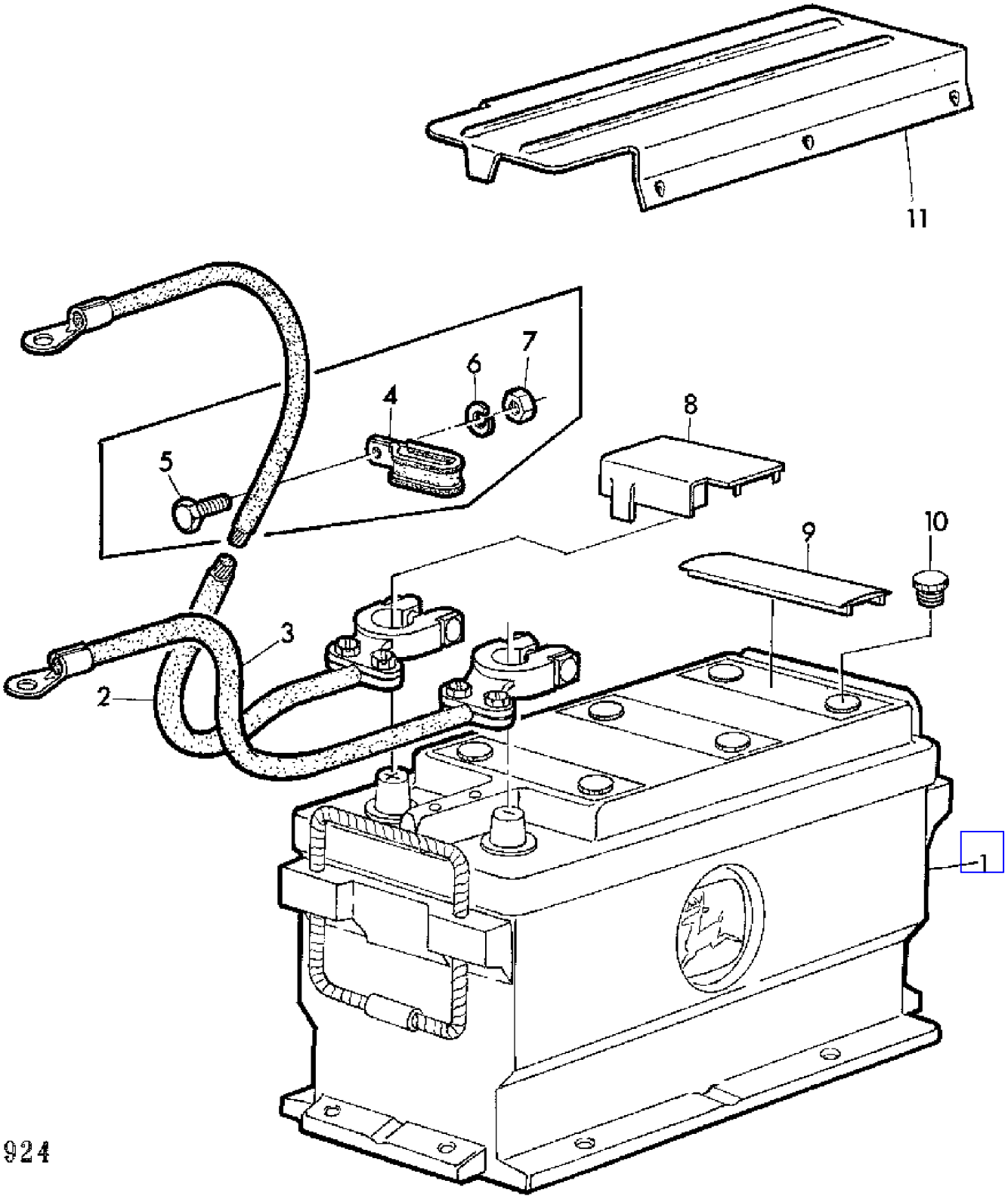

COPYRIGHT©1994 - 2008 DEERE & COMPANY Moline, Illinois All rights reserved

(1E08) BATTERY
BATTERIE
BATTERIE
BATTERIA
BATERIA
BATTERI

KEY	PART NO.	PART NAME	QTY	SERIAL NO.	975	975HY	REMARKS
1	AZ27734	BATTERY	1		X	X	12V 110AH 490A, INCL KEYS 8,9 (SUB FOR AL27257)
2	AZ37147	GROUND CABLE	1		X	X	(SUB FOR AZ23571)
3	AZ37147	GROUND CABLE	1		X	X	(SUB FOR AZ23572, AZ25668)
4	Z35202	CLAMP	AR	- 022078	X	X	
5	19M7160	CAP SCREW	AR	- 022078	X	X	M6 X 30
6	12M7012	LOCK WASHER	AR	- 022078	X	X	6 MM
7	14M7027	NUT	AR	- 022078	X	X	M6
8	Z38600	COVER	1		X	X	(SUB FOR T42096)
9	L31256	COVER	3		X	X	
10	Z35198	PLUG	AR		X	X	
11	Z41858	COVER	1		X	X	

COPYRIGHT©1994 - 2008 DEERE & COMPANY Moline, Illinois All rights reserved

(2F13) BATTERY BOX
FIXATION DE BATTERIE
BATTERIEHALTER
SUPPORTO DI BATTERIA
SOPORTE PARA LA BATERIA
BATTERILADA

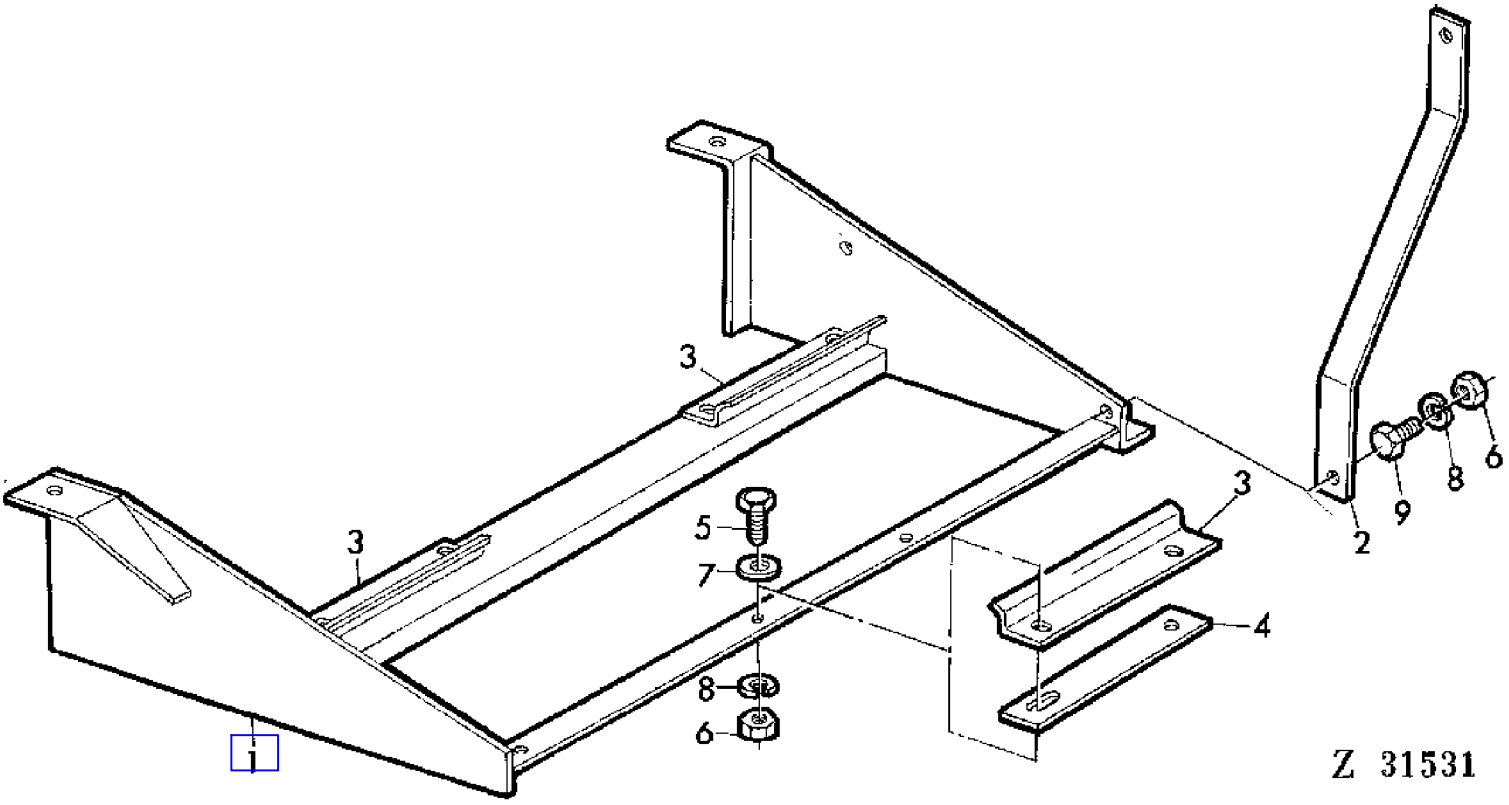

COPYRIGHT©1994 - 2008 DEERE & COMPANY Moline, Illinois All rights reserved

(2F13) BATTERY BOX
FIXATION DE BATTERIE
BATTERIEHALTER
SUPPORTO DI BATTERIA
SOPORTE PARA LA BATERIA
BATTERILADA

KEY	PART NO.	PART NAME	QTY	SERIAL NO.	975	975HY/4	REMARKS
1	AZ23784	HOLDER	1		X	X	
2	Z34732	BRACE	1		X	X	
3	Z32841	RETAINER	3		X	X	
4	Z34733	PLATE	1		X	X	
5	19M7139	CAP SCREW	AR		X	X	M8 X 20
6	14M7029	NUT	AR		X	X	M8
7	24M7036	WASHER	AR		X	X	9 MM
8	12M7008	LOCK WASHER	AR		X	X	8 MM
9	19M7284	CAP SCREW	AR		X	X	M8 X 8

COPYRIGHT©1994 - 2008 DEERE & COMPANY Moline, Illinois All rights reserved

(3F22) BEARING BRACKET,LEFT-HAND
SUPPORT DE PALIER GAUCHE
LAGERHALTER LINKS
SUPPORTO DI CUSCINETTO SINISTRO
SOPORTE IZQUIERDO PARA EL COJINETE DE APOYO
LAGERFASTE,VANSTER

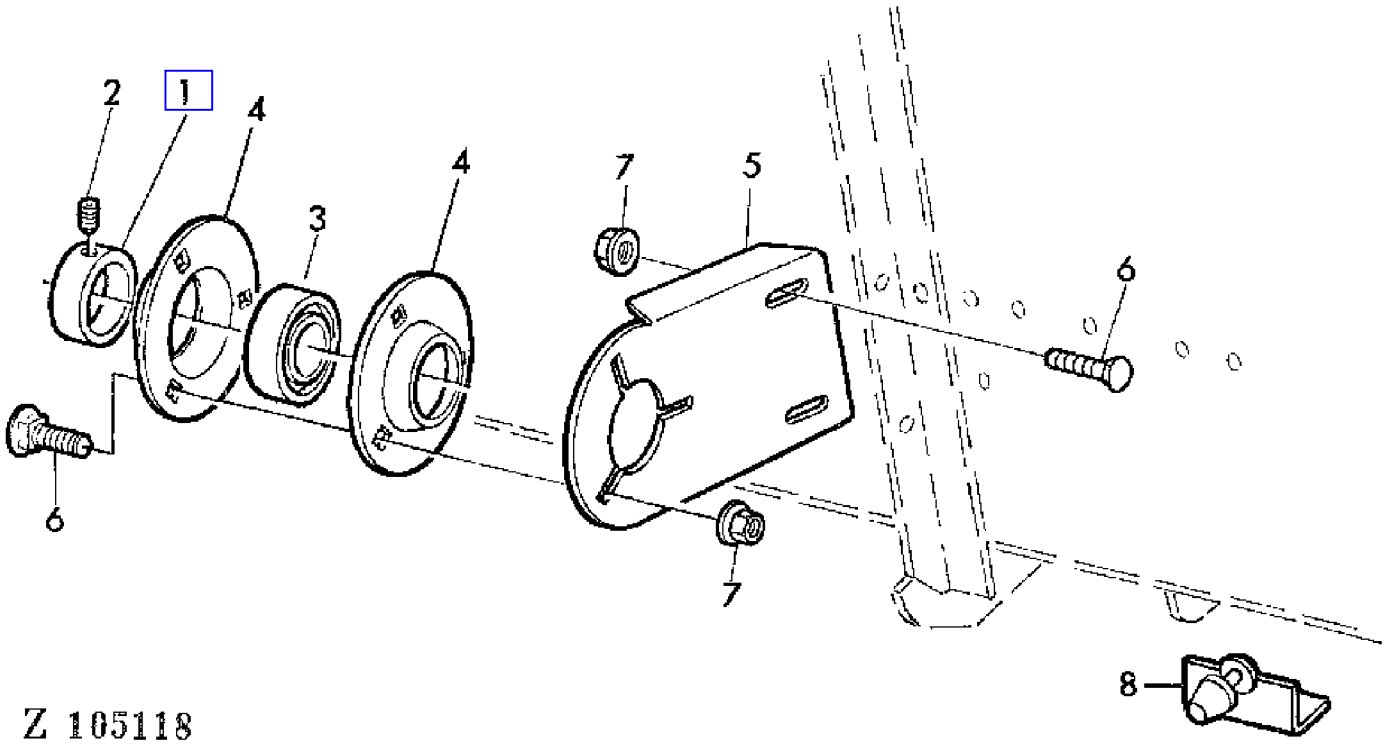

COPYRIGHT©1994 - 2008 DEERE & COMPANY Moline, Illinois All rights reserved

(3F22) BEARING BRACKET,LEFT-HAND
SUPPORT DE PALIER GAUCHE
LAGERHALTER LINKS
SUPPORTO DI CUSCINETTO SINISTRO
SOPORTE IZQUIERDO PARA EL COJINETE DE APOYO
LAGERFASTE,VANSTER

KEY	PART NO.	PART NAME	QTY	SERIAL NO.	975	975HY/4	REMARKS
1	JD8544	ECCENTRIC LOCKING COLLAR	1		X	X	
2	.....	BOLT	1		X	X	5/16" X 5/16"
3	JD9274	BALL BEARING	1		X	X	
4	C3056E	PRESSED FLANGED HOUSING	2		X	X	
5	H87583	BRACKET	1		X	X	(A)
6	03H1765	BOLT	5		X	X	3/8" X 3/4"
7	N10215	LOCK NUT	5		X	X	
8	AZ34942	HOLDER	2		X	X	AR (SUB FOR AZ25088)

(A) WITH 18' CUTTING PLATFORM ONLY
UNIQUEMENT POUR PLATES-FORMES DE COUPE DEPASSANT 18'
NUR BEI SCHNEIDWERKEN UEBER 18'
SOLO PER PIATTAFORME DI TAGLIO DA PIU DI 18'
SOLO PARA PLATAFORMAS DE CORTE A PARTIR DE 18'
ENDAST FOR SKARBORD AVER 18'

COPYRIGHT©1994 - 2008 DEERE & COMPANY Moline, Illinois All rights reserved

(4B02) BEATER
TIRE-PAILLE
WENDETROMMEL
LANCIAPAGLIA
BATIDOR
HALMVINDA

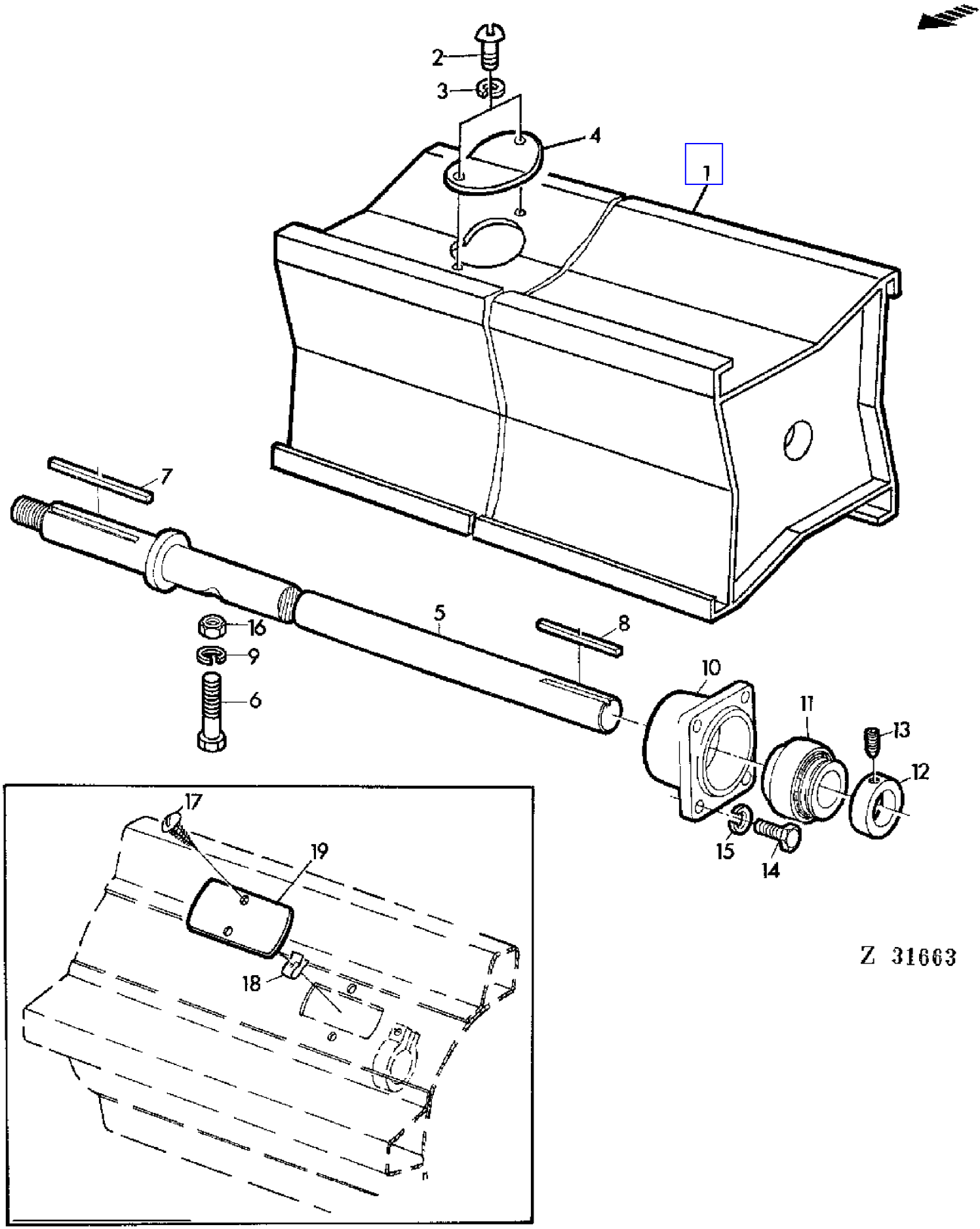

COPYRIGHT©1994 - 2008 DEERE & COMPANY Moline, Illinois All rights reserved

(4B02) BEATER
TIRE-PAILLE
WENDETROMMEL
LANCIAPAGLIA
BATIDOR
HALMVINDA

KEY	PART NO.	PART NAME	QTY	SERIAL NO.	9 7 5	9 7 5 H Y 4	REMARKS
1	AZ20898	BEATER	1		X	X	INCL KEYS 2-4,6,9,16
2	21M7091	SCREW	2		X	X	M8 X 12
3	12M7008	LOCK WASHER	2		X	X	8 MM
4	Z30879	COVER	1		X	X	
5	AZ20541	SHAFT	1		X	X	
6	19M7495	CAP SCREW	1		X	X	M16 X 100
7	49M7019	SHAFT KEY	1		X	X	12 X 8 X 180 MM
8	49M7018	SHAFT KEY	1		X	X	12 X 8 X 140 MM
9	12M7017	LOCK WASHER	1		X	X	16 MM
10	Z11331	HOUSING	2		X	X	(SUB FOR Z11118)
11	AZ19432	BALL BEARING	2		X	X	
12	AZ20539	ECCENTRIC LOCKING COLLAR	2		X	X	INCL KEY 13
13	AZ19845	SET SCREW	2		X	X	10 X 10 MM
14	19M7285	CAP SCREW	8		X	X	M12 X 30
15	12M7014	LOCK WASHER	8		X	X	12 MM
16	14M7142	NUT	1		X	X	M16
17	37M7009	SCREW	2	- 012311	X		5,5 X 19 MM
18	Z20443	NUT	2	- 012311	X		
19	Z34285	COVER	1	- 012311	X		

COPYRIGHT©1994 - 2008 DEERE & COMPANY Moline, Illinois All rights reserved

(2C05) BRAKE CYLINDER
CYLINDRE DE FREIN
BREMSZYLINDER
CILINDRO SECONDARIO FRENI
BOMBA DE FRENOS
BROMSCYLINDER

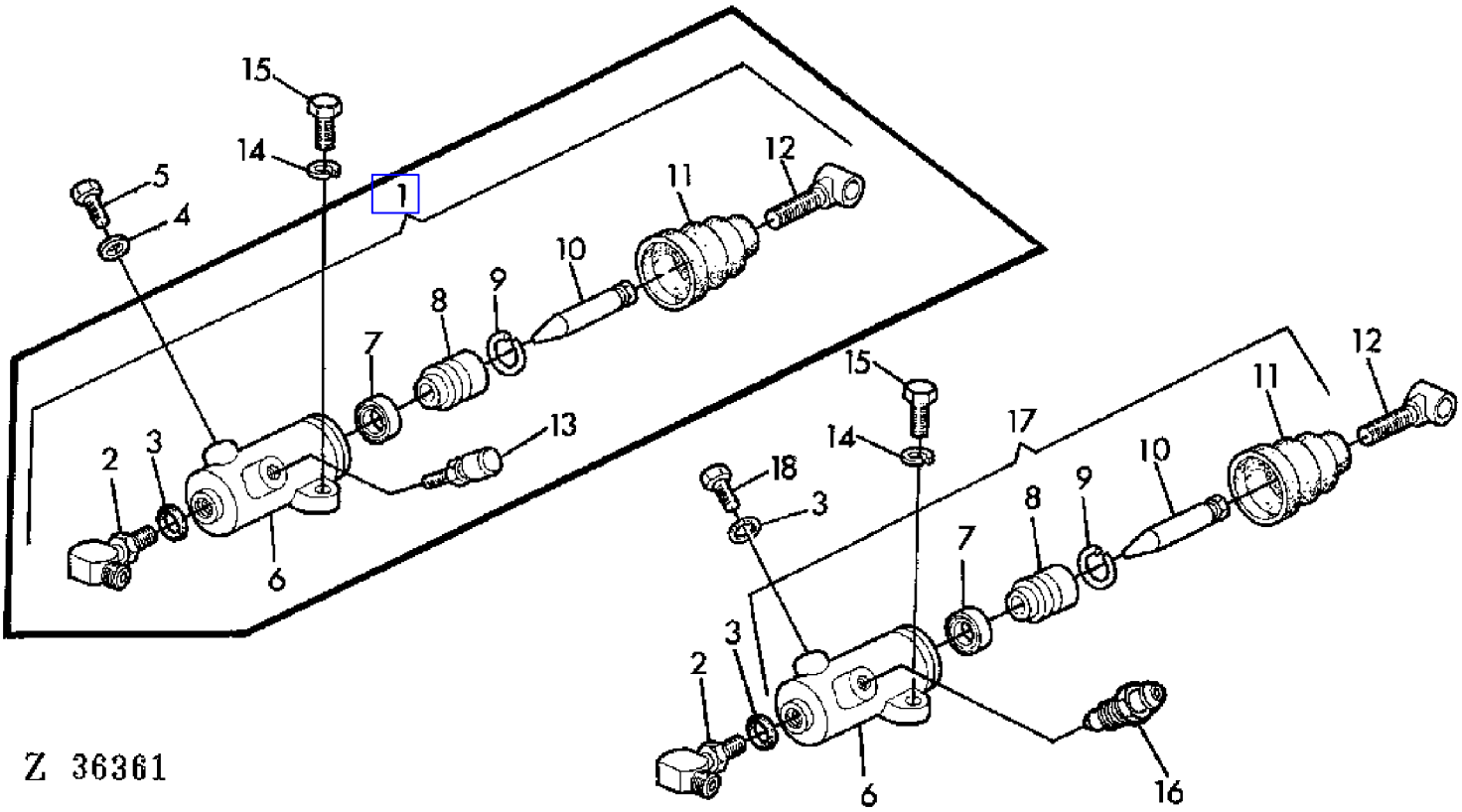

COPYRIGHT©1994 - 2008 DEERE & COMPANY Moline, Illinois All rights reserved

(2C05) BRAKE CYLINDER
CYLINDRE DE FREIN
BREMSZYLINDER
CILINDRO SECONDARIO FRENI
BOMBA DE FRENOS
BROMSCYLINDER

KEY	PART NO.	PART NAME	QTY	SERIAL NO.	975	975HY/4	REMARKS
1	AZ18762	HYDRAULIC CYLINDER	1		X	X	LH, INCL KEYS 2-13 (ORD AZ30204 W/ AR26746, R21612, (2) R26287, 730222)
	AZ18763	HYDRAULIC CYLINDER	1		X	X	RH, INCL KEYS 2-13 (ORD AZ30204 W/ AR26746, R21612, (2) R26287, Z30222)
2	AR26746	ELBOW FITTING	2		X	X	
3	R26287	O-RING	2		X	X	
4	51M4229	RING	2		X	X	
5	Z30220	CAP SCREW	2		X	X	
6	.....	ANGLE BLADE CYLINDER	2		X	X	NSEP
7	Z30217	SEAL	2		X	X	
8	.....	PISTON	2		X	X	NSEP
9	40M6219	SNAP RING	2		X	X	22 MM
10	Z30218	PLUNGER	2		X	X	
11	Z30219	BOOT	2		X	X	
12	Z30222	EYEBOLT	2		X	X	
13	AL37521	BLEED VALVE	2		X	X	(SUB FOR Z30221)
14	12M7008	LOCK WASHER	4		X	X	8 MM
15	19H1905	CAP SCREW	4		X	X	5/16" X 1"
16	R21612	BLEED SCREW	2		X	X	
17	AZ30204	HYDRAULIC CYLINDER	2		X	X	INCL KEYS 6-11
18	R31631	DRAIN PLUG	2		X	X	

COPYRIGHT©1994 - 2008 DEERE & COMPANY Moline, Illinois All rights reserved

(2C02) BRAKE VALVE
MAITRE-CYLINDRE DE FREIN
BREMSVENTIL
CILINDRO MAESTRO FRENI
VALVULA DE MANDO DEL FRENO
BROMSVENTIL

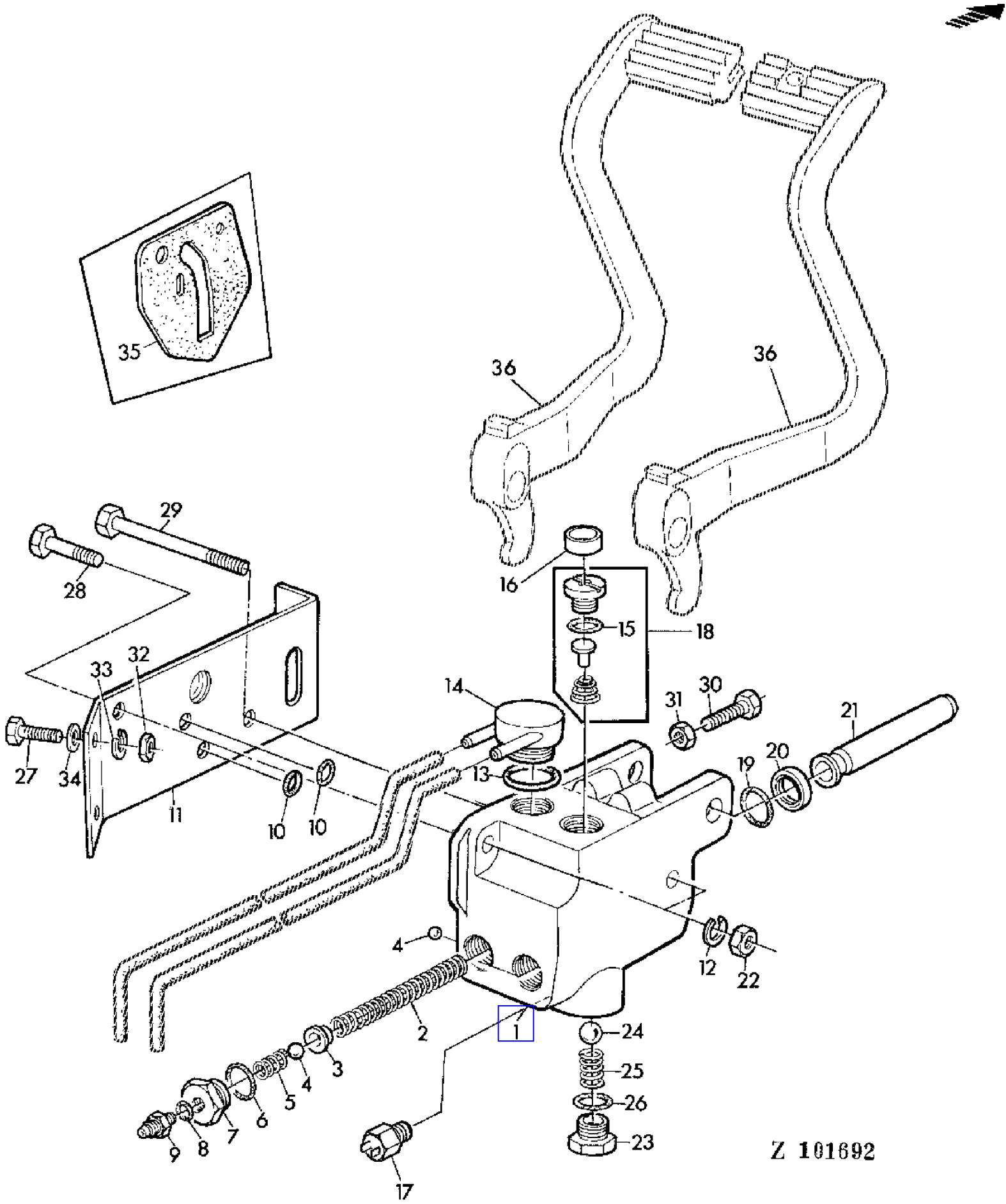

COPYRIGHT©1994 - 2008 DEERE & COMPANY Moline, Illinois All rights reserved

(2C02) BRAKE VALVE
MAITRE-CYLINDRE DE FREIN
BREMSVENTIL
CILINDRO MAESTRO FRENI
VALVULA DE MANDO DEL FRENO
BROMSVENTIL

KEY	PART NO.	PART NAME	QTY	SERIAL NO.		975	975HY	REMARKS
1	AR63616	HOUSING	1			X	X	
2	R50112	SPRING	2			X	X	
3	T21815	RETAINER	2			X	X	
4	400R	BALL	3			X	X	
5	T21814	SPRING	2			X	X	
6	F3171R	O-RING	2			X	X	
7	R50110	FITTING	2			X	X	
8	R26287	O-RING	2			X	X	
9	R27139	FITTING	2			X	X	
10	R62513	O-RING	2	012312	-	X	X	
11	Z30213	BRACKET	1		- 012311	X		(ORD Z36749 W/ (2) R62513)
	Z36749	BRACKET	1	012312	-	X	X	
12	12M7014	LOCK WASHER	2			X	X	12 MM
13	A4730R	O-RING	1			X	X	
14	AZ21028	ADAPTER	1			X	X	INCL KEY 13 (SUB FOR Z30209)
15	R26906	O-RING	1			X	X	
16	R35286	CAP	1			X	X	
17	AL27809	SWITCH	1			X	X	(SUB FOR AL17696)
18	AL23836	CHECK VALVE	1			X	X	ASSY
19	R495R	O-RING	2			X	X	
20	T22101	SEAL	2			X	X	
21	R50111	PISTON	2		- 013543	X		(ORD (2) L34040)
	L34040	PISTON	2	013544	-	X	X	(SUB FOR L31840)
22	14M7015	NUT	2			X	X	M12
23	R39112	FITTING	1			X	X	
24	D2361R	BALL	1			X	X	
25	T21816	SPRING	1			X	X	
26	R26375	O-RING	1			X	X	
27	19M7139	CAP SCREW	2			X	X	M8 X 12
28	19M7387	CAP SCREW	1			X	X	M12 X 40
29	19M7415	CAP SCREW	1			X	X	M12 X 130
30	L32504	CAP SCREW	2			X	X	3/8" X 1-1/4" (SUB FOR 19H1732)
31	14H342	NUT	2			X	X	3/8"
32	14M7014	NUT	2			X	X	M8
33	12M7008	LOCK WASHER	2			X	X	8 MM
34	24M7036	WASHER	2			X	X	9 MM
35	T30687	GASKET	1		- 012311	X		
36	.....	PEDAL	2			X	X	SECTION 60

COPYRIGHT©1994 - 2008 DEERE & COMPANY Moline, Illinois All rights reserved

(3C20) CAB HEATING-STANDARD CAB
CHAUFFAGE-CABINE STANDARD
KABINENHEIZUNG-STANDARD-KABINE
RISCALDAMENTO-CABINA STANDARD
CALEFACCION DE LA CABINA-CABINA STANDARD
HYTTVARMARE-STANDARD FORARHYTT

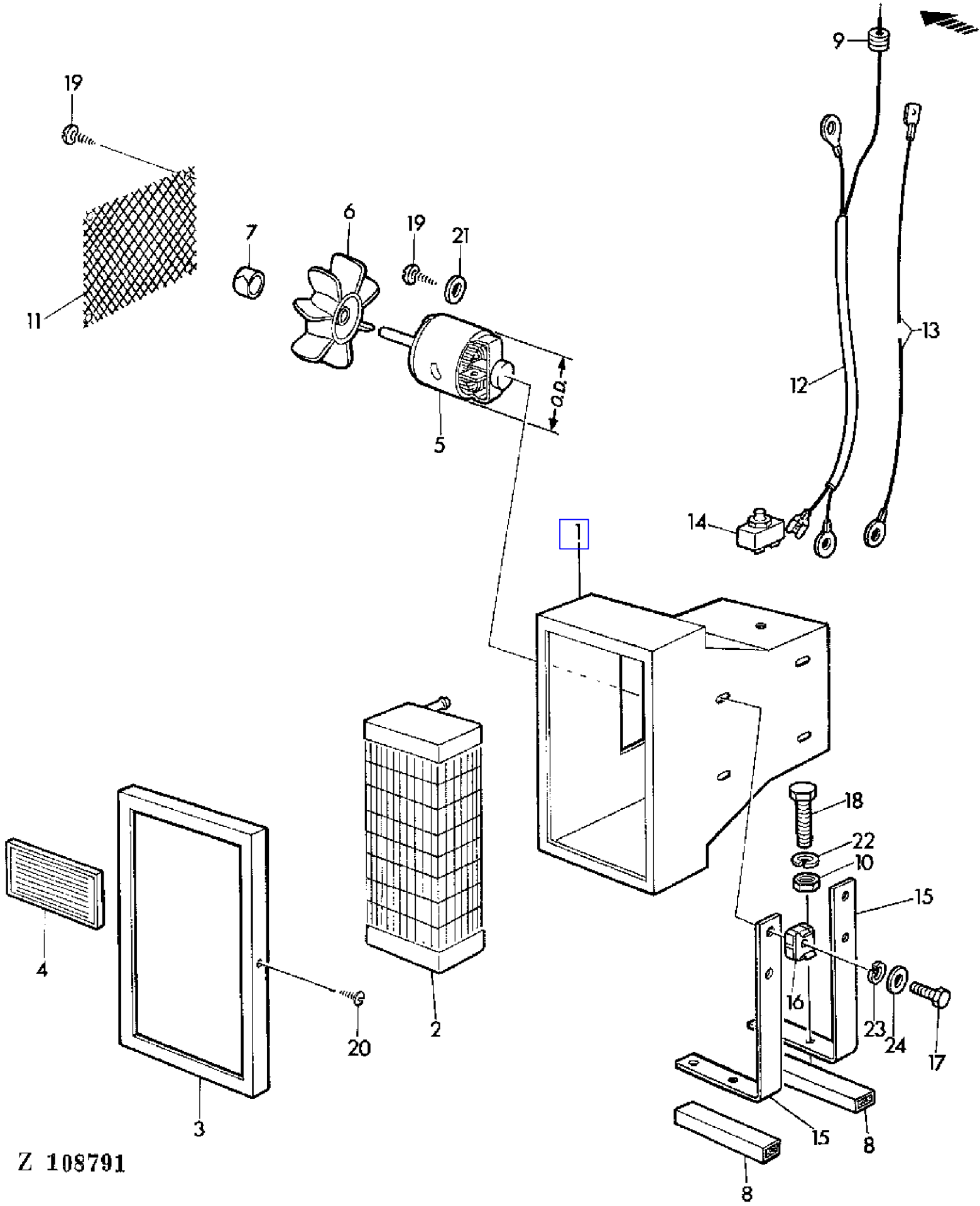

COPYRIGHT©1994 - 2008 DEERE & COMPANY Moline, Illinois All rights reserved

(3C20) CAB HEATING-STANDARD CAB
CHAUFFAGE-CABINE STANDARD
KABINENHEIZUNG-STANDARD-KABINE
RISCALDAMENTO-CABINA STANDARD
CALEFACCION DE LA CABINA-CABINA STANDARD
HYTTVARMARE-STANDARD FORARHYTT

KEY	PART NO.	PART NAME	QTY	SERIAL NO.	975	975HY/4	REMARKS
1	AL25289	HOUSING	1		X	X	(FOR AL25290)
	AL25296	HOUSING	1		X	X	(FOR AL23866)
2	AL25293	HEAT EXCHANGER	1		X	X	
3	VS140.00.02	FRAME	1		X	X	
4	VS130.00.04	GRATE	4		X	X	
5	AL25290	MOTOR	1		X	X	12V, OD = 51 MM (FOR AL25289)
	AL23866	MOTOR	1		X	X	12V, OD = 59 MM (FOR AL25296) (SUB FOR VR10157)
6	AL25291	IMPELLER	1		X	X	ASSY, INCL KEY 7
7	VR10168	BUSHING	1		X	X	
8	Z36071	SPACER	2		X	X	
9	Z21238	GROMMET	AR		X	X	
10	14M7166	LOCK NUT	4		X	X	M8
11	L30893	SCREEN	1		X	X	
12	VS009.01.37	CABLE	1		X	X	
13	VS009.01.47	CABLE	1		X	X	
14	VR10163	SWITCH	1		X	X	
15	VS140.95.31	HOLDER	2		X	X	
16	VS902.60.41	NUT	4		X	X	
17	19M7373	CAP SCREW	4		X	X	M5 X 20
18	19M7322	CAP SCREW	4		X	X	M8 X 35
19	VS902.11.44	SCREW	7		X	X	M4,2 X 13, ASSY W/KEY 21
20	37M7018	SCREW	2		X	X	M2,9 X 6,5
21	.....	DISK	3		X	X	ORD KEY 19
22	12M7008	LOCK WASHER	4		X	X	8 MM
23	12M7011	LOCK WASHER	4		X	X	5 MM
24	24M7027	WASHER	4		X	X	5,3 MM

COPYRIGHT©1994 - 2008 DEERE & COMPANY Moline, Illinois All rights reserved

(1G06) CABLE CLIPS CONNECTORS AND PLUGS
PRISES ELECTRIQUES
STECKVERBINDER FUER ELEKTRIK
CONNETTORI E DISTRIBUTORI ELETTRICI
REGLETAS DE CONEXIONES Y DISTRIBUIDORES ELECTRICOS
KOPPLINGSPLINTEN OCH STICKANSLUTNINGAR

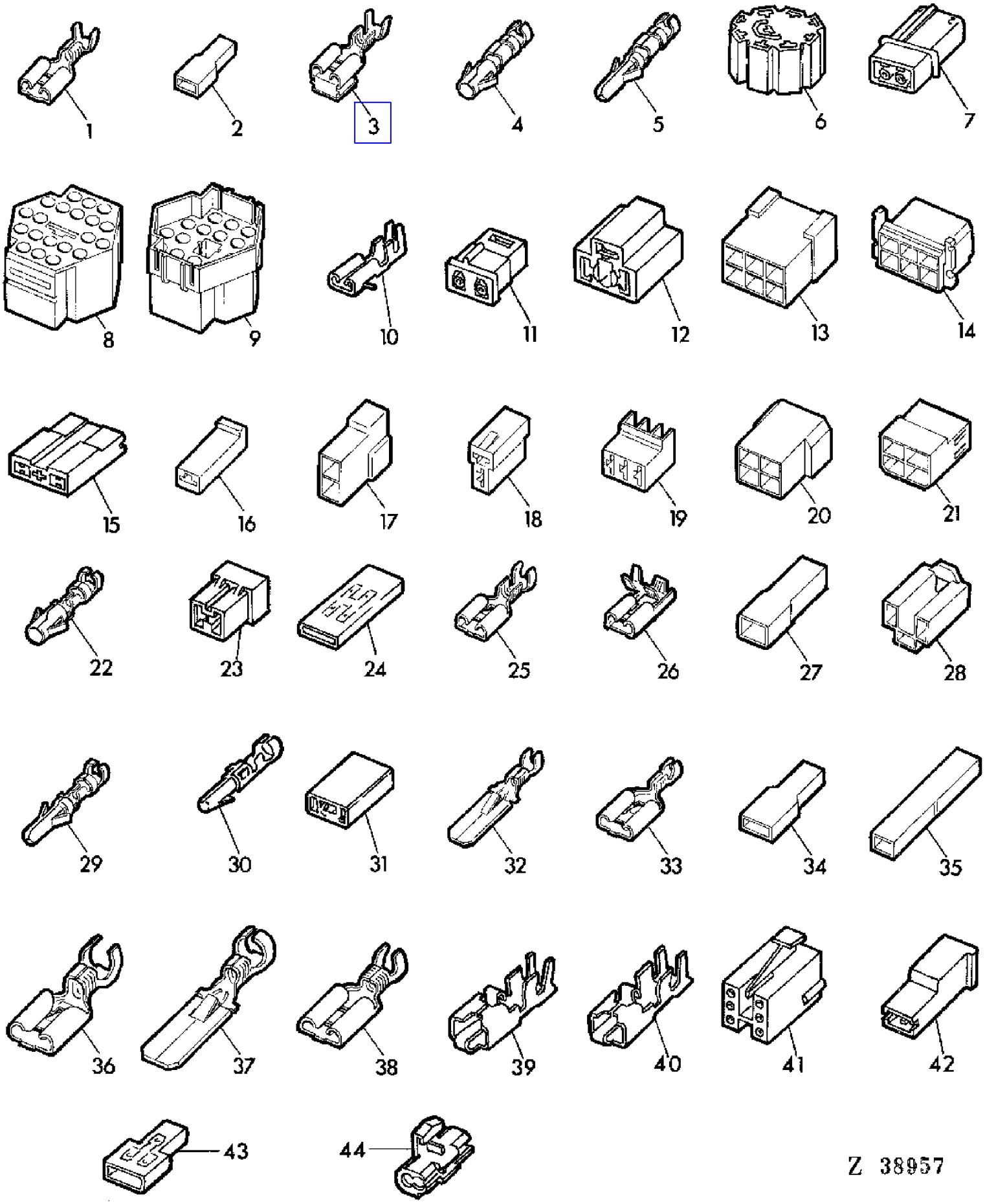

COPYRIGHT©1994 - 2008 DEERE & COMPANY Moline, Illinois All rights reserved

(1G06) CABLE CLIPS CONNECTORS AND PLUGS
PRISES ELECTRIQUES
STECKVERBINDER FUER ELEKTRIK
CONNETTORI E DISTRIBUTORI ELETTRICI
REGLETAS DE CONEXIONES Y DISTRIBUIDORES ELECTRICOS
KOPPLINGSPLINTEN OCH STICKANSLUTNINGAR

KEY	PART NO.	PART NAME	QTY	SERIAL NO.	975	975HY/4	REMARKS
1	57M7045	TERMINAL	AR		X	X	
2	57M7033	INSULATING SLEEVE	AR		X	X	(SUB FOR Z28350)
3	57M7070	CONNECTOR	AR		X	X	
4	L36681	SOCKET CONTACT	AR		X	X	(FOR L37799) (SUB FOR Z34512)
5	L35423	PIN CONTACT	AR		X	X	(FOR L37798) (SUB FOR Z34512)
6	Z40754	CONNECTOR	AR		X	X	
7	Z40862	PIN CONTACT CONNECTOR BODY	AR		X	X	
8	L37799	SOCKET CONT.CONNECTOR BO...	AR		X	X	(SUB FOR Z34510)
9	L37798	PIN CONTACT CONNECTOR BODY	AR		X	X	(SUB FOR Z34511)
10	Z40695	SOCKET	AR		X	X	
11	Z40696	SOCKET	AR		X	X	
12	Z40753	RECEPTACLE CONNECTOR BODY	AR		X	X	
13	57M7059	TAB CONNECTOR BODY	AR		X	X	(SUB FOR Z29297)
14	57M7058	RECEPTACLE CONNECTOR BODY	AR		X	X	(SUB FOR Z29296)
15	Z40742	RECEPTACLE CONNECTOR BODY	AR		X	X	
16	57M7067	RECEPTACLE CONNECTOR BODY	AR		X	X	(SUB FOR Z34559)
17	57M7066	TAB CONNECTOR BODY	AR		X	X	
18	57M7065	RECEPTACLE CONNECTOR BODY	AR		X	X	
19	57M7062	RECEPTACLE CONNECTOR BODY	AR		X	X	
20	57M7061	TAB CONNECTOR BODY	AR		X	X	(SUB FOR Z34509)
21	57M7060	RECEPTACLE CONNECTOR BODY	AR		X	X	(SUB FOR Z34508)
22	L36685	SOCKET CONTACT	AR		X	X	(FOR L37799) (SUB FOR Z34515)
23	Z30963	ELECTRICAL PLUG	AR		X	X	
24	AZ31110	RECEPTACLE CONNECTOR BODY	AR		X	X	
25	57M7041	TERMINAL	AR		X	X	
26	57M7069	TERMINAL	AR		X	X	
27	57M7068	TAB CONNECTOR BODY	AR		X	X	(SUB FOR Z34560)
28	57M7064	RECEPTACLE CONNECTOR BODY	AR		X	X	
29	L36670	PIN CONTACT	AR		X	X	(FOR L37798) (SUB FOR Z34513)
30	Z40755	ELECTRICAL PLUG	AR		X	X	
31	H104855	RECEPTACLE CONNECTOR BODY	AR		X	X	(SUB FOR Z40924)
32	57M7039	TAB	AR		X	X	(SUB FOR Z29299)
33	57M7038	TERMINAL	AR		X	X	
34	57M7072	INSULATING SLEEVE	AR		X	X	
35	57M7073	FLAT CONNECTOR	AR		X	X	
36	57M7071	TERMINAL	AR		X	X	
37	57M7040	TAB	AR		X	X	
38	57M7046	TERMINAL	AR		X	X	
39	Z40740	ELECTRICAL PLUG	AR		X	X	2,5 - 4,0 MM2
40	Z40741	ELECTRICAL PLUG	AR		X	X	0,7 - 2,0 MM2
41	Z40756	ELECTRICAL PLUG	AR		X	X	
42	Z40757	INSULATING SLEEVE	AR		X	X	

COPYRIGHT©1994 - 2008 DEERE & COMPANY Moline, Illinois All rights reserved

(1G06) CABLE CLIPS CONNECTORS AND PLUGS
PRISES ELECTRIQUES
STECKVERBINDER FUER ELEKTRIK
CONNETTORI E DISTRIBUTORI ELETTRICI
REGLETAS DE CONEXIONES Y DISTRIBUIDORES ELECTRICOS
KOPPLINGSPLINTEN OCH STICKANSLUTNINGAR

KEY	PART NO.	PART NAME	QTY	SERIAL NO.	975	975HY/4	REMARKS
43	AZ31109	ELECTRICAL PLUG	AR		X	X	
44	57M7095	CONNECTOR	AR		X	X	(SUB FOR AZ26518)

COPYRIGHT©1994 - 2008 DEERE & COMPANY Moline, Illinois All rights reserved

(1A15) CAMSHAFT/VALVES/ROCKER ARM SHAFT
ARBRE A CAMES/SOUPAPES/ARBRE DES CULBUTEURS
NOCKENWELLE/VENTILE/KIPPHEBELACHSE
ALBERO A CAMME/VALVOLE/ALBERO BILANCIERI
ARBOL DE LEVAS/VALVULAS/EJE DE BALANCINES
KAMAXEL/VENTILER/VIPPARMSAXEL

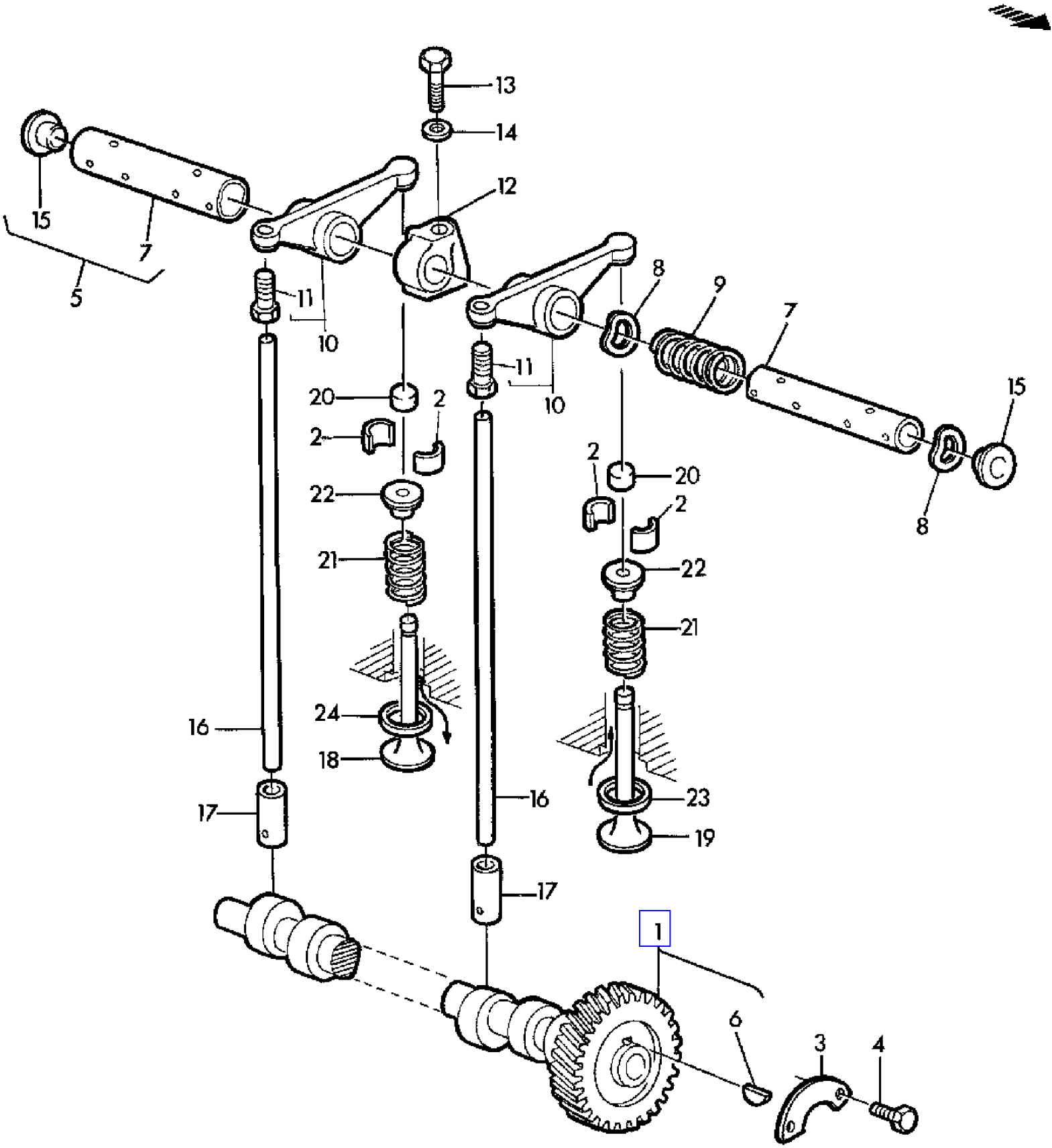

Z 26841

COPYRIGHT©1994 - 2008 DEERE & COMPANY Moline, Illinois All rights reserved

(1A15) CAMSHAFT/VALVES/ROCKER ARM SHAFT
ARBRE A CAMES/SOUPAPES/ARBRE DES CULBUTEURS
NOCKENWELLE/VENTILE/KIPPHEBELACHSE
ALBERO A CAMME/VALVOLE/ALBERO BILANCIERI
ARBOL DE LEVAS/VALVULAS/EJE DE BALANCINES
KAMAXEL/VENTILER/VIPPARMSAXEL

KEY	PART NO.	PART NAME	QTY	SERIAL NO.	975	975HY/4	REMARKS
1	RE14977	CAMSHAFT	1		X	X	INCL KEY 6 (SUB FOR AR79624, AT18190, DD13432)
2	T20077	RETAINER	24		X	X	
3	T20072	PLATE	1		X	X	
4	19H1731	CAP SCREW	2		X	X	3/8" X 1"
5	DD12121	ROCKER ARM SHAFT	1		X	X	KIT, INCL KEYS 7,15
6	T28041	SHAFT KEY	1		X	X	
7	R54986	SHAFT	1		X	X	NSEP (ORD DD12121)
8	T20316	WASHER	2		X	X	
9	T20314	SPRING	5		X	X	
10	RE19031	ROCKER ARM	12		X	X	INCL KEY 11 (SUB FOR AT31250)
11	.....	CAP SCREW	12		X	X	NSEP (ORD RE19031)
12	T20315	SUPPORT	6		X	X	
13	19H1733	CAP SCREW	6		X	X	3/8" X 2-1/2"
14	R42729	WASHER	6		X	X	(SUB FOR T23594)
15	R54565	PLUG	2		X	X	
16	T20310	PIN	12		X	X	
17	T20073	TAPPET	12		X	X	
18	R51735	INTAKE VALVE	6		X	X	OD = STANDARD
	R57426	INTAKE VALVE	AR		X	X	OD = +0,076 MM (.003")
	R57428	INTAKE VALVE	AR		X	X	OD = +0,762 MM (.030") (SUB FOR R57427)
19	R52252	EXHAUST VALVE	6		X	X	OD = STANDARD
	R57333	EXHAUST VALVE	AR		X	X	OD = +0,076 MM (.003")
	R57337	EXHAUST VALVE	AR		X	X	OD = +0,762 MM (.030") (SUB FOR R57335)
20	T20129	CAP	12		X	X	
21	R26125	SPRING	12		X	X	
22	RE11410	ROTATOR	12		X	X	(SUB FOR AR41006)
23	CD13979	VALVE SEAT INSERT	6		X	X	
24	CD14725	VALVE SEAT INSERT	6		X	X	

COPYRIGHT©1994 - 2008 DEERE & COMPANY Moline, Illinois All rights reserved

(4C24) CHAFFER
GRILLES A OTONS
KURZSTROHSIEBE
CRIVELLI SUPERIORI
CRIBAS DE GRANZAS
OEVERSALL

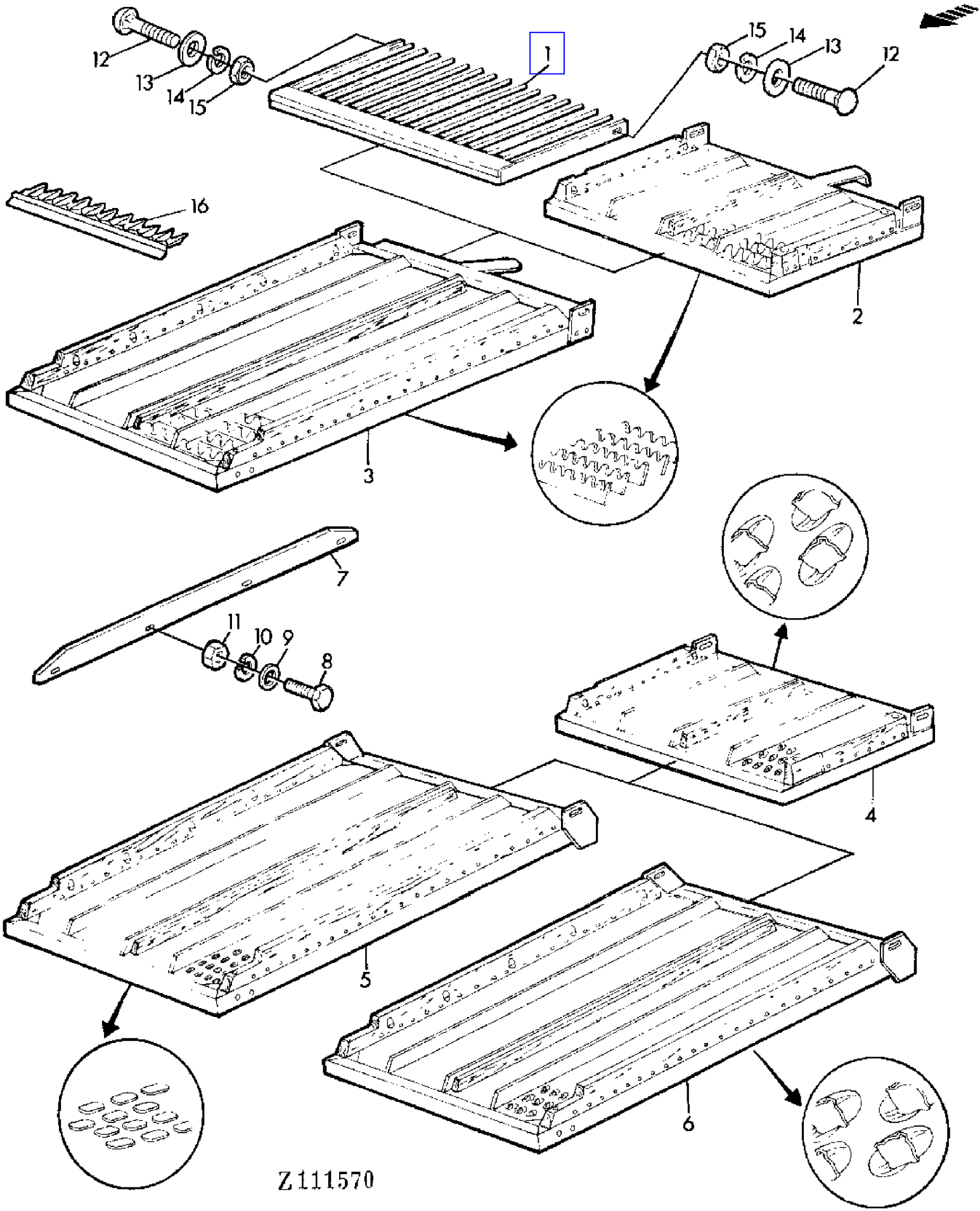

COPYRIGHT©1994 - 2008 DEERE & COMPANY Moline, Illinois All rights reserved

(4C24) CHAFFER
GRILLES A OTONS
KURZSTROHSIEBE
CRIVELLI SUPERIORI
CRIBAS DE GRANZAS
OEVERSALL

KEY	PART NO.	PART NAME	QTY	SERIAL NO.	975	975HY/4	REMARKS
1	AZ14921	EXTENSION	1		X	X	
2	AZ12620	EXTENSION	1		X	X	
3	AZ22798	CHAFFER	1		X	X	
4	AZ14953	EXTENSION	1		X	X	
5	AZ23531	CHAFFER	1		X	X	
6	AZ23529	CHAFFER	1		X	X	
7	Z33930	GUIDE	6		X	X	
8	21M7034	SCREW	AR		X	X	M5 X 12
9	24M7087	WASHER	AR		X	X	5,5 MM
10	12M7011	LOCK WASHER	AR		X	X	5 MM
11	14M7028	NUT	AR		X	X	M5
12	03M7017	BOLT	AR		X	X	M10 X 25
13	Z38269	WASHER	AR		X	X	11,5 MM
14	12M7013	LOCK WASHER	AR		X	X	10 MM
15	14M7140	NUT	AR		X	X	M10
16	Z44873	FINGER GRATE	AR		X	X	

COPYRIGHT©1994 - 2008 DEERE & COMPANY Moline, Illinois All rights reserved

(4C12) CHAIN DRIVE-CROSS SHAKER
COMMANDE PAR CHAINE-SECOUEUR ROTATIF
KETTENANTRIEB-QUERSCHUETTLER
COMANDO A CATENA-SCUOTITORE INCROCIATO
TRANSMISION POR CADENA-SACUDIDOR TRANSVERSAL
TVARSKAKARENS KEDJEDRIVNING

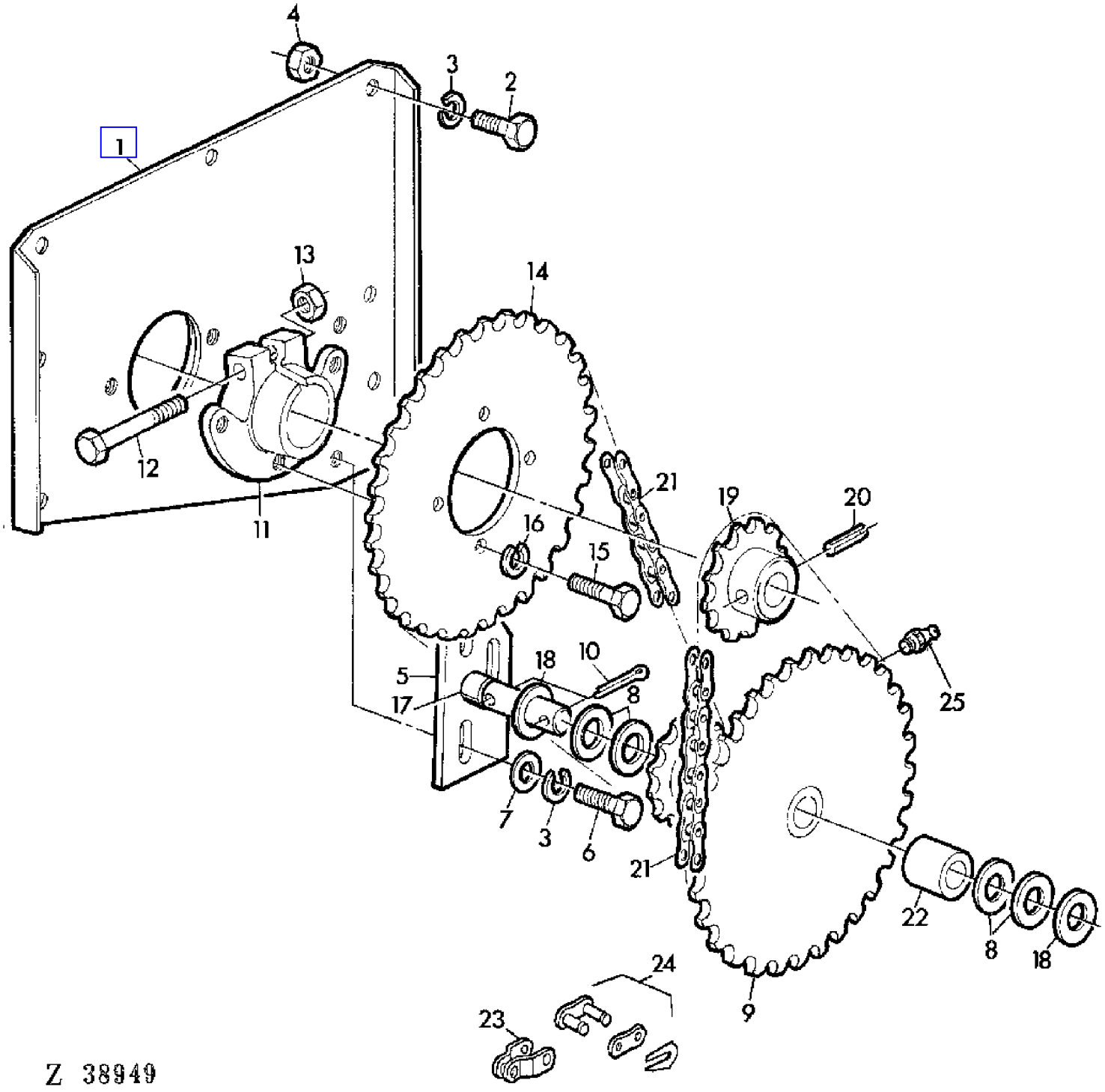

COPYRIGHT©1994 - 2008 DEERE & COMPANY Moline, Illinois All rights reserved

(4C12) CHAIN DRIVE-CROSS SHAKER
COMMANDE PAR CHAINE-SECOUEUR ROTATIF
KETTENANTRIEB-QUERSCHUETTLER
COMANDO A CATENA-SCUOTITORE INCROCIATO
TRANSMISION POR CADENA-SACUDIDOR TRANSVERSAL
TVARSKAKARENS KEDJEDRIVNING

KEY	PART NO.	PART NAME	QTY	SERIAL NO.	975	975HY/4	REMARKS
1	AZ22593	SHEET	1	- 026422	X	X	
2	19M7166	CAP SCREW	AR	- 026422	X	X	M10 X 20
3	12M7013	LOCK WASHER	AR	- 026422	X	X	10 MM
4	14M7140	NUT	AR	- 026422	X	X	M10
5	AZ22595	PIVOT	1	- 026422	X	X	
6	19M7168	CAP SCREW	AR	- 026422	X	X	M10 X 30
7	24M7040	WASHER	AR	- 026422	X	X	11 MM
8	Z27188	SHIM	4	- 026422	X	X	20,5 X 28 X 0,56 MM
9	AZ19546	CHAIN SPROCKET	1	- 026422	X	X	ASSY, INCL KEY 22
10	11M7022	COTTER PIN	2	- 026422	X	X	4 X 30 MM
11	Z10758	HUB	1	- 026422	X	X	
12	19M7327	CAP SCREW	1	- 026422	X	X	M10 X 65
13	14M7167	LOCK NUT	1	- 026422	X	X	M10
14	Z30948	CHAIN SPROCKET	1	- 026422	X	X	
15	19M7139	CAP SCREW	4	- 026422	X	X	M8 X 20
16	12M7008	LOCK WASHER	4	- 026422	X	X	8 MM
17	Z33127	SPACER	1	- 026422	X	X	
18	L18947	WASHER	2	- 026422	X	X	
19	Z30929	CHAIN SPROCKET	1	- 026422	X	X	
20	34M7041	SPRING PIN	1	- 026422	X	X	6 X 36 MM
21	AZ19536	LINK CHAIN	2	- 026422	X	X	L = 77, INCL KEYS 23,24
22	Z21765	SPACER	2	- 026422	X	X	
23	AZ12881	LINK	AR	- 026422	X	X	
24	AL14207	LINK	AR	- 026422	X	X	
25	58M7004	LUBRICATION FITTING	1	- 026422	X	X	

COPYRIGHT©1994 - 2008 DEERE & COMPANY Moline, Illinois All rights reserved

(2H14) CHAINS
CHAINES
KETTEN
CATENE
CADENAS
DRIVKEDJOR

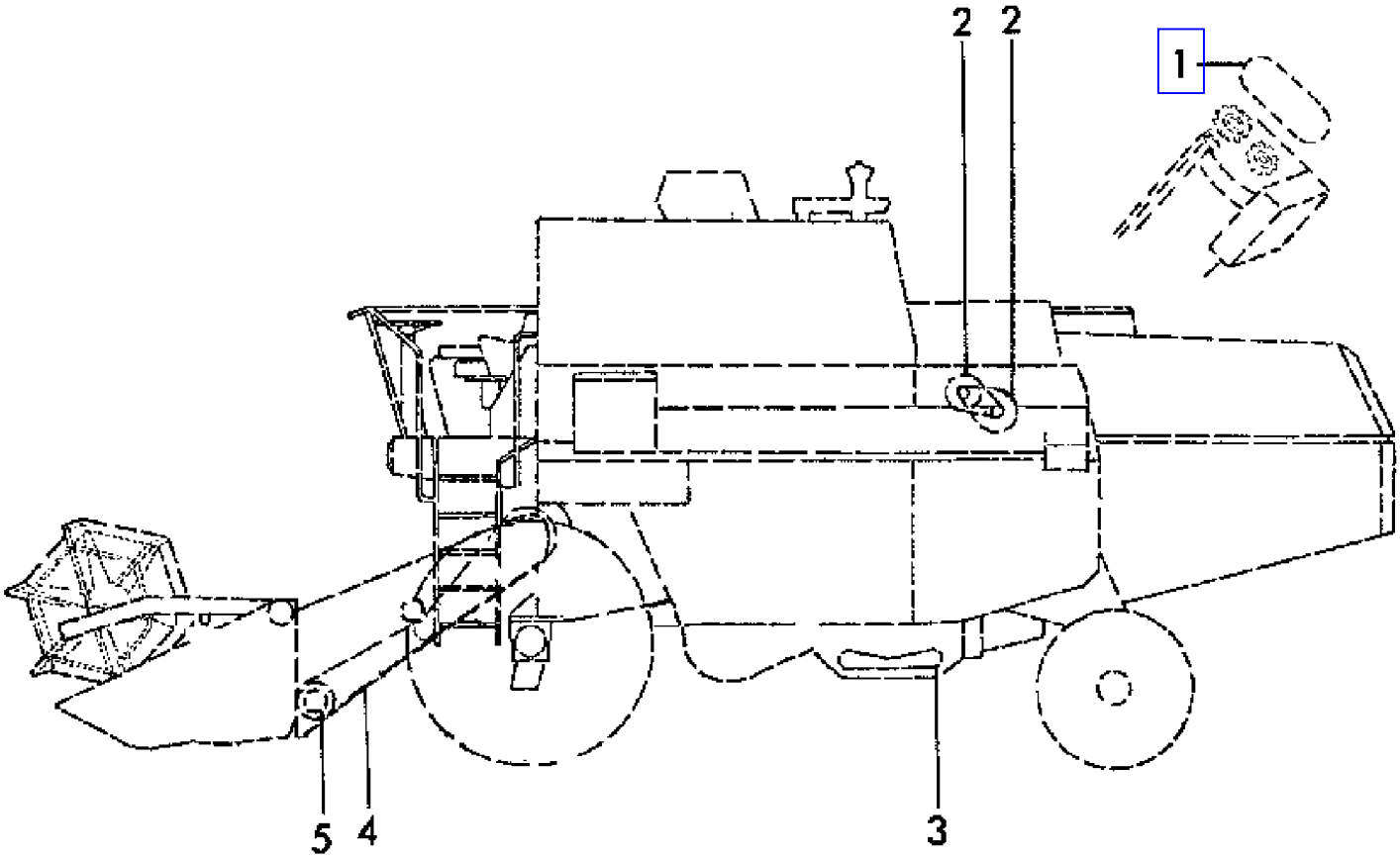

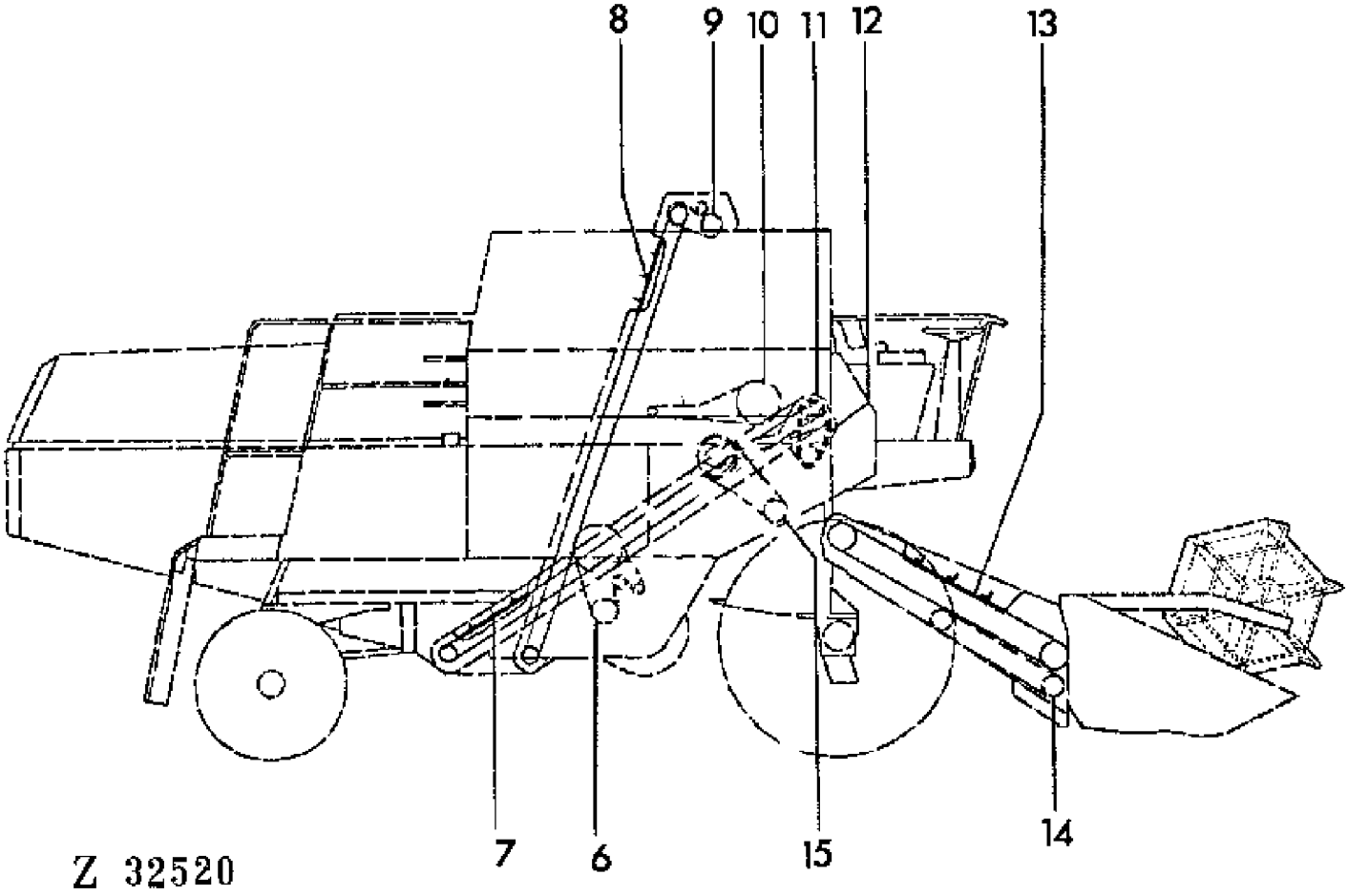

COPYRIGHT©1994 - 2008 DEERE & COMPANY Moline, Illinois All rights reserved

(2H14) CHAINS
CHAINES
KETTEN
CATENE
CADENAS
DRIVKEDJOR

KEY	PART NO.	PART NAME	QTY	SERIAL NO.		975	975HY/4	REMARKS
1	AZ26761	LINK CHAIN	1			X	X	L = 37
2	AZ19536	LINK CHAIN	2		- 026422	X	X	L = 77
3	AZ23212	LINK CHAIN	1			X	X	L = 88
4	AZ28816	LINK CHAIN	1	024837	-	X	X	L = 144
	AZ28817	LINK CHAIN	1	024837	-	X	X	(A) L = 172
5	AN102383	LINK CHAIN	1			X	X	AR, L = 13
6	AZ27086	LINK CHAIN	1	017018	-	X	X	L = 104
7	AZ27730	GATHERER CHAIN	1			X	X	L = 145
8	AZ23236	LINK CHAIN	1			X	X	L = 168
9	AZ32087	ROLLER CHAIN	1			X	X	L = 34 (SUB FOR AZ10363, AZ32090)
10	AZ22499	LINK CHAIN	1			X	X	L = 123
11	AZ22521	LINK CHAIN	1			X	X	L = 124
12	AZ32089	ROLLER CHAIN	1			X	X	L = 39 (SUB FOR AZ22522)
13	AZ24241	GATHERER CHAIN	1	026723	-	X	X	L = 87
	AZ28851	LINK CHAIN	1	025573	-	X	X	L = 107
14	AZ25031	LINK CHAIN	1			X	X	L = 88
15	AZ18000	LINK CHAIN	1			X	X	L = 107

(A) FOR FEEDER CONVEYOR LONG
POUR CONVOYEUR D'ALIMENTATION LONG
FUER SCHRAEGFOERDERER LANG
PER COLLO ALOMENTATORE LUNGO
PARA ELEVADOR DE MIES LARGO
FOR LANG INMATNINGSELEVATOR

COPYRIGHT©1994 - 2008 DEERE & COMPANY Moline, Illinois All rights reserved

(1G22) CHARGE PUMP (HYDROSTATIC DRIVE)
POMPE DE GAVAGE (ENTRAINEMENT HYDROSTATIQUE)
FUELLPUMPE HYDROSTAT
POMPA DI CARICA (IMPIANTO IDROSTATICO)
BOMBA DE CARGA (INSTALACION HIDROSTATICA)
LADDNINGSPUMP (HYDROSTATISKT DRIVNING)

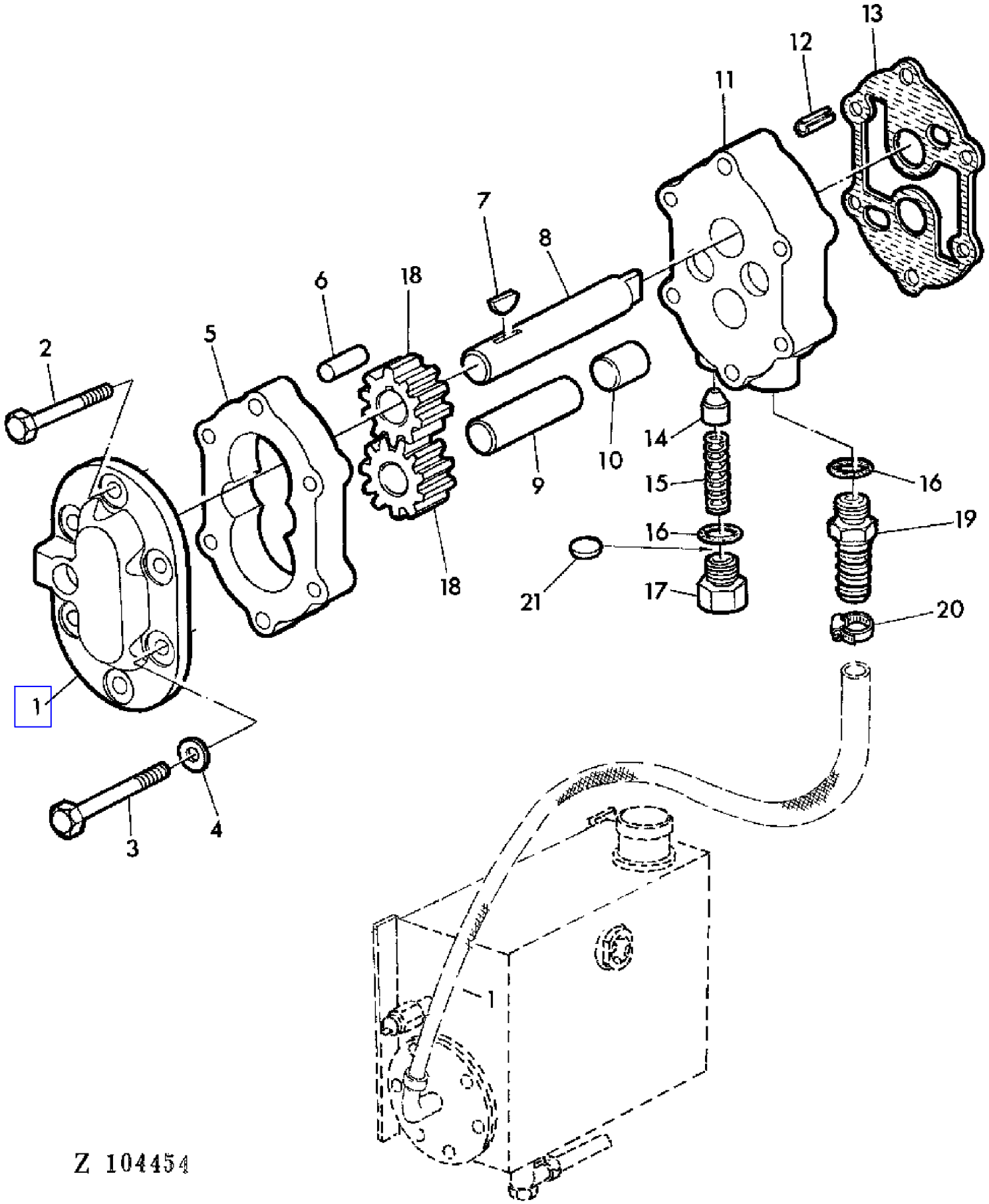

COPYRIGHT©1994 - 2008 DEERE & COMPANY Moline, Illinois All rights reserved

(1G22) CHARGE PUMP (HYDROSTATIC DRIVE)
POMPE DE GAVAGE (ENTRAINEMENT HYDROSTATIQUE)
FUELLPUMPE HYDROSTAT
POMPA DI CARICA (IMPIANTO IDROSTATICO)
BOMBA DE CARGA (INSTALACION HIDROSTATICA)
LADDNINGSPUMP (HYDROSTATISKT DRIVNING)

KEY	PART NO.	PART NAME	QTY	SERIAL NO.	975	975HY/4	REMARKS
1	.....	COVER	1			X	(ORD AH63273)
2	19H2850	CAP SCREW	2			X	1/4" X 2-1/4"
3	19H2851	CAP SCREW	4			X	1/4" X 3"
4	24H1286	WASHER	4			X	9/32" X 1/2" X .060"
5	AH63278	PLATE	1			X	ASSY, INCL KEY 18
6	H63216	BUSHING	2			X	
7	26H67	SHAFT KEY	1			X	1/8" X 3/8"
8	H63215	SHAFT	1			X	
9	U13769	DOWEL PIN	1			X	
10	H63218	DOWEL PIN	1			X	
11	AH63275	HOUSING	1			X	
12	H63214	SPRING PIN	1			X	
13	T54909	GASKET	1			X	
14	H89242	PISTON	1			X	
15	H89241	SPRING	1			X	
16	R26906	O-RING	2			X	
17	H63221	FITTING	1			X	
18	.....	CASE	2			X	NSEP (ORD AH63278)
19	Z44129	FITTING	1			X	(SUB FOR Z37488)
20	Z26822	CLAMP	1			X	
21	T54908	SHIM	AR			X	
..	AH63273	PUMP	1			X	INCL KEYS 1-18

COPYRIGHT©1994 - 2008 DEERE & COMPANY Moline, Illinois All rights reserved

(4D18) CLEANING FAN TENSION PULLEY
TENDEUR DU VENTILATEUR
GEBLAESESPANNROLLE
PULEGGIA TENDITRICE DEL VENTILATORE
POLEA TENSORA DEL VENTILADOR
SPANNRULLE FOR FLAKTEN

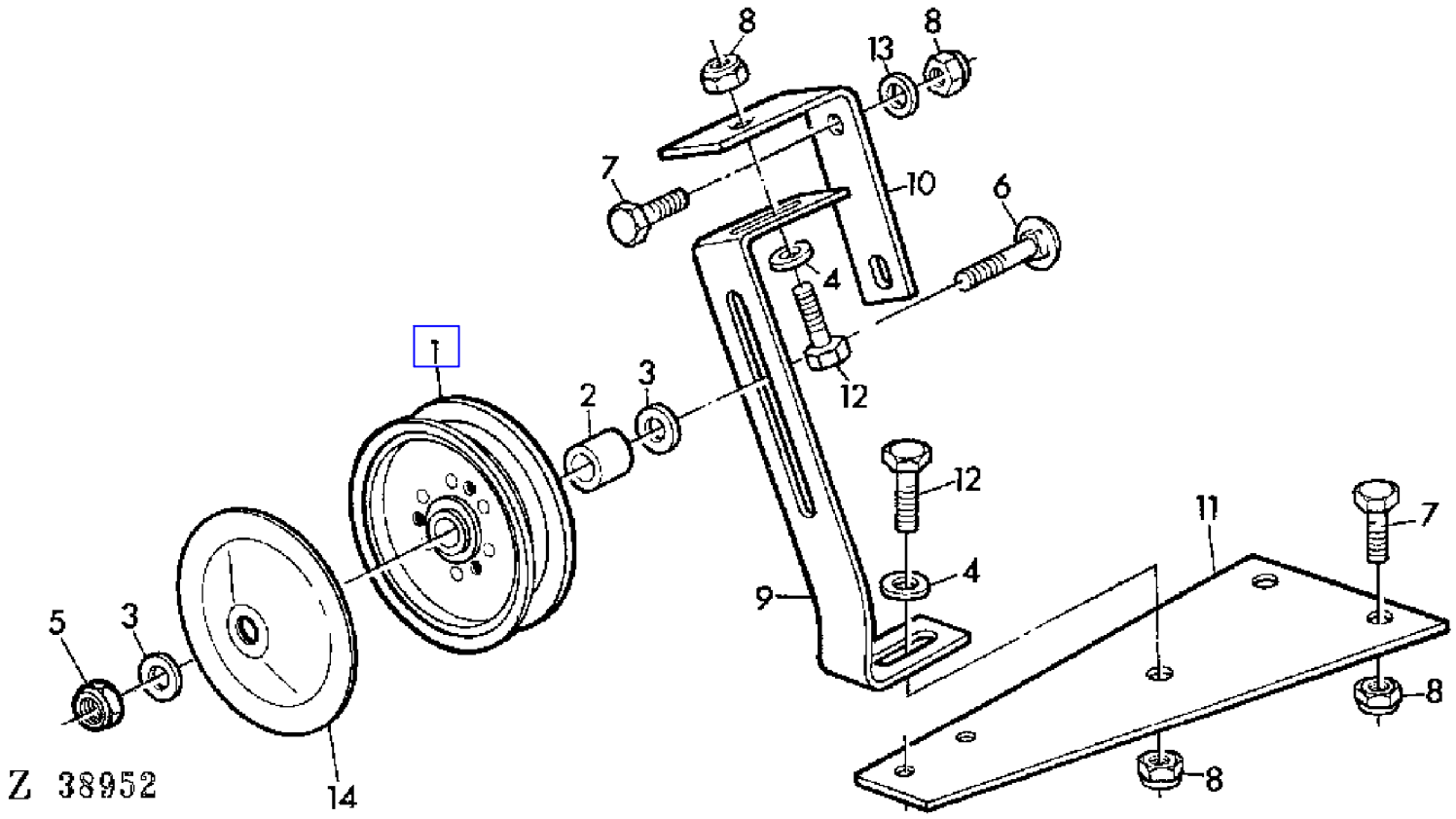

COPYRIGHT©1994 - 2008 DEERE & COMPANY Moline, Illinois All rights reserved

(4D18) CLEANING FAN TENSION PULLEY
TENDEUR DU VENTILATEUR
GEBLAESESPANNROLLE
PULEGGIA TENDITRICE DEL VENTILATORE
POLEA TENSORA DEL VENTILADOR
SPANNRULLE FOR FLAKTEN

KEY	PART NO.	PART NAME	QTY	SERIAL NO.	975	975HY	REMARKS
1	AP24917	IDLER	1		X	X	
2	Z20360	SPACER	1		X	X	
3	24M7049	WASHER	2		X	X	18 MM
4	24M7178	WASHER	2		X	X	10,5 MM
5	14M7170	LOCK NUT	1		X	X	M16
6	03M7080	BOLT	1		X	X	M16 X 70
7	19M7167	CAP SCREW	3		X	X	M10 X 25
8	14M7167	LOCK NUT	6		X	X	M10
9	Z26188	HOLDER	1		X	X	
10	Z26185	HOLDER	1		X	X	
11	Z26183	PLATE	1		X	X	
12	19M7168	CAP SCREW	2		X	X	M10 X 30
13	24M7040	WASHER	1		X	X	11 MM
14	Z25966	GUARD	1		X	X	

COPYRIGHT©1994 - 2008 DEERE & COMPANY Moline, Illinois All rights reserved

(4D20) CLEANING FAN-ADJUSTING ROD
TIGE DE REGLAGE DU VENTILATEUR
GEBLAESE-VERSTELLSTANGE
ASTA REGOLAZIONE DEL VENTILATORE
VARILLA DE AJUSTE DEL VENTILADOR
FLAKTENS JUSTERTAG

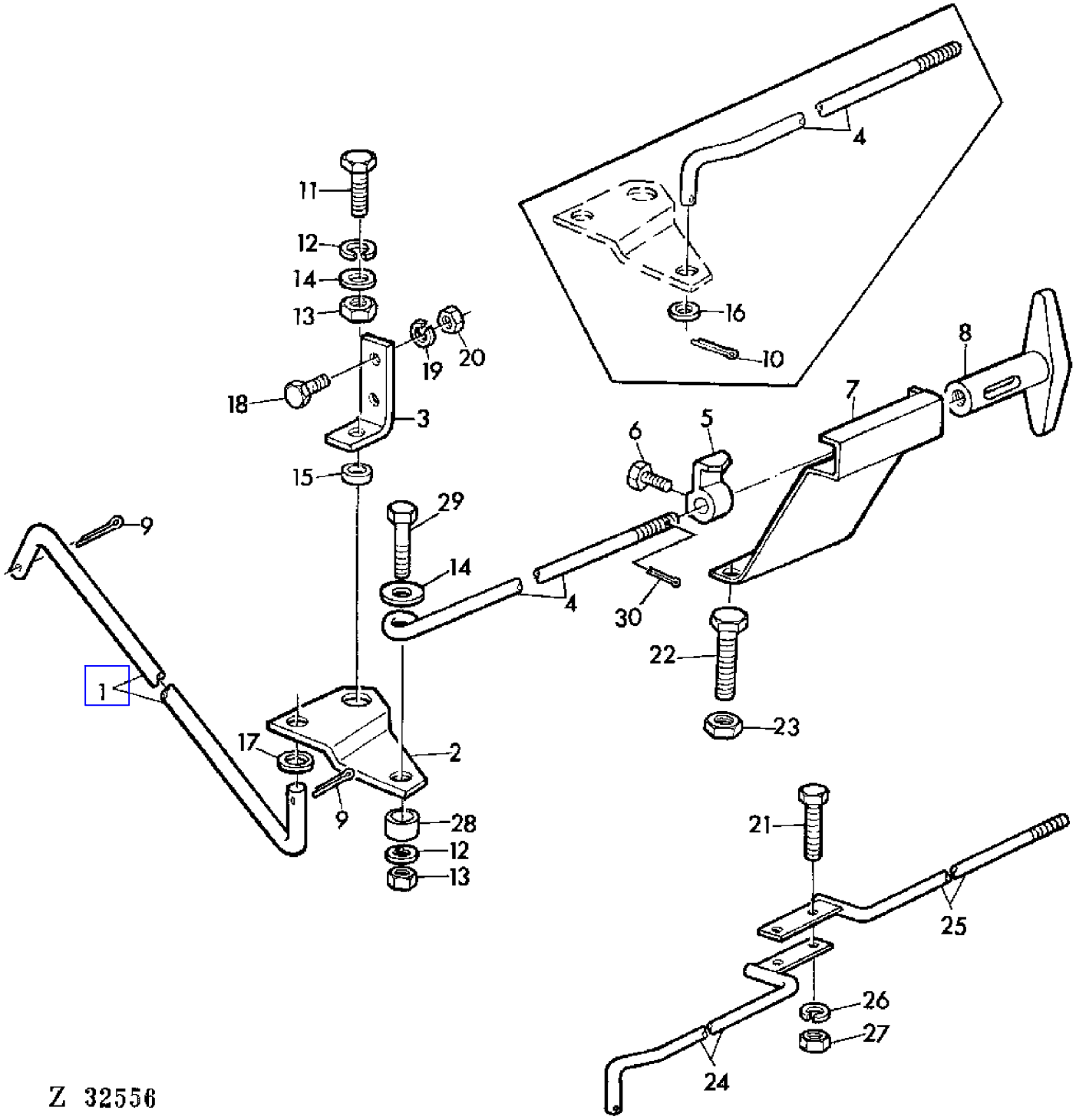

COPYRIGHT©1994 - 2008 DEERE & COMPANY Moline, Illinois All rights reserved

(4D20) CLEANING FAN-ADJUSTING ROD
TIGE DE REGLAGE DU VENTILATEUR
GEBLAESE-VERSTELLSTANGE
ASTA REGOLAZIONE DEL VENTILATORE
VARILLA DE AJUSTE DEL VENTILADOR
FLAKTENS JUSTERTAG

KEY	PART NO.	PART NAME	QTY	SERIAL NO.		975	975HY/4	REMARKS
1	Z23069	ROD	1		- 008277	X		
	Z36147	ROD	1	008278	-	X	X	
2	Z34804	LEVER	1		- 008277	X		
	Z36117	LEVER	1	008278	-	X	X	
3	Z20699	ANGLE	1			X	X	
4	Z34803	ROD	1		- 008277	X		
	Z39014	EYEBOLT	1			X	X	(SUB FOR Z36719)
5	AZ13319	GAUGE	1			X	X	
6	19M7159	CAP SCREW	1			X	X	M6 X 15
7	AZ21552	HOLDER	1			X	X	
8	Z11242	GRIP	1			X	X	(SUB FOR Z10143)
9	11M7020	COTTER PIN	2			X	X	4 X 25 MM
10	11M7013	COTTER PIN	1		- 009171	X		3 X 20 MM
11	19M7168	CAP SCREW	1			X	X	M10 X 30
12	12M7013	LOCK WASHER	2			X	X	10 MM
13	14M7140	NUT	2			X	X	M10
14	24M7101	WASHER	2			X	X	11,5 MM
15	Z20701	WASHER	1			X	X	
16	24M7040	WASHER	2		- 009171	X		11 MM
17	24M7038	WASHER	1		- 008277	X		14 MM
	24M7040	WASHER	1	008278	-	X	X	11 MM
18	19M7139	CAP SCREW	2			X	X	M8 X 20
19	12M7008	LOCK WASHER	2			X	X	8 MM
20	14M7029	NUT	2			X	X	M8
21	19M7375	CAP SCREW	2			X	X	M6 X 18
22	19M7387	CAP SCREW	2			X	X	M12 X 40
23	14M7168	LOCK NUT	2			X	X	M12
24	AZ24799	ROD	1			X	X	(A) (ORD AZ36945)
25	AZ24800	ROD	1			X	X	(A) (ORD AZ36945)
26	12M7012	LOCK WASHER	2			X	X	6 MM
27	14M7027	NUT	2			X	X	M6
28	Z23870	SPACER	1	009172	-	X	X	
29	19M7169	CAP SCREW	1	009172	-	X	X	M10 X 35
30	11M7010	SPRING PIN	1			X	X	2 X 18 MM

(A) WITH CHOPPER ATTACHMENT
AVEC HACHE-PAILLE
BEI HAECKSLERANBAU
CON TRINCIAPAGLIA
CON PICADOR DE PAJA
VID HALMHACK

COPYRIGHT©1994 - 2008 DEERE & COMPANY Moline, Illinois All rights reserved

(4D22) CLEANING FAN-ADJUSTING ROD
TIGE DE REGLAGE DU VENTILATEUR
GEBLAESE-VERSTELLSTANGE
ASTA REGOLAZIONE DEL VENTILATORE
VARILLA DE AJUSTE DEL VENTILADOR
FLAKTENS JUSTERTAG

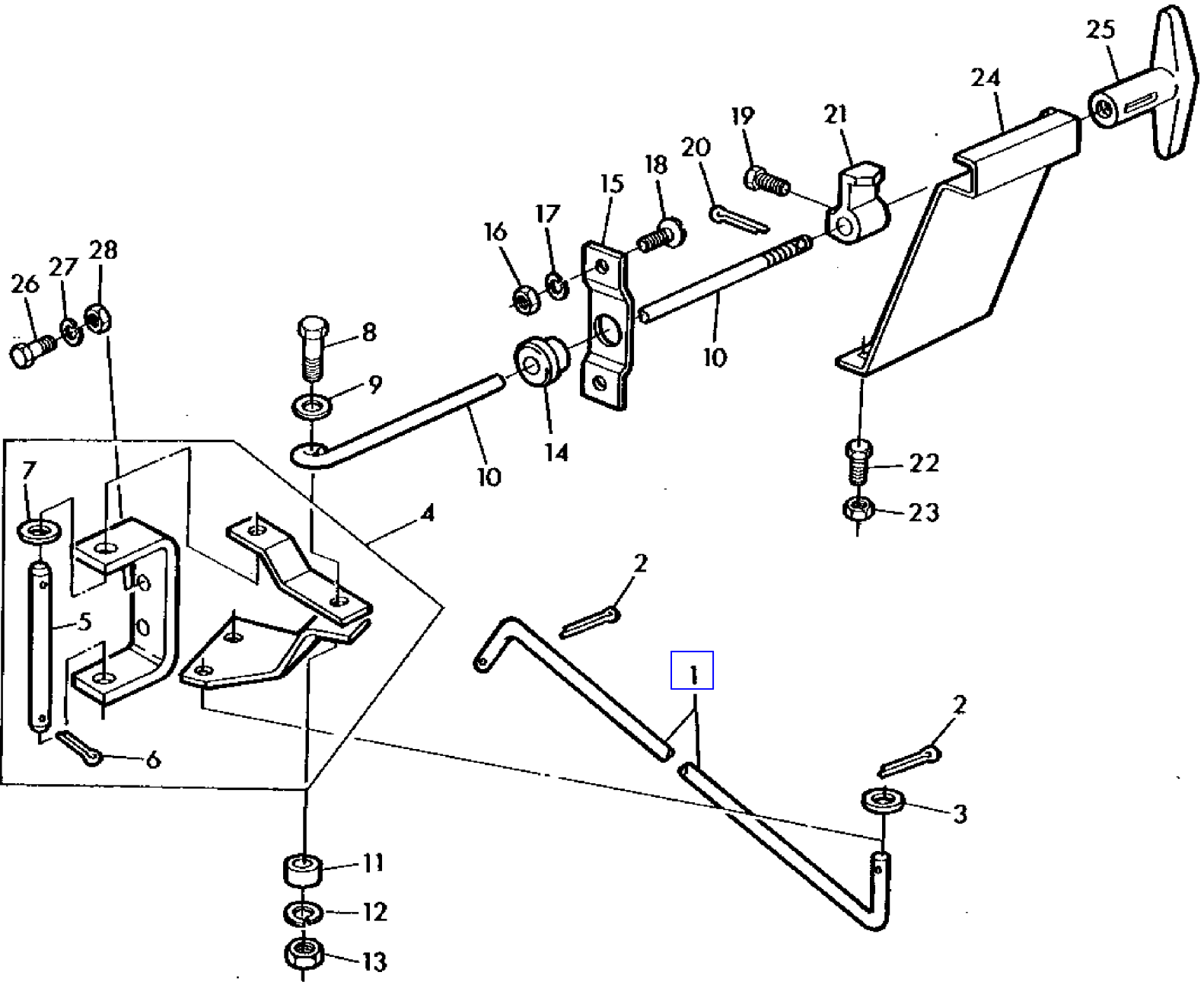

z111626

COPYRIGHT©1994 - 2008 DEERE & COMPANY Moline, Illinois All rights reserved

(4D22) CLEANING FAN-ADJUSTING ROD
TIGE DE REGLAGE DU VENTILATEUR
GEBLAESE-VERSTELLSTANGE
ASTA REGOLAZIONE DEL VENTILATORE
VARILLA DE AJUSTE DEL VENTILADOR
FLAKTENS JUSTERTAG

KEY	PART NO.	PART NAME	QTY	SERIAL NO.	975	975HY/4	REMARKS
1	Z36147	ROD	1		X	X	
2	11M7019	COTTER PIN	AR		X	X	4 X 18 MM
3	24M7040	WASHER	AR		X	X	11 MM
4	AZ35640	LEVER	1		X	X	
5	Z44733	PIN	1		X	X	
6	11M7013	COTTER PIN	AR		X	X	3,2 X 18 MM
7	24M7106	WASHER	AR		X	X	10 MM
8	19M7382	CAP SCREW	AR		X	X	M10 X 40
9	24M7101	WASHER	AR		X	X	11,5 MM
10	Z45097	ROD	1		X	X	
11	Z45089	BUSHING	1		X	X	
12	12M7013	LOCK WASHER	AR		X	X	10 MM
13	14M7140	NUT	AR		X	X	M10
14	Z31550	BUSHING	1		X	X	
15	Z45091	HOLDER	1		X	X	
16	14M7027	NUT	AR		X	X	M6
17	12M7012	LOCK WASHER	AR		X	X	6 MM
18	21M7087	SCREW	AR		X	X	M8 X 12
19	19M7159	CAP SCREW	1		X	X	M6 X 16
20	11M7010	SPRING PIN	AR		X	X	2 X 18 MM
21	AZ13319	GAUGE	1		X	X	
22	19M7171	CAP SCREW	AR		X	X	M12 X 35
23	14M7168	LOCK NUT	AR		X	X	M12
24	AZ35633	HOLDER	1		X	X	
25	Z11242	GRIP	1		X	X	
26	19M7139	CAP SCREW	AR		X	X	M8 X 20
27	12M7008	LOCK WASHER	AR		X	X	8 MM
28	14M7029	NUT	AR		X	X	M8
..	AZ36945	ADJUSTER	1		X	X	INCL KEYS 4-18,24 (ORD Z45094)

COPYRIGHT©1994 - 2008 DEERE & COMPANY Moline, Illinois All rights reserved

(4D04) CLEANING SHOE SUSPENSION
SUSPENSION DU CAISSON SASSEUR
SCHUETTELKASTEN-HEBELLAGERUNG
SUPPORTO ELASTICO DEL CASSONE DI PULIZIA
SUSPENSION DE LA CAJA DE CRIBAS
SALLADANS UPPHANGNING

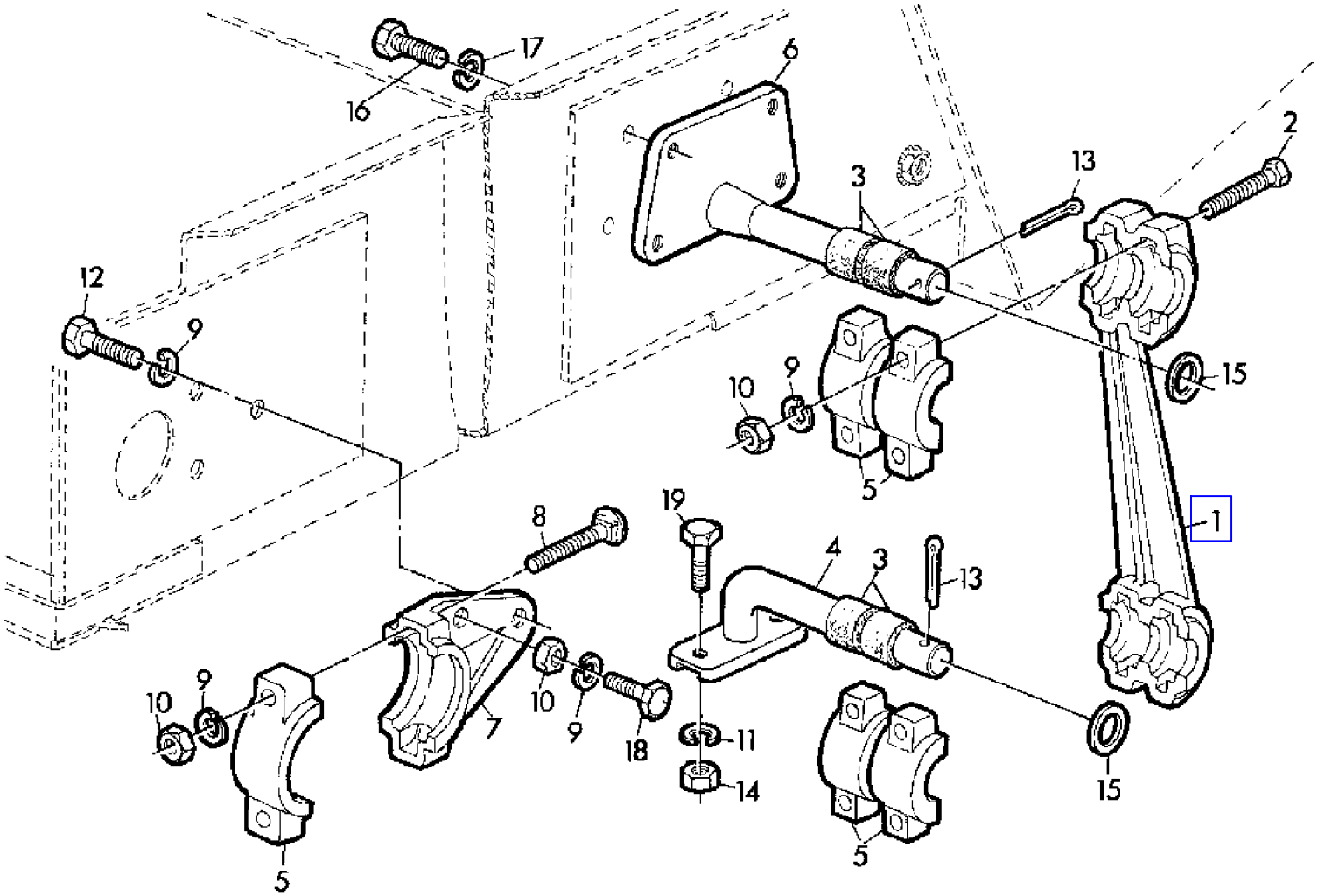

Z 31685

COPYRIGHT©1994 - 2008 DEERE & COMPANY Moline, Illinois All rights reserved

(4D04) CLEANING SHOE SUSPENSION
SUSPENSION DU CAISSON SASSEUR
SCHUETTELKASTEN-HEBELLAGERUNG
SUPPORTO ELASTICO DEL CASSONE DI PULIZIA
SUSPENSION DE LA CAJA DE CRIBAS
SALLADANS UPPHANGNING

KEY	PART NO.	PART NAME	QTY	SERIAL NO.	975	975HY/4	REMARKS
1	Z10914	HANGER	2		X	X	
2	19M7156	CAP SCREW	8		X	X	M10 X 60
3	P49545	BUSHING	AR		X	X	(SUB FOR AZ30965)
4	AZ23183	SHAFT	2		X	X	ASSY, INCL KEY 3
5	PK1931H	HOUSING	10		X	X	
6	AZ23184	SHAFT	2		X	X	ASSY, INCL KEY 3
7	Z10008	HANGER	2		X	X	
8	03M7079	BOLT	AR		X	X	M10 X 55
9	12M7013	LOCK WASHER	AR		X	X	10 MM
10	14M7140	NUT	AR		X	X	M10
11	12M7014	LOCK WASHER	AR		X	X	12 MM
12	19M7379	CAP SCREW	AR		X	X	M10 X 15
13	11M7027	COTTER PIN	AR		X	X	5 X 30 MM
14	14M7031	NUT	AR		X	X	M12
15	24M7091	WASHER	AR		X	X	26 MM
16	19M7162	CAP SCREW	AR		X	X	M8 X 16
17	12M7008	LOCK WASHER	AR		X	X	8 MM
18	19M7167	CAP SCREW	AR		X	X	M10 X 25
19	19M7285	CAP SCREW	AR		X	X	M12 X 30

COPYRIGHT©1994 - 2008 DEERE & COMPANY Moline, Illinois All rights reserved

(1I05) CLUTCH
EMBRAYAGE
KUPPLUNG
FRIZIONE
EMBRAGUE
KOPPLING

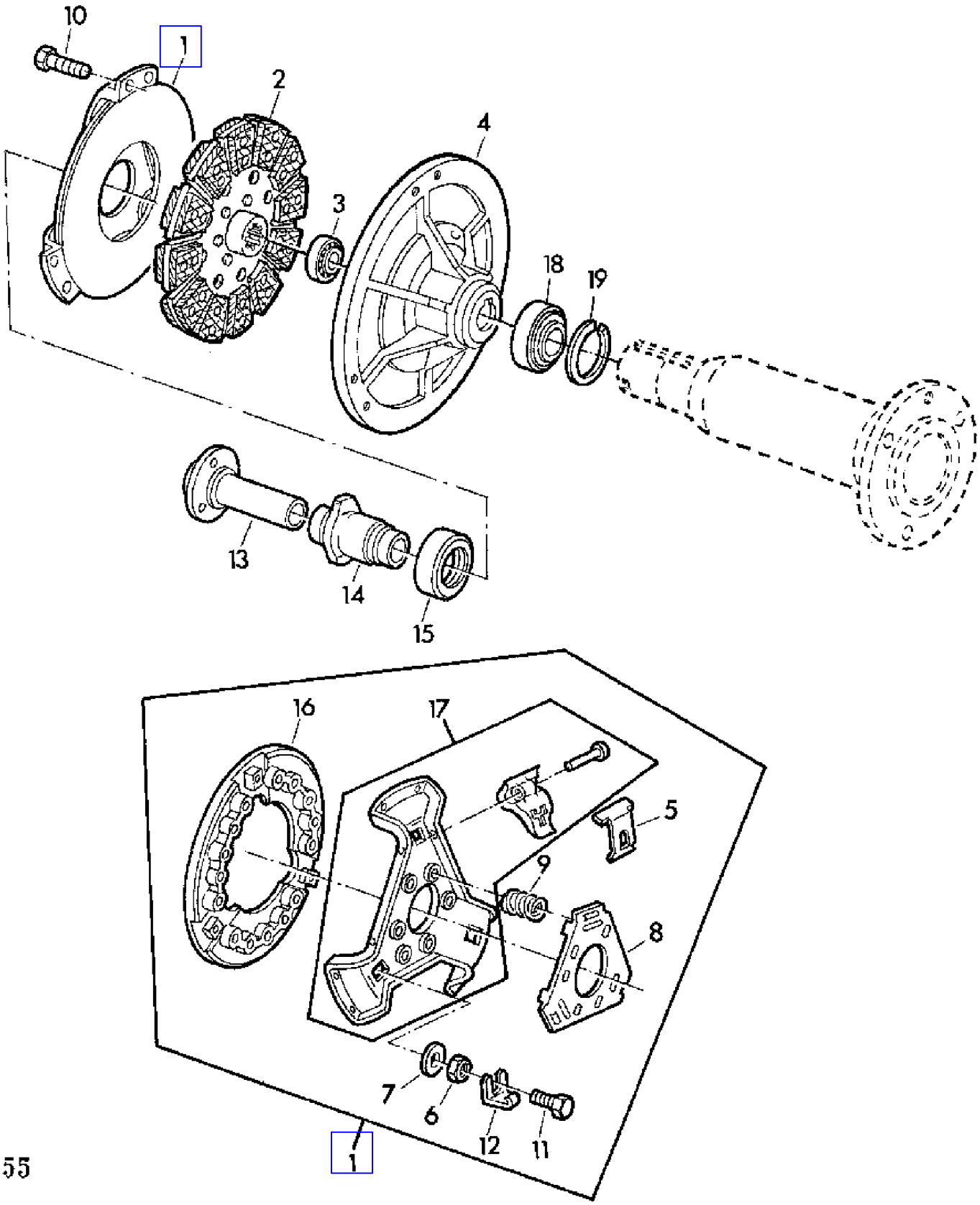

COPYRIGHT©1994 - 2008 DEERE & COMPANY Moline, Illinois All rights reserved

(1I05) CLUTCH
EMBRAYAGE
KUPPLUNG
FRIZIONE
EMBRAGUE
KOPPLING

KEY	PART NO.	PART NAME	QTY	SERIAL NO.	975	975HY/4	REMARKS
1	AH84956	CLUTCH	1		X		ASSY
2	AZ30976	CLUTCH DISK	1		X		(SUB FOR AZ24248)
3	AZ20825	BALL BEARING	1		X		
4	Z11389	CLUTCH PLATE	1		X		(SUB FOR H84673)
5	T35298	LINK	3		X		
6	H81537	NUT	3		X		
7	H81535	WASHER	3		X		
8	T35300	RING	1		X		
9	H85363	SPRING	6		X		
10	19H1936	CAP SCREW	6		X		3/8" X 3/4"
11	H81534	CAP SCREW	3		X		
12	H81536	CLIP	3		X		
13	Z10974	HUB	1		X		
14	Z10975	HOUSING	1		X		
15	JD39117	THROW-OUT BEARING	1		X		
16	H85361	CLUTCH PLATE	1		X		
17	AH86586	PLATE	1		X		ASSY
18	JD10087	BALL BEARING	1		X		
19	40M1871	SNAP RING	1		X		

COPYRIGHT©1994 - 2008 DEERE & COMPANY Moline, Illinois All rights reserved

(2D24) CLUTCH ATTACHMENT FOR HYDRAULIC LINE
RACCORD DE CANALISATION HYDRAULIQUE
KUPPLUNGSSTUECK FUER HYDRAULIKLEITUNG
RACCORDO DI TUBAZIONE IDRAULICA
ACOPLAMIENTO PARA TUBERIA HIDRAULICA
KOPPLING FOR HYDRAULLEDNING

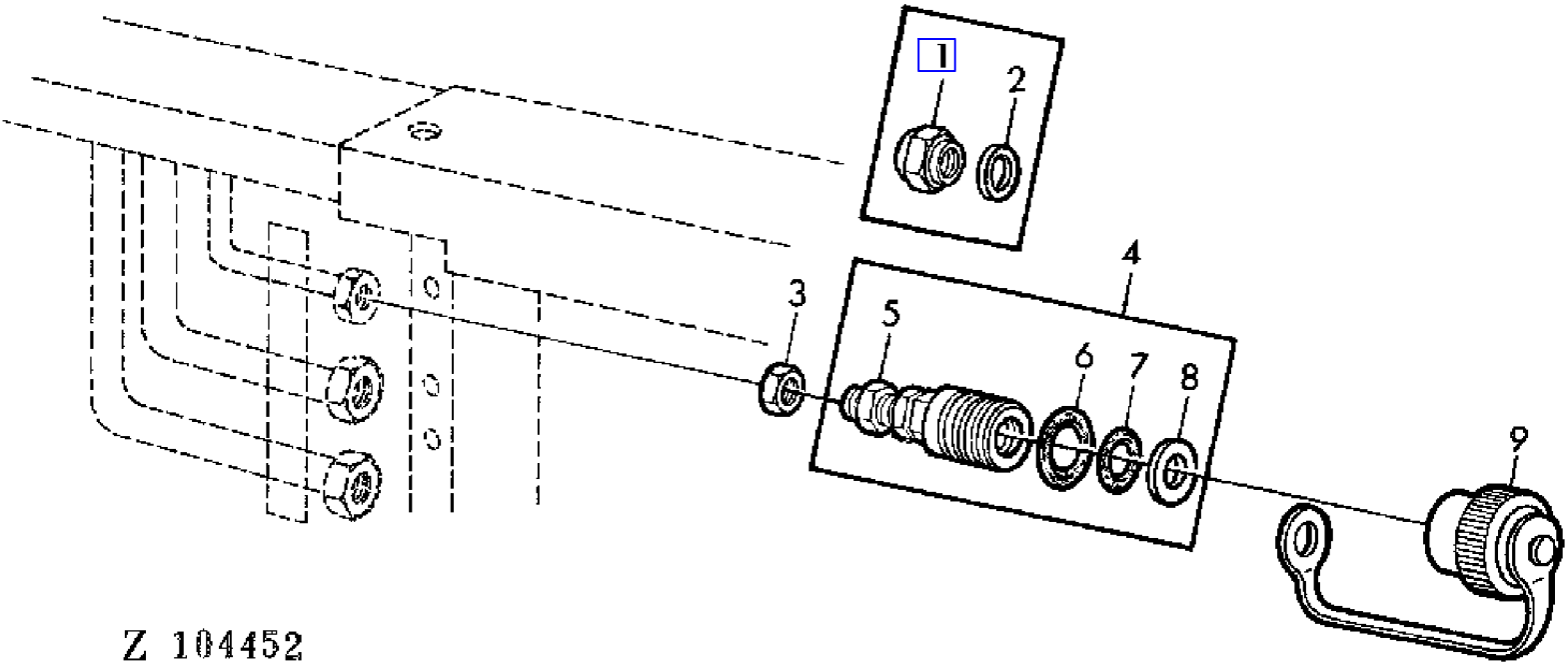

COPYRIGHT©1994 - 2008 DEERE & COMPANY Moline, Illinois All rights reserved

(2D24) CLUTCH ATTACHMENT FOR HYDRAULIC LINE
RACCORD DE CANALISATION HYDRAULIQUE
KUPPLUNGSSTUECK FUER HYDRAULIKLEITUNG
RACCORDO DI TUBAZIONE IDRAULICA
ACOPLAMIENTO PARA TUBERIA HIDRAULICA
KOPPLING FOR HYDRAULLEDNING

KEY	PART NO.	PART NAME	QTY	SERIAL NO.	975	975HY/4	REMARKS
1	Z36276	ADAPTER	1	- XXXX	X	X	(A) (FOR AZ25220)
2	51M4236	RING	1	- XXXX	X	X	(A) 14 X 18 MM (FOR AZ25220)
3	14H832	NUT	1		X	X	9/16"
4	AZ34272	EXTERNAL HALF COUPLER	1		X	X	(A) (SUB FOR AZ25220)
5	14H812	NUT	1		X	X	3/8"
6	Z29863	O-RING	1		X	X	
7	Z29864	O-RING	1		X	X	
8	Z29865	BACK-UP RING	1		X	X	
9	Z29904	COVER	1		X	X	

(A) WITH U.S.CUTTING PLATFORMS ONLY
UNIQUEMENT POUR PLATES-FORMES DE COUPE US
NUR BEI US-SCHNEIDWERKEN
SOLO PER PIATTAFORME DI TAGLIO US
PLATAFORMAS DE CORTE EE.UU.SOLAMENTE
ENDAST FOR US SKARBORD

COPYRIGHT©1994 - 2008 DEERE & COMPANY Moline, Illinois All rights reserved

(2C06) CLUTCH CYLINDER
CYLINDRE D'EMBRAYAGE
HYDRAULIKZYLINDER FUER KUPPLUNG
CILINDRO SECONDARIO FRIZIONE
CILINDRO HIDRAULICO DEL EMBRAGUE
KOPPLINGENS HYDRAULCYLINDER

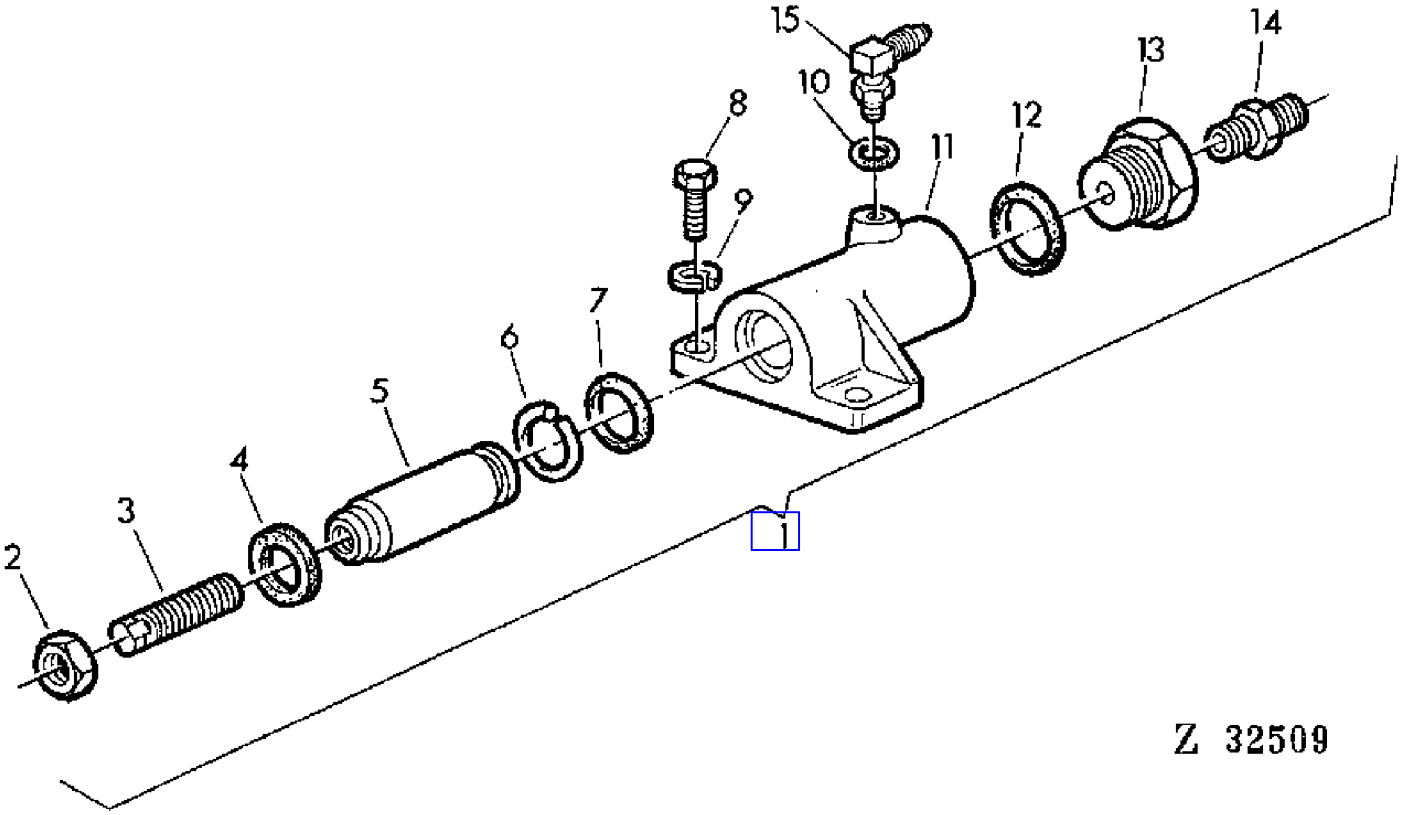

COPYRIGHT©1994 - 2008 DEERE & COMPANY Moline, Illinois All rights reserved

(2C06) CLUTCH CYLINDER
CYLINDRE D'EMBRAYAGE
HYDRAULIKZYLINDER FUER KUPPLUNG
CILINDRO SECONDARIO FRIZIONE
CILINDRO HIDRAULICO DEL EMBRAGUE
KOPPLINGENS HYDRAULCYLINDER

KEY	PART NO.	PART NAME	QTY	SERIAL NO.	975	975HY/4	REMARKS
1	AZ27757	HYDRAULIC CYLINDER	1		X		INCL KEYS 2-7,10-15 (SUB FOR AZ23785)
2	14H821	NUT	1		X		5/8"
3	Z30200	SET SCREW	1		X		
4	Z30207	SCRAPER RING	1		X		
5	Z30210	PLUNGER	1		X		
6	40M6801	SNAP RING	1		X		2,5 X 32 MM
7	R29463	O-RING	1		X		(SUB FOR R29354)
8	19H1731	CAP SCREW	2		X		3/8" X 1"
9	12H304	LOCK WASHER	2		X		3/8"
10	R26287	O-RING	1		X		
11	Z10697	HOUSING	1		X		
12	U13639	O-RING	1		X		
13	Z30201	FITTING	1		X		
14	Z34737	HYD. QUICK-CONNECT COUPLER	1		X		
15	AR26746	ELBOW FITTING	1		X		

COPYRIGHT©1994 - 2008 DEERE & COMPANY Moline, Illinois All rights reserved

(1I02) CLUTCH HOUSING,DRIVE SHEAVE
CARTER D'EMBRAYAGE,POULIE DE COMMANDE
KUPPLUNGSGEHAEUSE,ANTRIEBSSCHEIBE
SCATOLA FRIZIONE,PULEGGIA DI COMANDO
CARTER DEL EMBRAGUE,POLEA DE ACCIONAMIENTO
KOPPLINGSHUS,DRIVREMSKIVA

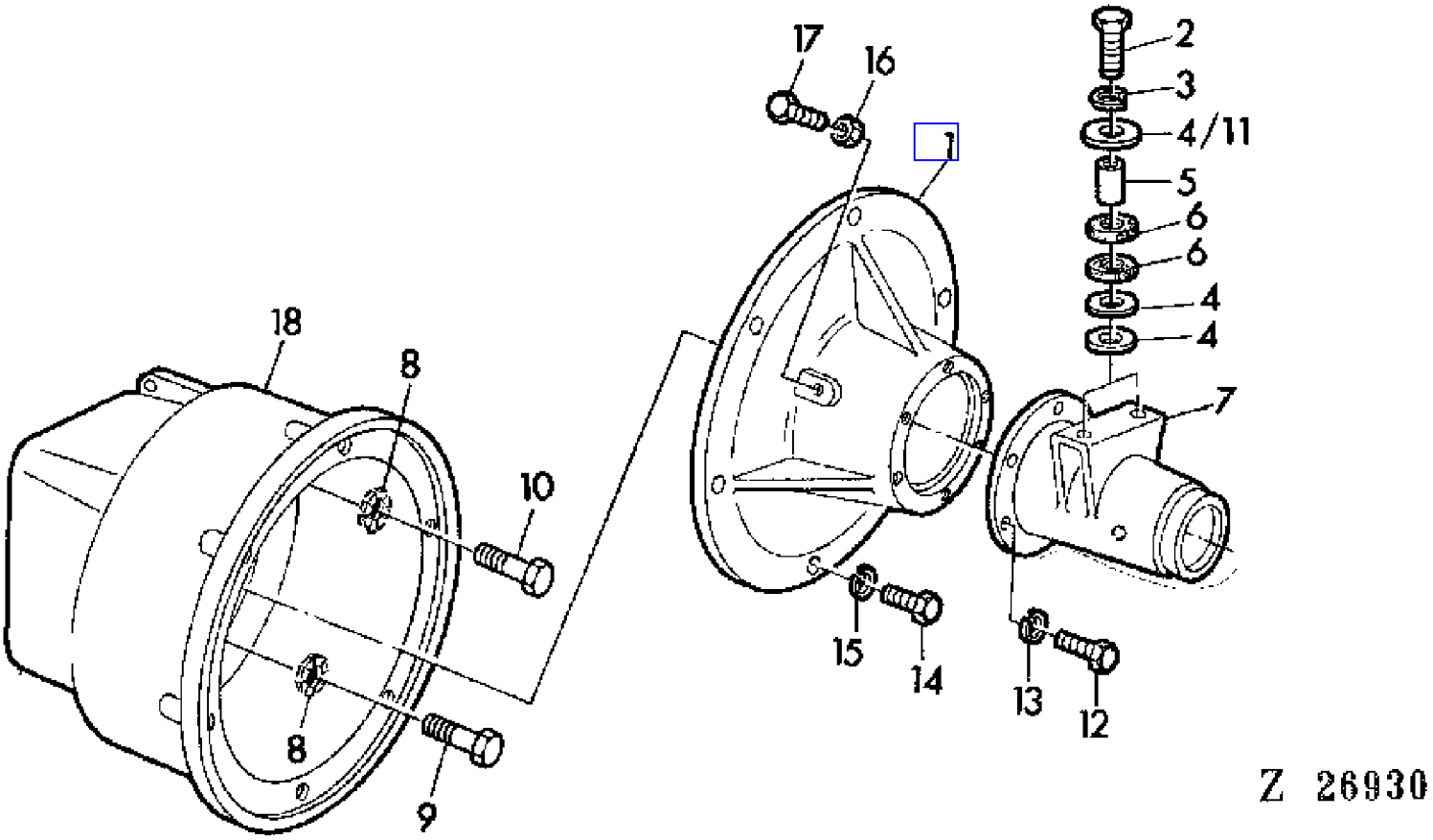

COPYRIGHT©1994 - 2008 DEERE & COMPANY Moline, Illinois All rights reserved

(1I02) CLUTCH HOUSING,DRIVE SHEAVE
CARTER D'EMBRAYAGE,POULIE DE COMMANDE
KUPPLUNGSGEHAEUSE,ANTRIEBSSCHEIBE
SCATOLA FRIZIONE,PULEGGIA DI COMANDO
CARTER DEL EMBRAGUE,POLEA DE ACCIONAMIENTO
KOPPLINGSHUS,DRIVREMSKIVA

KEY	PART NO.	PART NAME	QTY	SERIAL NO.	975	975HY/4	REMARKS
1	Z10971	FLANGE	1		X		
2	19H2060	CAP SCREW	2		X		1/2" X 3"
3	12H301	LOCK WASHER	2		X		1/1"
4	Z27661	WASHER	8		X		AR
5	Z32610	SPACER	2		X		
6	P46413	ABSORBER	4		X		
7	Z11586	HOUSING	1		X		(SUB FOR Z10973)
8	H20551	LOCK WASHER	5		X		
9	19H1740	CAP SCREW	3		X		7/16" X 1-3/5"
10	19H1821	CAP SCREW	2		X		7/16" X 1-1/4"
11	24M7102	WASHER	2		X		AR, 14 MM
12	19H1905	CAP SCREW	6		X		5/16" X 1"
13	12M7008	LOCK WASHER	6		X		8MM
14	19H2461	CAP SCREW	6		X		3/8" X 1-3/4"
15	12H304	LOCK WASHER	6		X		3/8"
16	14H785	NUT	2		X		5/16"
17	Z34710	CAP SCREW	2		X		
18	Z10970	HOUSING	1	- 024597	X		(ORD W/ (2) Z35658, (2) Z35659)
	Z11204	HOUSING	1	024598 -	X		(ORD W/ (2) Z35658, (2) Z35659)

COPYRIGHT©1994 - 2008 DEERE & COMPANY Moline, Illinois All rights reserved

(2C04) CLUTCH MASTER CYLINDER
MAITRE-CYLINDRE DE L'EMBRAYAGE
KUPPLUNGSHAUPTZYLINDER
CILINDRO PRINCIPALE FRIZIONE
CILINDRO PRINCIPAL DE EMBRAGUE
KOPPLINGENS HUVUDCYLINDER

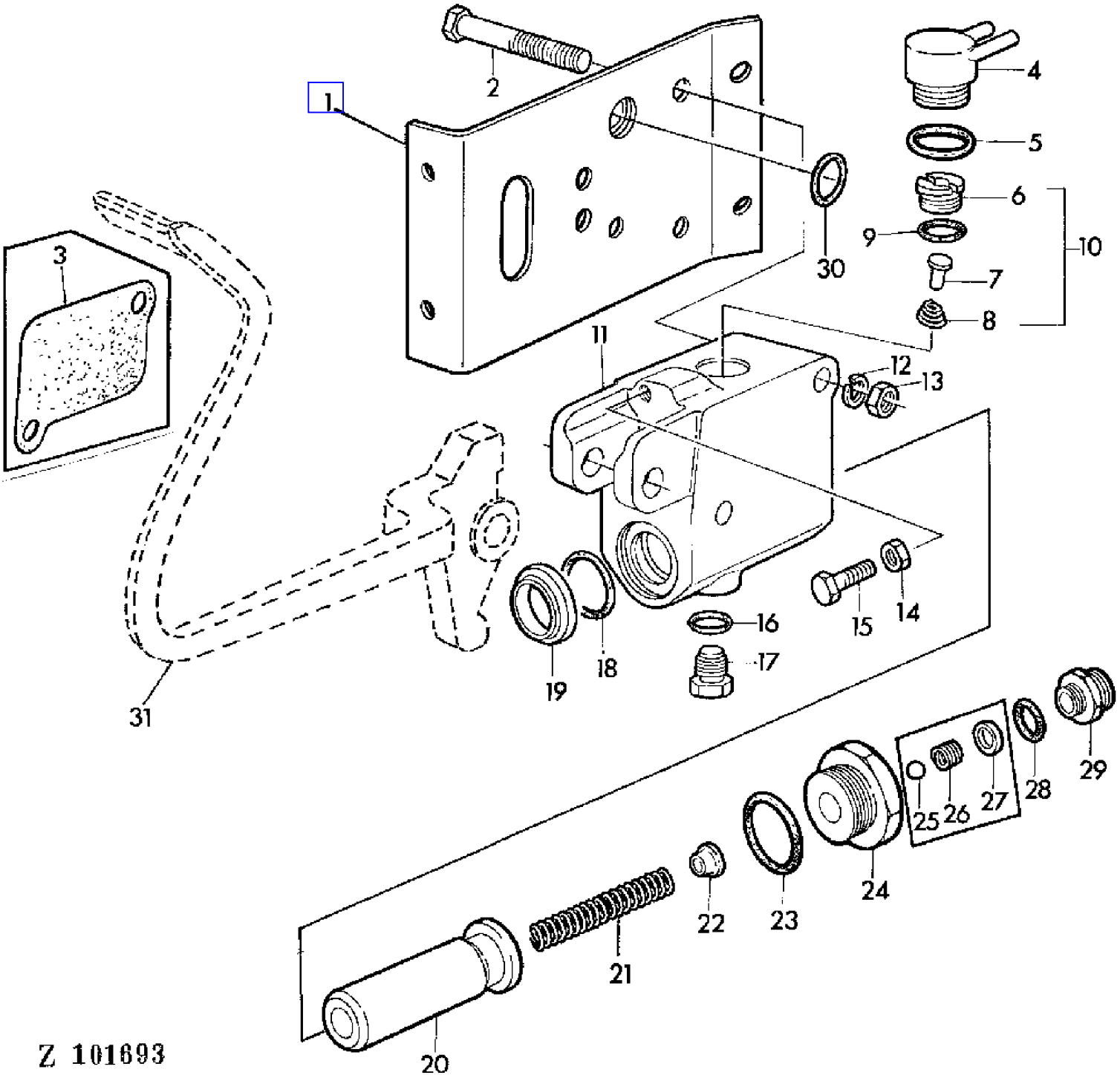

COPYRIGHT©1994 - 2008 DEERE & COMPANY Moline, Illinois All rights reserved

(2C04) CLUTCH MASTER CYLINDER
MAITRE-CYLINDRE DE L'EMBRAYAGE
KUPPLUNGSHAUPTZYLINDER
CILINDRO PRINCIPALE FRIZIONE
CILINDRO PRINCIPAL DE EMBRAGUE
KOPPLINGENS HUVUDCYLINDER

KEY	PART NO.	PART NAME	QTY	SERIAL NO.			975	975HY/4	REMARKS
1	Z30213	BRACKET	1		-	012311	X		(ORD Z36749 W/ (2) Z36746)
	Z36749	BRACKET	1	012312	-		X		
2	19M7349	CAP SCREW	2				X		M12 X 95
3	Z36746	GASKET	1		-	012311	X		(SUB FOR Z30202)
4	AZ21028	ADAPTER	1				X		INCL KEY 5 (SUB FOR Z30209)
5	A4730R	O-RING	1				X		
6	.....	SEAT	1				X		NSEP (ORD KEY 10)
7	.....	POPPET	1				X		NSEP (ORD KEY 10)
8	.....	SPRING	1				X		NSEP (ORD KEY 10)
9	R26906	O-RING	1				X		
10	AL23836	CHECK VALVE	1				X		INCL KEYS 6,7,8
11	Z11101	HOUSING	1		-	026722	X		(SUB FOR Z10695)
	Z11272	HOUSING	1	026723	-		X		
	Z11101	HOUSING	1				X		(A)
12	12M7014	LOCK WASHER	2				X		12 MM
13	14M7031	NUT	2				X		M12
14	14H812	NUT	1				X		3/8"
15	19H1732	CAP SCREW	1				X		3/8" X 1-1/4"
16	R26375	O-RING	1				X		
17	Z30204	PLUG	1				X		
18	R29354	O-RING	1				X		(SUB FOR R29463)
19	Z30207	SCRAPER RING	1				X		
20	Z30212	PLUNGER	1				X		
21	T21817	SPRING	1		-	026722	X		
	Z39415	COMPRESSION SPRING	1	026723	-		X		
22	T21815	RETAINER	1				X		
23	U13639	O-RING	1				X		
24	Z30211	FITTING	1				X		
25	400R	BALL	1		-	003054	X		
26	T21814	SPRING	1		-	003054	X		
27	Z30205	SEAT	1		-	003054	X		
28	R26448	O-RING	1				X		
29	Z42193	FITTING	1				X		(SUB FOR Z32964)
30	Z34697	O-RING	1	012312	-		X		
31	.....	PEDAL	1				X		SECTION 50

(A) FOR REVERSER CLUTCH
POUR REVERMATIC
FUER WECHSELKUPPLUNG
PER INVERSORE REVERMATIC
PARA EMBRAGUE REVERMATIC
FOR FRAM-BACK KOPPLING

COPYRIGHT©1994 - 2008 DEERE & COMPANY Moline, Illinois All rights reserved

(1I03) CLUTCH OPERATING LINKAGE
TIMONERIE D'EMBRAYAGE
KUPPLUNGSAUSRUECKUNG
LEVE D'AZIONAMENTO DELLA FRIZIONE
MECANISMO DE MANDO DE EMBRAQUE
MANOVERLANKAGE FOR KOPPLINGEN

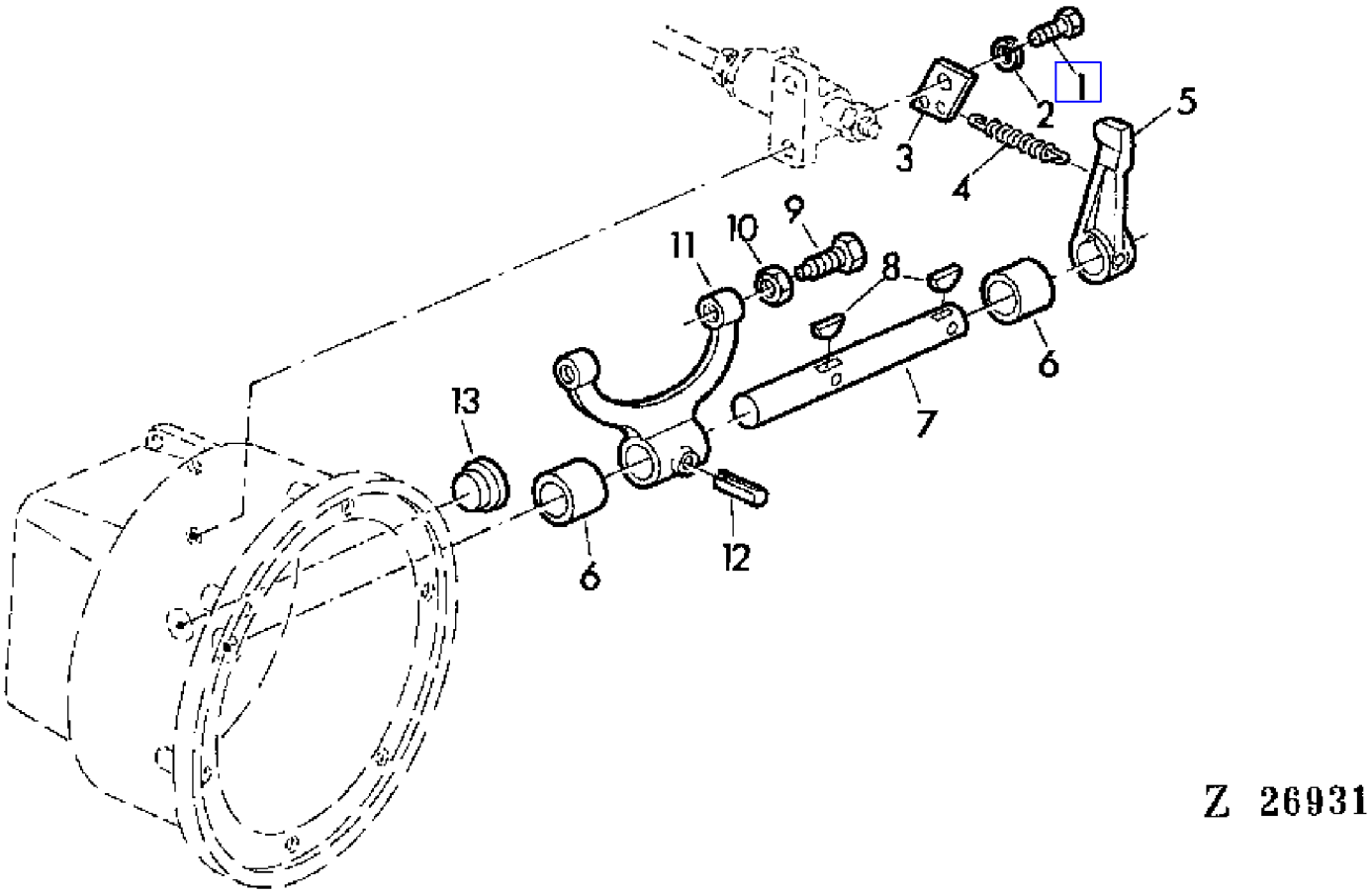

COPYRIGHT©1994 - 2008 DEERE & COMPANY Moline, Illinois All rights reserved

(1I03) CLUTCH OPERATING LINKAGE
TIMONERIE D'EMBRAYAGE
KUPPLUNGSAUSRUECKUNG
LEVE D'AZIONAMENTO DELLA FRIZIONE
MECANISMO DE MANDO DE EMBRAQUE
MANOVERLANKAGE FOR KOPPLINGEN

KEY	PART NO.	PART NAME	QTY	SERIAL NO.	975	975HY/4	REMARKS
1	19H1765	CAP SCREW	2		X		3/8" X 1-3/4"
2	12H304	LOCK WASHER	2		X		3/8"
3	Z34721	RETAINER	1		X		
4	Z30447	SPRING	1		X		
5	Z10976	LEVER	1		X		
6	Z21764	SPACER	2		X		OD = 32 MM
	Z35658	SPACER	2		X		OD = 37 MM
7	Z34711	SHAFT	1		X		
8	26H41	SHAFT KEY	2		X		
9	22M2088	SET SCREW	2		X		M6 X 25
10	14M7027	NUT	2		X		M6
11	Z10710	FORK	1		X		
12	34H316	SPRING PIN	2		X		1/2"
13	30M7000	CAP	1	- 003450	X		
	Z35659	PLUG	1	003451 -	X		

COPYRIGHT©1994 - 2008 DEERE & COMPANY Moline, Illinois All rights reserved

(1I11) CLUTCH OPERATING LINKAGE,DUAL-STAGE CLUTCH
TIMONERIE D'EMBRAYAGE,EMBRAYAGE DOUBLE EFFET
KUPPLUNGSAUSRUECKUNG,ZWEIFACHKUPPLUNG
LEVE D'AZIONAMENTO DELLA FRIZIONE,FRIZIONE A DOPPIO STADIO
MECANISMO DE MANDO DE EMBRAQUE,EMBRAGUE DOBLE
MANOVERLANKAGE FOR KOPPLINGEN,TVASTEGSKOPPLING

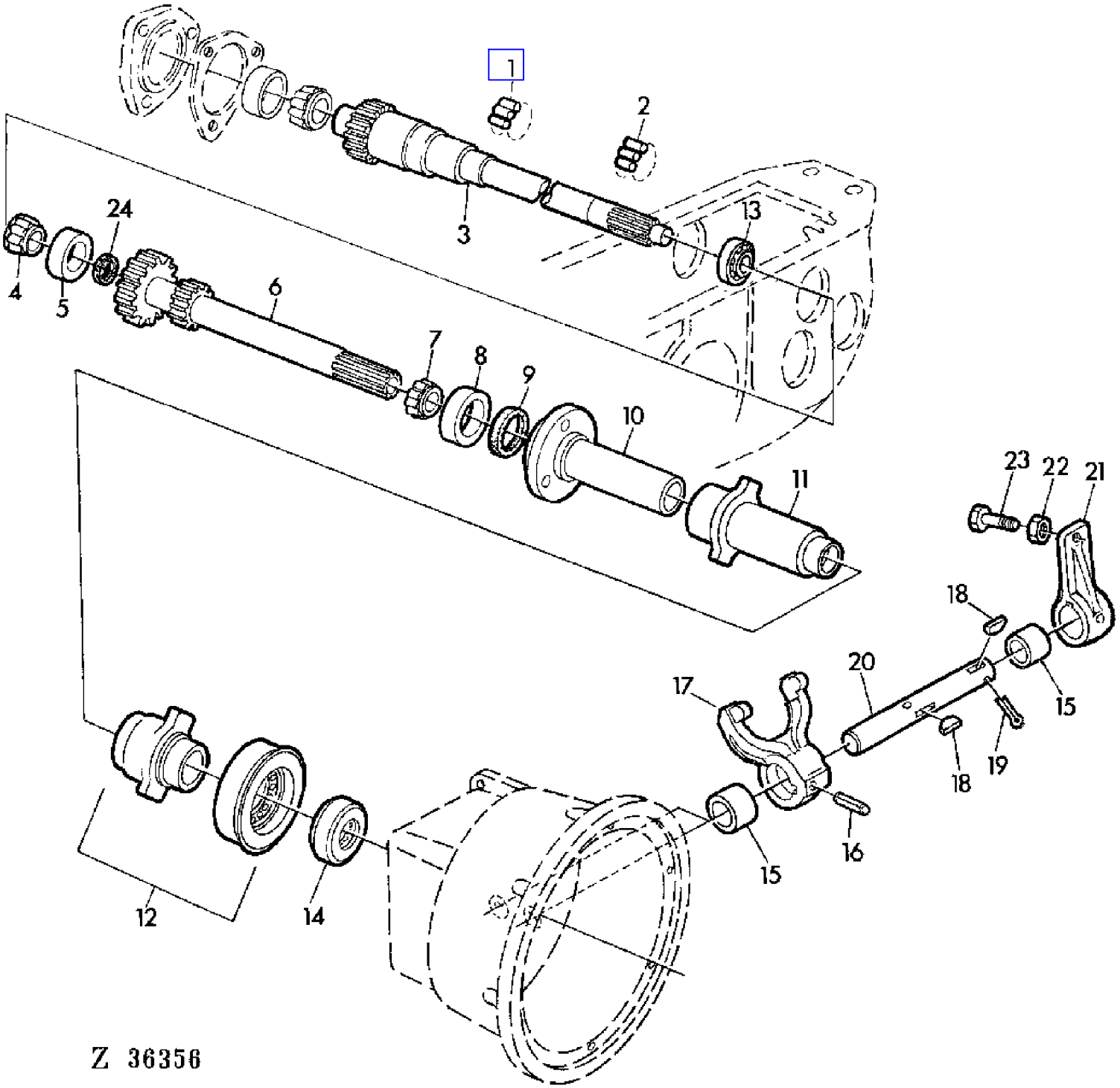

COPYRIGHT©1994 - 2008 DEERE & COMPANY Moline, Illinois All rights reserved

(1I11) CLUTCH OPERATING LINKAGE,DUAL-STAGE CLUTCH
TIMONERIE D'EMBRAYAGE,EMBRAYAGE DOUBLE EFFET
KUPPLUNGSAUSRUECKUNG,ZWEIFACHKUPPLUNG
LEVE D'AZIONAMENTO DELLA FRIZIONE,FRIZIONE A DOPPIO STADIO
MECANISMO DE MANDO DE EMBRAQUE,EMBRAGUE DOBLE
MANOVERLANKAGE FOR KOPPLINGEN,TVASTEGSKOPPLING

KEY	PART NO.	PART NAME	QTY	SERIAL NO.	975	975HY/4	REMARKS
1	JD8898	NEEDLE BEARING	AR		X		
2	JD9929	BEARING	AR		X		
3	Z10716	SHAFT	1		X		
4	JD8988	BEARING CONE	1		X		
5	JD8271	BEARING CUP	1		X		
6	Z10713	SHAFT	1		X		
7	JD8179	BEARING CONE	1		X		
8	JD8220	BEARING CUP	1		X		
9	AZ19023	SEAL	1		X		
10	Z10974	HUB	1		X		
11	Z11039	HUB	1		X		
12	AZ24073	THRUST BEARING	1		X		ASSY
13	AZ20825	BALL BEARING	1		X		
14	AZ24125	THRUST BEARING	1		X		
15	Z35652	SPACER	4		X		OD = 37 MM
16	34M7044	SPRING PIN	2		X		6 X 15 MM
17	Z11037	FORK	2		X		
18	26M6787	SHAFT KEY	4		X		10 X 13 MM
19	11M7033	COTTER PIN	2		X		
20	Z35651	SHAFT	2		X		
21	Z11038	LEVER	2		X		
22	14M7140	NUT	2		X		M10
23	Z35028	CAP SCREW	2		X		
24	AH11010	SEAL	1		X		

COPYRIGHT©1994 - 2008 DEERE & COMPANY Moline, Illinois All rights reserved

(1I01) CLUTCH PEDAL
PEDALE D'EMBRAYAGE
KUPPLUNGSFUSSHEBEL
PEDALE FRIZIONE
PEDAL DEL EMBRAGUE
KOPPLINGSPEDAL

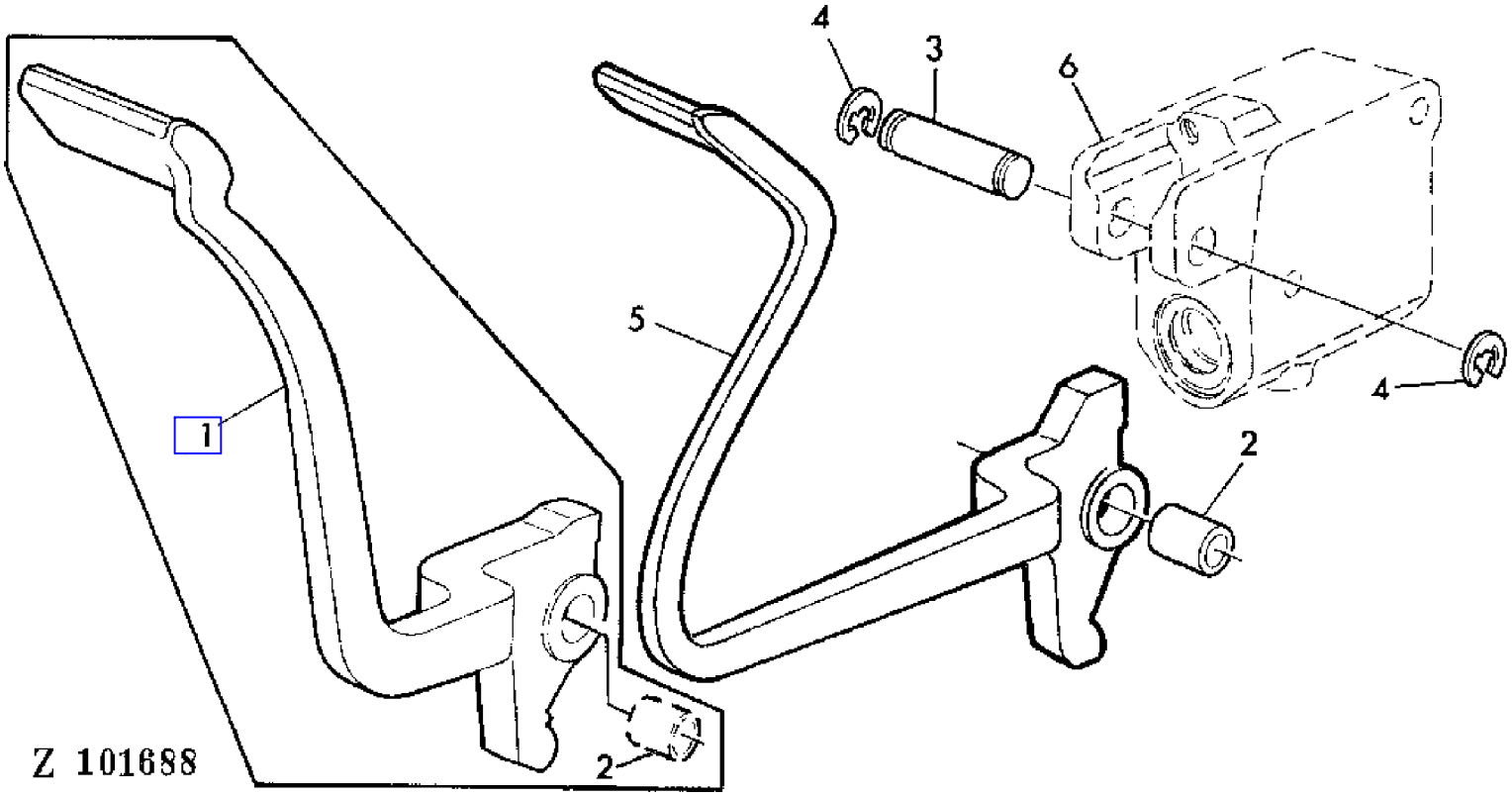

COPYRIGHT©1994 - 2008 DEERE & COMPANY Moline, Illinois All rights reserved

(1I01) CLUTCH PEDAL
PEDALE D'EMBRAYAGE
KUPPLUNGSFUSSHEBEL
PEDALE FRIZIONE
PEDAL DEL EMBRAGUE
KOPPLINGSPEDAL

KEY	PART NO.	PART NAME	QTY	SERIAL NO.		975	975HY/4	REMARKS
1	AZ24629	PEDAL	1		- 026722	X		INCL KEY 2 (SUB FOR AZ23725)
2	B177R	BUSHING	1			X		
3	Z30203	PIN	1			X		
4	F2863R	SNAP RING	2			X		
5	AZ29582	CHANNEL	1	026723	-	X		INCL KEY 2
	AZ29581	CHANNEL	1	026723	-	X		(A) INCL KEY 2
6	.....	HOUSING	1			X		SECTION 70

(A) FOR REVERSER CLUTCH
POUR REVERMATIC
FUER WECHSELKUPPLUNG
PER INVERSORE REVERMATIC
PARA EMBRAGUE REVERMATIC
FOR FRAM-BACK KOPPLING

COPYRIGHT©1994 - 2008 DEERE & COMPANY Moline, Illinois All rights reserved

(1D18) COLD WEATHER STARTING AID "THERMOSTART"
AIDE AU DEMARRAGE PAR TEMPS FROID "THERMOSTART"
KALTSTARTANLAGE "THERMOSTART"
DISPOSITIVO D'AVVIAMENTO A FREDDO "THERMOSTART"
DISPOSITIVO PARA EL ARRANQUE EN TIEMPO FRIO "THERMOSTART"
KALLSTARTSUTRUSTNING "THERMOSTART"

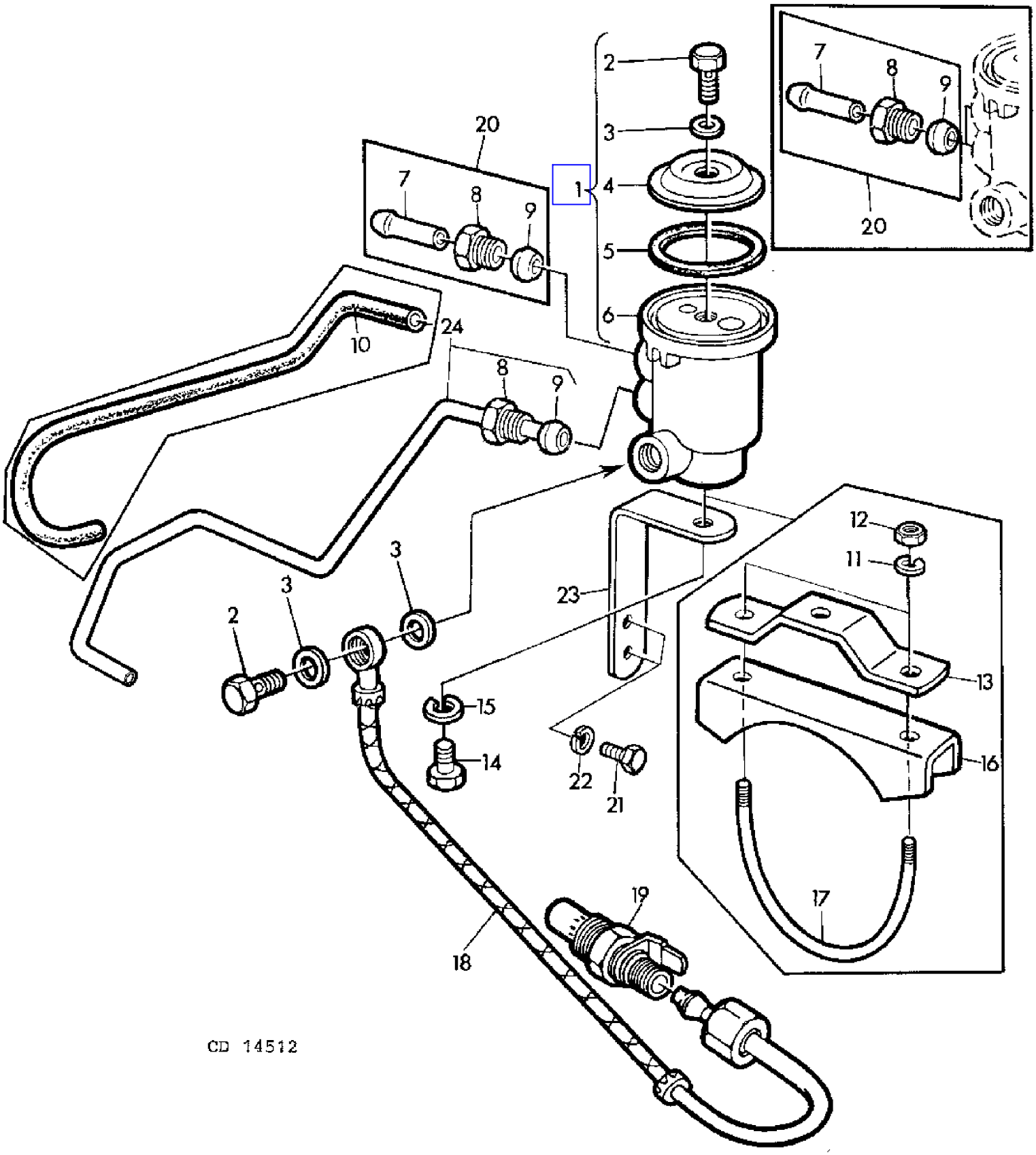

COPYRIGHT©1994 - 2008 DEERE & COMPANY Moline, Illinois All rights reserved

(1D18) COLD WEATHER STARTING AID "THERMOSTART"
AIDE AU DEMARRAGE PAR TEMPS FROID "THERMOSTART"
KALTSTARTANLAGE "THERMOSTART"
DISPOSITIVO D'AVVIAMENTO A FREDDO "THERMOSTART"
DISPOSITIVO PARA EL ARRANQUE EN TIEMPO FRIO "THERMOSTART"
KALLSTARTSUTRUSTNING "THERMOSTART"

KEY	PART NO.	PART NAME	QTY	SERIAL NO.	975	975HY/4	REMARKS
1	AT26140	RESERVOIR	1		X		ASSY, INCL KEYS 2-6 (SUB FOR DD11381)
2	CD12887	FITTING	2		X		
3	51M4230	RING	3		X		(SUB FOR CD12888)
4	T27974	COVER	1		X		
5	T27973	WASHER	1		X		
6	.....	CONTAINER	1		X		(ORD AT26140)
7	CD14805	HOSE FITTING	2		X		NSEP (ORD DD13407)
8	R62035	FITTING	2		X		NSEP (ORD AR94128, DD13407)
9	R62034	SLEEVE FITTING	2		X		
10	T28003	HOSE	2	- 490663	X		(A) NSEP (ORD R68281)
11	12H302	LOCK WASHER	2	- 006489	X		1/4"
12	14H786	NUT	2	- 006489	X		1/4"
13	CD13202	HOLDER	1	- 006489	X		
14	19H1894	CAP SCREW	1		X		3/8" X 3/4"
15	12H304	LOCK WASHER	1		X		3/8"
16	CD13203	RETAINER	1	- 006489	X		
17	CD13204	BAIL	1	- 006489	X		
18	AR65440	HOSE	1	- 410663	X		(A) LGTH = 258 MM (10.15")
	AR94126	HOSE	1	410664 -	X		(A) LGTH = 365 MM (14.37")
19	AR63105	BURNER	1		X		
20	DD13407	HOSE FITTING	2	- 410663	X		(A) KIT, INCL KEYS 7-9
	DD13407	HOSE FITTING	1	410664 -	X		(A) KIT, INCL KEYS 7-9
21	19H2020	CAP SCREW	2	006490 -	X		5/16" X 1/2"
22	12H303	LOCK WASHER	2	006490 -	X		5/16"
23	CD14873	HOLDER	1	006490 -	X		
24	AR94128	FUEL LINE	1	410664 -	X		(A) INCL KEYS 8,9
..	R68281	BULK HOSE	AR		X		LGTH = 1,5 M (59.05") (SUB FOR AT32064)

(A) ENGINE SERIAL NUMBER
NO SERIE MOTEUR
MOTOR-SERIEN-NR.
NUM.SERIE DEL MOTORE
NUM.SERIE DEL MOTOR
MOTORNS SERIENUMMER

COPYRIGHT©1994 - 2008 DEERE & COMPANY Moline, Illinois All rights reserved

(1D16) COLD WEATHER STARTING AID"THERMOSTART"
AIDE AU DEMARRAGE PAR TEMPS FROID"THERMOSTART"
KALTSTARTANLAGE"THERMOSTART"
DISPOSITIVO D'AVVIAMENTO A FREDDO"THERMOSTART"
DISPOSITIVO PARA EL ARRANQUE EN TIEMPO FRIO"THERMOSTAR
KALLSTARTSUTRUSTNING"THERMOSTART"

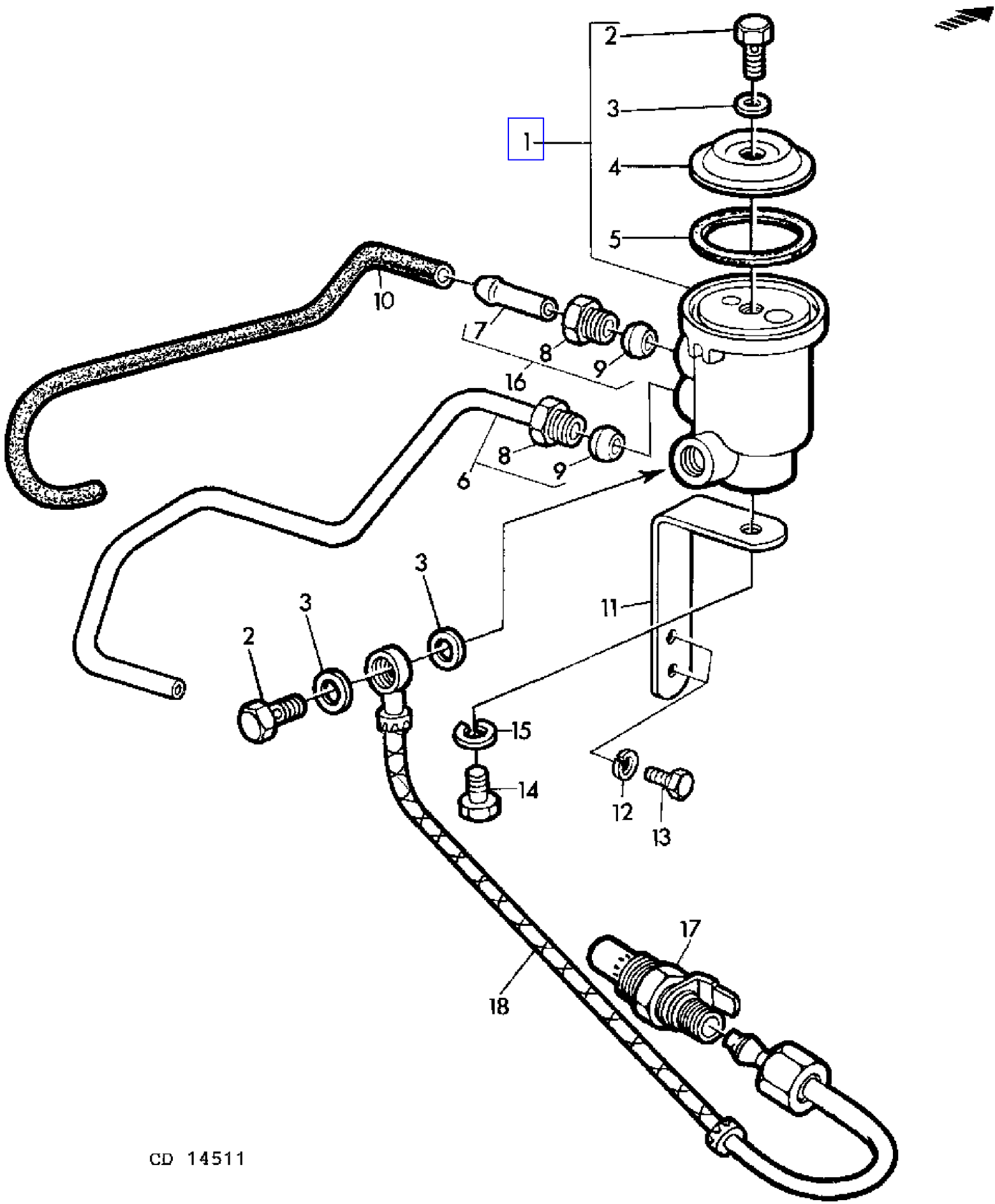

COPYRIGHT©1994 - 2008 DEERE & COMPANY Moline, Illinois All rights reserved

(1D16) COLD WEATHER STARTING AID"THERMOSTART"
AIDE AU DEMARRAGE PAR TEMPS FROID"THERMOSTART"
KALTSTARTANLAGE"THERMOSTART"
DISPOSITIVO D'AVVIAMENTO A FREDDO"THERMOSTART"
DISPOSITIVO PARA EL ARRANQUE EN TIEMPO FRIO"THERMOSTAR
KALLSTARTSUTRUSTNING"THERMOSTART"

KEY	PART NO.	PART NAME	QTY	ENGINE SERIAL NO.	975	975HY/4	REMARKS
1	AT26140	RESERVOIR	1			X	ASSY, INCL KEYS 2-5 (SUB FOR DD11381)
2	CD12887	FITTING	2			X	
3	51M4230	RING	3			X	(SUB FOR CD12888)
4	T27974	COVER	1			X	
5	T27973	WASHER	1			X	
6	AR94128	FUEL LINE	1			X	ASSY, INCL KEYS 8,9
7	CD14805	HOSE FITTING	1			X	NSEP (ORD DD13407)
8	R62035	FITTING	2			X	NSEP (ORD DD13407)
9	R62034	SLEEVE FITTING	2			X	NSEP (ORD DD13407)
10	T28003	HOSE	2			X	NSEP (ORD R68281)
11	CD14873	HOLDER	1			X	
12	12H303	LOCK WASHER	2			X	5/16"
13	19H2020	CAP SCREW	2			X	5/16" X 1/2"
14	19H1894	CAP SCREW	1			X	3/8" X 3/4"
15	12H304	LOCK WASHER	1			X	3/8"
16	DD13407	HOSE FITTING	1			X	KIT, INCL KEYS 7-9
17	AR63105	BURNER	1			X	
18	AR65440	HOSE	1	- 410663		X	LGTH = 258 MM (10.15")
	AR94126	HOSE	1	410664 -		X	LGTH = 365 MM (14.37")
..	R68281	BULK HOSE	AR			X	LGTH = 1,5 MM (59.05")

COPYRIGHT©1994 - 2008 DEERE & COMPANY Moline, Illinois All rights reserved

(3C24) COMPRESSOR-AIR CONDITIONED CAB
COMPRESSEUR-CABINE CLIMATISEE
KOMPRESSOR MIT KABINE MIT KLIMAANLAGE
COMPRESSORE-CABINA CONDIZIONATA
COMPRESOR-CABINA CON AIRE ACONDICIONADO
KOMPRESSOR-HYTT MED LUFTKONDITIONERING

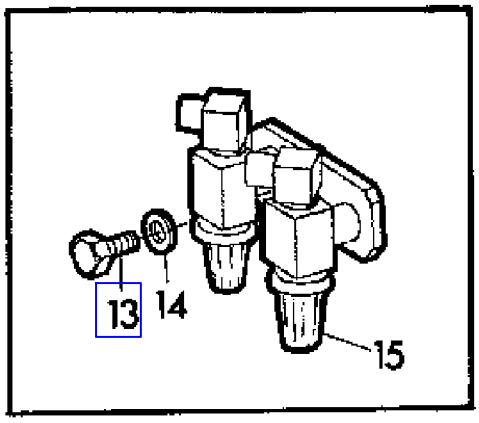

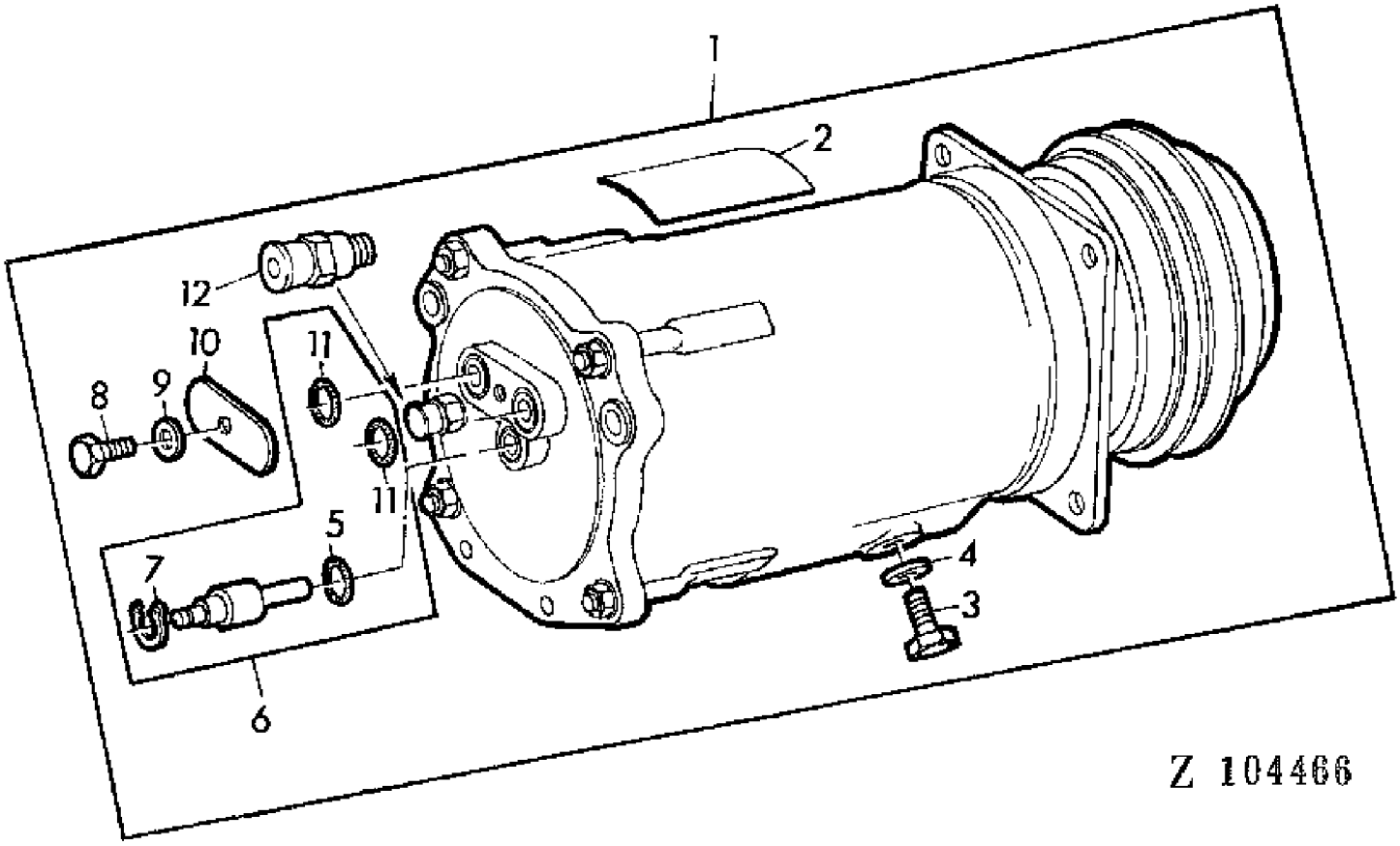

COPYRIGHT©1994 - 2008 DEERE & COMPANY Moline, Illinois All rights reserved

(3C24) COMPRESSOR-AIR CONDITIONED CAB
COMPRESSEUR-CABINE CLIMATISEE
KOMPRESSOR MIT KABINE MIT KLIMAANLAGE
COMPRESSORE-CABINA CONDIZIONATA
COMPRESOR-CABINA CON AIRE ACONDICIONADO
KOMPRESSOR-HYTT MED LUFTKONDITIONERING

KEY	PART NO.	PART NAME	QTY	SERIAL NO.	975	975HY/4	REMARKS
1	AR68802	COMPRESSOR	1		X		(ORD AR77343 OR TY6665)
	AR77343	COMPRESSOR	1		X	X	(ORD TY6665 OR AR92109) (SUB FOR AR68802)
	AR92109	COMPRESSOR	1		X	X	(SUB FOR AR77343)
	TY6665	COMPRESSOR	1		X	X	(A)
2	R42822	LABEL	1		X	X	
3	R47233	PLUG	1		X	X	
4	R47234	WASHER	1		X	X	
5	32240	O-RING	1		X	X	
6	AR78501	KIT	1		X	X	INCL KEYS 5,7,11
7	R63571	SNAP RING	1		X	X	
8	19H2522	CAP SCREW	1	- XXXX	X	X	AR, 3/8" X 2"
	19M7170	CAP SCREW	1	XXXX -	X	X	AR, M10 X 50
9	24H1884	WASHER	1		X	X	13/32" X 120"
10	R60171	STRAP	1		X	X	
11	R47235	O-RING	2		X	X	
12	AR49808	VALVE	1		X	X	
13	19H1938	CAP SCREW	1		X	X	3/8" X 13/16 (FOR AR68802)
14	12H304	LOCK WASHER	1		X	X	3/8" (FOR AR68802)
15	AR58283	VALVE	1		X	X	(FOR AR68802)

(A) SERVICE-EXCHANGE COMPRESSOR
COMPRESSEUR ECHANGE STANDARD
UEBERHOLTER AUSTAUSCHKOMPRESSOR
COMPRESSORE RITOCCATO
COMPRESOR DE RECAMBIO REACONDICIONADO
KOMPRESSOR (UTBYTE)

COPYRIGHT©1994 - 2008 DEERE & COMPANY Moline, Illinois All rights reserved

(4A15) CONCAVE
CONTRE-BATTEUR
DRESCHKORB
CONTROBATTITORE
CONCAVO
SLAGSKO

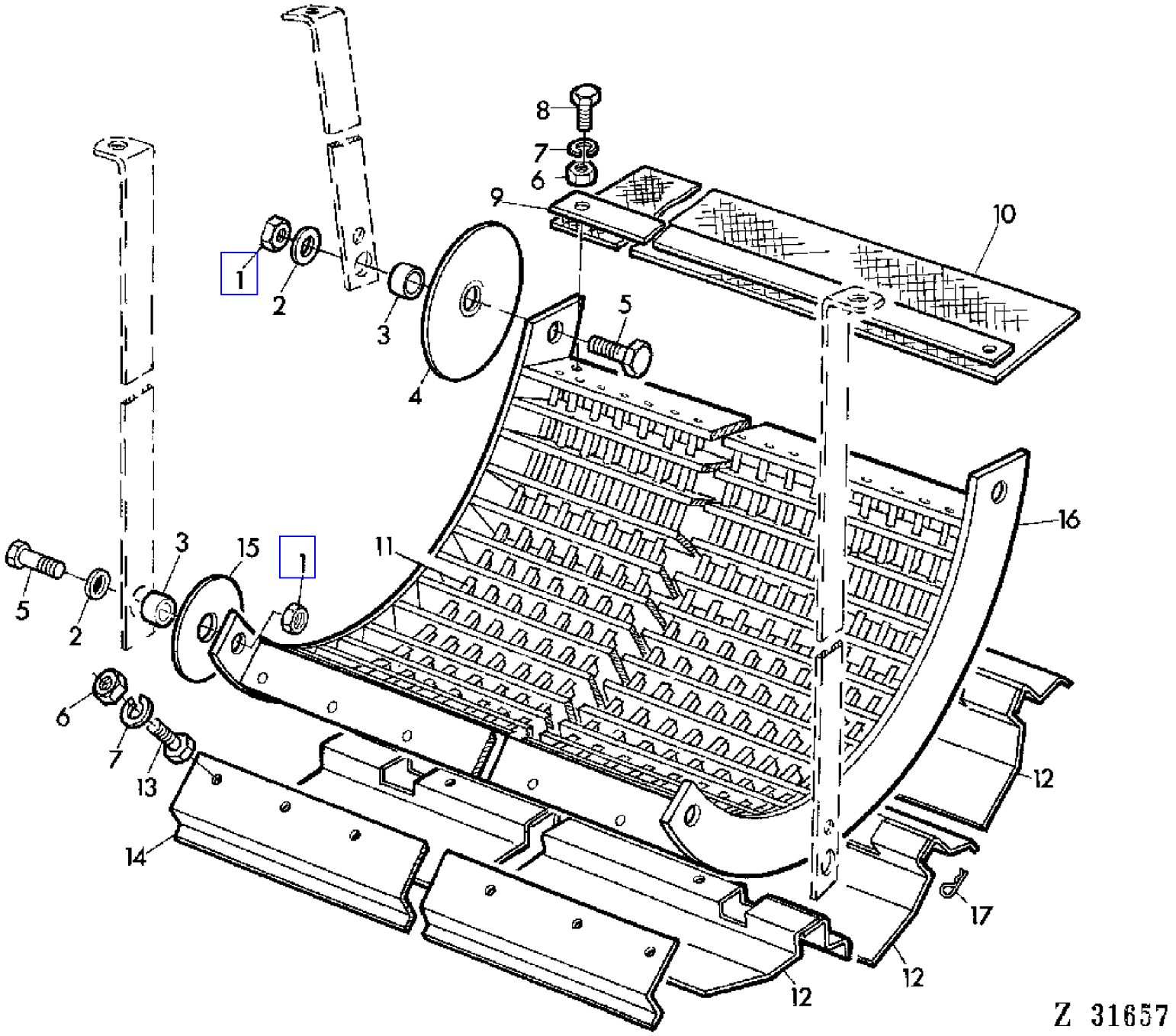

COPYRIGHT©1994 - 2008 DEERE & COMPANY Moline, Illinois All rights reserved

(4A15) CONCAVE
CONTRE-BATTEUR
DRESCHKORB
CONTROBATTITORE
CONCAVO
SLAGSKO

KEY	PART NO.	PART NAME	QTY	SERIAL NO.	975	975HY/4	REMARKS
1	14M7170	LOCK NUT	AR		X	X	M16
2	24M7048	WASHER	AR		X	X	16 MM
3	Z33976	BUSHING	4		X	X	
4	Z20084	COVER	2		X	X	
5	19M7397	CAP SCREW	AR		X	X	M16 X 50
6	14M7140	NUT	AR		X		(A) M10
	14M7029	NUT	AR		X	X	M8
7	12M7013	LOCK WASHER	AR		X		(A) 10 MM
	12M7008	LOCK WASHER	AR		X	X	8 MM
8	19M7377	CAP SCREW	AR		X		M8 X 28
	19M7168	CAP SCREW	AR		X		(A) M10 X 30
9	Z34329	STRAP	1	- 009831	X		
	Z34480	STRAP	1	- 009831	X		(A)
10	Z36526	GASKET	1	- 009831	X		
11	Z20064	WIRE	AR		X	X	
	Z25894	WIRE	AR		X	X	(A)
12	AZ13300	SHEET	AR		X	X	
	AZ15011	SHEET	AR		X	X	(A)
13	19M7139	CAP SCREW	AR		X	X	M8 X 20
14	Z28716	SHEET	AR		X	X	
15	Z27780	COVER	2		X	X	
16	AZ34046	CONCAVE	1		X	X	(SUB FOR AZ17518)
	AZ35457	CONCAVE	1		X	X	(A) (SUB FOR AZ17014)
17	L18955	QUICK LOCK PIN	AR		X	X	

(A) CONCAVE FOR MAIZE
CONTRE-BATTEUR MAIS
MAISDRESCHKORB
CONTROBATTITORE PER MAIS
CONCAVO PARA MAIZ
SLAGSKO FOR MAJS

COPYRIGHT©1994 - 2008 DEERE & COMPANY Moline, Illinois All rights reserved

(4A17) CONCAVE
CONTRE-BATTEUR-FIXATIONS
DRESCHKORBAUFHAENGUNG
CONTROBATTITORE-SOSPENSIONE
CONCAVO-SUSPEUSION
SLAGSKOUPPHANGNING

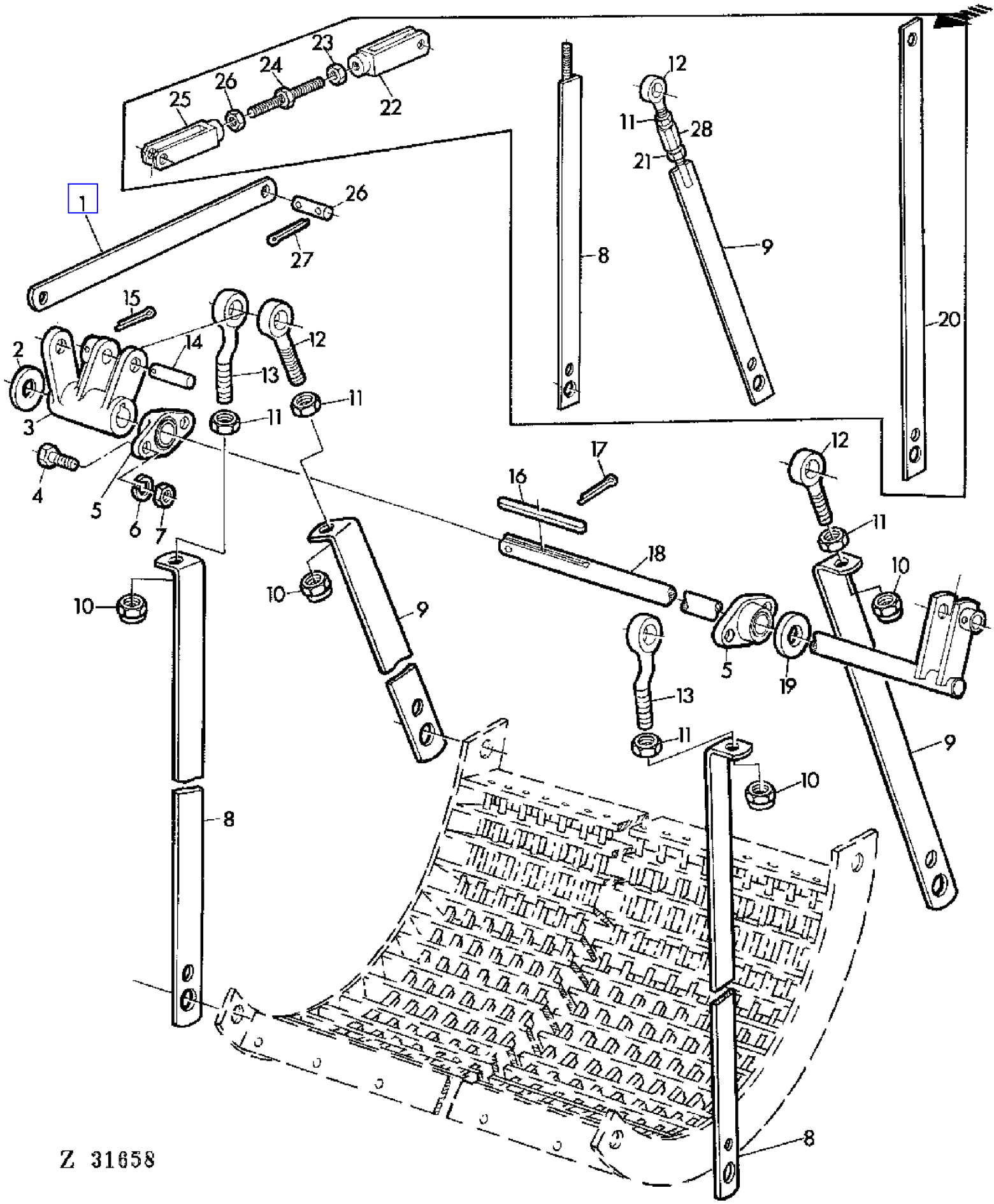

COPYRIGHT©1994 - 2008 DEERE & COMPANY Moline, Illinois All rights reserved

(4A17) CONCAVE
CONTRE-BATTEUR-FIXATIONS
DRESCHKORBAUFHAENGUNG
CONTROBATTITORE-SOSPENSIONE
CONCAVO-SUSPEUSION
SLAGSKOUPPHANGNING

KEY	PART NO.	PART NAME	QTY	SERIAL NO.			975	975HY/4	REMARKS
1	Z36726	STRAP	1	012312	-		X	X	
2	24M7115	WASHER	1				X	X	23 MM
3	Z10915	LEVER	1		-	012311	X		
	Z11100	LEVER	1	012312	-		X	X	
4	19M7163	CAP SCREW	4				X	X	M8 X 25
5	Z10994	BEARING	2				X	X	(SUB FOR Z10113)
6	12M7008	LOCK WASHER	AR				X	X	8 MM
7	14M7029	NUT	AR				X	X	M8
8	AZ23150	BRACE	1		-	012311	X		RH
	Z36728	BRACE	2	012312	-		X	X	
9	AZ22836	BRACE	2		-	012311	X		
	Z36729	BRACE	2	012312	-		X	X	
10	14M7170	LOCK NUT	4	012312	-		X	X	M16
11	14M7154	NUT	3		-	012311	X		M12
	14M7260	NUT	4	012312	-		X	X	M16
12	Z36545	EYEBOLT	3		-	012311	X		M12 X 75
	Z36731	EYEBOLT	2	012312	-		X	X	
13	Z36730	EYEBOLT	2	012312	-		X	X	
14	Z33990	PIN	3		-	012311	X		(SUB FOR 44M7026)
	Z36727	PIN	2	012312	-		X	X	
15	11M7023	COTTER PIN	AR				X	X	4 X 35 MM
16	49M4113	SHAFT KEY	1				X	X	8 X 7 X 80 MM
17	11M7039	COTTER PIN	AR				X	X	6 X 50 MM |
18	AZ22833	SHAFT	1		-	012311	X		
	AZ25680	SHAFT	1	012312	-		X	X	
19	Z33977	WASHER	1				X	X	
20	Z34273	BRACE	1		-	012311	X		LH
21	14M7146	NUT	3		-	012311	X		M12
22	54M7000	YOKE	1		-	012311	X		G12 X 48 MM
23	14M7154	NUT	2		-	012311	X		M12
24	AZ22828	TIGHTENER	1		-	012311	X		
25	Z24493	YOKE	1		-	012311	X		
26	Z24489	PIN	2				X	X	
27	11M7020	COTTER PIN	AR				X	X	4 X 25 MM
28	99M3833	TURNBUCKLE	3		-	012311	X		12 MM

COPYRIGHT©1994 - 2008 DEERE & COMPANY Moline, Illinois All rights reserved

(3B06) CONCAVE AND HAND BRAKE LEVER
CONTRE-BATTEUR ET LEVIER DU FREIN A MAIN
DRESCHKORB-UND HANDBREMSHEBEL
LEVE DEL FRENO A MANO E CONTROBATTITORE
PALANCAS DEL FRENO DE MANO Y DE AJUSTE DEL CONCAVO
MANOVERSPAKAR FOR SLAGSKO OCH HANDBROMS

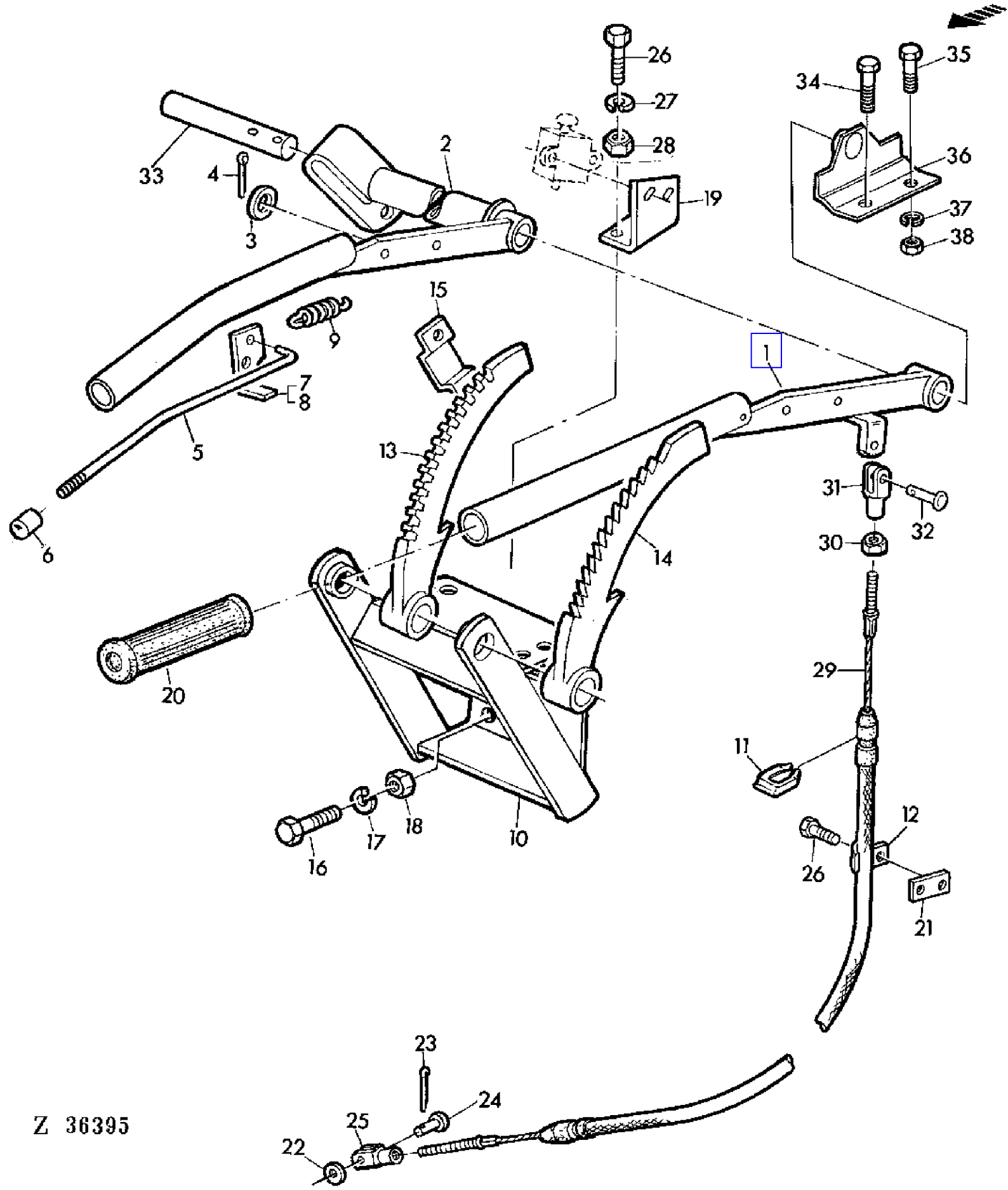

COPYRIGHT©1994 - 2008 DEERE & COMPANY Moline, Illinois All rights reserved

(3B06) CONCAVE AND HAND BRAKE LEVER
CONTRE-BATTEUR ET LEVIER DU FREIN A MAIN
DRESCHKORB-UND HANDBREMSHEBEL
LEVE DEL FRENO A MANO E CONTROBATTITORE
PALANCAS DEL FRENO DE MANO Y DE AJUSTE DEL CONCAVO
MANOVERSPAKAR FOR SLAGSKO OCH HANDBROMS

KEY	PART NO.	PART NAME	QTY	SERIAL NO.			975	975HY/4	REMARKS
1	AZ18548	HANDBRAKE	1		-	011231	X		(ORD AZ25483 W/ Z36579)
	AZ25483	HANDBRAKE LEVER	1	011232	-	022077	X	X	(A) (SUB FOR AZ18548)
	AZ28544	LEVER	1	022078	-	XXXX	X	X	(A) (ORD AZ31005 W/ Z41546)
	AZ31005	LEVER	1	XXXX	-		X	X	(A) (SUB FOR AZ28544)
2	AZ24622	LEVER	1		-	XXXX	X	X	(B) (ORD AZ31080 W/ Z41473) (SUB FOR AZ18555)
	AZ34647	BELLCRANK	1	XXXX	-		X	X	(B) (SUB FOR AZ24623, AZ31090)
3	24M7040	WASHER	2				X	X	11 MM
4	11M7014	COTTER PIN	2				X	X	M3 X 25
5	Z21822	HOOK BOLT	2				X	X	(FOR AZ24623, AZ25483, AZ28544)
	Z44389	HOOK BOLT	1				X	X	(FOR AZ31090)
	Z41473	HOOK BOLT	1	XXXX	-		X	X	(FOR AZ31090)
	Z41546	HOOK BOLT	1	XXXX	-		X	X	(FOR AZ31005)
6	Z21823	KNOB	2				X	X	
7	Z21833	LATCH	1				X	X	(A)
8	Z21834	LATCH	1				X	X	(B)
9	Z21613	EXTENSION SPRING	2				X	X	
10	AZ29888	BRACKET	1				X	X	(SUB FOR AZ27537, Z10752)
11	Z29162	CLAMP	2				X	X	
12	Z30685	CLAMP	1				X	X	
13	Z11323	SECTOR	1				X	X	(SUB FOR Z10248)
14	Z11324	SECTOR	1				X	X	(SUB FOR Z10674)
15	Z29945	BRACKET	2				X	X	
16	19M7163	CAP SCREW	3				X	X	M8 X 25
17	12M7008	LOCK WASHER	5				X	X	8 MM
18	14M7029	NUT	5				X	X	M8
19	Z29946	PLATE	1		-	011231	X	X	
	Z36579	HOLDER	1	011232	-		X	X	
20	Z26789	GRIP	1				X	X	(SUB FOR Z26791)
21	Z34870	STRAP	1				X	X	
22	24M7106	WASHER	1				X	X	10 MM
23	11M7019	COTTER PIN	1				X	X	4 X 20 MM
24	Z24487	PIN	1				X	X	
25	54M4421	YOKE	1				X	X	10 X 20 MM
26	19M7375	CAP SCREW	6				X	X	M6 X 18
27	12M7012	LOCK WASHER	7				X	X	6 MM
28	14M7027	NUT	9				X	X	M6
29	AZ21464	PUSH PULL CABLE	1				X	X	

(A) HAND BRAKE
FREIN A MAIN
HANDBREMSE
FRENO A MANO
FRENO DE MANO
HANDBROMS

(B) CONCAVE
CONTRE-BATTEUR
DRESCHKORB
CONTROBATTITORE
CONCAVO
SLAGSKO

COPYRIGHT©1994 - 2008 DEERE & COMPANY Moline, Illinois All rights reserved

(3B06) CONCAVE AND HAND BRAKE LEVER
CONTRE-BATTEUR ET LEVIER DU FREIN A MAIN
DRESCHKORB-UND HANDBREMSHEBEL
LEVE DEL FRENO A MANO E CONTROBATTITORE
PALANCAS DEL FRENO DE MANO Y DE AJUSTE DEL CONCAVO
MANOVERSPAKAR FOR SLAGSKO OCH HANDBROMS

KEY	PART NO.	PART NAME	QTY	SERIAL NO.	975	975HY/4	REMARKS
30	14M7152	NUT	1		X	X	M10
31	Z24492	YOKE	1		X	X	10 X 40 MM
32	Z24487	PIN	1		X	X	
33	Z29941	SHAFT	1		X	X	
34	19M7288	CAP SCREW	1		X	X	M8 X 30
35	19M7167	CAP SCREW	1		X	X	M10 X 25
36	AZ18547	BRACKET	1		X	X	
37	12M7013	LOCK WASHER	AR		X	X	10 MM
38	14M7140	NUT	AR		X	X	M10

(A) HAND BRAKE
FREIN A MAIN
HANDBREMSE
FRENO A MANO
FRENO DE MANO
HANDBROMS

(B) CONCAVE
CONTRE-BATTEUR
DRESCHKORB
CONTROBATTITORE
CONCAVO
SLAGSKO

COPYRIGHT©1994 - 2008 DEERE & COMPANY Moline, Illinois All rights reserved

(4A21) CONCAVE EXTENSION
RALLONGE DE CONTRE-BATTEUR
DRESCHKORBVERLAENGERUNG
PROLUNGA CONTROBATTITORE
EXTENSION DEL CONCAVO
SLAGSKOFORLANGNING

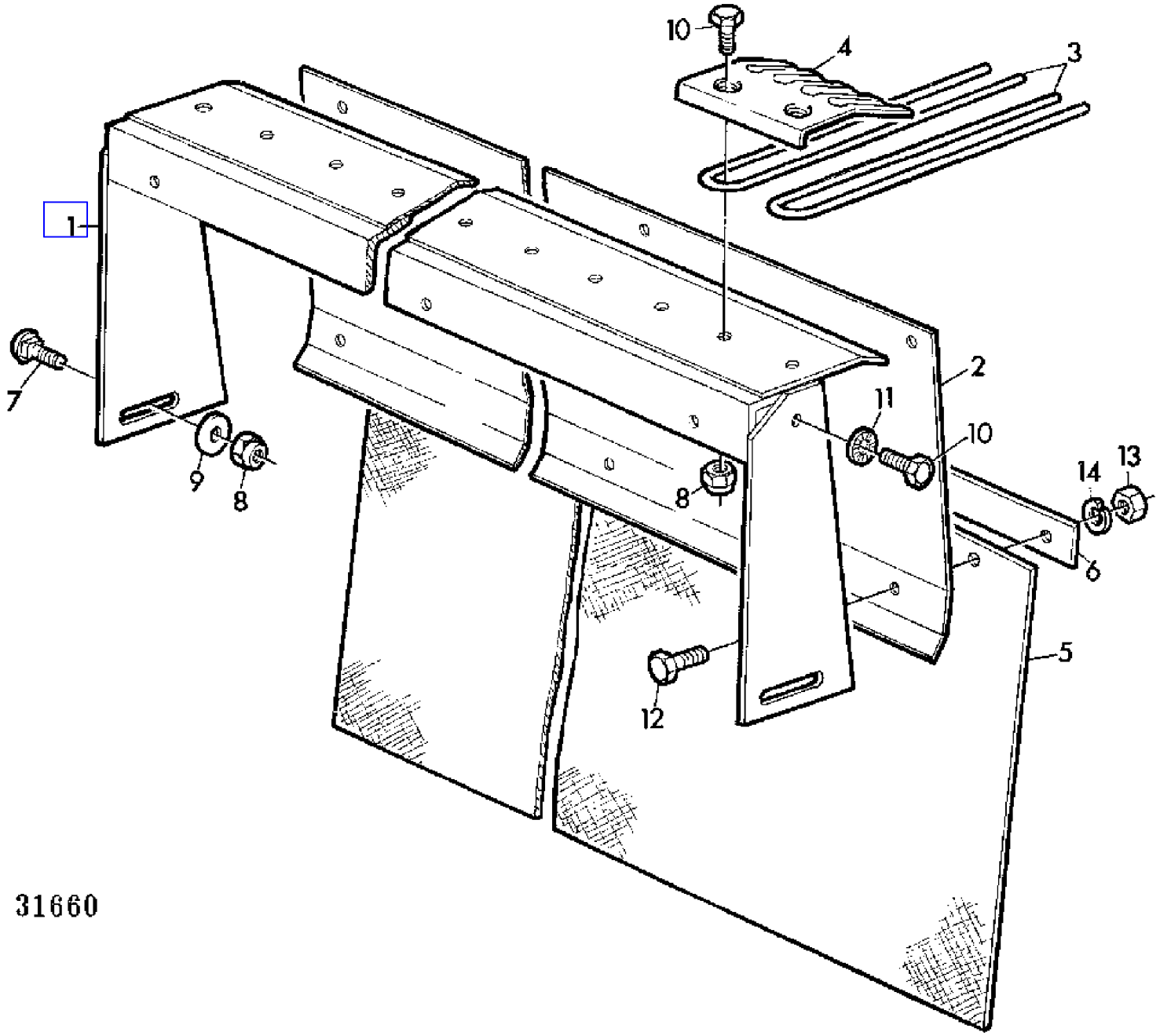

COPYRIGHT©1994 - 2008 DEERE & COMPANY Moline, Illinois All rights reserved

(4A21) CONCAVE EXTENSION
RALLONGE DE CONTRE-BATTEUR
DRESCHKORBVERLAENGERUNG
PROLUNGA CONTROBATTITORE
EXTENSION DEL CONCAVO
SLAGSKOFORLANGNING

KEY	PART NO.	PART NAME	QTY	SERIAL NO.	975	975HY/4	REMARKS
1	AZ22754	HOLDER	1	- 010731	X		
2	Z33845	SHEET	1	- 010731	X		
3	Z31009	TINE	20	- 010731	X		
4	Z29341	RETAINER	10	- 010731	X		
5	Z35498	LIMIT CURTAIN	1	- 010731	X		(SUB FOR Z30190)
6	Z22768	STRIPPER	1	- 010731	X		
7	03M7093	BOLT	AR	- 010731	X		M8 X 25
8	14M7166	LOCK NUT	AR	- 010731	X		M8
9	24M7024	WASHER	AR	- 010731	X		9,5 MM
10	19M7139	CAP SCREW	AR	- 010731	X		M8 X 20
11	12M7072	LOCK WASHER	AR	- 010731	X		8 MM
12	19M7375	CAP SCREW	AR	- 010731	X		M6 X 18
13	14M7027	NUT	AR	- 010731	X		M6
14	12M7012	LOCK WASHER	AR	- 010731	X		6 MM

COPYRIGHT©1994 - 2008 DEERE & COMPANY Moline, Illinois All rights reserved

(3D07) CONDENSOR-AIR CONDITIONED CAB
CONDENSEUR-CABINE CLIMATISEE
KONDENSATOR-KABINE MIT KLIMAANLAGE
CONDENSATORE-CABINA CONDIZIONATA
CONDENSADOR-CABINA CON AIRE ACONDICIONADO
KONDENSOR-HYTT MED LUFTKONDITIONERING

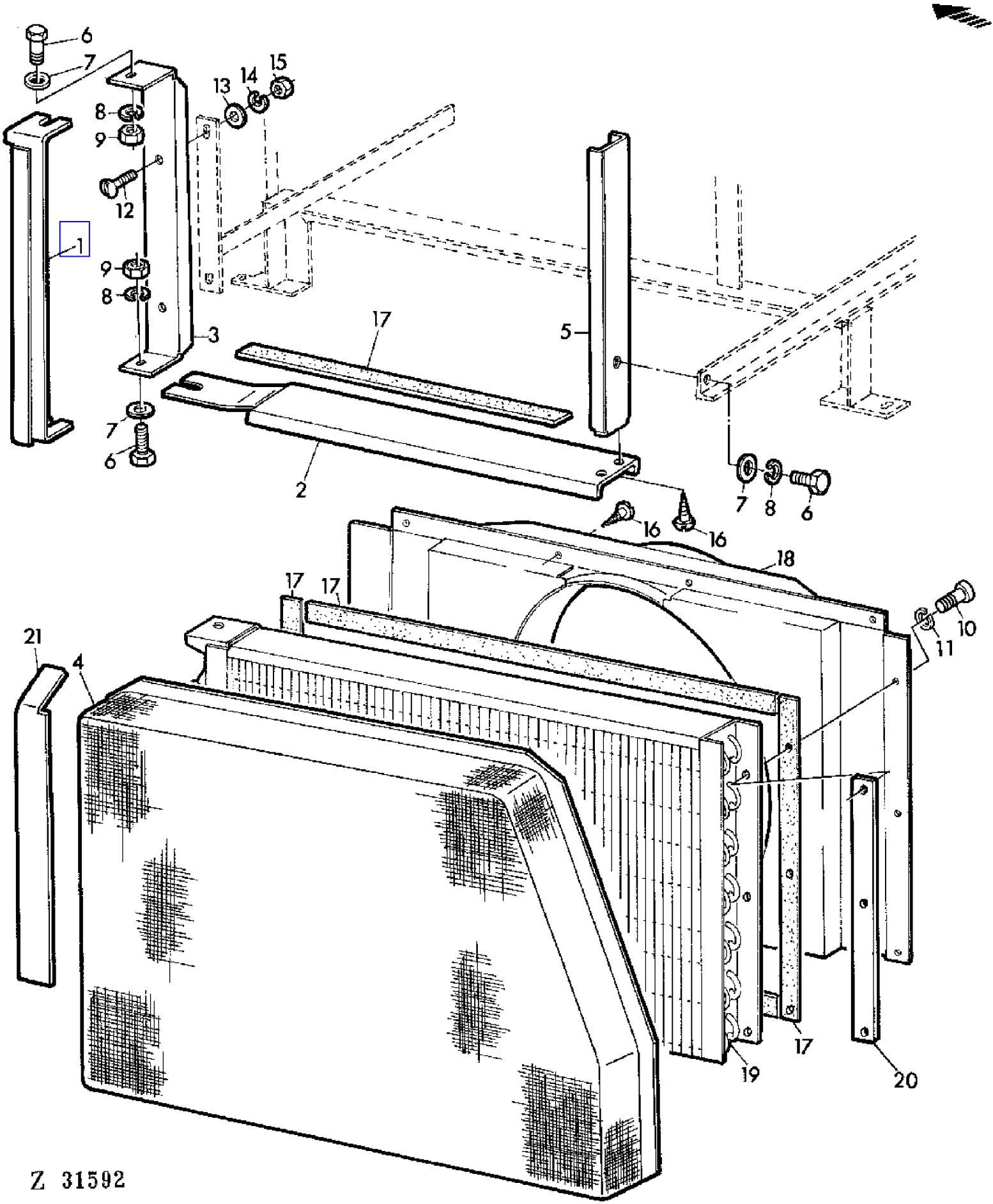

COPYRIGHT©1994 - 2008 DEERE & COMPANY Moline, Illinois All rights reserved

(3D07) CONDENSOR-AIR CONDITIONED CAB
CONDENSEUR-CABINE CLIMATISEE
KONDENSATOR-KABINE MIT KLIMAANLAGE
CONDENSATORE-CABINA CONDIZIONATA
CONDENSADOR-CABINA CON AIRE ACONDICIONADO
KONDENSOR-HYTT MED LUFTKONDITIONERING

KEY	PART NO.	PART NAME	QTY	SERIAL NO.	975	975HY/4	REMARKS
1	CA23761	SUPPORT	1		X	X	
2	DA23762	HOLDER	1		X	X	
3	CA20523	HOLDER	1		X	X	
4	DA23753	SCREEN	1		X	X	
5	DA21220	HOLDER	1		X	X	
6	19M7162	CAP SCREW	AR		X	X	M8 X 16
7	24M7036	WASHER	AR		X	X	9 MM
8	12H303	LOCK WASHER	3		X	X	5/16"
9	14M7029	NUT	AR		X	X	M8
10	21M7085	SCREW	3		X	X	M6 X 20
11	12M7012	LOCK WASHER	AR		X	X	6 MM
12	21M7031	SCREW	AR		X	X	M6 X 15
13	24M7088	WASHER	AR		X	X	6,6 MM
14	12H302	LOCK WASHER	2		X	X	1/4"
15	14M7027	NUT	AR		X	X	M6
16	37M6835	SCREW	AR		X	X	M5,5 X 13
17	CA20531	WEATHERSTRIP	AR		X	X	
18	DA23682	SHROUD	1		X	X	
19	AH87966	VAPOR CONDENSER	1		X	X	
20	CA22533	STRAP	1		X	X	
21	CA23765	LATCH	1		X	X	

COPYRIGHT©1994 - 2008 DEERE & COMPANY Moline, Illinois All rights reserved

(3A25) CONTROL LEVER HOUSING
CAPOTAGE DES LEVIERS DE COMMANDE
SCHALTKASTEN
CARTER DELLE LEVE DI COMANDO
CAJA DE MANDOS
MANOVERSPAKSHUS

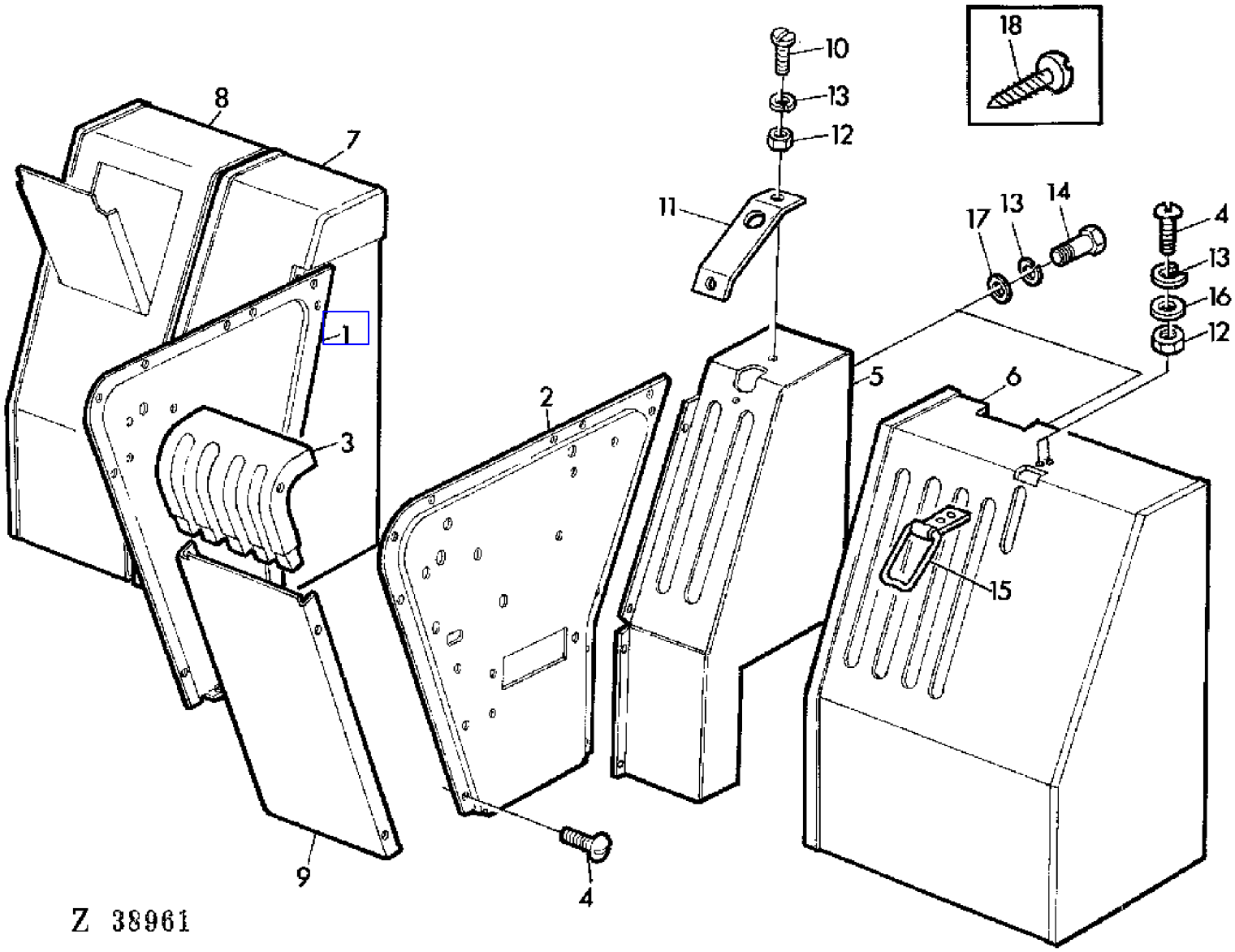

COPYRIGHT©1994 - 2008 DEERE & COMPANY Moline, Illinois All rights reserved

(3A25) CONTROL LEVER HOUSING
CAPOTAGE DES LEVIERS DE COMMANDE
SCHALTKASTEN
CARTER DELLE LEVE DI COMANDO
CAJA DE MANDOS
MANOVERSPAKSHUS

KEY	PART NO.	PART NAME	QTY	SERIAL NO.	975	975HY/4	REMARKS
1	AZ22675	SHEET	1		X	X	
2	AZ22676	SHEET	1		X		
	AZ28522	SHEET	1			X	
3	Z33674	SHIELD	1		X	X	
4	21M7087	SCREW	AR		X	X	M6 X 12
5	AZ28192	CONSOLE	1		X	X	
6	AZ22672	HOUSING	1		X	X	
	AZ25464	HOUSING	1		X	X	(A)
7	AZ22859	GUARD	1		X	X	
8	AZ22860	SHIELD	1		X	X	
9	Z33684	SHEET	1		X	X	
10	21M7031	SCREW	1		X	X	M6 X 15
11	Z29933	GUIDE	1		X	X	AR
12	14M7027	NUT	AR		X	X	M6
13	12M7012	LOCK WASHER	AR		X	X	6 MM
14	19M6614	CAP SCREW	AR		X	X	M6 X 12
15	AZ27907	DETENT	1		X	X	AR
16	Z26250	WASHER	2		X	X	
17	24M7088	WASHER	AR		X	X	6,6 MM
18	37M7029	SCREW	2		X	X	5,5 X 13 MM

(A) FOR HYDROSTATIC REEL DRIVE ONLY
UNIQUEMENT POUR ENTRAINEMENT HYDROSTATIQUE DU RABATTEUR
NUR FUER HYDROSTATISCHEN HASPELANTRIEB
SOLO PER COMANDO IDROSTATICO DELL'ASPO
TAN SOLO PARA LA TRANSMISION HIDROSTATICA DEL MOLINETE
ENDAST FOR HYDROSTATISK HASPELDRIVNING

COPYRIGHT©1994 - 2008 DEERE & COMPANY Moline, Illinois All rights reserved

(4G09) CONTROL LINKAGE
MECANISME DE COMMANDE
EIN- UND ABSCHALTUNG
MECCANISMO DI COMANDO
VARILLAJE DE MANDO
KOPPLINGSMEKANISM

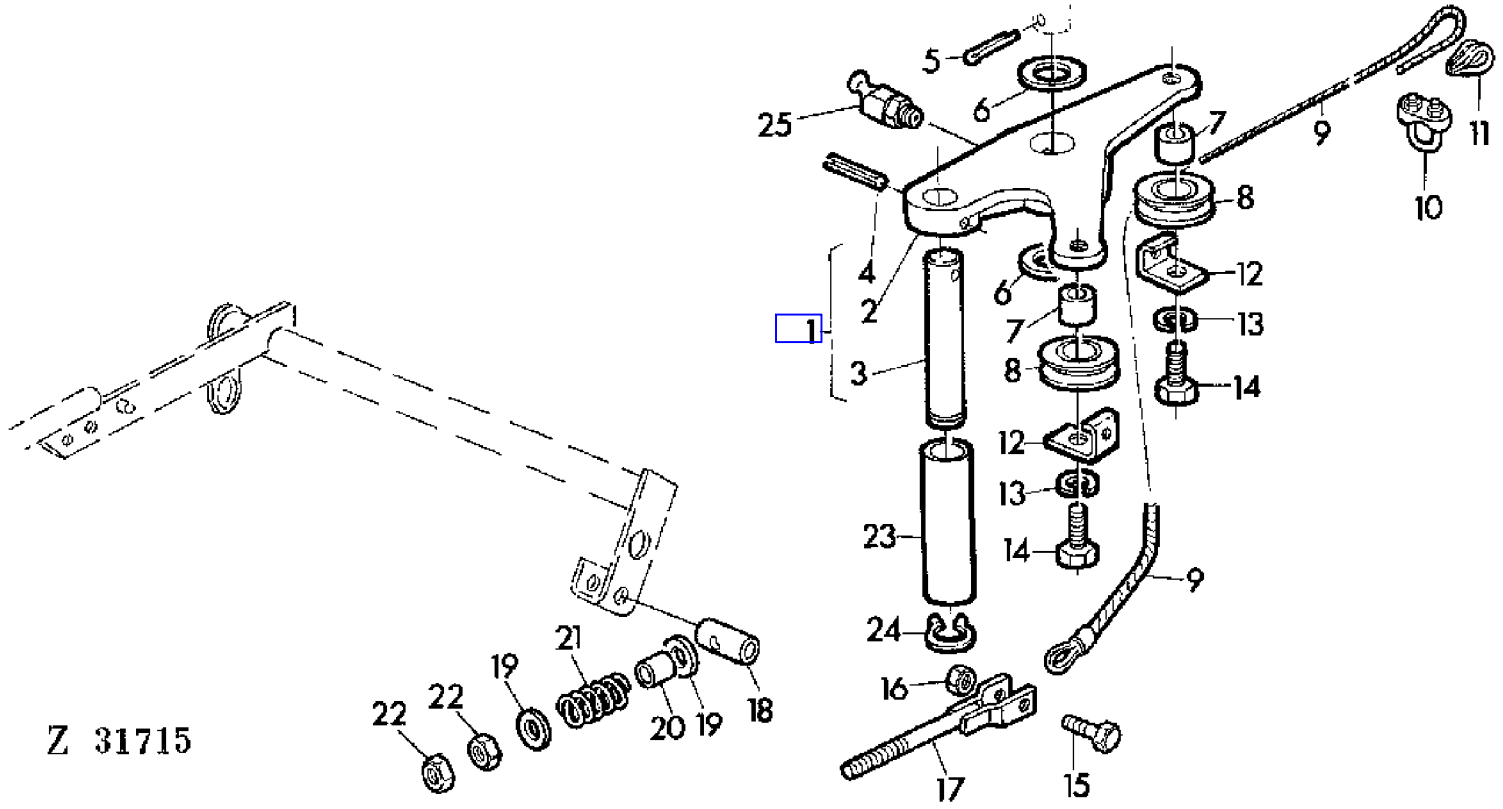

COPYRIGHT©1994 - 2008 DEERE & COMPANY Moline, Illinois All rights reserved

(4G09) CONTROL LINKAGE
MECANISME DE COMMANDE
EIN- UND ABSCHALTUNG
MECCANISMO DI COMANDO
VARILLAJE DE MANDO
KOPPLINGSMEKANISM

KEY	PART NO.	PART NAME	QTY	SERIAL NO.	975	975HY/4	REMARKS
1	AZ22561	LEVER	1		X	X	ASSY, INCL KEYS 2,3,4
2	Z10897	LEVER	1		X	X	
3	Z33388	PIN	1		X	X	
4	34M7046	SPRING PIN	1		X	X	
5	11M7037	COTTER PIN	AR		X	X	6,3 X 40 MM
6	24M7137	WASHER	AR		X	X	25 MM
7	Z34438	SPACER	2		X	X	(SUB FOR Z33403)
8	Z32900	ROLLER	2		X	X	
9	AZ23796	CABLE	1		X	X	INCL KEYS 10,11
10	AZ14374	CLAMP	2		X	X	
11	Z32297	THIMBLE	2		X	X	
12	Z33391	ANGLE	2		X	X	
13	12M7013	LOCK WASHER	AR		X	X	10 MM
14	19M7168	CAP SCREW	2		X	X	M10 X 30
15	19M7077	CAP SCREW	1		X	X	M6 X 20
16	14M7165	LOCK NUT	AR		X	X	M6
17	AZ22504	YOKE	1		X	X	(SUB Z40936, Z47561, Z47562)
18	Z33397	PIN	1		X	X	
19	24M7179	WASHER	AR		X	X	8,4 MM
20	Z33410	SPACER	1		X	X	(SUB Z40936, Z47561, Z47562)
21	294SEL	SPRING	1		X	X	(SUB Z40936, Z47561, Z47562)
22	14M7166	LOCK NUT	AR		X	X	M8
23	Z33390	SPACER	1		X	X	
24	40M1826	SNAP RING	1		X	X	22 X 1,2 MM
25	58M7007	LUBRICATION FITTING	1		X	X	

COPYRIGHT©1994 - 2008 DEERE & COMPANY Moline, Illinois All rights reserved

(3E02) CONTROL UNIT-AIR CONDITIONING SYSTEM
UNITE DE COMMANDE-CLIMATISATION
STEUERUNGSEINHEIT-KLIMAANLAGE
CENTRO DI COMANDO,IMPIANTO DI ARIA CONDIZIONATA
CENTRO DE MANDO,SISTEMA DE ACONDICIONAMIENTO DE AIRE
KONTROLLADA FOR LUFTKONDITIONERING

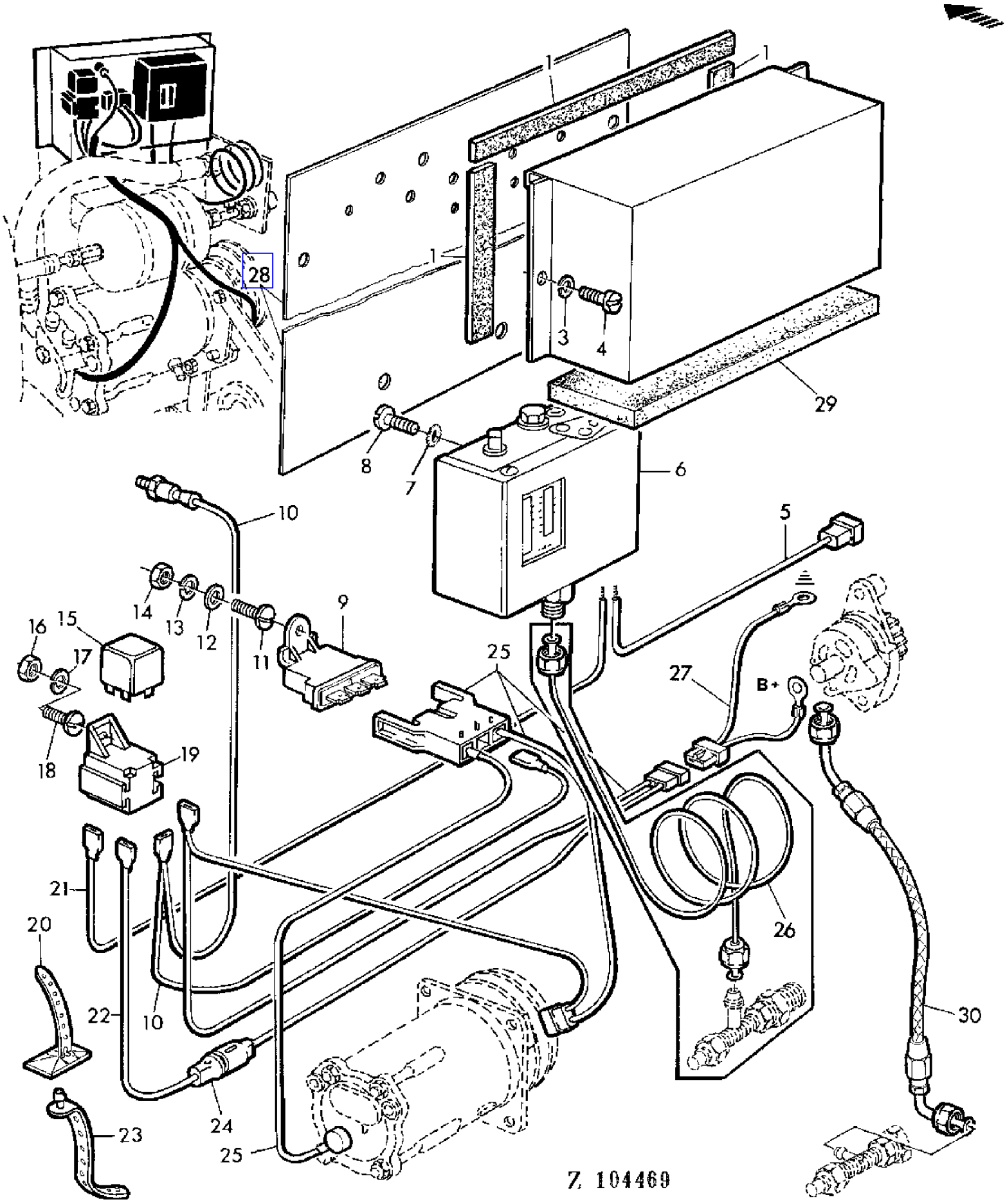

COPYRIGHT©1994 - 2008 DEERE & COMPANY Moline, Illinois All rights reserved

(3E02) CONTROL UNIT-AIR CONDITIONING SYSTEM
UNITE DE COMMANDE-CLIMATISATION
STEUERUNGSEINHEIT-KLIMAANLAGE
CENTRO DI COMANDO,IMPIANTO DI ARIA CONDIZIONATA
CENTRO DE MANDO,SISTEMA DE ACONDICIONAMIENTO DE AIRE
KONTROLLADA FOR LUFTKONDITIONERING

KEY	PART NO.	PART NAME	QTY	SERIAL NO.	975	975HY/4	REMARKS
1	CA20531	WEATHERSTRIP	1		X	X	LGTH = 3300 MM (20 X 4 MM)
2	AZ31712	SHIELD	1		X	X	
3	12M7012	LOCK WASHER	2		X	X	6 MM
4	21M7088	SCREW	2		X	X	M6 X 12
5	AZ31716	POWER CORD	1		X	X	
6	AZ31713	ACCUMULATOR	1		X	X	
7	12M7045	LOCK WASHER	2		X	X	4 MM
8	21M7137	SCREW	2		X	X	M4 X 10
9	AR77344	FUSE	1		X	X	
10	AZ29061	WIRING HARNESS	1		X	X	
11	21M7033	SCREW	1		X	X	M4 X 16
12	24M7117	WASHER	1		X	X	4,3 MM
13	12M7031	LOCK WASHER	1		X	X	4 MM
14	14M7139	NUT	1		X	X	M4
15	AZ26996	RELAY	1		X	X	
16	14M7028	NUT	1		X	X	M5
17	12M7011	LOCK WASHER	1		X	X	5 MM
18	21M7158	SCREW	1		X	X	M5 X 12
19	AZ26995	RECEPTACLE CONNECTOR BODY	1		X	X	
20	Z36647	CLAMP	AR		X	X	
21	AZ31717	POWER CORD	1		X	X	
22	AZ29063	POWER CORD	1		X	X	
23	Z31020	CLAMP	1		X	X	
24	AZ29064	FUSE HOLDER	1		X	X	
25	AZ29206	WIRING HARNESS	1		X	X	
26	AZ31715	TUBE	1		X	X	(ORD AZ33951)
27	AZ29059	WIRING HARNESS	1		X	X	
28	AZ31876	SHEET	1		X	X	
29	Z42894	BARRIER	1		X	X	
30	AZ33951	HYDRAULIC HOSE	1		X	X	(SUB FOR AZ31715)

COPYRIGHT©1994 - 2008 DEERE & COMPANY Moline, Illinois All rights reserved

(1B11) COOLANT MANIFOLD/THERMOSTAT
COLLECTEUR D'EAU/THERMOSTAT
KUEHLWASSERKRUEMMER/THERMOSTAT
COLLETTORE D'ACQUA/TERMOSTATO
COLECTOR DEL AGUA DE REFRIGERACION/TERMOSTATO
VATTENMANTEL/TERMOSTAT

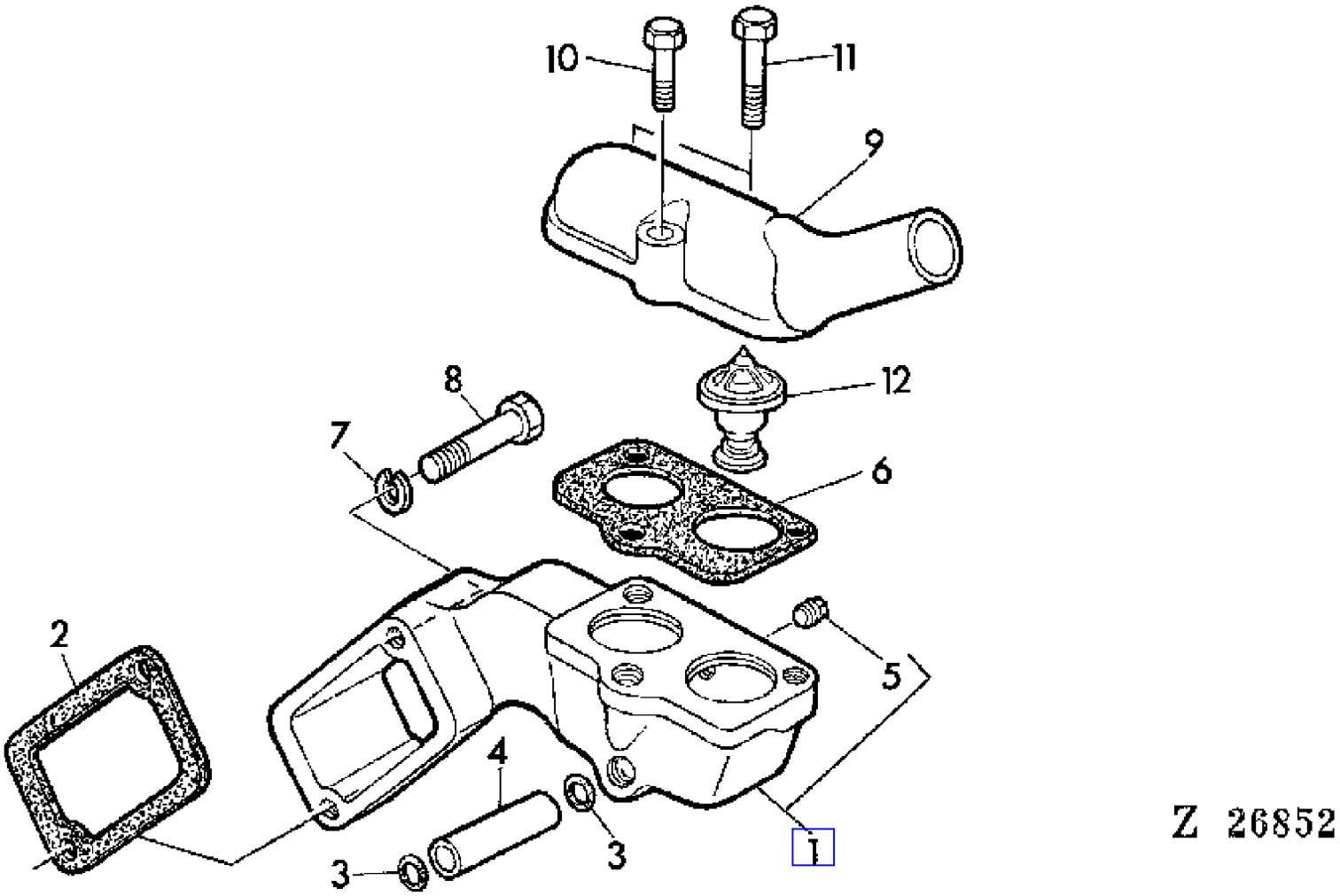

COPYRIGHT©1994 - 2008 DEERE & COMPANY Moline, Illinois All rights reserved

(1B11) COOLANT MANIFOLD/THERMOSTAT
COLLECTEUR D'EAU/THERMOSTAT
KUEHLWASSERKRUEMMER/THERMOSTAT
COLLETTORE D'ACQUA/TERMOSTATO
COLECTOR DEL AGUA DE REFRIGERACION/TERMOSTATO
VATTENMANTEL/TERMOSTAT

KEY	PART NO.	PART NAME	QTY	SERIAL NO.	975	975HY/4	REMARKS
1	R54637	HOUSING	1		X	X	ASSY, INCL KEY 5
2	R54641	GASKET	1		X	X	
3	R56461	O-RING	2		X	X	(SUB FOR R47144)
4	R61355	TUBE	1		X	X	
5	15H584	PIPE PLUG	1		X	X	1/2"
6	R54638	GASKET	1		X	X	
7	12H304	LOCK WASHER	2		X	X	3/8"
8	19H1912	CAP SCREW	2		X	X	3/8" X 3-1/2"
9	R55968	CASE	1		X	X	
10	19H1801	CAP SCREW	1		X	X	3/8" X 2"
11	19H988	CAP SCREW	2		X	X	3/8" X 1-1/4"
12	AR48675	THERMOSTAT	2		X	X	82C (180F)

COPYRIGHT©1994 - 2008 DEERE & COMPANY Moline, Illinois All rights reserved

(1C03) COUNTERSHAFT FOR ROTARY RADIATOR SCREEN
ARBRE DE RENVOI DU TAMIS ROTATIF
VORGELEGE FUER ROTIERENDES KUEHLERSIEB
CONTRALBERO DEL SCHERMO ROTANTE DEL RADIATORE
EJE INTERMEDIO PARA LA PERSIANA ROTATIVA DE RADIATOR
MELLANAXEL FOR ROTERANDE KYLARSKYDD

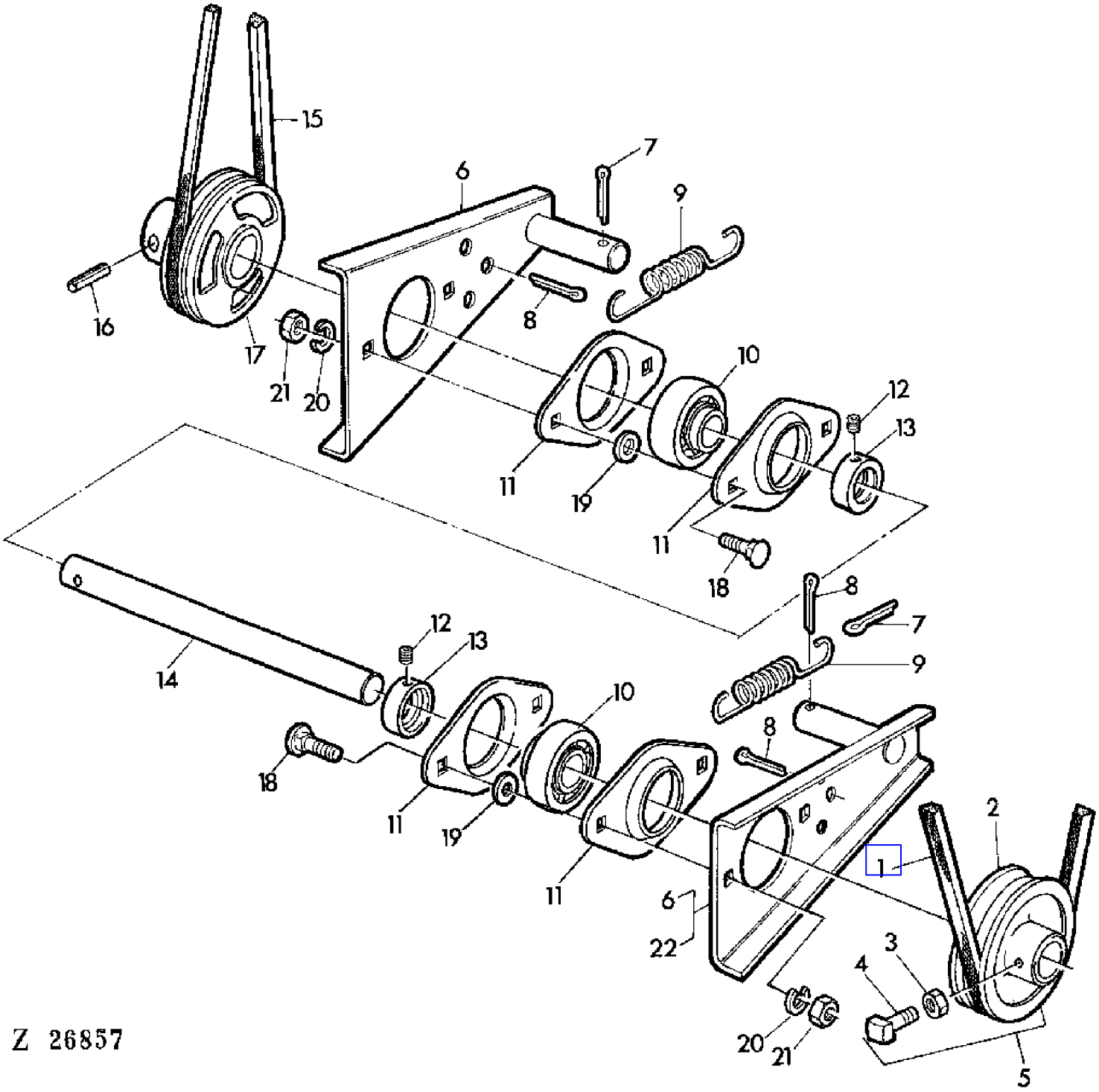

COPYRIGHT©1994 - 2008 DEERE & COMPANY Moline, Illinois All rights reserved

(1C03) COUNTERSHAFT FOR ROTARY RADIATOR SCREEN
ARBRE DE RENVOI DU TAMIS ROTATIF
VORGELEGE FUER ROTIERENDES KUEHLERSIEB
CONTRALBERO DEL SCHERMO ROTANTE DEL RADIATORE
EJE INTERMEDIO PARA LA PERSIANA ROTATIVA DE RADIATOR
MELLANAXEL FOR ROTERANDE KYLARSKYDD

KEY	PART NO.	PART NAME	QTY	SERIAL NO.	975	975HY/4	REMARKS
1	Z34786	BELT	1		X		
	Z37192	BELT	1			X	
2	Z10864	PULLEY	1		X	X	
3	14M7029	NUT	AR		X	X	M8
4	Z32432	SET SCREW	1		X	X	M8 X 20
5	AZ21905	PULLEY	1		X	X	ASSY, INCL KEYS 2,3,4
6	AZ23070	SUPPORT	2		X		
	AZ23070	SUPPORT	1			X	
7	11M7013	COTTER PIN	2		X	X	3,2 X 20 MM
8	11M7035	COTTER PIN	2		X	X	6,3 X 25 MM
9	Z21232	EXTENSION SPRING	2		X	X	
10	AZ19970	BALL BEARING	2		X	X	
11	Z31372	PRESSED FLANGED HOUSING	4		X	X	
12	22M7079	SET SCREW	2		X	X	M6 X 6
13	AZ20030	ECCENTRIC LOCKING COLLAR	2		X	X	INCL KEY 12
14	Z34685	SHAFT	1		X		
	Z38144	SHAFT	1			X	
15	Z32190	BELT	1		X		
	Z37191	BELT	1			X	
16	34M7033	SPRING PIN	1		X	X	5 X 30 MM
17	Z10818	PULLEY	1		X	X	
18	03M7092	BOLT	4		X	X	M6 X 16
19	24M7054	WASHER	4		X	X	6,4 MM
20	12M7012	LOCK WASHER	AR		X	X	6 MM
21	14M7027	NUT	AR		X	X	M6
22	AZ26438	SUPPORT	1			X	

COPYRIGHT©1994 - 2008 DEERE & COMPANY Moline, Illinois All rights reserved

(2F21) COVER LEFT-HAND
HABILLAGE GAUCHE
VERKLEIDUNG LINKS
RIVESTIMENTO SINISTRO
PANEL DE RECUBRIMIENTO IZQUIERDO
VANSTER BEKLADNAD

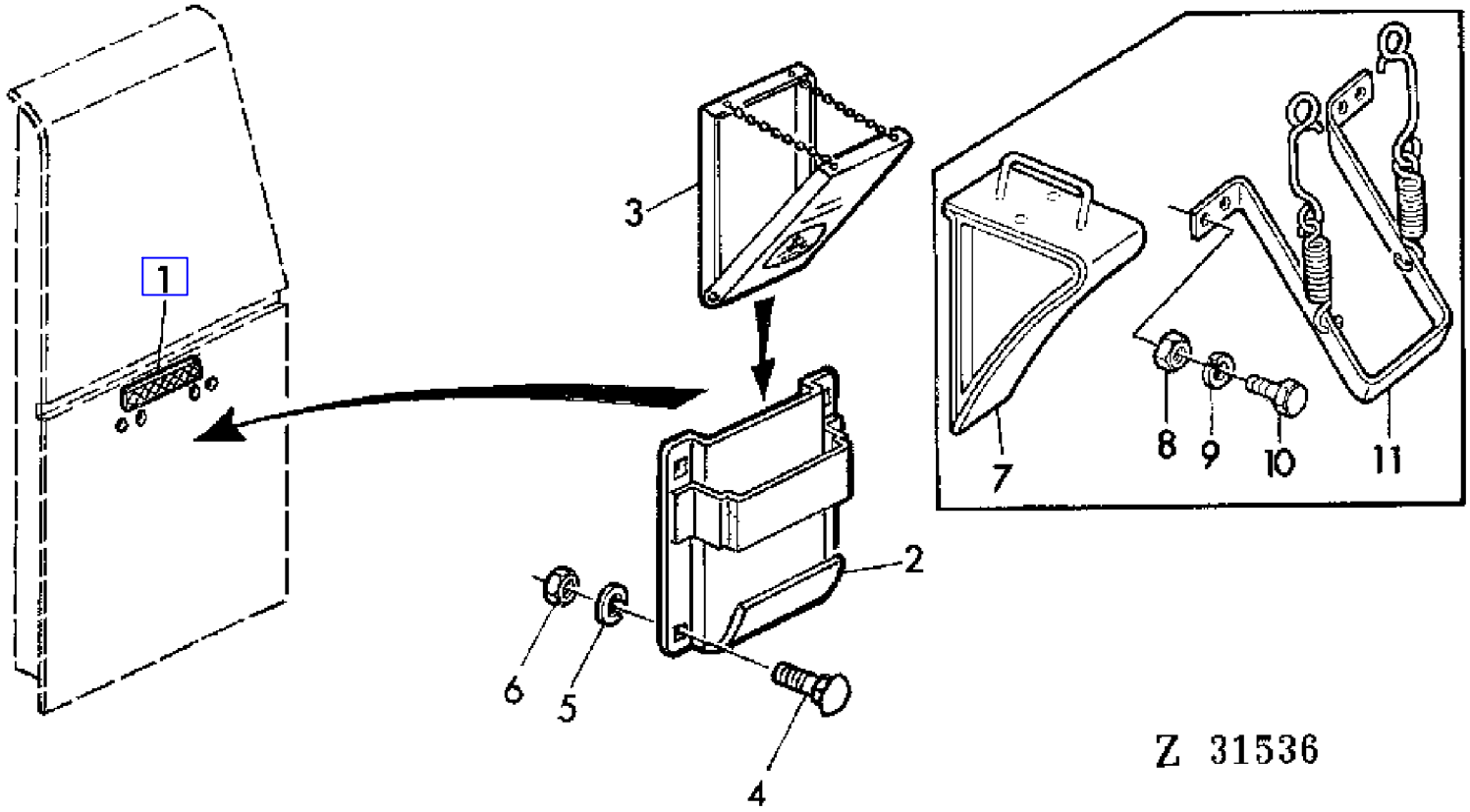

COPYRIGHT©1994 - 2008 DEERE & COMPANY Moline, Illinois All rights reserved

(2F21) COVER LEFT-HAND
HABILLAGE GAUCHE
VERKLEIDUNG LINKS
RIVESTIMENTO SINISTRO
PANEL DE RECUBRIMIENTO IZQUIERDO
VANSTER BEKLADNAD

KEY	PART NO.	PART NAME	QTY	SERIAL NO.		975	975HY	REMARKS
1	Z35508	STRAP	1		- 013377	X		
2	AL26778	SUPPORT	1	013378	-	X	X	
3	AL26777	CHOCK BLOCK	1	013378	-	X	X	
4	21M7081	SCREW	4			X	X	M8 X 15
5	12M7008	LOCK WASHER	AR			X	X	8 MM
6	14M7029	NUT	AR			X	X	M8
7	AZ21943	CHOCK BLOCK	1		- 013377	X		
8	14M7027	NUT	AR			X	X	M6
9	12M7012	LOCK WASHER	AR			X	X	6 MM
10	19M7159	CAP SCREW	AR			X	X	M6 X 16
11	AZ24379	HOLDER	1		- 013377	X		

COPYRIGHT©1994 - 2008 DEERE & COMPANY Moline, Illinois All rights reserved

(2F24) COVERS,LEFT HAND
HABILLAGE GAUCHE
VERKLEIDUNG LINKS
PANNELLI,LATO SINISTRO
REVESTIMIENTOS,LADO IZQUIERDO
BEKLADNAD,VANSTER

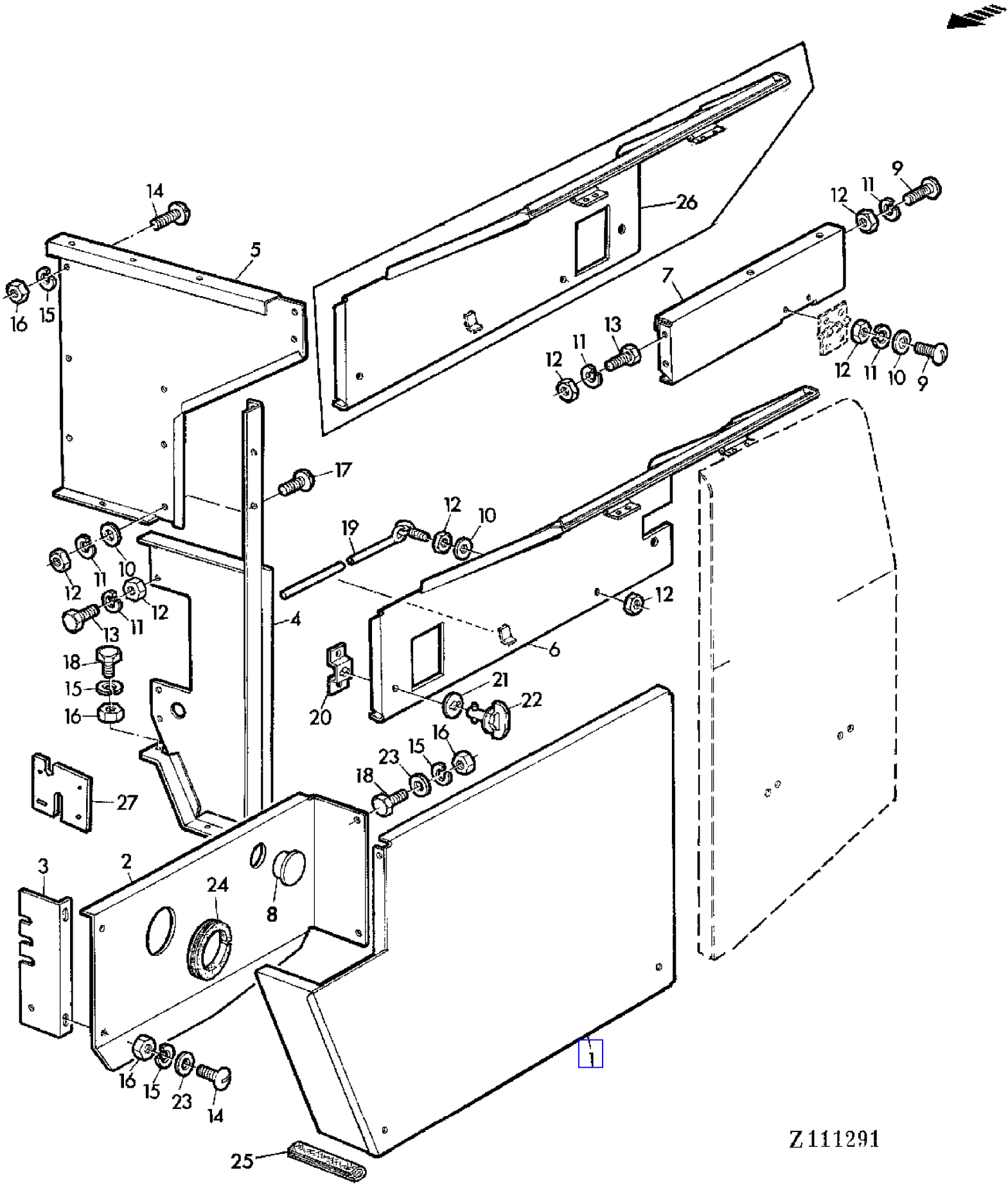

COPYRIGHT©1994 - 2008 DEERE & COMPANY Moline, Illinois All rights reserved

(2F24) COVERS,LEFT HAND
HABILLAGE GAUCHE
VERKLEIDUNG LINKS
PANNELLI,LATO SINISTRO
REVESTIMIENTOS,LADO IZQUIERDO
BEKLADNAD,VANSTER

KEY	PART NO.	PART NAME	QTY	SERIAL NO.		975	975HY/4	REMARKS
1	AZ23978	GUARD	1			X	X	
2	AZ24896	GUARD	1			X	X	
3	Z34976	SHEET	1			X	X	
4	AZ22574	GUARD	1			X	X	
5	Z33241	SIDE WALL	1			X	X	(SUB FOR AZ22450)
6	AZ29402	SHIELD	1			X	X	(A)
7	Z33239	SIDE WALL	1			X	X	(SUB FOR AZ22448)
8	Z30234	PLUG	1	006196	-	X	X	
9	21M7031	SCREW	AR			X	X	M6 X 15
10	Z26250	WASHER	AR			X	X	6,5 MM
11	12M7012	LOCK WASHER	AR			X	X	6 MM
12	14M7027	NUT	AR			X	X	M6
13	19M7159	CAP SCREW	AR			X	X	M6 X 16
14	21M7081	SCREW	AR			X	X	M8 X 15
15	12M7008	LOCK WASHER	AR			X	X	8 MM
16	14M7029	NUT	AR			X	X	M8
17	21M7087	SCREW	AR			X	X	M6 X 12
18	19M7162	CAP SCREW	AR			X	X	M8 X 16
19	AZ12148	ROD	1			X	X	
20	AZ23934	RETAINER	1			X	X	
21	Z34136	WASHER	2			X	X	
22	AZ23253	LATCH	2			X	X	
23	24M7036	WASHER	AR			X	X	9 MM
24	Z35898	GUARD	1	006196	-	X	X	LGTH = 495 MM
25	Z35897	GUARD	1			X	X	
26	AZ22575	GUARD	1			X	X	
27	Z45094	SHEET	1			X	X	

(A) LONG UNLOADING AUGER PIPE
GOULOTTE DE VIDANGE LONGUE
LANGES ENTLEERROHR
TUBO DI SVUOTAMENTO LUNGO
MANGA DE DESCARGA LARGA
LANG TOMNINGSSKRUV FOR SPANNMALSTANK

COPYRIGHT©1994 - 2008 DEERE & COMPANY Moline, Illinois All rights reserved

(2G02) COVERS,LEFT HAND
HABILLAGE GAUCHE
VERKLEIDUNG LINKS
PANNELLI,LATO SINISTRO
REVESTIMIENTOS,LADO IZQUIERDO
BEKLADNAD,VANSTER

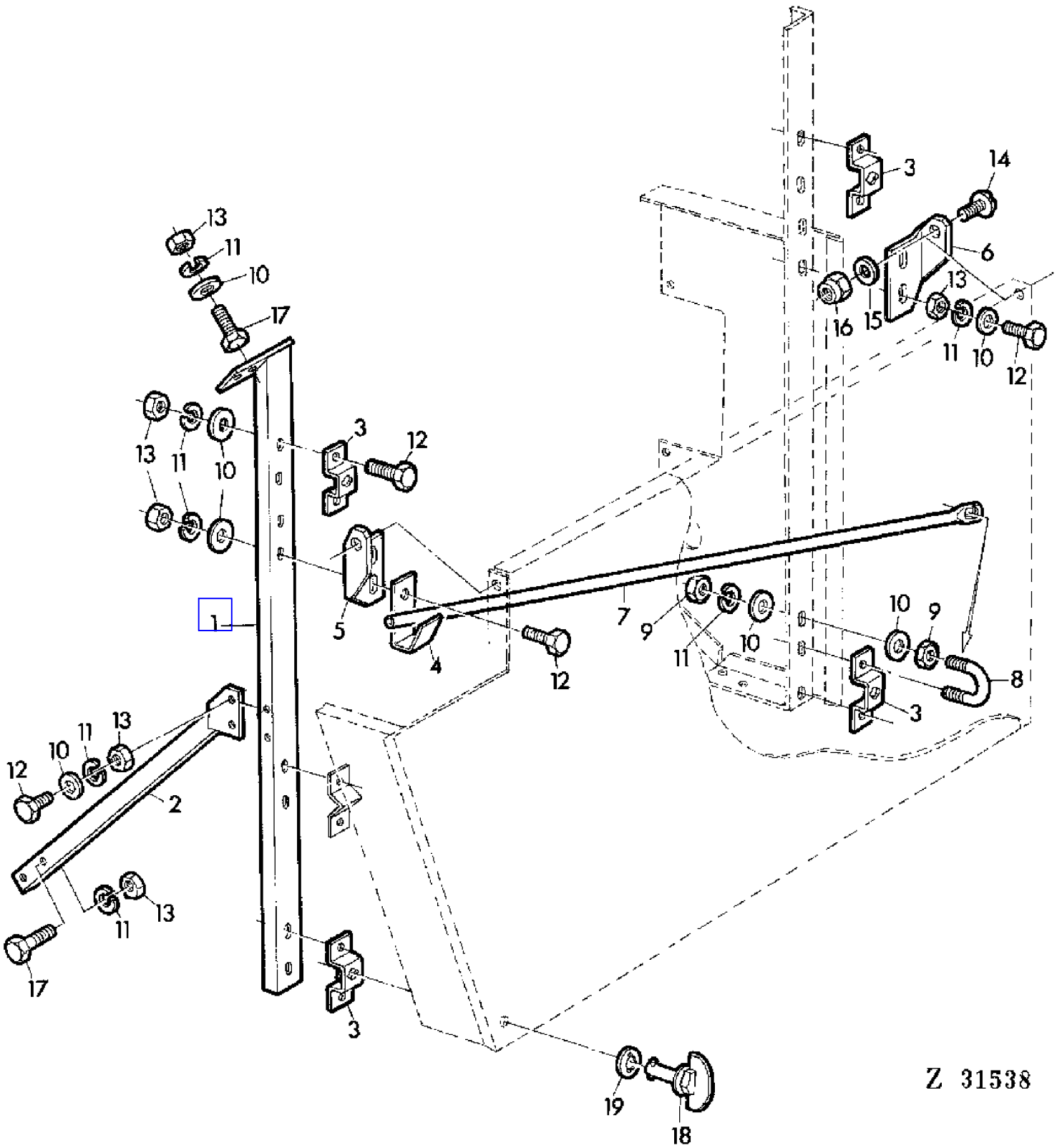

COPYRIGHT©1994 - 2008 DEERE & COMPANY Moline, Illinois All rights reserved

(2G02) COVERS,LEFT HAND
HABILLAGE GAUCHE
VERKLEIDUNG LINKS
PANNELLI,LATO SINISTRO
REVESTIMIENTOS,LADO IZQUIERDO
BEKLADNAD,VANSTER

KEY	PART NO.	PART NAME	QTY	SERIAL NO.	975	975HY/4	REMARKS
1	AZ23977	BRACE	1		X	X	
2	AZ25688	BRACE	1		X	X	
3	AZ23934	RETAINER	4		X	X	
4	Z34962	RETAINER	1		X	X	
5	Z34965	HOLDER	1		X	X	
6	Z34966	HOLDER	1		X	X	
7	Z35130	ROD	1		X	X	
8	Z23660	U-BOLT	1		X	X	
9	14M7151	NUT	AR		X	X	M8
10	24M7036	WASHER	AR		X	X	9 MM
11	12M7008	LOCK WASHER	AR		X	X	8 MM
12	19M7162	CAP SCREW	AR		X	X	M8 X 16
13	14M7029	NUT	AR		X	X	M8
14	21M7190	SCREW	AR		X	X	M10 X 25
15	24M7096	WASHER	AR		X	X	10,5 MM
16	14M7167	LOCK NUT	AR		X	X	M10
17	19M7139	CAP SCREW	AR		X	X	M8 X 20
18	AZ23253	LATCH	2		X	X	
19	Z34136	WASHER	2		X	X	

COPYRIGHT©1994 - 2008 DEERE & COMPANY Moline, Illinois All rights reserved

(2G08) COVERS,RIGHT-HAND
HABILLAGE DROIT
VERKLEIDUNG RECHTS
PANNELLI,LATO DESTRO
REVESTIMIENTOS, LADO DERECHO
BEKLADNAD,HOGER

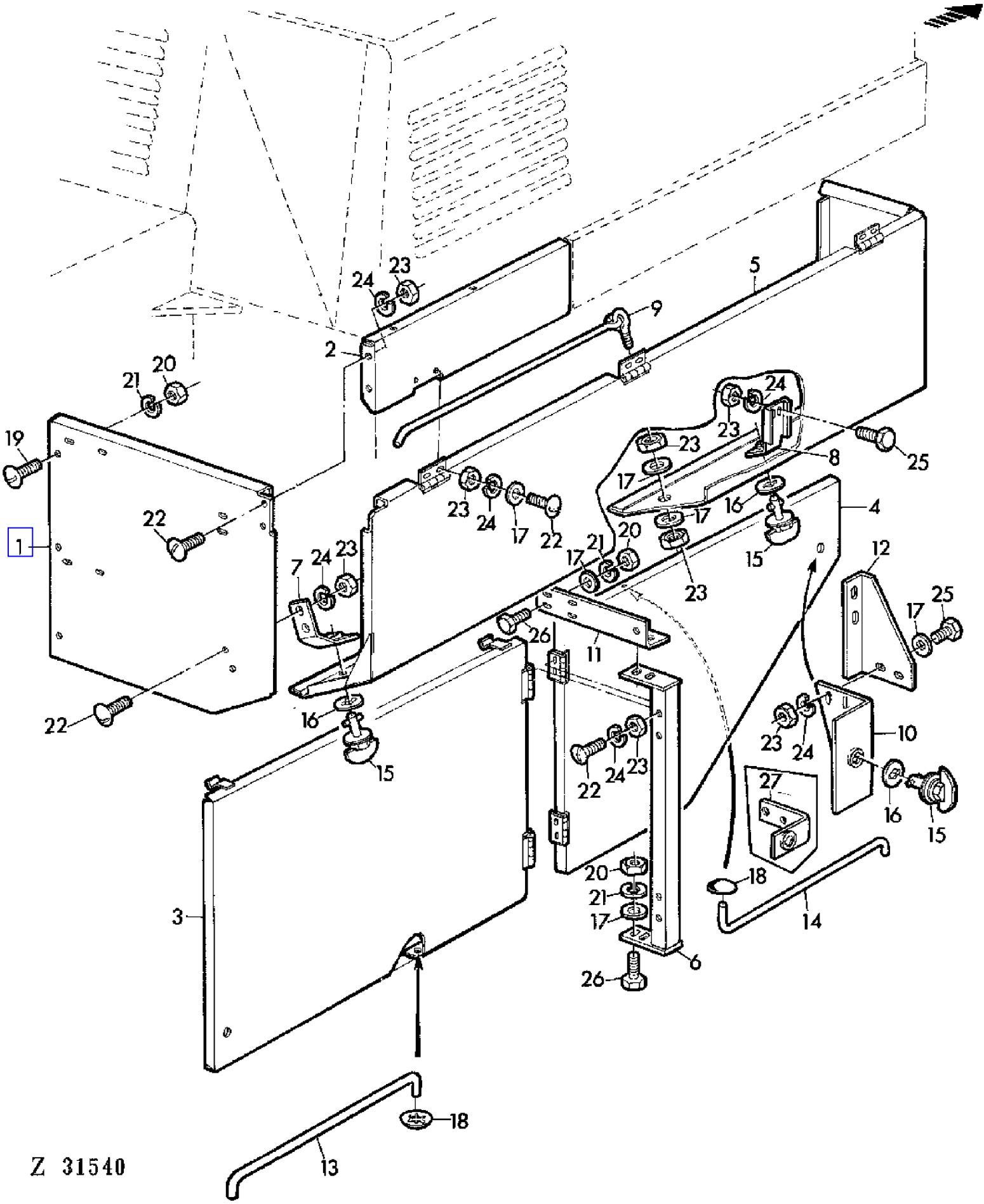

COPYRIGHT©1994 - 2008 DEERE & COMPANY Moline, Illinois All rights reserved

(2G08) COVERS,RIGHT-HAND
HABILLAGE DROIT
VERKLEIDUNG RECHTS
PANNELLI,LATO DESTRO
REVESTIMIENTOS, LADO DERECHO
BEKLADNAD,HOGER

KEY	PART NO.	PART NAME	QTY	SERIAL NO.	975	975HY/4	REMARKS
1	Z33238	SIDE WALL	1		X	X	(SUB FOR AZ22447)
2	Z33240	SIDE WALL	1		X	X	(SUB FOR AZ22449)
3	AZ22564	GUARD	1		X	X	
4	AZ22565	DOOR	1	- 006195	X		
	AZ24897	GUARD	1	006196 -	X	X	
5	AZ22566	GUARD	1		X	X	
6	AZ22567	BRACE	1		X	X	
7	AZ23677	HOLDER	1		X	X	
8	AZ23678	RETAINER	1		X	X	
9	AZ23679	ROD	1		X	X	
10	AZ24889	HOLDER	1	006196 -	X	X	
11	Z33554	HOLDER	1		X	X	
12	Z34599	HOLDER	1		X	X	
13	Z34604	PIN	1		X	X	
14	Z34605	ROD	1		X	X	
15	AZ23253	LATCH	4		X	X	
16	Z34136	WASHER	4		X	X	
17	Z26250	WASHER	AR		X	X	
18	AZ23682	CLIP	2		X	X	
19	21M7081	SCREW	AR		X	X	M8 X 15
20	14M7029	NUT	AR		X	X	M8
21	12M7008	LOCK WASHER	AR		X	X	8 MM
22	21M7031	SCREW	AR		X	X	M6 X 15
23	14M7027	NUT	AR		X	X	M6
24	12M7012	LOCK WASHER	AR		X	X	6 MM
25	19M7375	CAP SCREW	AR		X	X	M6 X 18
26	19M7139	CAP SCREW	AR		X	X	M8 X 20
27	AZ23680	HOLDER	1	- 006195	X		

COPYRIGHT©1994 - 2008 DEERE & COMPANY Moline, Illinois All rights reserved

(1A20) CRANKSHAFT FOR 0.254MM(0.010 IN.)UNDERSIZE BEARINGS
VILEBREQUIN POUR PALIERS COTE REPAR,0.254MM(0.010IN.)
KURBELWELLE MIT 0,254MM(0,010IN.)KLEINEREM LAGERDURCHMESSER
ALBERO A GOMITO CON BRONZINE MINORATI DI 0,254MM(0.01 IN.)
CIGUENAL CON DIAMETRO,DE COJINETES REDUCIDO 0,254MM /0,010IN
VEVAXEL MED UNDERDIMENS. RAMLAGER(0,254MM-0,01 IN MINDRE)

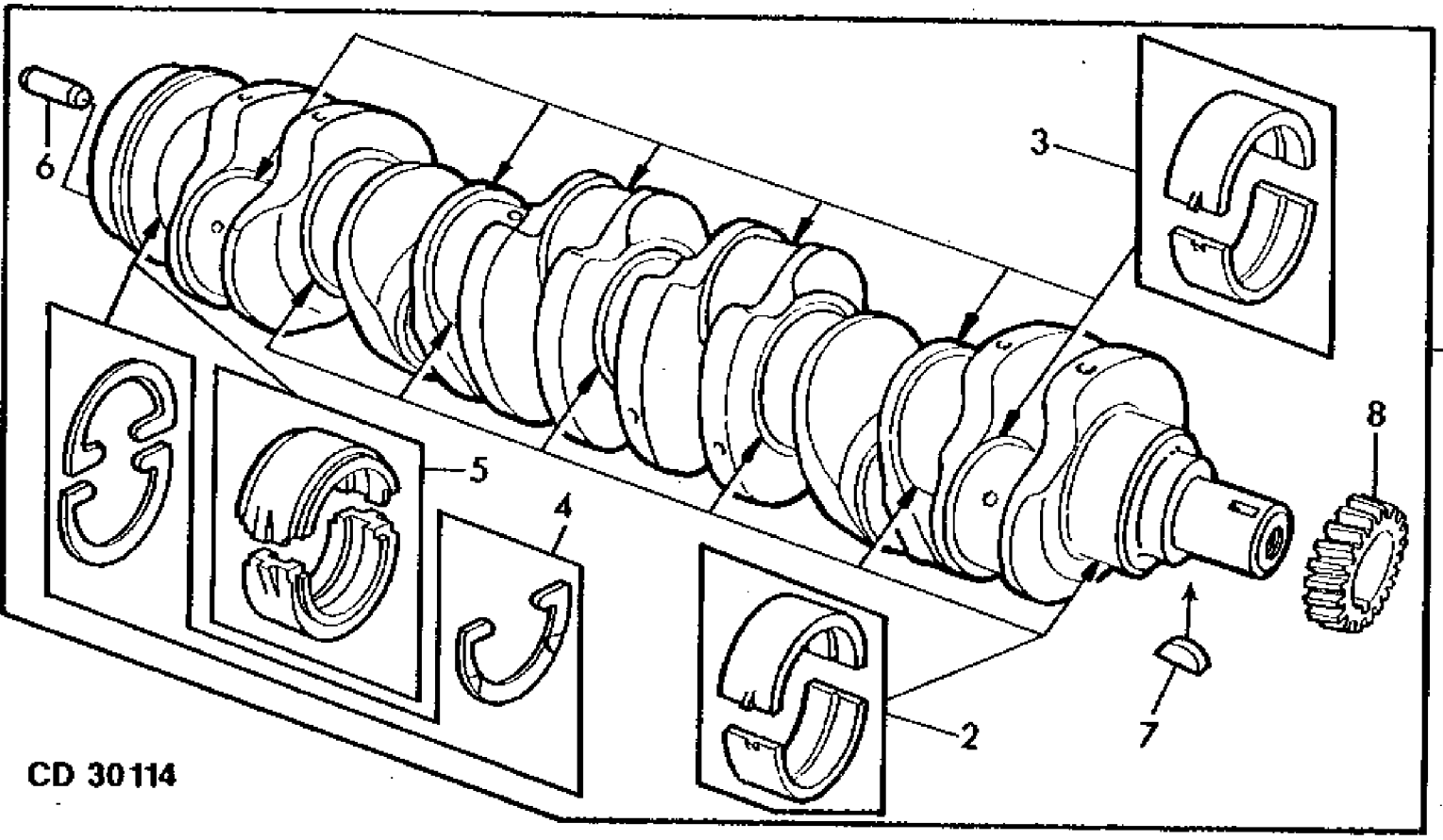

COPYRIGHT©1994 - 2008 DEERE & COMPANY Moline, Illinois All rights reserved

(1A20) CRANKSHAFT FOR 0.254MM(0.010 IN.)UNDERSIZE BEARINGS
VILEBREQUIN POUR PALIERS COTE REPAR,0.254MM(0.010IN.)
KURBELWELLE MIT 0,254MM(0,010IN.)KLEINEREM LAGERDURCHMESSER
ALBERO A GOMITO CON BRONZINE MINORATI DI 0,254MM(0.01 IN.)
CIGUENAL CON DIAMETRO,DE COJINETES REDUCIDO 0,254MM /0,010IN
VEVAXEL MED UNDERDIMENS. RAMLAGER(0,254MM-0,01 IN MINDRE)

KEY	PART NO.	PART NAME	QTY	ENGINE SERIAL NO.	975	975HY	REMARKS
1	RE26205	KIT	AR	- 403755	X	X	(A) KIT, MARKED "R" (SUB FOR DD13896)
2	RE27353	KIT	6	- 403755	X	X	ID = -0.254 MM (.010") (KIT (2) R87750)
3	RE27349	KIT	6	- 403755	X	X	ID = -0.254 MM (.010") (KIT (2) R87748)
4	RE13571	KIT	1	- 403755	X	X	REAR, TK = STANDARD (KIT (3) R78598)
5	RE27351	KIT	1	- 403755	X	X	REAR, ID = -0.254 MM (0.010") (KIT (2) R87749)
6	A120R	DOWEL PIN	1	- 403755	X	X	
7	26H72	SHAFT KEY	1	- 403755	X	X	"18" X 5/8"
8	T20094	GEAR	1	- 403755	X	X	Z = 24

(A) CHECK LOCAL AVAILABILITY
VERIFIER DISPONIBILITE LOCALE
LOKALE VERFUEGBARKEIT UEBERPRUEFEN
ESAMINARE SI OTTENIBILE
VERIFICAR EL SUMINISTRO LOCAL
KONTROLLERA ATKOMLIGHET

COPYRIGHT©1994 - 2008 DEERE & COMPANY Moline, Illinois All rights reserved

(1A19) CRANKSHAFT-BEARINGS
PALIERS DE VILEBREQUIN
KURBELWELLEN-LAGER
BRONZINE DI BANCO
COJINETES DE BANCADA
RAMLAGER

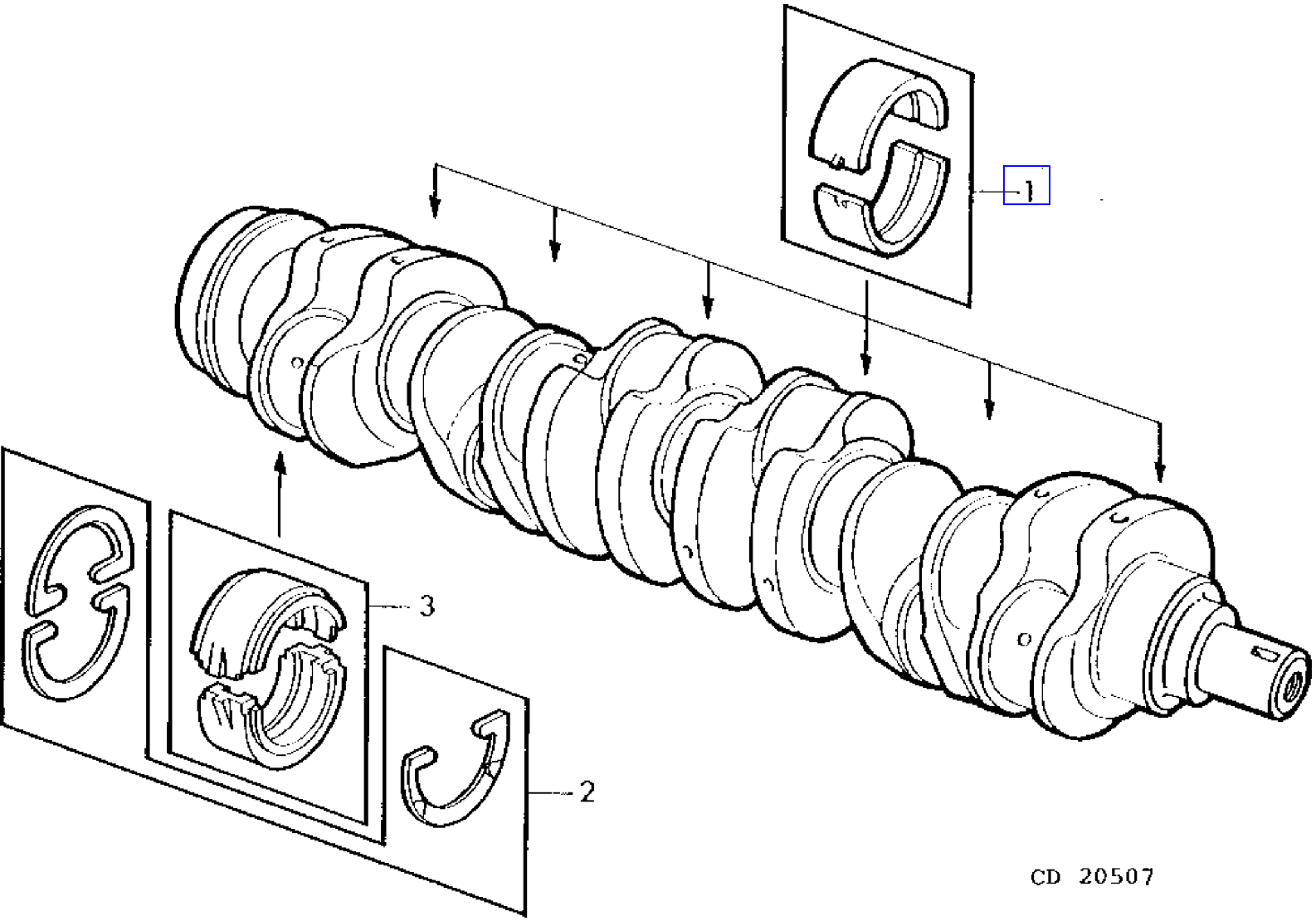

COPYRIGHT©1994 - 2008 DEERE & COMPANY Moline, Illinois All rights reserved

(1A19) CRANKSHAFT-BEARINGS
PALIERS DE VILEBREQUIN
KURBELWELLEN-LAGER
BRONZINE DI BANCO
COJINETES DE BANCADA
RAMLAGER

KEY	PART NO.	PART NAME	QTY	SERIAL NO.	975	975HY/4	REMARKS
1	RE27352	KIT	6	- 403755	X	X	ID = STANDARD (KIT (2) R83380) (SUB FOR AT21140 KIT (2) T23214)
	RE27353	KIT	AR	- 403755	X	X	ID = -0.254 MM (0.010") (KIT (2) R87550) (SUB FOR AT21108 KIT (2) T23552) (SUB FOR AT21110 KIT (2) T23554)
	RE27360	KIT	AR	- 403755	X	X	ID = -0.508 MM (0.020") (KIT (2) R87756) (SUB FOR AT21112 KIT (2) T23556)
	RE27368	KIT	AR	- 403755	X	X	ID = -0.762 MM (0.030") (KIT (2) R87559) (SUB FOR AT21114 KIT (2) T23558)
2	RE13571	KIT	1	- 403755	X	X	TK = STANDARD (KIT (3) R78598)
	AR95932	KIT	AR	- 403755	X	X	TK = 0.17 MM (0.007") (KIT (3) R64851)
3	RE27350	KIT	1	- 403755	X	X	REAR, ID = STANDARD (KIT (2) R83381) (SUB FOR AR81786 KIT (2) R64264) (SUB FOR AT21139 KIT (2) T23215)
	RE27351	KIT	AR	- 403755	X	X	REAR, ID = -0.254 MM (.010") (KIT (2) R87749) (SUB FOR AR81787 KIT (2) R64847) (SUB FOR AR81788 KIT (2) R64848) (SUB FOR AT21130 KIT (2) T23574) (SUB FOR AT21132 KIT (2) T23576)
	RE27359	KIT	AR	- 403755	X	X	REAR, ID = -0.508 MM (0.020") (KIT (2) R87755) (SUB FOR AR81789 KIT (2) R64849) (SUB FOR AT21134 KIT (2) T23578)
	RE27366	KIT	AR	- 403755	X	X	REAR, ID = -0.762 MM (0.030") (KIT (2) R87758) (SUB FOR AR81790 KIT (2) R64850) (SUB FOR AT21136 KIT (2) T23580)

COPYRIGHT©1994 - 2008 DEERE & COMPANY Moline, Illinois All rights reserved

(1A17) CRANKSHAFT/TIMING GEARS
VILEBREQUIN/DISTRIBUTION
KURBELWELLE/STEUERRAEDER
ALBERO A COLLI/INGRANAGGI DISTRIBUZIONE
CIGUENAL/PIONES DE DISTRIBUCION
VEVAXEL/TIDHJUL

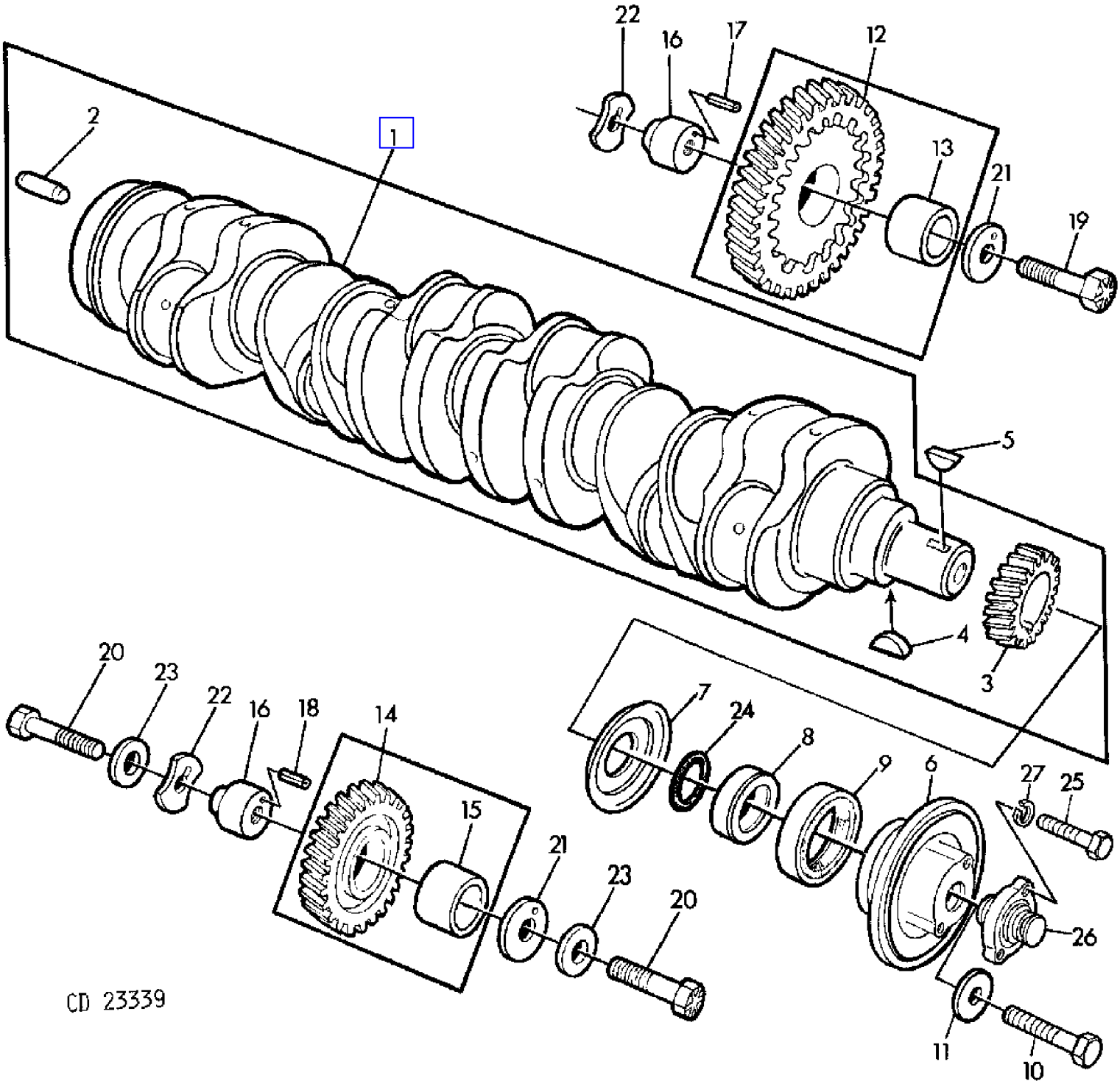

COPYRIGHT©1994 - 2008 DEERE & COMPANY Moline, Illinois All rights reserved

(1A17) CRANKSHAFT/TIMING GEARS
VILEBREQUIN/DISTRIBUTION
KURBELWELLE/STEUERRAEDER
ALBERO A COLLI/INGRANAGGI DISTRIBUZIONE
CIGUENAL/PIONES DE DISTRIBUCION
VEVAXEL/TIDHJUL

KEY	PART NO.	PART NAME	QTY	ENGINE SERIAL NO.		975	975HY/4	REMARKS
1	AT22562	CRANKSHAFT	1			X	X	ASSY, INCL KEYS 2-4
2	A120R	DOWEL PIN	1			X	X	(SUB FOR T26565)
3	T20094	GEAR	1			X	X	Z = 24
4	26H72	SHAFT KEY	1			X	X	1/8" X 5/8"
5	26H27	SHAFT KEY	1			X	X	5/16" X 1-1/8"
6	AR74368	PULLEY, WITH DAMPENER	1			X	X	
7	T20046	OIL SLINGER	1			X	X	
8	T30413	WEAR RING	1			X	X	(ORD R81989 W/ H35244)
	R81989	SLEEVE	1			X	X	
9	AR67942	SEAL	1			X	X	FRONT
10	19H1721	CAP SCREW	1		- 717781	X	X	1/2" X 1-1/2" (ORD CD16045, 19H2473)
	19H2473	CAP SCREW	1	717782	-	X	X	1/2" X 1-3/4" (FOR CD16045)
11	T20217	WASHER	1		- 717781	X	X	(ORD CD16045, 19H2473)
	CD16045	SPACER	1	717782	-	X	X	(FOR 19H2473)
12	AR91660	GEAR	1			X	X	UP, Z = 55, ASSY, INCL KEY 13 (SUB FOR AT18009)
13	T20034	BUSHING	1			X	X	
14	AT24252	GEAR	1			X	X	LOW, ASSY, INCL KEY 15, Z = 45
15	T26321	BUSHING	1			X	X	
16	R89825	PIN	2			X	X	(SUB FOR T26323)
17	34H283	SPRING PIN	1			X	X	3/16" X 1-1/8"
18	34H286	SPRING PIN	1			X	X	3/16" X 1-1/2"
19	T26327	SCREW	1			X	X	
20	T26325	SCREW	2			X	X	
21	T26326	THRUST WASHER	2			X	X	
22	T26324	THRUST WASHER	2			X	X	
23	R76126	WASHER	2			X	X	(SUB FOR R42364)
24	H35244	RING	1			X	X	(FOR R81989)
25	19H2552	CAP SCREW	2			X	X	3/8" X 1-1/8"
26	R61351	PULLEY	1			X	X	
27	12H304	LOCK WASHER	2			X	X	3/8"

COPYRIGHT©1994 - 2008 DEERE & COMPANY Moline, Illinois All rights reserved

(4C14) CROSS SHAKER DRIVE
COMMANDE DU SECOUEUR ROTATIF
ANTRIEB FUER QUERSCHUETTLER
COMANDO DELLO SCUOTITORE INCROCIATO
TRANSMISION DEL SACUDIDOR TRANSVERSAL
TVARSKAKARENS DRIVNING

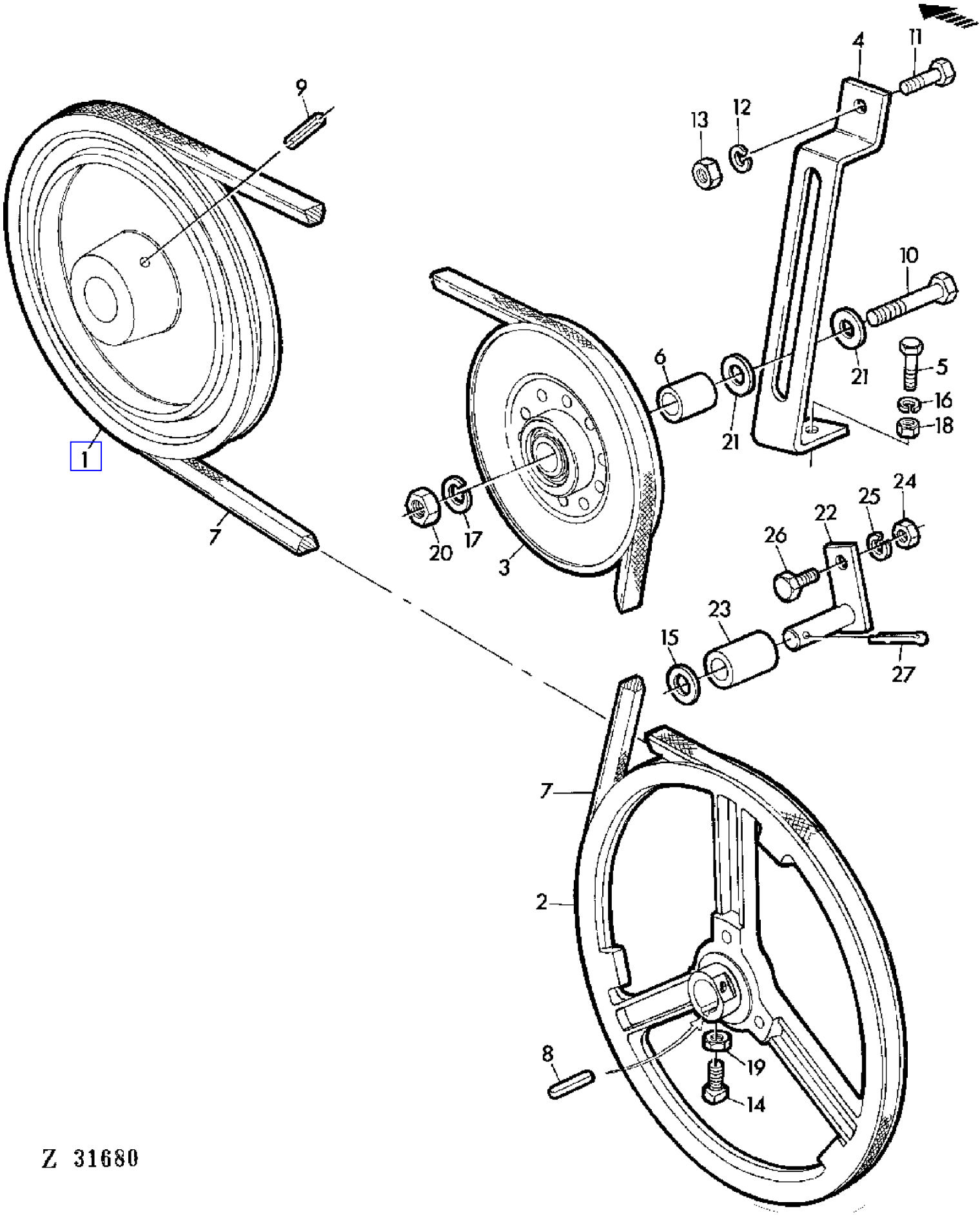

COPYRIGHT©1994 - 2008 DEERE & COMPANY Moline, Illinois All rights reserved

(4C14) CROSS SHAKER DRIVE
COMMANDE DU SECOUEUR ROTATIF
ANTRIEB FUER QUERSCHUETTLER
COMANDO DELLO SCUOTITORE INCROCIATO
TRANSMISION DEL SACUDIDOR TRANSVERSAL
TVARSKAKARENS DRIVNING

KEY	PART NO.	PART NAME	QTY	SERIAL NO.	975	975HY	REMARKS
1	Z10865	PULLEY	1	- 026422	X	X	
2	Z10866	PULLEY	1	- 026422	X	X	
3	AZ24263	IDLER	1	- 026422	X	X	
4	Z33603	TIGHTENER	1	- 026422	X	X	
5	19M7288	CAP SCREW	1	- 026422	X	X	M8 X 30
6	Z32882	SPACER	1	- 026422	X	X	
7	Z33605	BELT	1	- 026422	X	X	
8	49M4111	SHAFT KEY	1	- 026422	X	X	8 X 7 X 40 MM
9	34M7049	SPRING PIN	1	- 026422	X	X	8 X 50 MM
10	19M7273	CAP SCREW	1	- 026422	X	X	M12 X 60
11	19M7167	CAP SCREW	8	- 026422	X	X	M10 X 25
12	12M7013	LOCK WASHER	1	- 026422	X	X	10 MM
13	14M7140	NUT	1	- 026422	X	X	M10
14	Z32433	SET SCREW	2	- 026422	X	X	10 X 30 MM
15	24M7043	WASHER	1	- 026422	X	X	12 MM
16	12M7008	LOCK WASHER	3	- 026422	X	X	8 MM
17	12M7014	LOCK WASHER	1	- 026422	X	X	12 MM
18	14M7029	NUT	3	- 026422	X	X	M8
19	14M7152	NUT	2	- 026422	X	X	M10
20	14M7031	NUT	1	- 026422	X	X	M12
21	24M7102	WASHER	2	- 026422	X	X	14 MM
22	AZ23913	RETAINER	1	- 026422	X	X	
23	Z34900	BUSHING	1	- 026422	X	X	
24	14M7027	NUT	1	- 026422	X	X	M6
25	12M7012	LOCK WASHER	1	- 026422	X	X	6 MM
26	19M7375	CAP SCREW	1	- 026422	X	X	M6 X 18
27	11M7013	COTTER PIN	1	- 026422	X	X	3,2 X 20 MM

COPYRIGHT©1994 - 2008 DEERE & COMPANY Moline, Illinois All rights reserved

(4C16) CROSS SHAKER DRIVE
COMMANDE DU SECOUEUR ROTATIF
ANTRIEB FUER QUERSCHUETTLER
COMANDO SCUOTITORE INCROCIATO
TRANSMISION DEL SACUDIDOR TRANSVERSAL
TVARSKAKARDRIVNING

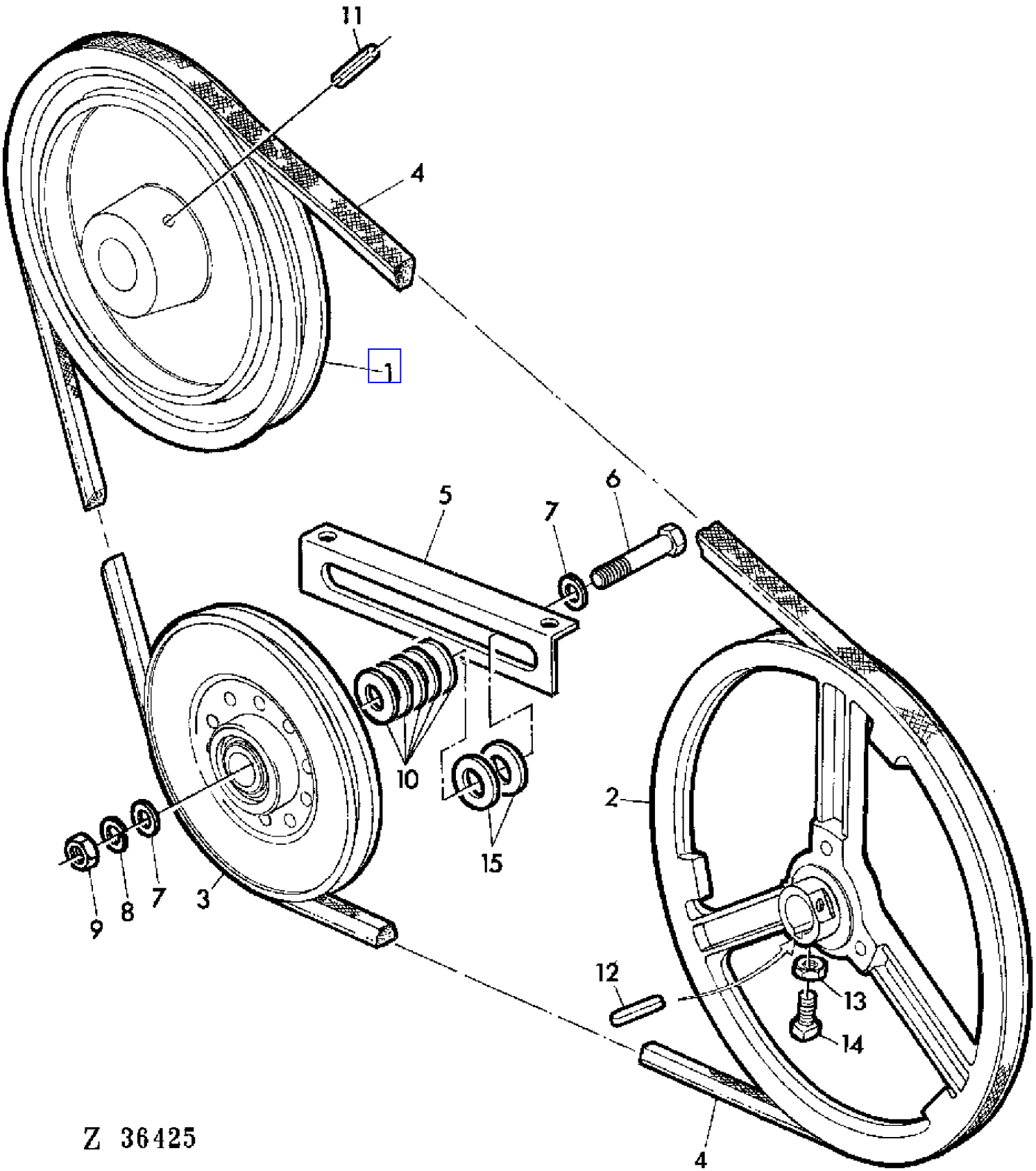

COPYRIGHT©1994 - 2008 DEERE & COMPANY Moline, Illinois All rights reserved

(4C16) CROSS SHAKER DRIVE
COMMANDE DU SECOUEUR ROTATIF
ANTRIEB FUER QUERSCHUETTLER
COMANDO SCUOTITORE INCROCIATO
TRANSMISION DEL SACUDIDOR TRANSVERSAL
TVARSKAKARDRIVNING

KEY	PART NO.	PART NAME	QTY	SERIAL NO.		975	975HY/4	REMARKS
1	Z10865	PULLEY	1	026423	-	X	X	
2	Z10866	PULLEY	1	026423	-	X	X	
3	AZ24263	IDLER	1	026423	-	X	X	
4	Z35965	BELT	1	026423	-	X	X	
5	Z35963	ANGLE	1	026423	-	X	X	
6	19M7273	CAP SCREW	1	026423	-	X	X	M12 X 60
7	24M7102	WASHER	2	026423	-	X	X	14 MM
8	12M7014	LOCK WASHER	1	026423	-	X	X	12 MM
9	14M7031	NUT	1	026423	-	X	X	M12
10	24M7044	WASHER	5	026423	-	X	X	13 MM (SUB FOR Z32882)
11	34M7049	SPRING PIN	1	026423	-	X	X	8 X 50 MM
12	49M4111	SHAFT KEY	1	026423	-	X	X	8 X 7 X 40 MM
13	14M7152	NUT	2	026423	-	X	X	M10
14	Z32433	SET SCREW	2	026423	-	X	X	
15	24M7107	WASHER	2	026423	-	X	X	14 MM

COPYRIGHT©1994 - 2008 DEERE & COMPANY Moline, Illinois All rights reserved

(4C10) CROSS SHAKER PLANETARY DRIVE
TRAIN PLANETAIRE DE SECOUEUR ROTATIF
PLANETENGETRIEBE-QUERSCHUETTLER
COMANDO A PLANETARI DEL SCUOTITORE INCROCIATO
TRANSMISION PLANETARIA DEL SACUDIDOR TRANSVERSAL
TVARSKAKARENS PLANETDREV

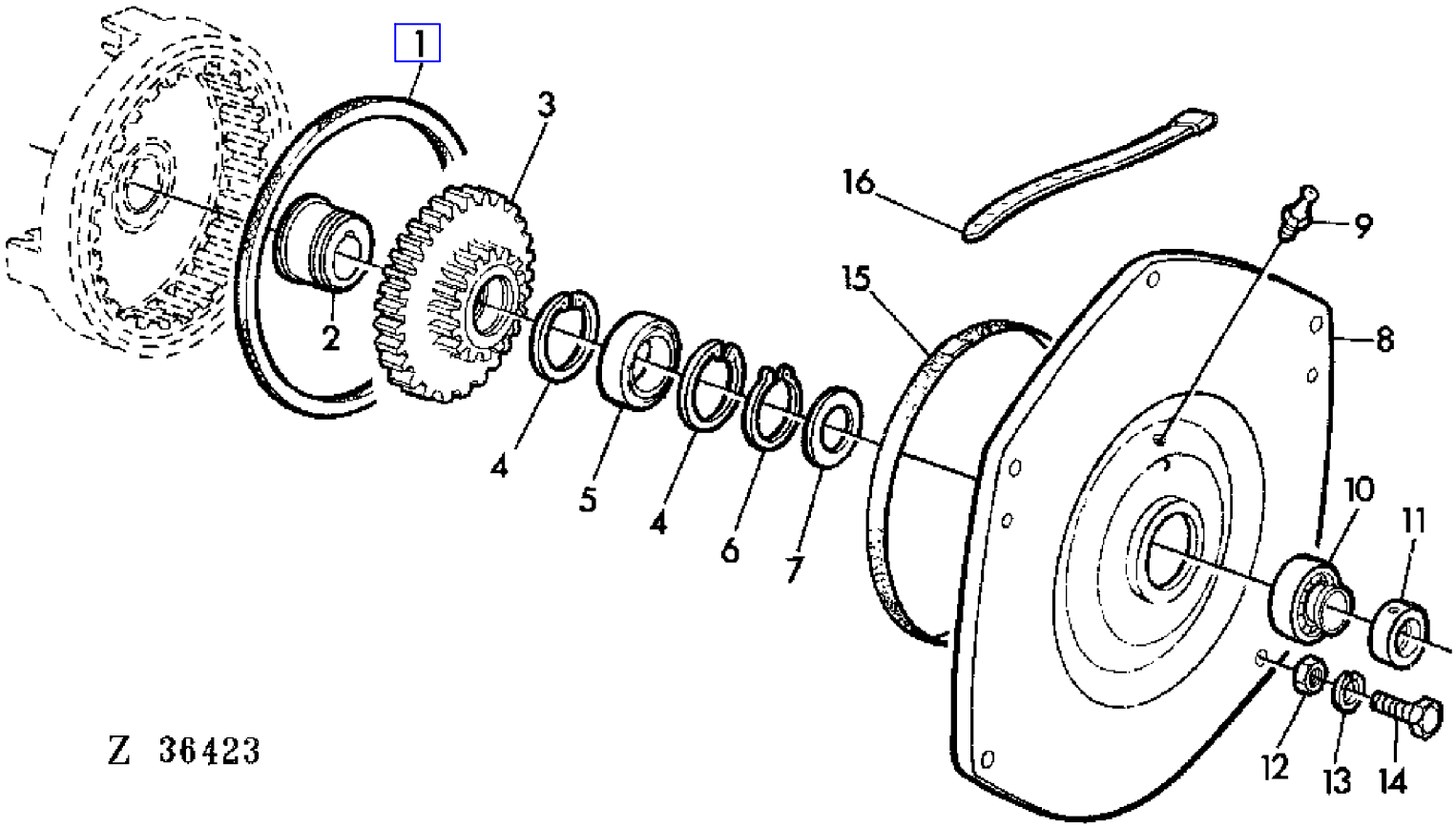

COPYRIGHT©1994 - 2008 DEERE & COMPANY Moline, Illinois All rights reserved

(4C10) CROSS SHAKER PLANETARY DRIVE
TRAIN PLANETAIRE DE SECOUEUR ROTATIF
PLANETENGETRIEBE-QUERSCHUETTLER
COMANDO A PLANETARI DEL SCUOTITORE INCROCIATO
TRANSMISION PLANETARIA DEL SACUDIDOR TRANSVERSAL
TVARSKAKARENS PLANETDREV

KEY	PART NO.	PART NAME	QTY	SERIAL NO.		975	975HY/4	REMARKS
1	Z35972	FELT	1	026423	-	X	X	
2	Z35964	ECCENTRIC	1	026423	-	X	X	
3	Z11056	GEAR	1	026423	-	X	X	
4	40M5099	SNAP RING	2	026423	-	X	X	75 X 2,5 MM
5	JD33004	BALL BEARING	1	026423	-	X	X	
6	40M1837	SNAP RING	1	026423	-	X	X	45 X 1,5 MM
7	24M7137	WASHER	1	026423	-	X	X	24 MM
8	Z11058	FLANGE	1	026423	-	X	X	
9	58M7004	LUBRICATION FITTING	1	026423	-	X	X	
10	JD39102	BALL BEARING	1	026423	-	X	X	
11	AZ10044	ECCENTRIC LOCKING COLLAR	1	026423	-	X	X	
12	14M7029	NUT	7	026423	-	X	X	M8
13	12M7008	LOCK WASHER	7	026423	-	X	X	8 MM
14	19M7163	CAP SCREW	7	026423	-	X	X	M8 X 25
15	Z40982	GASKET	1	026423	-	X	X	
16	Z40981	CLAMP	1	026423	-	X	X	

COPYRIGHT©1994 - 2008 DEERE & COMPANY Moline, Illinois All rights reserved

(4C08) CROSS SHAKER SHAFT AND HUB
ARBRE ET MOYEUX DE SECOUEUR ROTATIF
QUERSCHUETTLERWELLE UND NABEN
ALBERO E MOZZI DELLO SCUOTITORE INCROCIATO
EJE Y CUBO DE LA CRUCETA DEL SACUDIDOR TRANSVERSAL
TVARSKAKARENS AXEL OCH NAV

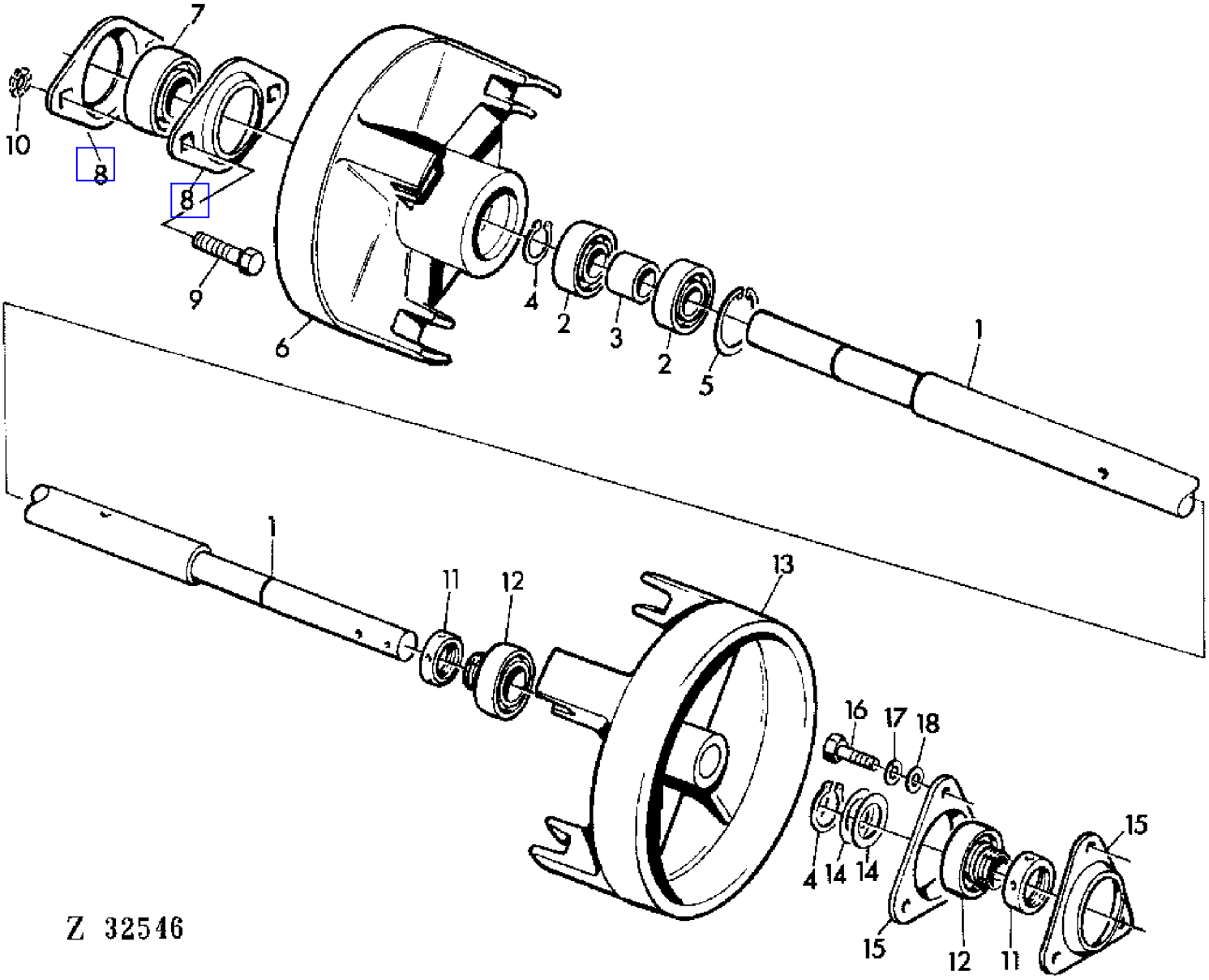

COPYRIGHT©1994 - 2008 DEERE & COMPANY Moline, Illinois All rights reserved

(4C08) CROSS SHAKER SHAFT AND HUB
ARBRE ET MOYEUX DE SECOUEUR ROTATIF
QUERSCHUETTLERWELLE UND NABEN
ALBERO E MOZZI DELLO SCUOTITORE INCROCIATO
EJE Y CUBO DE LA CRUCETA DEL SACUDIDOR TRANSVERSAL
TVARSKAKARENS AXEL OCH NAV

KEY	PART NO.	PART NAME	QTY	SERIAL NO.	975	975HY/4	REMARKS
1	Z30949	SHAFT	1	- 026422	X	X	
2	AZ20217	BALL BEARING	2	- 026422	X	X	
3	Z30956	BUSHING	1	- 026422	X	X	
4	40M1828	SNAP RING	2	- 026422	X	X	25 X 1,2 MM
5	40M1865	SNAP RING	1	- 026422	X	X	52 X 2 MM
6	Z10756	HUB	1	- 026422	X	X	
7	AZ23315	BALL BEARING	1	- 026422	X	X	
8	Z30957	PRESSED FLANGED HOUSING	2	- 026422	X	X	
9	19M7268	CAP SCREW	2	- 026422	X	X	M12 X 25
10	12M7055	WASHER	2	- 026422	X	X	12 MM
11	AZ10044	ECCENTRIC LOCKING COLLAR	2	- 026422	X	X	
12	JD39102	BALL BEARING	2	- 026422	X	X	
13	Z10757	HUB	1	- 026422	X	X	
14	Z24651	WASHER	AR	- 026422	X	X	25 X 1,2 MM
15	P47232	PRESSED FLANGED HOUSING	2		X	X	
16	19M7163	CAP SCREW	3		X	X	M8 X 25
17	12M7008	LOCK WASHER	AR		X	X	8 MM
18	24M7036	WASHER	3		X	X	9 MM

COPYRIGHT©1994 - 2008 DEERE & COMPANY Moline, Illinois All rights reserved

(4C09) CROSS SHAKER SHAFT AND HUB
ARBRE ET MOYEUX DE SECOUEUR ROTATIF
QUERSCHUETTLERWELLE UND NABEN
ALBERO E MOZZI DELLO SCUOTITORE INCROCIATO
EJE Y CUBO DE LA CRUCETA DEL SACUDIDOR TRANSVERSAL
TVARSKAKARAXEL OCH NAV

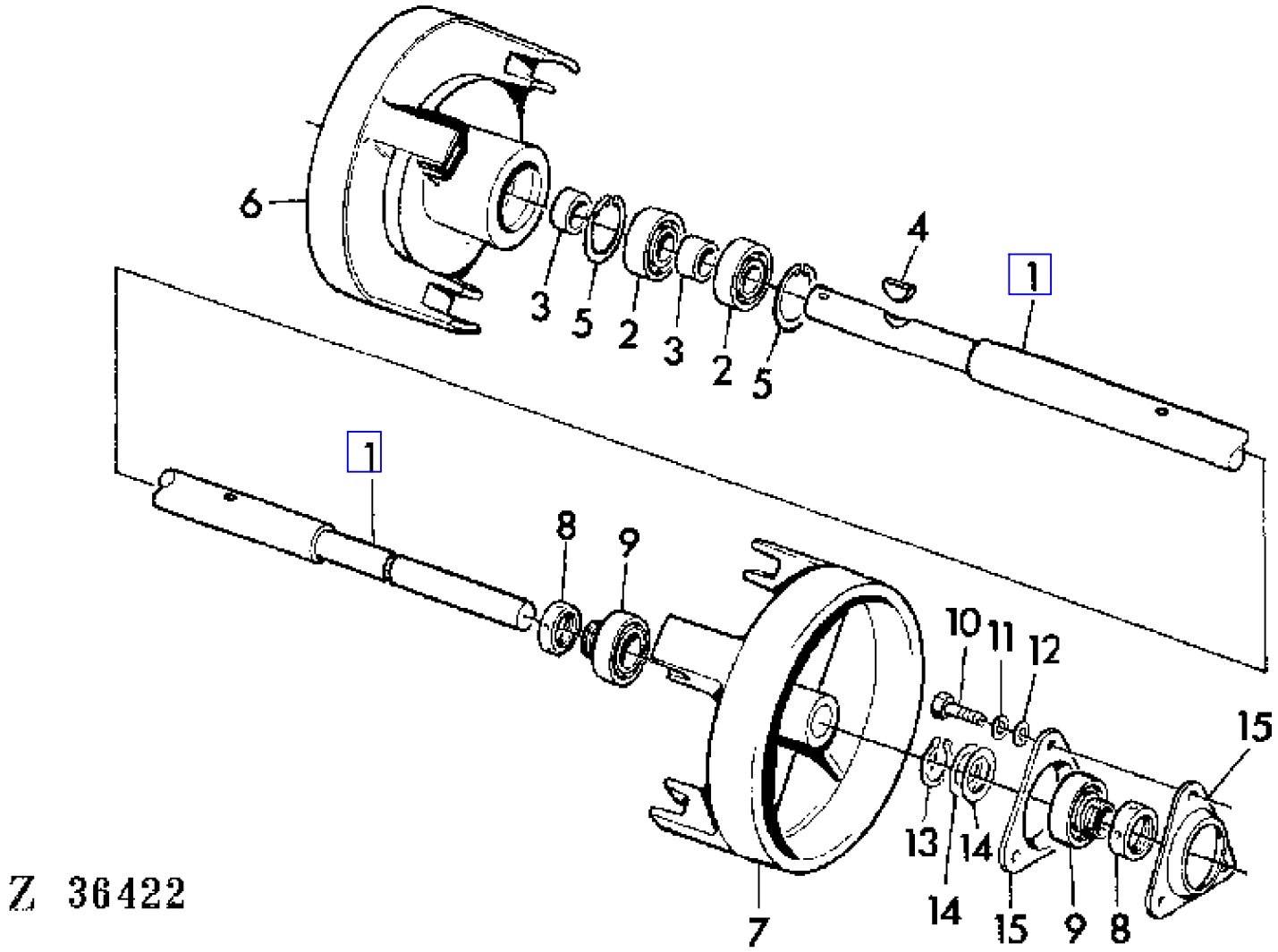

COPYRIGHT©1994 - 2008 DEERE & COMPANY Moline, Illinois All rights reserved

(4C09) CROSS SHAKER SHAFT AND HUB
ARBRE ET MOYEUX DE SECOUEUR ROTATIF
QUERSCHUETTLERWELLE UND NABEN
ALBERO E MOZZI DELLO SCUOTITORE INCROCIATO
EJE Y CUBO DE LA CRUCETA DEL SACUDIDOR TRANSVERSAL
TVARSKAKARAXEL OCH NAV

KEY	PART NO.	PART NAME	QTY	SERIAL NO.		975	975HY/4	REMARKS
1	Z41642	SHAFT	1	026423	-	X	X	(SUB FOR Z35966)
2	AZ20217	BALL BEARING	2	026423	-	X	X	
3	L16548	SPACER	2	026423	-	X	X	
4	26M7001	SHAFT KEY	1	026423	-	X	X	8 X 9 MM
5	40M1865	SNAP RING	2	026423	-	X	X	52 X 2 MM
6	Z11057	HUB	1	026423	-	X	X	
7	Z10757	HUB	1	026423	-	X	X	
8	AZ10044	ECCENTRIC LOCKING COLLAR	2	026423	-	X	X	
9	JD39102	BALL BEARING	2	026423	-	X	X	
10	19M7298	CAP SCREW	3	026423	-	X	X	M8 X 35
11	12M7008	LOCK WASHER	AR	026423	-	X	X	8 MM
12	24M7036	WASHER	AR	026423	-	X	X	9 MM
13	40M1828	SNAP RING	1	026423	-	X	X	25 X 1,2 MM
14	Z24651	WASHER	AR	026423	-	X	X	
15	P47232	PRESSED FLANGED HOUSING	2	026423	-	X	X	

COPYRIGHT©1994 - 2008 DEERE & COMPANY Moline, Illinois All rights reserved

(4C06) CROSS SHAKER STARS
ETOILES DU SECOUEUR ROTATIF
QUERSCHUETTLERSTERNE
STELLE DELLO SCUOTITORE INCROCIATO
CRUCETA DEL SACUDIDOR TRANSVERSAL
TVARSKAKARENS STJARNOR

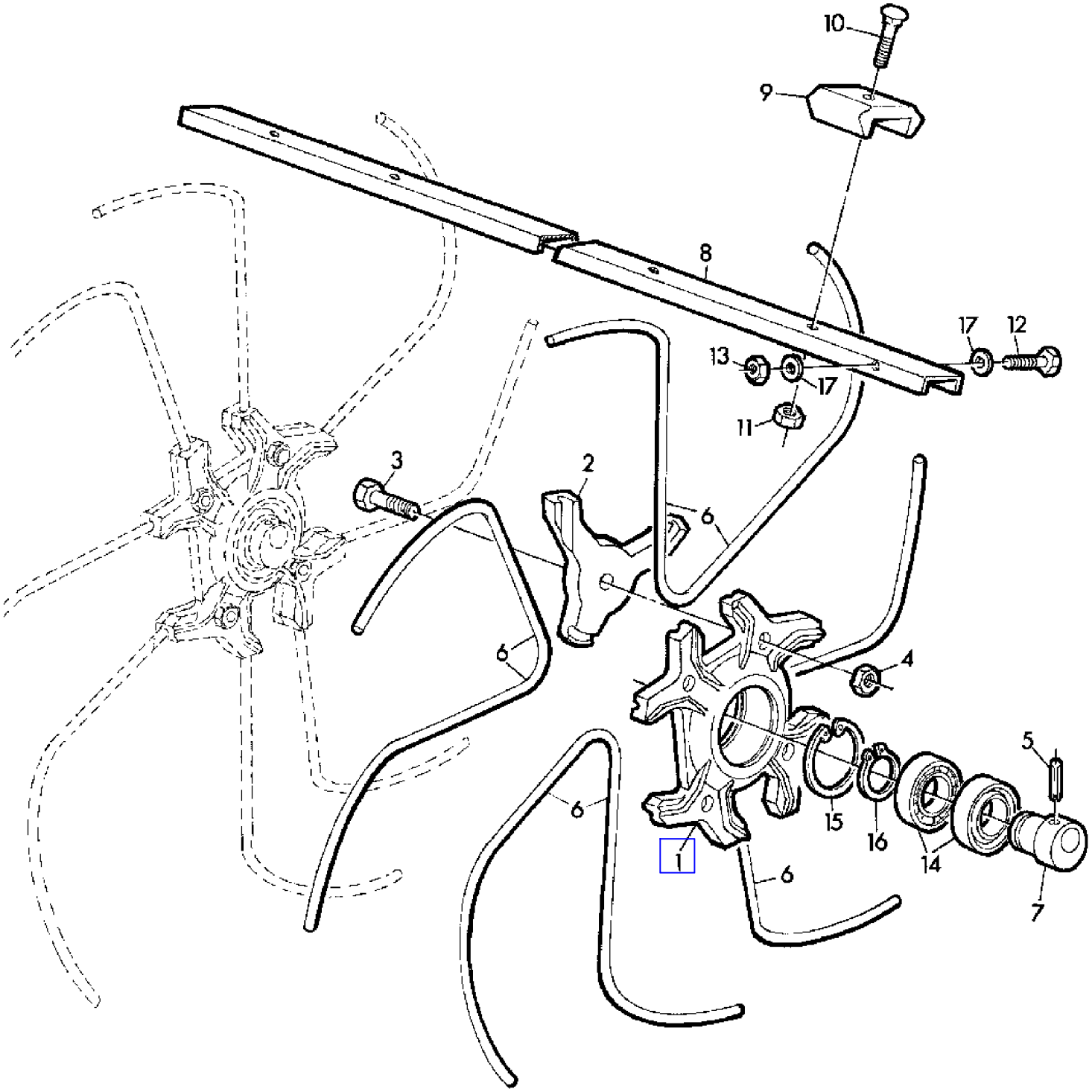

Z 31677

COPYRIGHT©1994 - 2008 DEERE & COMPANY Moline, Illinois All rights reserved

(4C06) CROSS SHAKER STARS
ETOILES DU SECOUEUR ROTATIF
QUERSCHUETTLERSTERNE
STELLE DELLO SCUOTITORE INCROCIATO
CRUCETA DEL SACUDIDOR TRANSVERSAL
TVARSKAKARENS STJARNOR

KEY	PART NO.	PART NAME	QTY	SERIAL NO.	975	975HY/4	REMARKS
1	Z10946	HUB	5		X	X	
2	Z10947	CLAMP	20		X	X	
3	19M7358	CAP SCREW	AR		X	X	M10 X 40
4	14M7167	LOCK NUT	AR		X	X	M10
5	34M7049	SPRING PIN	AR		X	X	8 X 50 MM
6	Z30931	TINE	20		X	X	
7	Z30932	HUB	5		X	X	
8	AZ31160	CHANNEL	4		X	X	(SUB FOR Z30952)
9	Z30955	GUIDE	10		X	X	
10	03M7093	BOLT	AR		X	X	M8 X 25
11	14M7166	LOCK NUT	AR		X	X	M8
12	19M7359	CAP SCREW	8		X	X	M10 X 55
13	14M7167	LOCK NUT	AR		X	X	M10
14	AZ20216	BALL BEARING	10		X	X	
15	40M5099	SNAP RING	5		X	X	75 X 2,5 MM
16	40M1837	SNAP RING	5		X	X	45 X 1,5 MM
17	24M7028	WASHER	AR		X	X	10,5 MM

COPYRIGHT©1994 - 2008 DEERE & COMPANY Moline, Illinois All rights reserved

(4B20) CURTAIN
RIDEAUX
SPRITZTUECHER
TENDINE
DANTALLAS
STANKDUK

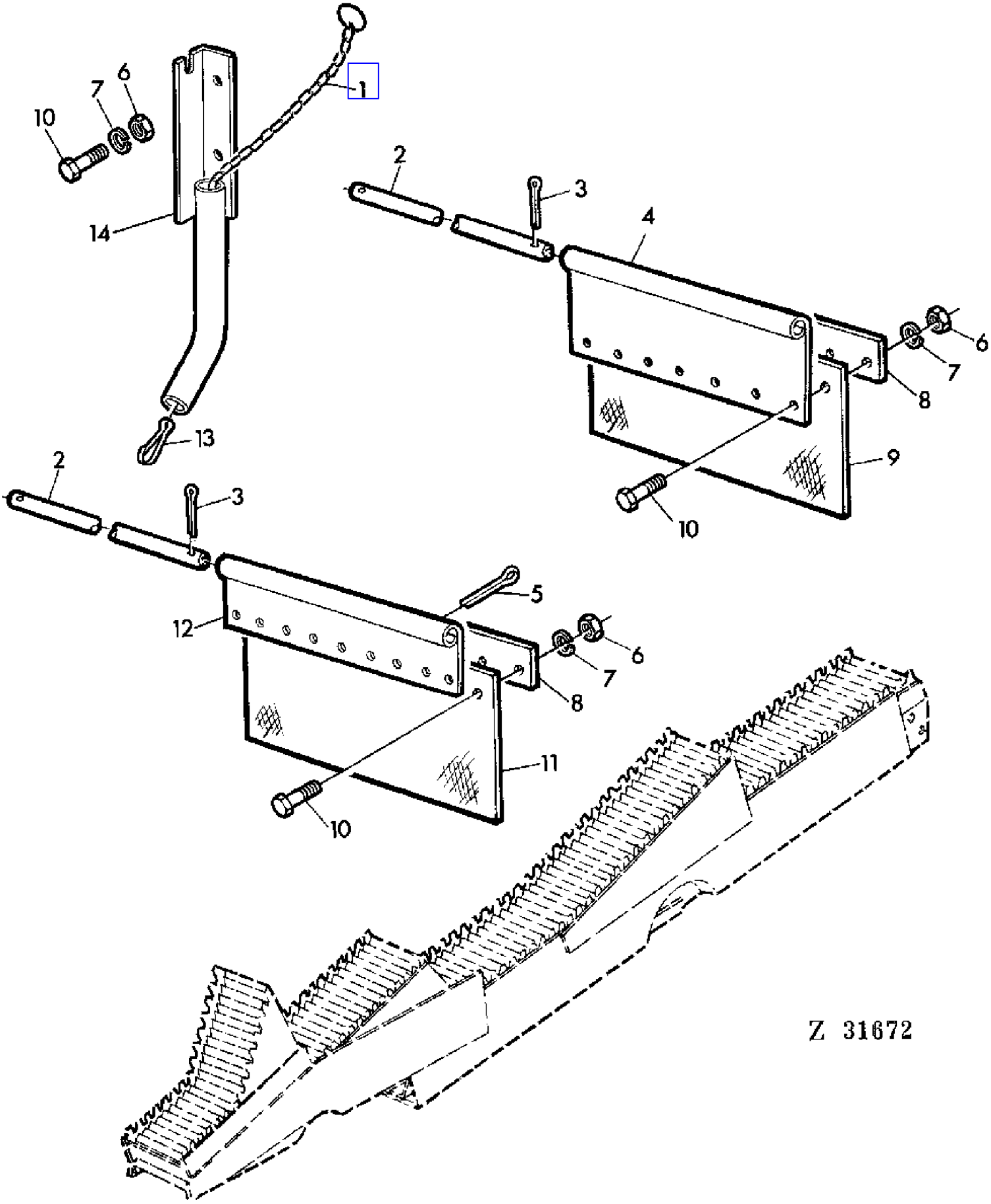

COPYRIGHT©1994 - 2008 DEERE & COMPANY Moline, Illinois All rights reserved

(4B20) CURTAIN
RIDEAUX
SPRITZTUECHER
TENDINE
DANTALLAS
STANKDUK

KEY	PART NO.	PART NAME	QTY	SERIAL NO.		975	975HY/4	REMARKS
1	AZ25390	LINK CHAIN	1	004831	-	X	X	(SUB FOR AZ24905)
2	Z22770	PIN	1			X	X	
3	11M7013	COTTER PIN	4			X	X	3 X 20 MM
4	Z22769	HOLDER	1			X	X	
5	11M7037	COTTER PIN	1			X	X	6,6 X 36 MM
6	14M7027	NUT	AR			X	X	M6
7	12M7012	LOCK WASHER	AR			X	X	6 MM
8	Z22768	STRIPPER	2			X	X	
9	Z35498	LIMIT CURTAIN	1			X	X	
10	19M7159	CAP SCREW	AR			X	X	M6 X 15
11	Z38001	LIMIT CURTAIN	1		- 022077		X	FRONT (ORD Z35498, Z39036)
	Z35498	LIMIT CURTAIN	1	022078	-	X	X	FRONT
12	Z22769	HOLDER	1		- 022077		X	FRONT
	Z39036	HOLDER	1	022078	-	X	X	FRONT
13	99M7039	HOOK	1			X	X	
14	AZ24904	GUIDE	1	004831	-	X	X	

COPYRIGHT©1994 - 2008 DEERE & COMPANY Moline, Illinois All rights reserved

(3F08) CUTTING PLATFORM - DRIVE SHAFT
ARBRE D'ENTRAINEMENT DE LA PLATE-FORME DE COUPE
SCHNEIDWERK-ANTRIEBSWELLE
ALBERO DI COMANDO DELLA PIATTAFORMA DI TAGLIO
PLATAFORMA DE CORTE - EJE DE ACCIONAMIENTO
SKARBORDETS DRIVAXEL

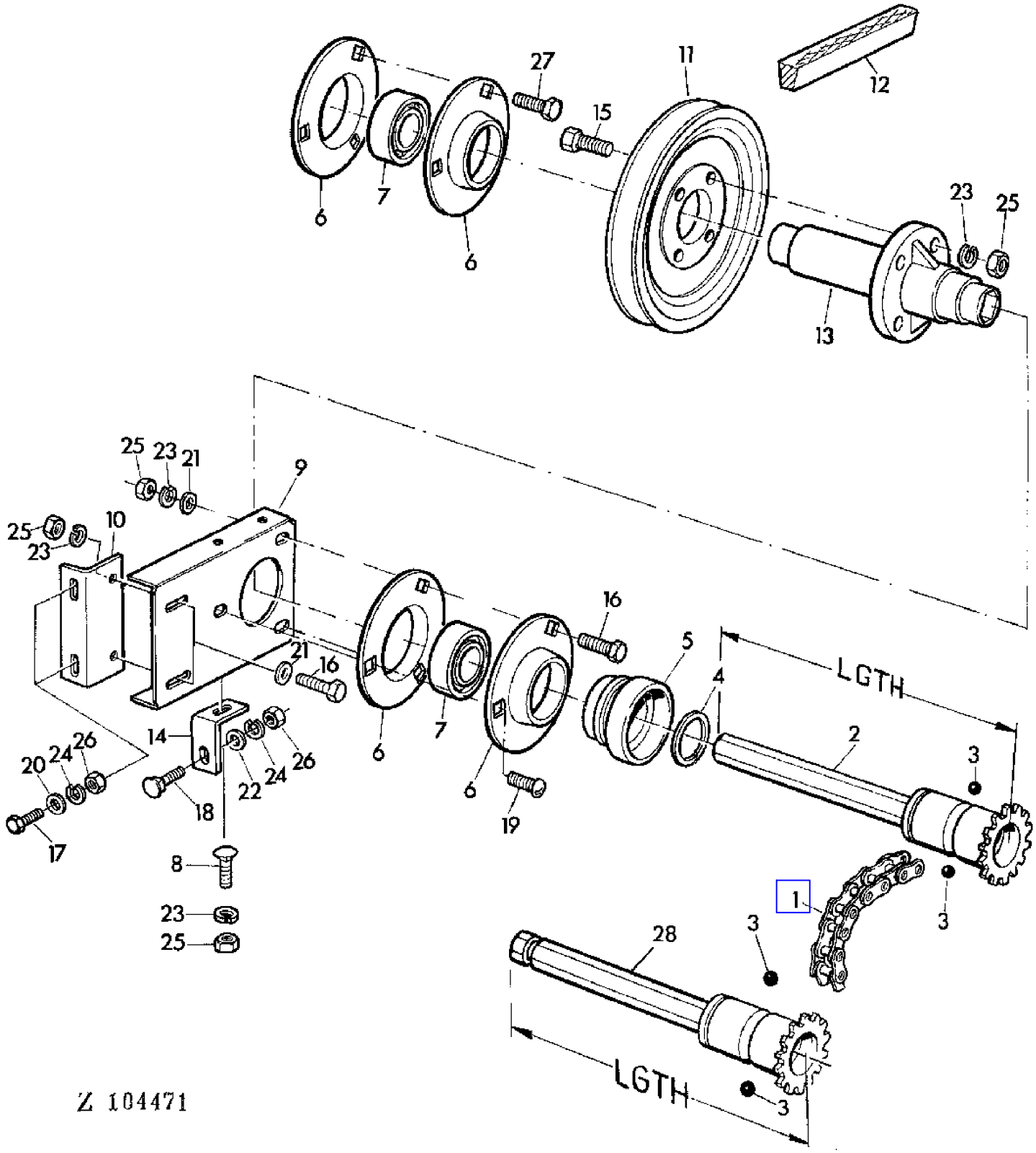

COPYRIGHT©1994 - 2008 DEERE & COMPANY Moline, Illinois All rights reserved

(3F08) CUTTING PLATFORM - DRIVE SHAFT
ARBRE D'ENTRAINEMENT DE LA PLATE-FORME DE COUPE
SCHNEIDWERK-ANTRIEBSWELLE
ALBERO DI COMANDO DELLA PIATTAFORMA DI TAGLIO
PLATAFORMA DE CORTE - EJE DE ACCIONAMIENTO
SKARBORDETS DRIVAXEL

KEY	PART NO.	PART NAME	QTY	SERIAL NO.	975	9HY4	REMARKS
1	AN102383	LINK CHAIN	1		X	X	
2	AZ20402	CLUTCH	1		X	X	LGTH = 370 MM (14.5")
3	N104243	BALL	3		X	X	
4	H25360	SNAP RING	1		X	X	
5	AH89038	QUICK COUPLER	1		X	X	(SUB FOR AN102530)
6	Z34740	QUILL	4		X	X	
7	AZ23315	BALL BEARING	2		X	X	
8	03M7084	BOLT	1		X	X	M10 X 25 |
9	Z35317	BRACKET	1		X	X	
10	Z35318	ANGLE	1		X	X	
11	Z10686	PULLEY	1		X	X	
12	Z25670	BELT	1	- 013567	X		(A)
	Z36949	BELT	1	013568 - 024652	X	X	(A)
	Z39314	BELT	1	024653 -	X	X	(A) LGTH = 4570 MM
13	Z11085	HUB	1		X	X	(SUB FOR Z10949)
14	Z35321	HOLDER	1		X	X	
15	19M7169	CAP SCREW	4		X	X	M10 X 35
16	19M7167	CAP SCREW	AR		X	X	M10 X 25
17	19M7268	CAP SCREW	2		X	X	M12 X 25
18	03M7089	BOLT	1		X	X	M12 X 30
19	21M7190	SCREW	AR		X	X	M10 X 25
20	24M7038	WASHER	2		X	X	14 MM
21	24M7040	WASHER	AR		X	X	11 MM
22	24M7047	WASHER	1		X	X	13 MM
23	12M7013	LOCK WASHER	AR		X	X	10 MM
24	12M7014	LOCK WASHER	3		X	X	12 MM
25	14M7140	NUT	AR		X	X	M10
26	14M7031	NUT	3		X	X	M12
27	19M7168	CAP SCREW	3		X	X	M10 X 30
28	AZ33656	DRIVE SHAFT	1		X	X	LGTH = 550 MM (21.65")

(A) FOR FEEDER CONVEYOR LONG
POUR CONVOYEUR D'ALIMENTATION LONG
FUER SCHRAEGFOERDERER LANG
PER COLLO ALIMENTATORE LUNGO
PARA ELEVADOR DE MIES LARGO
FOR LANG INMATNINGSELEVATOR

COPYRIGHT©1994 - 2008 DEERE & COMPANY Moline, Illinois All rights reserved

(3F06) CUTTING PLATFORM DRIVE
ENTRAINEMENT DE LA PLATE-FORME DE COUPE
SCHNEIDWERK-ANTRIEB
COMANDO PIATTAFORMA DI TAGLIO
TRANSMISION DE LA PLATAFORMA DE CORTE
SKARBORDETS DRIVNING

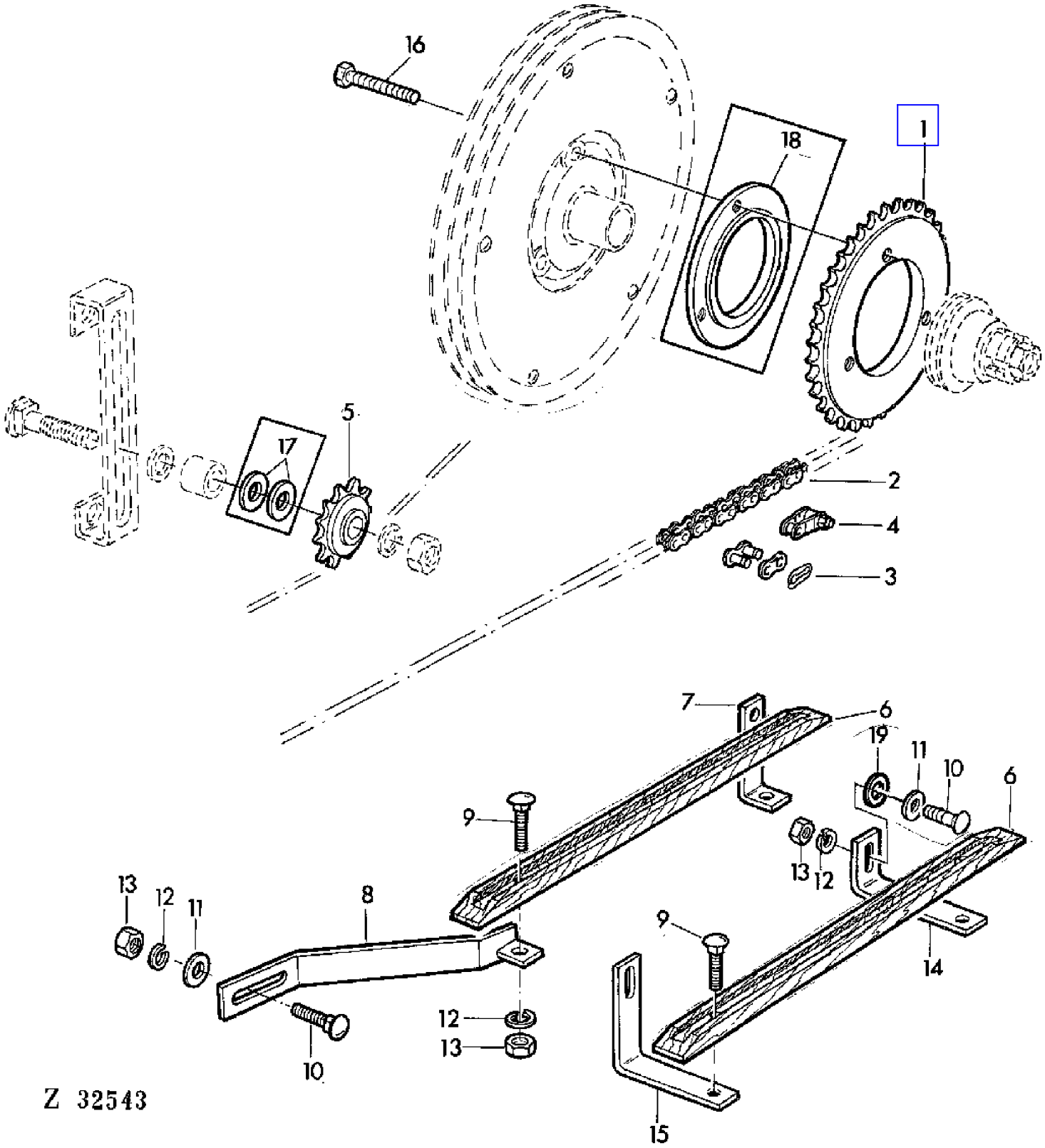

COPYRIGHT©1994 - 2008 DEERE & COMPANY Moline, Illinois All rights reserved

(3F06) CUTTING PLATFORM DRIVE
ENTRAINEMENT DE LA PLATE-FORME DE COUPE
SCHNEIDWERK-ANTRIEB
COMANDO PIATTAFORMA DI TAGLIO
TRANSMISION DE LA PLATAFORMA DE CORTE
SKARBORDETS DRIVNING

KEY	PART NO.	PART NAME	QTY	SERIAL NO.		975	975HY/4	REMARKS
1	Z39310	CHAIN SPROCKET	1			X	X	Z = 37 (SUB FOR Z30557)
2	AZ19483	LINK CHAIN	1		- 013567	X		(A) L = 163
	AZ19134	LINK CHAIN	1		- 024836	X	X	L = 146
	AZ25944	LINK CHAIN	1	013568	- 024836	X	X	L = 173
	AZ28816	LINK CHAIN	1	024837	-	X	X	L = 144, INCL KEY 3
	AZ28817	LINK CHAIN	1	024837	-	X	X	(A) L = 172, INCL KEY 3
3	J4216H	CHAIN LINK	1			X	X	
4	J4217H	CHAIN LINK	1			X	X	
5	AN70860	CHAIN SPROCKET	1			X	X	Z = 14
6	Z39577	GUIDE	2			X	X	(SUB FOR Z30544)
	Z39578	GUIDE	2			X	X	(A) (SUB FOR Z30876)
7	Z30543	HOLDER	1		- 010981	X		
	Z36572	HOLDER	1	010982	-	X	X	
8	AZ19140	HOLDER	1		- 010981	X		
	AZ25479	HOLDER	1	010982	-	X	X	
9	03M7098	BOLT	AR			X	X	M10 X 35
10	03M7084	BOLT	AR			X	X	M10 X 25
11	24M7040	WASHER	AR			X	X	11 MM
12	12M7013	LOCK WASHER	AR			X	X	10 MM
13	14M7140	NUT	AR			X	X	M10
14	Z30541	ANGLE	1		- 010981	X		
	Z36573	HOLDER	1	010982	-	X	X	
15	Z30540	ANGLE	1		- 010981	X		
	Z36574	HOLDER	1	010982	-	X	X	
16	19M7181	CAP SCREW	3			X	X	M10 X 55
17	24M7053	WASHER	2	006336	- 010981	X		17 MM
18	Z36527	RING	1	006336	- 010981	X		
19	24M7101	WASHER	1			X	X	11,5 MM

(A) FOR FEEDER CONVEYOR LONG
POUR CONVOYEUR D'ALIMENTATION LONG
FUER SCHRAEGFOERDERER LANG
PER COLLO ALIMENTATORE LUNGO
PARA ELEVADOR DE MIES LARGO
FOR LANG INMATNINGSELEVATOR

COPYRIGHT©1994 - 2008 DEERE & COMPANY Moline, Illinois All rights reserved

(2E06) CUTTING PLATFORM PRESSURE INDICATOR
MANOMETRE - PLATE-FORME DE COUPE
DRUCKANZEIGE-SCHNEIDWERK
INDICATORE PRESSIONE PER PIATTAFORMA DI TAGLIO
INDICADOR DE PRESION-PLATAFORMA DE CORTE
TRYCKMATARE FOR SKARBORD

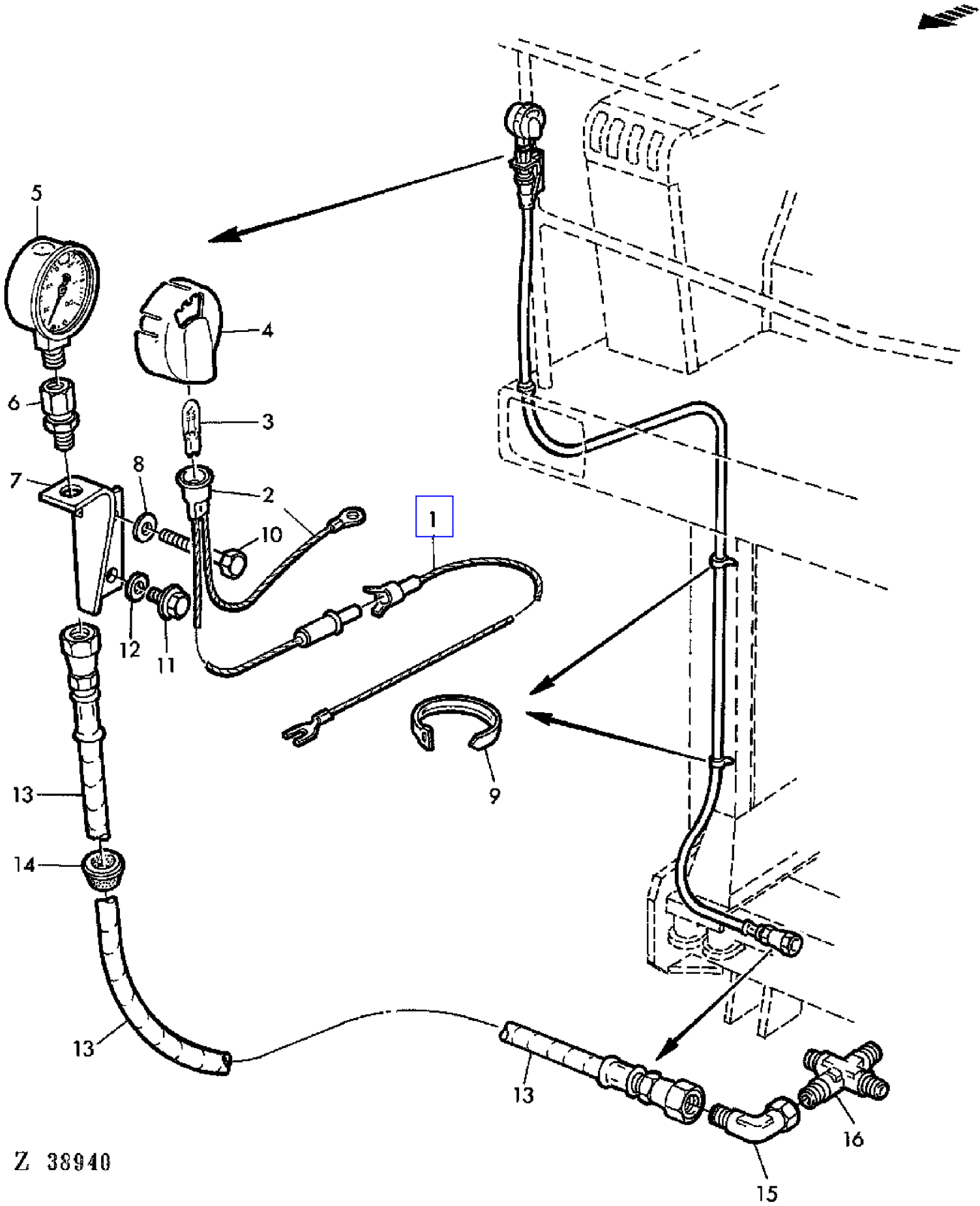

COPYRIGHT©1994 - 2008 DEERE & COMPANY Moline, Illinois All rights reserved

(2E06) CUTTING PLATFORM PRESSURE INDICATOR
MANOMETRE - PLATE-FORME DE COUPE
DRUCKANZEIGE-SCHNEIDWERK
INDICATORE PRESSIONE PER PIATTAFORMA DI TAGLIO
INDICADOR DE PRESION-PLATAFORMA DE CORTE
TRYCKMATARE FOR SKARBORD

KEY	PART NO.	PART NAME	QTY	SERIAL NO.	975	975HY/4	REMARKS
1	AZ31875	POWER CORD	1		X	X	
2	AH109610	SOCKET	1		X	X	
3	AH108380	BULB	1		X	X	
4	H111378	COVER	1		X	X	
5	AH108080	PRESSURE GAUGE	1		X	X	
6	AB18206	ADAPTER	1		X	X	
7	H109300	BRACKET	1		X	X	
8	24M7054	WASHER	1		X	X	AR, 6,4 MM
9	H77698	TIE BAND	AR		X	X	
10	19M5938	CAP SCREW	1		X	X	AR, M6 X 40
11	H78354	SCREW	AR		X	X	AR
12	24H1714	WASHER	AR		X	X	AR
13	AZ31905	HYDRAULIC HOSE	1		X	X	
14	N119177	GROMMET	1		X	X	
15	AZ22524	ELBOW FITTING	1		X	X	
16	Z33631	FITTING	1		X	X	

COPYRIGHT©1994 - 2008 DEERE & COMPANY Moline, Illinois All rights reserved

(4B06) CYLINDER AND BEATER VARIABLE SPEED DRIVE ADJUSTING BRACKET
ETRIER REGLABLE POUR VARIATEUR DU BATTEUR ET DU TIRE-PAILLE
VERSTELLBUEGEL FUER DRESCH-UND WENDETROMMELVARIATOR
BRACCIO DEL TENDITORE PER VARIATORE BATTITORE E LANCIAPAGLIA
HORQUILLA PARA VARIADORES DEL CILINDRO DESGRAN.Y BATIDOR
JUSTERGAFFEL FOR CYLINDERNS OCH HALMVINDANS VARIATOR

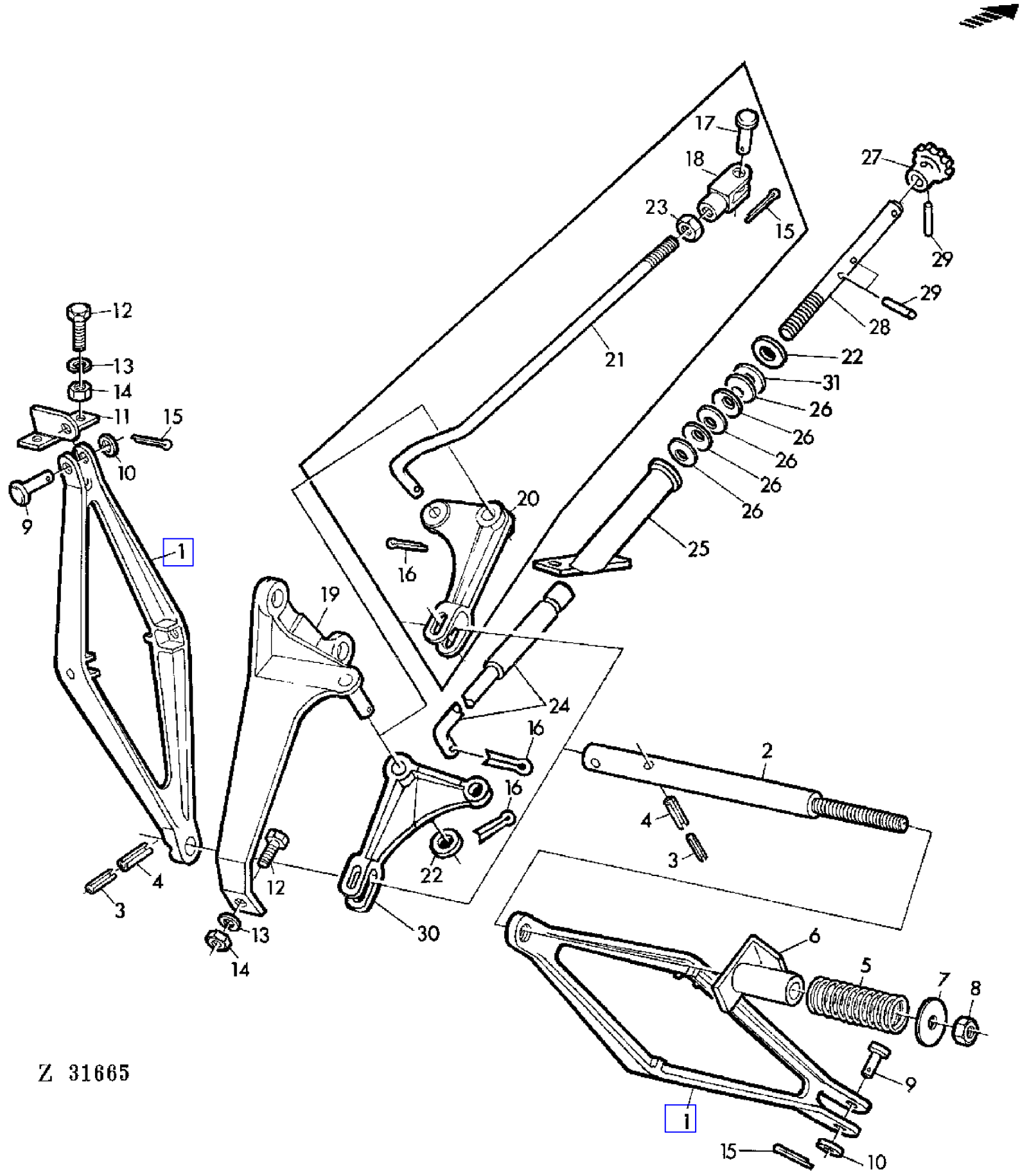

COPYRIGHT©1994 - 2008 DEERE & COMPANY Moline, Illinois All rights reserved

(4B06) CYLINDER AND BEATER VARIABLE SPEED DRIVE ADJUSTING BRACKET
ETRIER REGLABLE POUR VARIATEUR DU BATTEUR ET DU TIRE-PAILLE
VERSTELLBUEGEL FUER DRESCH-UND WENDETROMMELVARIATOR
BRACCIO DEL TENDITORE PER VARIATORE BATTITORE E LANCIAPAGLIA
HORQUILLA PARA VARIADORES DEL CILINDRO DESGRAN.Y BATIDOR
JUSTERGAFFEL FOR CYLINDERNS OCH HALMVINDANS VARIATOR

KEY	PART NO.	PART NAME	QTY	SERIAL NO.	975	975HY	REMARKS
1	Z10146	ADJUSTER	2		X	X	
2	Z38119	SHAFT	1		X	X	(SUB FOR Z33008)
3	34M7058	SPRING PIN	2		X	X	7 X 55 MM
4	34M7056	SPRING PIN	2		X	X	12 X 55 MM
5	Z33007	SPRING	1		X	X	
6	AZ27229	GUIDE	1		X	X	(SUB FOR AZ21981)
7	Z38131	WASHER	1		X	X	
8	14M7170	LOCK NUT	1		X	X	M16
9	Z24490	PIN	2		X	X	
10	24M7111	WASHER	2		X	X	13 MM
11	AZ10407	HOLDER	AR		X	X	
12	19M7167	CAP SCREW	AR		X	X	M10 X 25
13	12M7013	LOCK WASHER	AR		X	X	10 MM
14	14M7140	NUT	AR		X	X	M10
15	11M7019	COTTER PIN	3		X	X	4 X 20 MM
16	11M7020	COTTER PIN	2		X	X	4 X 25 MM
17	45M4901	PIN	1	- 018357	X		
18	Z28421	YOKE	1	- 018357	X		
19	AZ10408	BRACKET	1		X	X	
20	Z10610	LEVER	1	- 018357	X		
21	Z28422	ROD	1	- 018357	X		
22	24M7053	WASHER	2		X	X	17 MM
23	14M7142	NUT	1	- 018357	X		M16
24	AZ27641	ROD	1	018358 -	X	X	
25	AZ27642	SUPPORT	1	018358 -	X	X	
26	Z30588	DISK SPRING	AR	018358 -	X	X	(SUB FOR 47M7006)
27	Z30841	KNOB	1		X	X	
28	Z38398	SPINDLE	1	018358 -	X		
29	34M7032	SPRING PIN	2	018358 -	X	X	
30	Z11206	LEVER	1	018358 -	X	X	
31	24M7118	WASHER	1		X	X	18 X 25 X 1 MM

COPYRIGHT©1994 - 2008 DEERE & COMPANY Moline, Illinois All rights reserved

(1A11) CYLINDER BLOCK
BLOC-CYLINDRES
ZYLINDERBLOCK
BLOCCO CILINDRI
BLOQUE DE CILINDROS
CYLINDERBLOCK

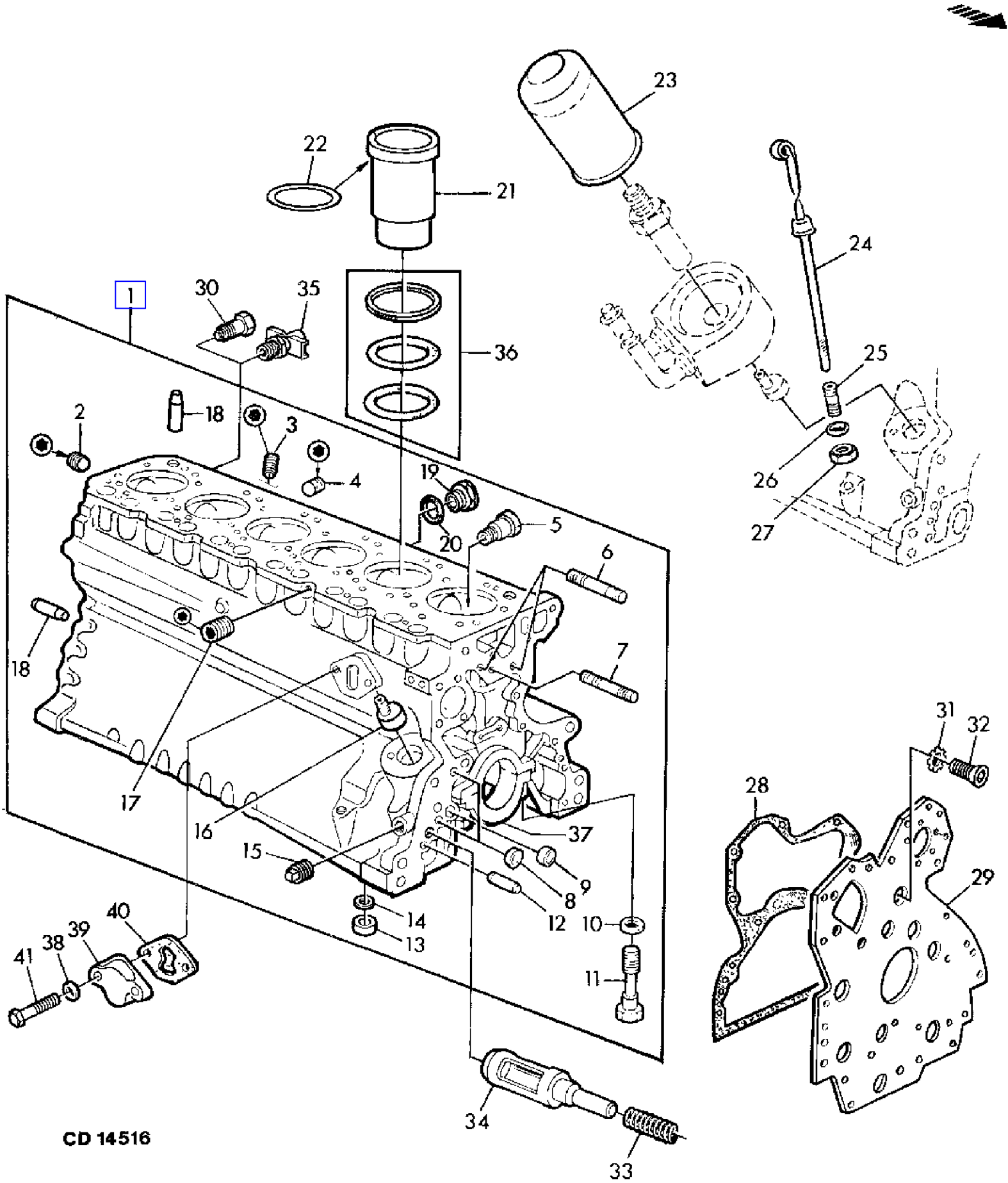

COPYRIGHT©1994 - 2008 DEERE & COMPANY Moline, Illinois All rights reserved

(1A11) CYLINDER BLOCK
BLOC-CYLINDRES
ZYLINDERBLOCK
BLOCCO CILINDRI
BLOQUE DE CILINDROS
CYLINDERBLOCK

KEY	PART NO.	PART NAME	QTY	SERIAL NO.			975	975HY/4	REMARKS
1	RE25591	CYLINDER BLOCK	AR				X	X	ASSY
	AR71514	CYLINDER BLOCK	1		-	245316	X	X	(ORD RE25591, R46625, R62664, R73139, R73140, (26) R85363)
	AR93793	CYLINDER BLOCK	1	245317	-	465212	X	X	(ORD RE25591, R46625, R73139, R73140, (26) R85363) (SUB FOR AR82293)
	AR102254	CYLINDER BLOCK	1	465213	-		X	X	(ORD RE25591, (26) R85363) (SUB FOR AR97275)
2	15H665	PIPE PLUG	1				X	X	3/4"
3	15H624	PIPE PLUG	2				X	X	1/2", REAR, LH - UP, RH (FOR RE25591)
4	15H275	PIPE PLUG	1				X	X	1/4"
5	R54802	ORIFICE	6				X	X	
6	T33279	STUD	2				X	X	3/8"
7	T25701	STUD	1				X	X	3/8"
8	T18891	CAP	2		-	465212	X	X	
	T18891	CAP	1	465213	-		X	X	
9	R26493	BUSHING	1				X	X	
10	T20168	WASHER	14				X	X	
11	T23474	CAP SCREW	14				X	X	1/2"
12	A4879R	DOWEL PIN	2				X	X	
13	R75893	FITTING	1	245317	-		X	X	
14	R75892	O-RING	1	245317	-		X	X	
15	15H255	PIPE PLUG	1				X	X	3/8"
16	T23435	THREADED NIPPLE	1				X	X	
17	15H624	PIPE PLUG	1				X	X	1/2", UP, RH (FOR AR102254)
18	A120R	DOWEL PIN	2				X	X	UP (SUB FOR R26241 APPL)
	A120R	DOWEL PIN	2				X	X	LOW
19	R39741	DRAIN PLUG	1				X	X	(FOR RE25591)
20	U13639	O-RING	1				X	X	(FOR RE25591)
21	R80724	CYLINDER LINER	6				X	X	(SUB FOR R51726)
22	CD15466	SHIM	AR				X	X	TK = 0,05 MM (.002")
	R65833	SHIM	AR				X	X	TK = 0,10 MM (.004")
23	T19044	OIL FILTER	1				X	X	
24	AT21535	DIPSTICK	1				X	X	
25	R61352	THREADED NIPPLE	1				X	X	
26	R10093	O-RING	1				X	X	
27	14H826	NUT	1				X	X	1/2"
28	R73140	GASKET	1				X	X	(SUB FOR T24965)
29	R59430	PLATE	1				X	X	
30	R55233	PIPE PLUG	1				X	X	1/4"
31	12H324	WASHER	5				X	X	3/8"
32	T20166	SCREW	5				X	X	
33	R46625	SPRING	1	465213	-		X	X	
34	R73139	VALVE	1	465213	-		X	X	
35	AT13740	DRAIN VALVE	AR				X	X	1/4"

COPYRIGHT©1994 - 2008 DEERE & COMPANY Moline, Illinois All rights reserved

(1A11) CYLINDER BLOCK
BLOC-CYLINDRES
ZYLINDERBLOCK
BLOCCO CILINDRI
BLOQUE DE CILINDROS
CYLINDERBLOCK

KEY	PART NO.	PART NAME	QTY	SERIAL NO.	975	975HY/4	REMARKS
36	AR65507	O-RING KIT	6		X	X	KIT (3) (SUB FOR AR68318)
37	R65215	BEARING CAP	AR		X	X	
	R79089	CAP	AR		X	X	REAR
38	R20498	WASHER	2		X	X	
39	R27286	COVER	1		X	X	
40	R27285	GASKET	1		X	X	
41	19H1849	CAP SCREW	2		X	X	5/16" X 1-1/4"

COPYRIGHT©1994 - 2008 DEERE & COMPANY Moline, Illinois All rights reserved

(4B18) CYLINDER CHAIN DRIVE
COMMANDE DE BATTEUR PAR CHAINE
DRESCHTROMMEL KETTENANTRIEB
CATENA DI COMANDO DEL BATTITORE
TRANSMISION POR CADENA DEL CILINDRO DESGRANADOR
DRIVKEDJA FOR CYLINDERN

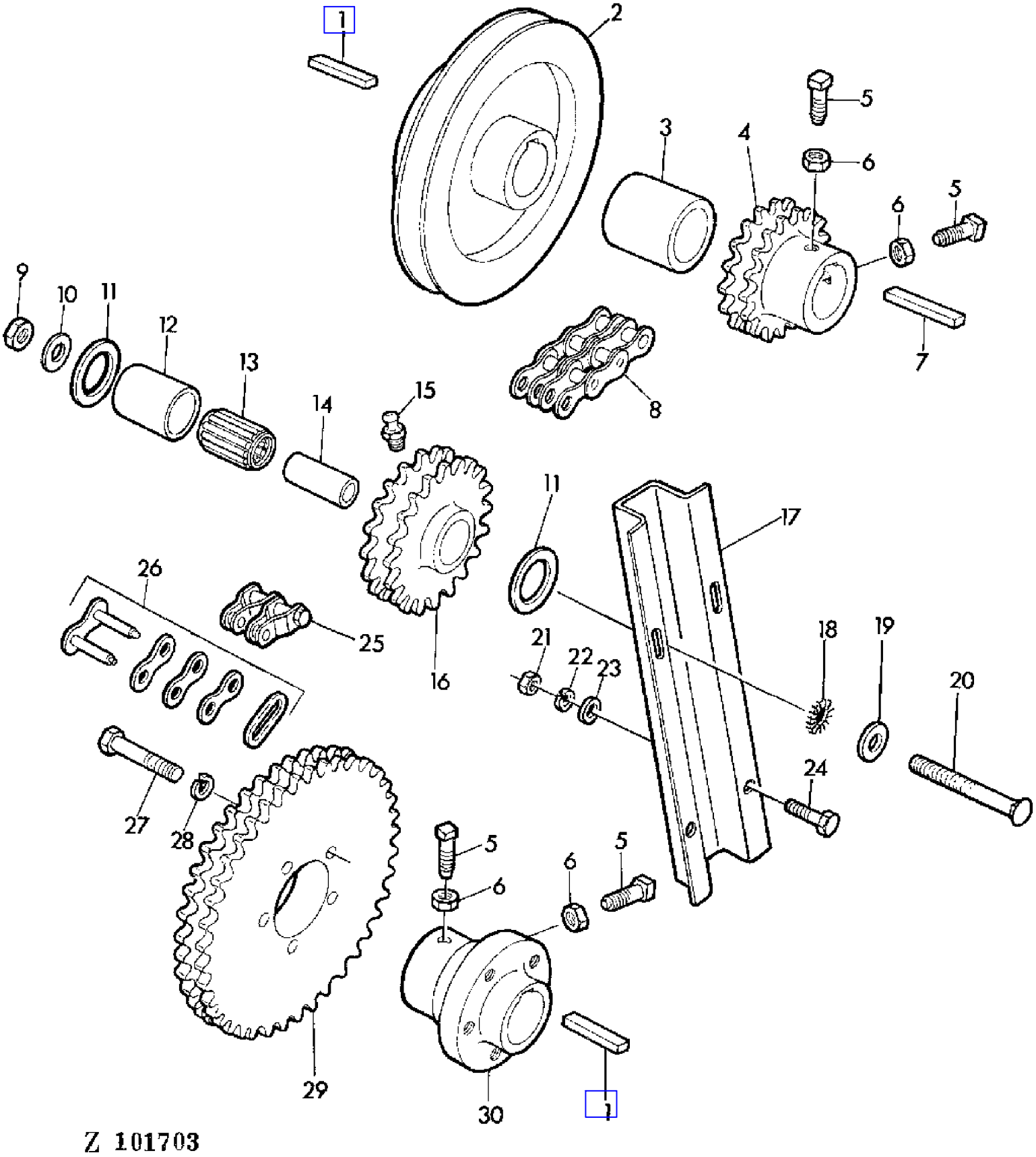

COPYRIGHT©1994 - 2008 DEERE & COMPANY Moline, Illinois All rights reserved

(4B18) CYLINDER CHAIN DRIVE
COMMANDE DE BATTEUR PAR CHAINE
DRESCHTROMMEL KETTENANTRIEB
CATENA DI COMANDO DEL BATTITORE
TRANSMISION POR CADENA DEL CILINDRO DESGRANADOR
DRIVKEDJA FOR CYLINDERN

KEY	PART NO.	PART NAME	QTY	SERIAL NO.	975	975HY/4	REMARKS
1	49M7014	SHAFT KEY	2		X	X	12 X 8 X 50 MM
2	Z11044	PULLEY	1		X	X	
3	Z31875	SPACER	1		X	X	
4	Z30803	CHAIN SPROCKET	1		X	X	Z = 17
	Z30818	CHAIN SPROCKET	1		X	X	Z = 24
5	Z32434	SET SCREW	4		X	X	12 X 30 MM
6	14M7031	NUT	4		X	X	M12
7	49M7015	SHAFT KEY	1		X	X	12 X 8 X 70 MM
8	AZ16728	LINK CHAIN	1		X	X	L = 10
	AZ26700	LINK CHAIN	1		X	X	L = 16, INCL KEY 26
	AZ18000	LINK CHAIN	1		X	X	L = 107, INCL KEYS 25,26
9	14M7168	LOCK NUT	1		X	X	M12
10	24M7114	WASHER	1		X	X	19 MM
11	24H1353	WASHER	2		X	X	9/16" X 2-1/4"
12	JD7455	BEARING RACE	1		X	X	
13	JD7911	ROLLER BEARING	1		X	X	
14	Z23784	BUSHING	1		X	X	
15	JD7759	LUBRICATION FITTING	1		X	X	
16	PK860H	CHAIN SPROCKET	1		X	X	
17	Z32551	HOLDER	1		X	X	
18	12M7054	LOCK WASHER	1		X	X	18 MM
19	24M7049	WASHER	1		X	X	18 MM
20	03M7112	BOLT	1		X	X	M12 X 100
21	14M7029	NUT	4		X	X	M8
22	12M7008	LOCK WASHER	4		X	X	8 MM
23	24M7036	WASHER	4		X	X	9 MM
24	19M7376	CAP SCREW	4		X	X	M8 X 20
25	AL15955	LINK	1		X	X	
26	AL15956	LINK	1		X	X	
27	19M7389	CAP SCREW	5		X	X	M12 X 60
28	12M7014	LOCK WASHER	5		X	X	12 MM
29	H28678	CHAIN SPROCKET	1		X	X	Z = 42
	H30767	CHAIN SPROCKET	1		X	X	Z = 48
	H28679	CHAIN SPROCKET	1		X	X	Z = 59
	Z10589	CHAIN SPROCKET	1		X	X	Z = 76
	Z11149	CHAIN SPROCKET	1		X	X	Z = 96
30	Z10742	HUB	1		X	X	

COPYRIGHT©1994 - 2008 DEERE & COMPANY Moline, Illinois All rights reserved

(4A11) CYLINDER COVER
PORTE DE VISITE DU BATTEUR
DRESCHTROMMELKLAPPE
PORTELLO DEL BATTITORE
TAPA DEL REGISTRO DEL CILINDRO DESGRANADOR
TROSKCYLINDERLUCKA

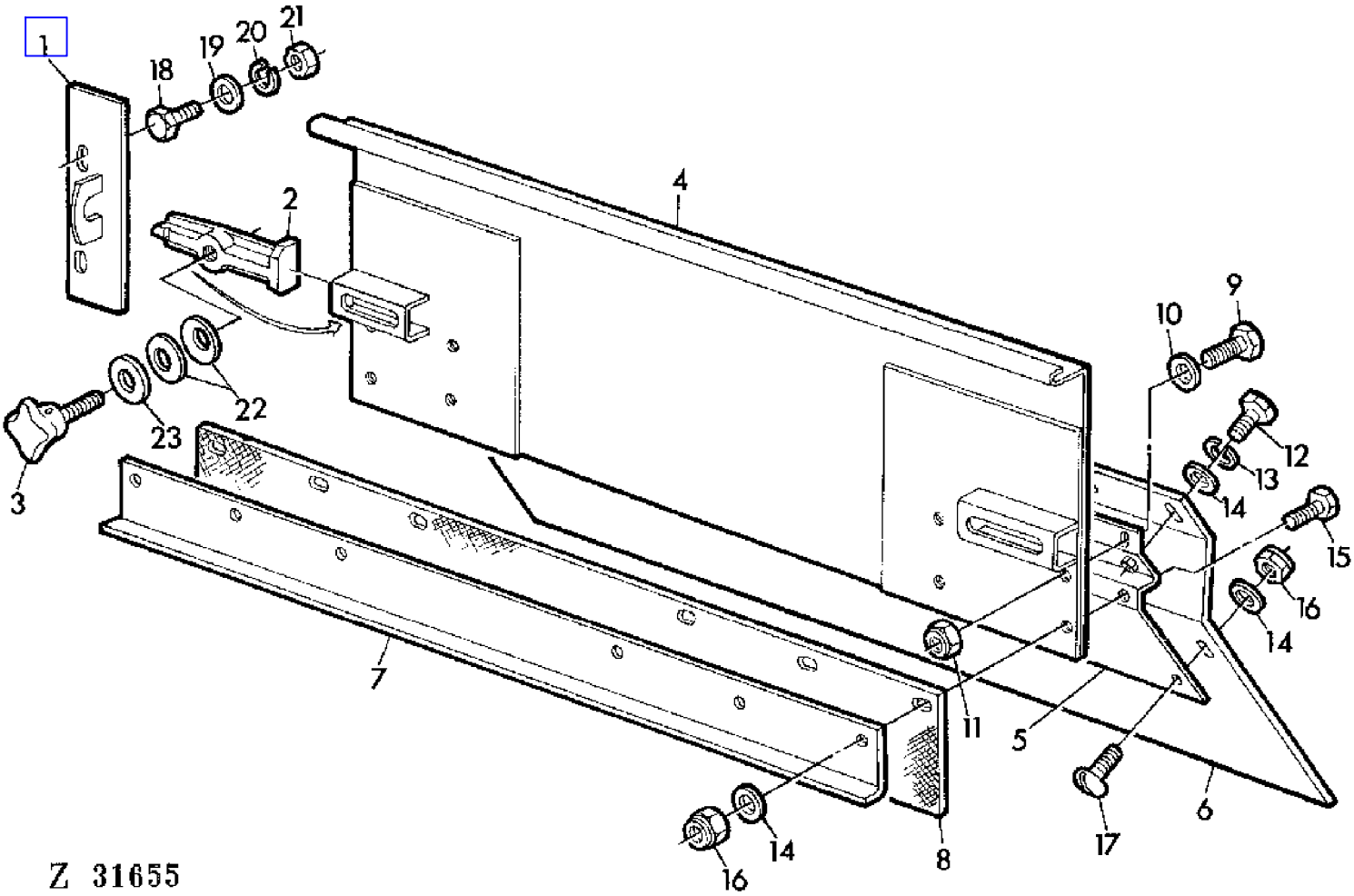

COPYRIGHT©1994 - 2008 DEERE & COMPANY Moline, Illinois All rights reserved

(4A11) CYLINDER COVER
PORTE DE VISITE DU BATTEUR
DRESCHTROMMELKLAPPE
PORTELLO DEL BATTITORE
TAPA DEL REGISTRO DEL CILINDRO DESGRANADOR
TROSKCYLINDERLUCKA

KEY	PART NO.	PART NAME	QTY	SERIAL NO.	975	975HY/4	REMARKS
1	AZ23756	RETAINER	1		X	X	LH
	AZ23757	ADJUSTER	1		X	X	RH
2	Z10681	LATCH	2		X	X	
3	AZ18662	HANDLE	2		X	X	
4	AZ23778	COVER	1		X	X	
5	AZ23761	SHEET	1		X	X	
6	Z34709	SHEET	1		X	X	
7	Z34707	ANGLE	1		X	X	
8	Z30586	GASKET	1		X	X	
9	19M7139	CAP SCREW	AR		X	X	M8 X 20
10	24M7036	WASHER	AR		X	X	9 MM
11	14M7166	LOCK NUT	AR		X	X	M8
12	19M7375	CAP SCREW	AR		X	X	M6 X 18
13	12M7012	LOCK WASHER	AR		X	X	6 MM
14	24M7088	WASHER	AR		X	X	6,6 MM
15	19M7286	CAP SCREW	AR		X	X	M6 X 25
16	14M7165	LOCK NUT	AR		X	X	M6
17	21M7031	SCREW	AR		X	X	M6 X 15
18	19M7167	CAP SCREW	AR		X	X	M10 X 25, LH
	19M7168	CAP SCREW	AR		X	X	M10 X 30, RH
19	24M7040	WASHER	AR		X	X	11 MM
20	12M7013	LOCK WASHER	AR		X	X	10 MM
21	14M7140	NUT	AR		X	X	M10
22	Z22631	DISK SPRING	4		X	X	
23	24M7102	WASHER	2		X	X	14 MM

COPYRIGHT©1994 - 2008 DEERE & COMPANY Moline, Illinois All rights reserved

(1A13) CYLINDER HEAD/ROCKER ARM COVER
CULASSE/CACHE-CULBUTEURS
ZYLINDERKOPF/ZYLINDERKOPFHAUBE
TESTATA/COPERCHIO BILANCIERI
CULATA/TAPA DE BALANCINES
CYLINDERTOPP/VENTILKAPA

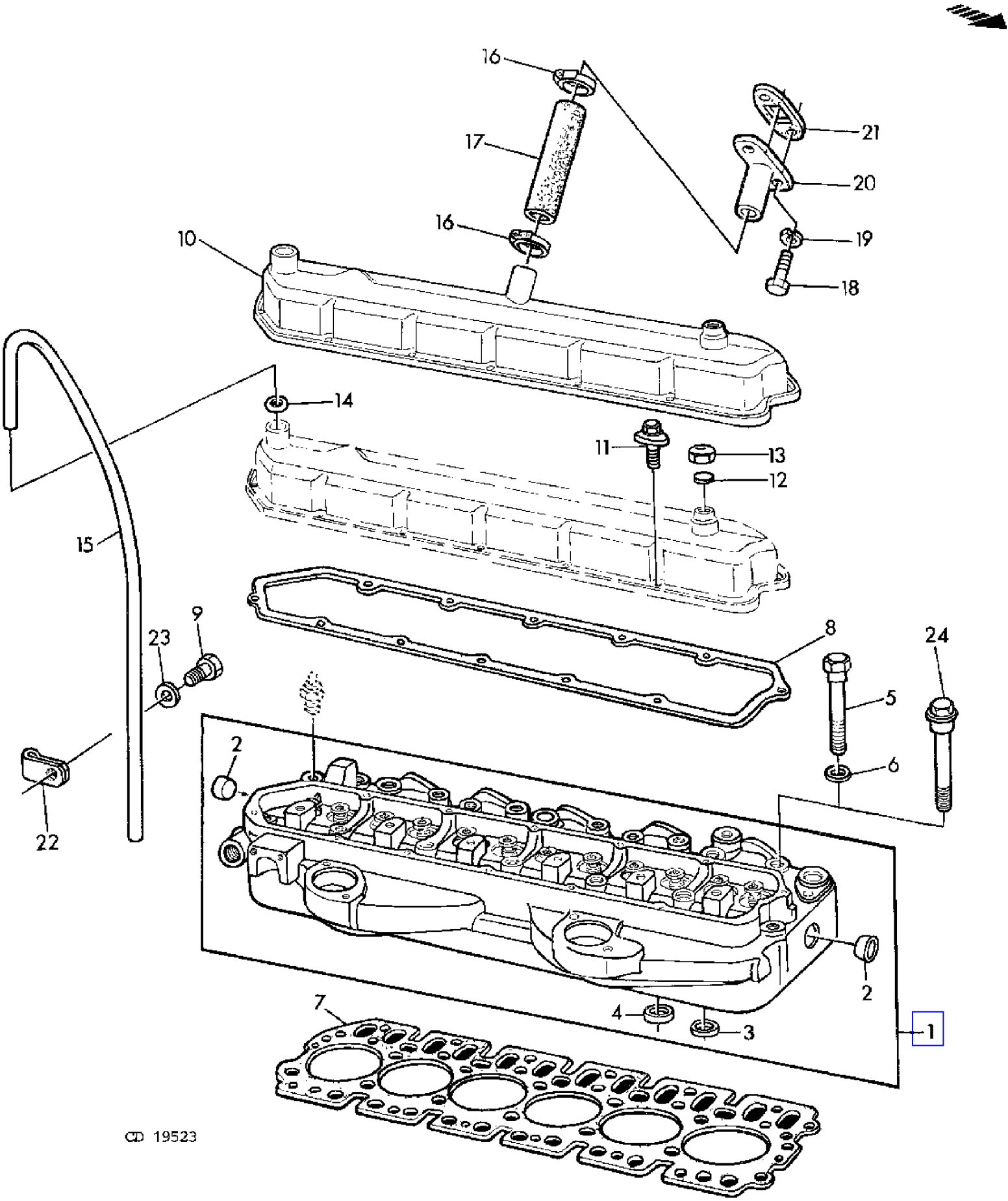

COPYRIGHT©1994 - 2008 DEERE & COMPANY Moline, Illinois All rights reserved

(1A13) CYLINDER HEAD/ROCKER ARM COVER
CULASSE/CACHE-CULBUTEURS
ZYLINDERKOPF/ZYLINDERKOPFHAUBE
TESTATA/COPERCHIO BILANCIERI
CULATA/TAPA DE BALANCINES
CYLINDERTOPP/VENTILKAPA

KEY	PART NO.	PART NAME	QTY	ENGINE SERIAL NO.		975	975HY	REMARKS
1	AR73978	CYLINDER HEAD	1			X	X	ASSY, INCL KEYS 1-4
2	A3910R	CAP	2			X	X	OD = 25,4 MM (1")
	CD16284	CAP	2			X	X	OD = 32,4 MM (1.274")
3	CD13979	VALVE SEAT INSERT	6			X	X	
4	CD14725	VALVE SEAT INSERT	6			X	X	
5	R53223	CAP SCREW	26		- 377809	X	X	12,7 MM X 108 MM (0.5" X 4.25") (FOR AR97275, AR97289, DD13282, RE16818)
	T20182	CAP SCREW	26	377810	-	X	X	12.7 MM X 114 MM (0.5" X 4.5") (FOR RE25571, RE25591) (ORD (26) R85363)
6	T20168	WASHER	26			X	X	(FOR R53223, T20182)
7	R80243	ENGINE CYLINDER HEAD GASKET	1			X	X	(SUB FOR R59449)
8	R75728	GASKET	1			X	X	(ORD W/ (12) AR100124) (SUB FOR R68228, T20467)
9	19H1813	CAP SCREW	1			X	X	5/16" X 5/8"
10	AR55981	COVER	1			X	X	
11	AR100124	SCREW, WITH WASHER	12			X	X	(SUB FOR AR45530)
12	T20328	GASKET	1			X	X	
13	T20294	CAP	1			X	X	
14	R56463	O-RING	1			X	X	(SUB FOR R495R APPL)
15	T20074	TUBE	1			X	X	
16	AR21839	CLAMP	2			X	X	(SUB FOR AR21837, AT18904)
17	.....	HOSE	1			X	X	LGTH = 114 MM (4.49") NSEP (ORD R83064) (SUB FOR R32087, R34603, R79828, T29321)
18	19H2284	CAP SCREW	3			X	X	3/8" X 7/8"
19	12H304	LOCK WASHER	2			X	X	3/8"
20	AR67500	ADAPTER	1			X	X	
21	R43416	GASKET	1			X	X	
22	R40791	CLAMP	1			X	X	
23	24H1685	WASHER	1			X	X	11/32" X 3/4" X .075" (SUB FOR 12H303)
24	R85363	CAP SCREW	26	377810	-	X	X	12,7 MM X 112 MM (0.5" X 4.41")
..	R83064	HOSE	AR			X	X	ID = 19 MM (0.74") LGTH = 2000 MM (78.74")

COPYRIGHT©1994 - 2008 DEERE & COMPANY Moline, Illinois All rights reserved

(1A21) CYLINDERLINER AND PISTON KIT
CHEMISE ET PISTON-JEU DE REPARATION
ZYLINDERBUECHSE UND KOLBEN-REPARATURSATZ
CAMICIA CILINDRO E PISTONE
CAMISAS Y PISTONES-JUEGO DE REPARACION
CYLINDERFODER OCH KOLV/ENHET

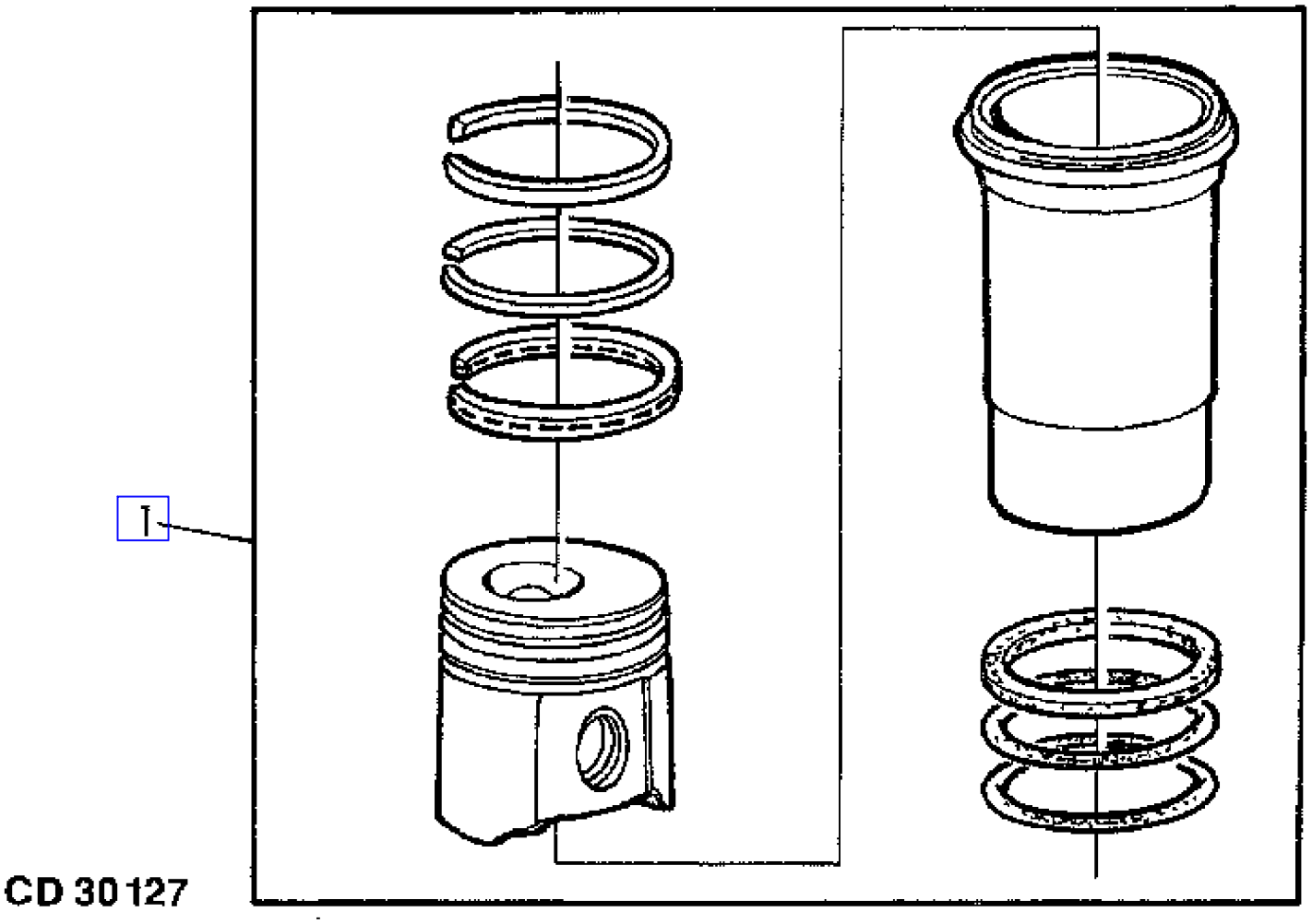

COPYRIGHT©1994 - 2008 DEERE & COMPANY Moline, Illinois All rights reserved

(1A21) CYLINDERLINER AND PISTON KIT
CHEMISE ET PISTON-JEU DE REPARATION
ZYLINDERBUECHSE UND KOLBEN-REPARATURSATZ
CAMICIA CILINDRO E PISTONE
CAMISAS Y PISTONES-JUEGO DE REPARACION
CYLINDERFODER OCH KOLV/ENHET

KEY	PART NO.	PART NAME	QTY	SERIAL NO.	975	975HY/4	REMARKS
1	RE22678	PISTON-LINER KIT	AR		X	X	MARKED "B" (SUB FOR RE15600)
	RE22681	PISTON-LINER KIT	AR		X	X	MARKED "H" (SUB FOR RE15597)
2	RE15674	PISTON RING KIT	1		X	X	
3	R80724	CYLINDER LINER	1		X	X	
4	AR65507	O-RING KIT	1		X	X	

COPYRIGHT©1994 - 2008 DEERE & COMPANY Moline, Illinois All rights reserved

(1E22) DASHBOARD PANEL
PANNEAU DU TABLEAU DE BORD
ARMATURENKASTEN
CRUSCOTTO
TABLERO DE INSTRUMENTOS
INSTRUMENTPANEL

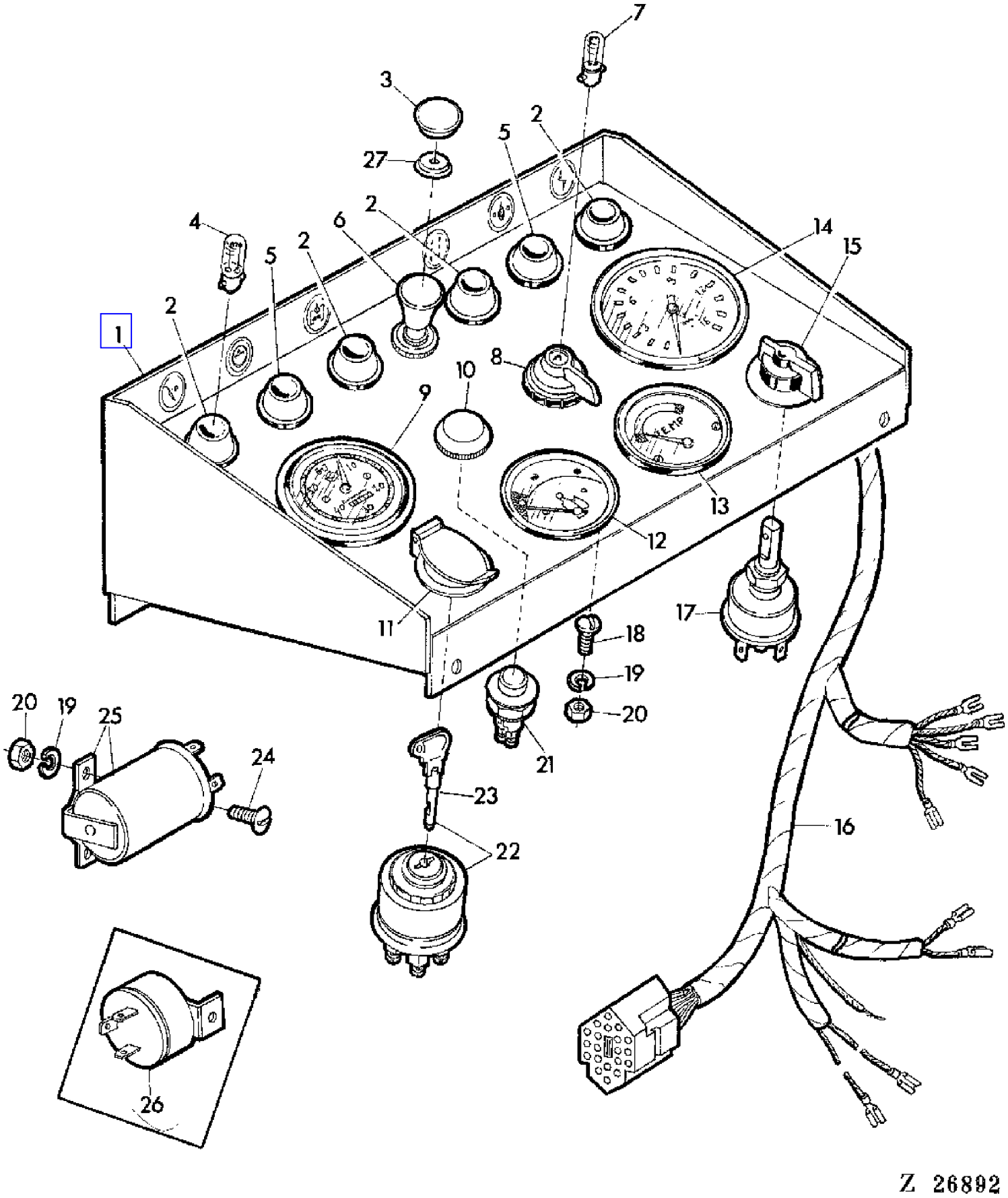

COPYRIGHT©1994 - 2008 DEERE & COMPANY Moline, Illinois All rights reserved

(1E22) DASHBOARD PANEL
PANNEAU DU TABLEAU DE BORD
ARMATURENKASTEN
CRUSCOTTO
TABLERO DE INSTRUMENTOS
INSTRUMENTPANEL

KEY	PART NO.	PART NAME	QTY	SERIAL NO.	975	975HY	REMARKS
1	AZ23048	INSTRUMENT PANEL	1		X	X	
2	AZ19064	INDICATOR LIGHT	AR		X	X	
3	Z30235	COVER	1		X	X	
4	57M6277	BULB	AR		X	X	H 12V 2W
5	AZ19063	INDICATOR LIGHT	AR		X	X	
6	AZ21185	SWITCH	1		X	X	
7	57M6343	BULB	AR		X	X	J 12V 2W
8	Z22806	SWITCH	1		X	X	
9	AZ27640	HOUR METER	1		X	X	(SUB FOR AZ17023)
10	Z25724	CAP	1		X	X	
11	AZ34956	TERMINAL NIPPLE	1		X	X	(SUB FOR Z21984)
12	AL24294	GAUGE	1		X	X	(SUB FOR AL18155)
13	AL24526	TEMPERATURE GAUGE	1		X	X	(SUB FOR AZ23585)
14	AZ23047	TACHOMETER	1		X	X	
15	L30655	KNOB	1		X	X	
16	AZ23592	WIRING HARNESS	1	- 015897	X		
	AZ25914	WIRING HARNESS	1	015898 - 017017	X		
	AZ27003	WIRING HARNESS	1	017018 -	X		
	AZ27004	WIRING HARNESS	1		X		
17	AL25064	SWITCH	1		X	X	
18	21M7142	SCREW	2		X	X	M5 X 25
19	12M7011	LOCK WASHER	AR		X	X	M5
20	14M7028	NUT	AR		X	X	5 MM
21	AZ29697	SWITCH	1		X	X	INCL KEY 10 (SUB FOR AZ14727)
22	AZ21092	SWITCH	1		X	X	
23	Z32296	KEY	1		X	X	
24	21M7140	SCREW	2		X	X	M5 X 10
25	AZ23051	FLASHER	1		X	X	(A)
26	Z21989	FLASHER	1	- 017017	X		(B)
27	Z36001	CAP	1		X	X	

(A) DIRECTION INDICATOR
INDICATEUR DE DIRECTION
FAHRTRICHTUNGSANZEIGER
INDICATORE DI DIREZIONE
INDICADOR DEL SENTIDO DE MARCHA
KORRIKTNINGSVISARE

(B) HANDBRAKE
FREIN A MAIN
HANDBREMSE
FRENO A MANO
FRENO DE MANO
HANDBROMS

COPYRIGHT©1994 - 2008 DEERE & COMPANY Moline, Illinois All rights reserved

(2G18) DECALCOMANIAS
DECALCOMANIES
ABSCHIEBEBILDER
DECALCOMANIE
CALCOMANIAS
DECALER

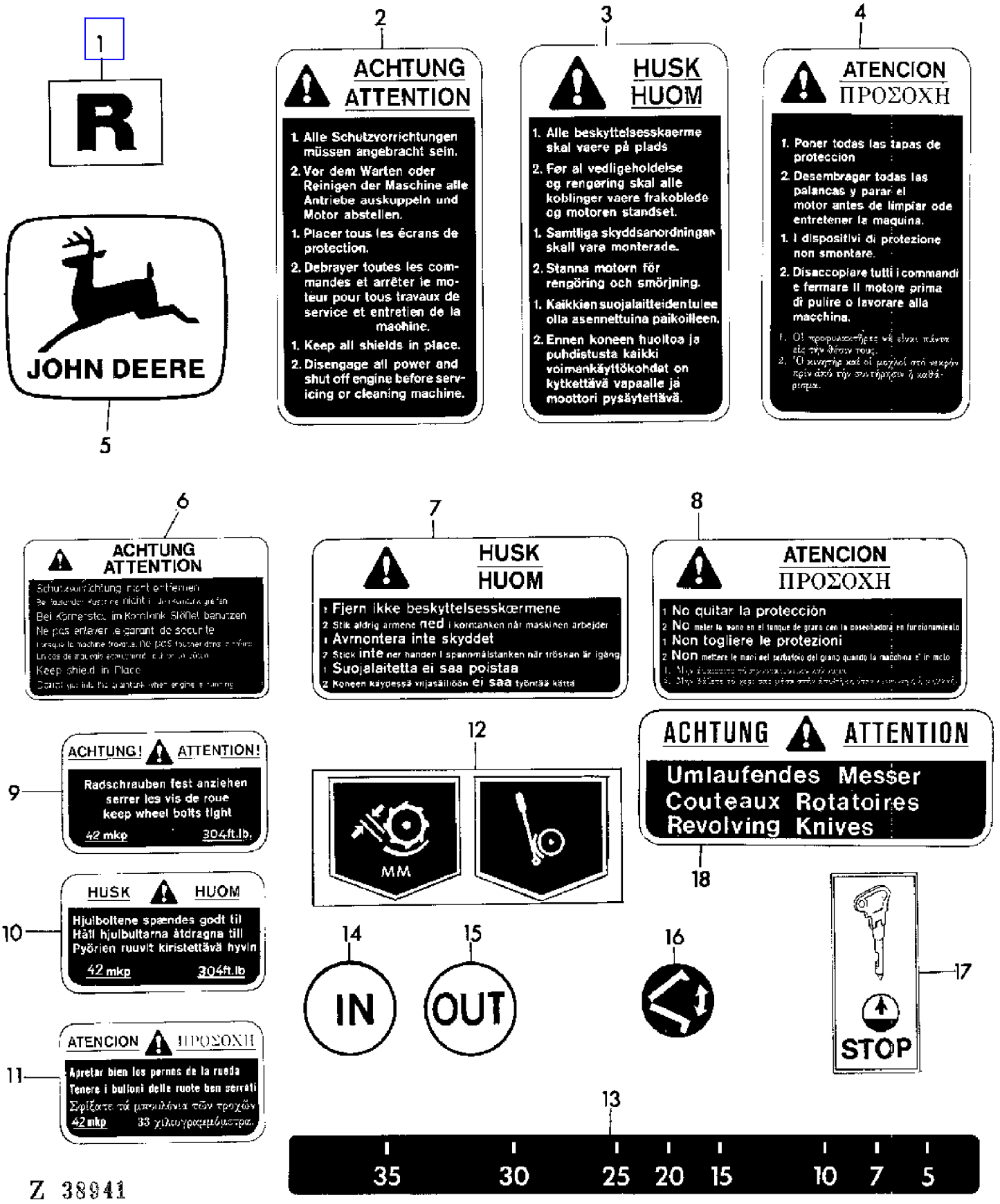

COPYRIGHT©1994 - 2008 DEERE & COMPANY Moline, Illinois All rights reserved

(2G18) DECALCOMANIAS
DECALCOMANIES
ABSCHIEBEBILDER
DECALCOMANIE
CALCOMANIAS
DECALER

KEY	PART NO.	PART NAME	QTY	SERIAL NO.	975	975HY/4	REMARKS
1	Z34814	DECAL	2		X	X	
2	Z31048	DECAL	2		X	X	
3	Z31046	DECAL	2		X	X	
4	Z31045	DECAL	2		X	X	
5	JD5239	DECAL	1		X	X	
	JD5299	DECAL	1		X	X	
6	Z42137	DECAL	1		X	X	(SUB FOR Z33714)
7	Z31970	DECAL	1		X	X	
8	Z31971	DECAL	1		X	X	
9	Z34656	DECAL	2		X	X	
10	Z34655	DECAL	2		X	X	
11	Z34654	DECAL	2		X	X	
12	Z30758	DECAL	1		X	X	
13	Z39150	DECAL	1		X	X	(SUB FOR Z22161)
14	Z32500	DECAL	2		X	X	
15	Z32501	DECAL	2		X	X	
16	Z32178	DECAL	1		X	X	
17	Z35713	DECAL	1		X	X	
18	Z35516	DECAL	1		X	X	

COPYRIGHT©1994 - 2008 DEERE & COMPANY Moline, Illinois All rights reserved

(2G20) DECALCOMANIAS
DECALCOMANIES
ABSCHIEBEBILDER
DECALCOMARIE
CALCOMANIAS
DECALER

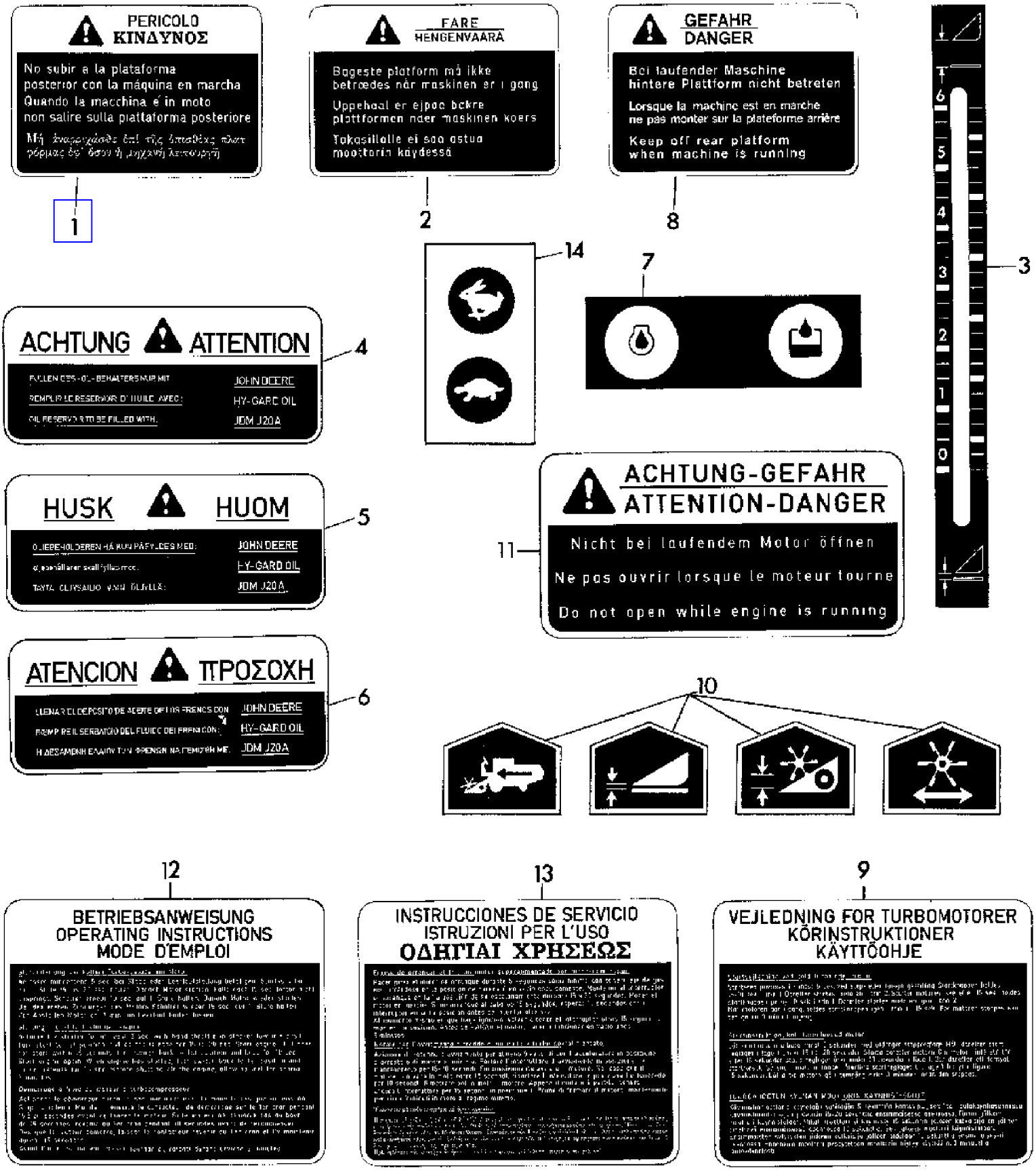

Z 101699

COPYRIGHT©1994 - 2008 DEERE & COMPANY Moline, Illinois All rights reserved

(2G20) DECALCOMANIAS
DECALCOMANIES
ABSCHIEBEBILDER
DECALCOMARIE
CALCOMANIAS
DECALER

KEY	PART NO.	PART NAME	QTY	SERIAL NO.	975	975HY/4	REMARKS
1	Z34858	DECAL	1		X	X	
2	Z34857	DECAL	1		X	X	
3	Z30011	DECAL	1		X	X	
4	Z39053	DECAL	1		X	X	
5	Z39055	DECAL	1		X	X	
6	Z39054	DECAL	1		X	X	
7	Z34722	DECAL	1		X	X	
8	Z34856	DECAL	1		X	X	
9	Z34765	DECAL	1		X	X	
10	Z34810	DECAL	1		X	X	
11	Z35150	DECAL	1		X	X	
12	Z34763	DECAL	1		X	X	
13	Z34764	DECAL	1		X	X	
14	Z34811	DECAL	1		X		

COPYRIGHT©1994 - 2008 DEERE & COMPANY Moline, Illinois All rights reserved

(2G22) DECALCOMANIAS
DECALCOMANIES
ABSCHIEBEBILDER
DECALCOMANIE
CALCOMANIAS
DECALER

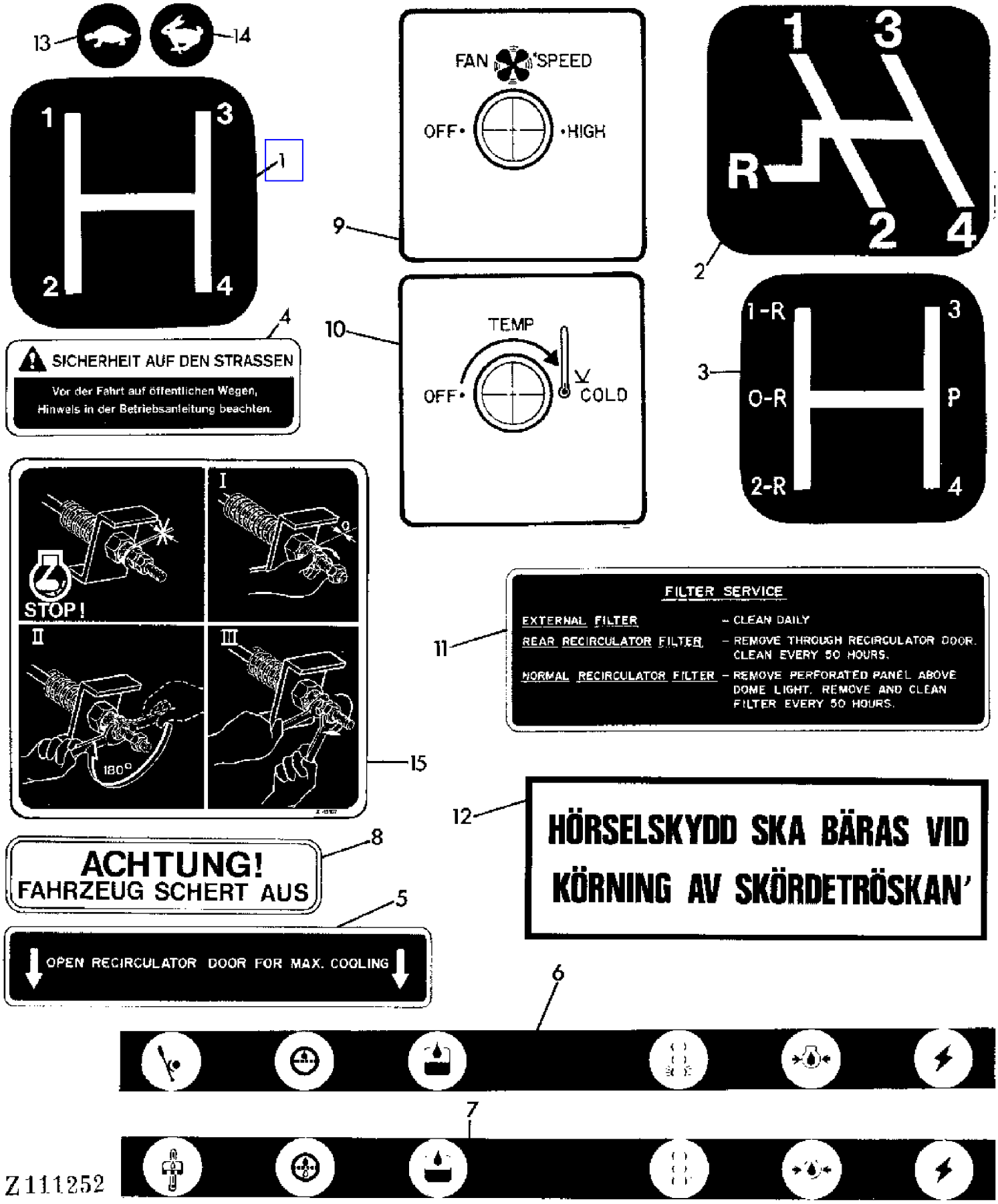

COPYRIGHT©1994 - 2008 DEERE & COMPANY Moline, Illinois All rights reserved

(2G22) DECALCOMANIAS
DECALCOMANIES
ABSCHIEBEBILDER
DECALCOMANIE
CALCOMANIAS
DECALER

KEY	PART NO.	PART NAME	QTY	SERIAL NO.	975	975HY/4	REMARKS
1	Z38334	DECAL	1			X	
2	Z30696	DECAL	1	- 018097	X		
	Z38529	DECAL	1	018098 -	X		
3	Z30708	DECAL	1		X		
4	Z36103	DECAL	1		X	X	
5	H84116	DECAL	1		X	X	
6	Z34507	DECAL	1		X		
7	Z38013	DECAL	1			X	
8	Z36357	DECAL	1		X	X	
9	H87458	DECAL	1		X	X	
10	H87457	DECAL	1		X	X	
11	H84117	DECAL	1		X	X	
12	Z38273	DECAL	1		X	X	
13	Z22159	DECAL	1		X	X	
14	Z22160	DECAL	1		X	X	
15	Z42167	DECAL	1			X	

COPYRIGHT©1994 - 2008 DEERE & COMPANY Moline, Illinois All rights reserved

(2G24) DECALCOMANIAS
DECALCOMANIES
ABSCHIEBEBILDER
DECALCOMANIE
CALCOMANIAS
DECALER

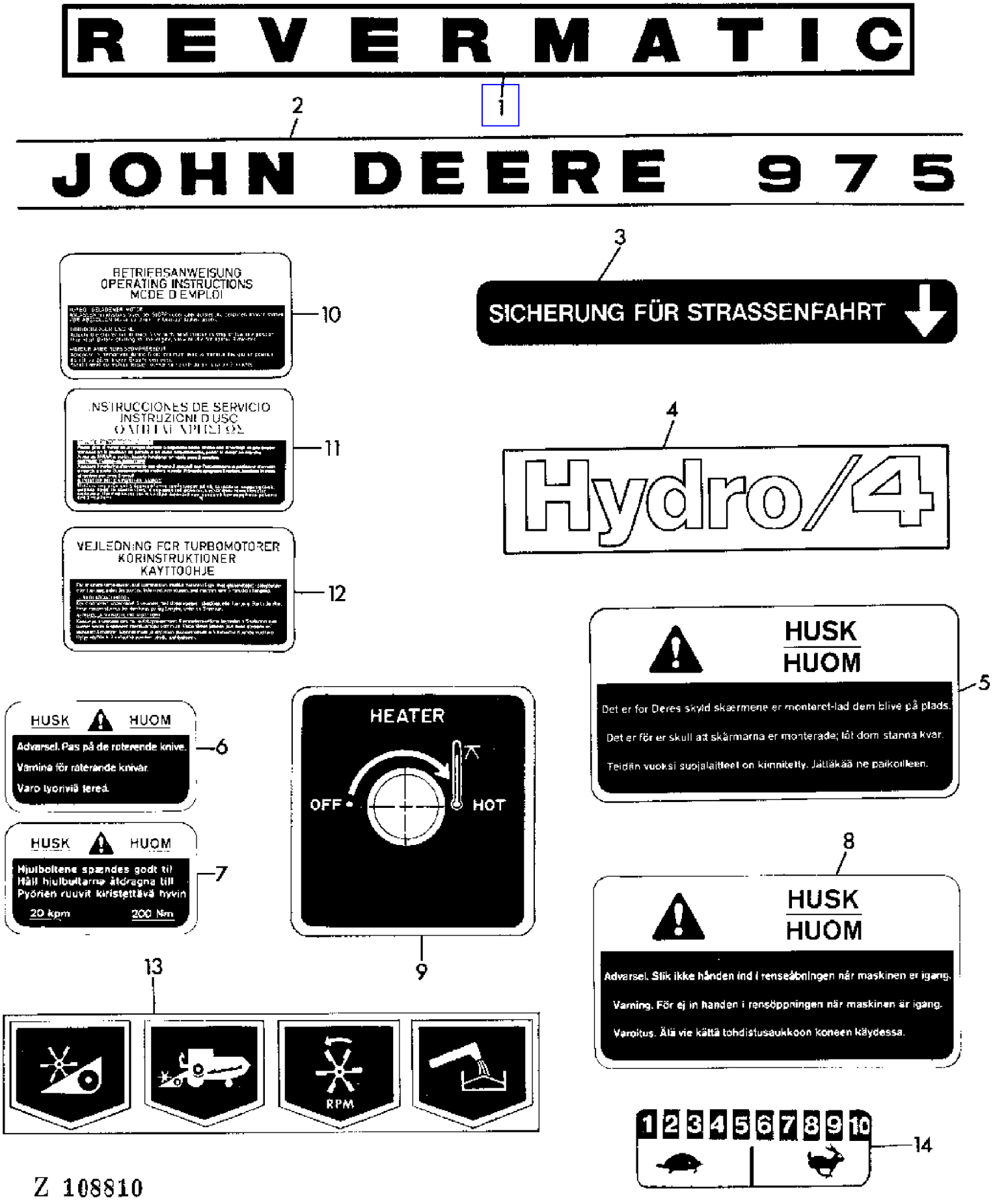

COPYRIGHT©1994 - 2008 DEERE & COMPANY Moline, Illinois All rights reserved

(2G24) DECALCOMANIAS
DECALCOMANIES
ABSCHIEBEBILDER
DECALCOMANIE
CALCOMANIAS
DECALER

KEY	PART NO.	PART NAME	QTY	SERIAL NO.	975	975HY/4	REMARKS
1	Z34423	DECAL	1		X		
2	Z34816	DECAL	2		X	X	
3	Z38617	DECAL	1		X	X	
4	Z39046	DECAL	1			X	
5	Z33123	DECAL	1		X	X	
6	Z33120	DECAL	1		X	X	
7	Z33121	DECAL	1		X	X	
8	Z33119	DECAL	1		X	X	
9	H84175	LABEL	1		X	X	AR
10	Z34229	DECAL	1		X	X	
11	Z34230	DECAL	1		X	X	
12	Z34231	DECAL	1		X	X	
13	Z22163	DECAL	1		X	X	
14	Z43493	DECAL	1		X	X	

COPYRIGHT©1994 - 2008 DEERE & COMPANY Moline, Illinois All rights reserved

(2H02) DECALCOMANIAS
DECALCOMANIES
ABSCHIEBEBILDER
DECALCOMANIE
CALCOMANIAS
DEKALER

1

ACHTUNG
ATTENTION

1 Maschine starten in „P"
2 Schalte nicht bei rot
3 Richtungswechsel nur im 1. und 2. Gang
1 Demarrer le moteur en position „P"
2 Ne pas changer les vitesses au feu rouge
3 Changement en marche arrière seulement en1ére et 2 ème vitesse
1 Start engine in position „P"
2 Never shift gears with red light on
3 Reversing only in 1st and 2nd gear

2

HUSK
HUOM

1 Start Maskinen i "P"
2 Skift aldrig gear med det røde lys tændt
3 Bak kun i 1. og 2. gear
1 Starta motorn i läge "P"
2 Växla aldrig när röd lampa lyser
3 Backa endast i Första och andra växeln
1 Kone käynnistettävä P- asennossa
2 Älä vaihda punaisella
3 Suunnanmuutos vain 1 - ja 2 vaihteella

3

ATENCION
ΠΡΟΣΟΧΗ

1 Arrancar el motor con la palanca en „P"
2 No cambiar de velocidad cuando esté encendida la luz roja
3 No hacer la inversión de marcha más que en primera y segunda velocidades
1 Avviare la macchina In posizione „P"
2 Non cambiare marcia quando la spia rossa e'accesa
3 Cambiare in retromarcia solo dalla 1a e 2a marcia
1. Ἐκκίνησις τῆς μηχανῆς στή θέσιν "P".
2. Μήν ἀλλάζετε ταχύτητα ὅταν ἀνάβη τό κόκκινο φῶς.
3. Ἀλλαγή ὀπισθεν μόνον μέ 1 η καί 2 α ταχύτητα.

4

Straßenfahrt
Transport sur route
Road travelling
1·2·R 3·4

5

Marcha por carretera
Spostamento su strada
Ταχύτητες πορείας
1·2·R 3·4

6

Kørsel på Vej
Vägtransport
Maantieajo
1·2·R 3·4

Z111211

COPYRIGHT©1994 - 2008 DEERE & COMPANY Moline, Illinois All rights reserved

(2H02) DECALCOMANIAS
DECALCOMANIES
ABSCHIEBEBILDER
DECALCOMANIE
CALCOMANIAS
DEKALER

KEY	PART NO.	PART NAME	QTY	SERIAL NO.	975	975HY/4	REMARKS
1	Z31952	DECAL	1		X		
2	Z31966	DECAL	1		X		
3	Z31967	DECAL	1		X		
4	Z31951	DECAL	1		X		
5	Z31965	DECAL	1		X		
6	Z31964	DECAL	1		X		

COPYRIGHT©1994 - 2008 DEERE & COMPANY Moline, Illinois All rights reserved

(2H04) DECALCOMANIAS
DECALCOMANIES
ABSCHIEBEBILDER
DECALCOMANIE
CALCOMANIAS
DECALER

1

ATTENZIONE

NORME DI SICUREZZA

MOLTI INCIDENTI SI POSSONO EVITARE! LE MIETITREBBIE SONO MACCHINE MOLTO COMPLESSE E COLORO CHE VI SONO ADDETTI O CHE PER QUALSIASI MOTIVO SI AVVICINANO AD ESSE DEVONO OSSERVARE SCRUPOLOSAMENTE QUESTE ELEMENTARI NORME DI PRUDENZA.

- CON LA MACCHINA IN FUNZIONE, SULLA PIATTAFORMA DI GUIDA DEVE STARE SOLO L'OPERATORE.
- NON LASCIARE MAI LA MACCHINA INCUSTODITA CON ORGANI IN MOVIMENTO.
- PRIMA DI AVVIARE IL MOTORE ACCERTARSI CHE IL CAMBIO SIA IN FOLLE - SUONARE SEMPRE L'AVVISATORE ACUSTICO PRIMA DI AVANZARE CON LA MIETITREBBIA, AFFINCHE' TUTTI SI ALLONTANINO DALLA MACCHINA.
- NON AFFRONTARE MAI LE DISCESE CON CAMBIO IN FOLLE.
- PRIMA DI ABBANDONARE IL POSTO DI GUIDA NON DIMENTICARE DI BLOCCARE IL FRENO A MANO, SPEGNERE IL MOTORE E INSERIRE UNA MARCIA.
- NON ESEGUIRE MAI OPERAZIONI DI LUBRIFICAZIONE, MANUTENZIONE, PULIZIA E REGOLAZIONE CON ORGANI O MOTORE IN MOVIMENTO.

  LASCIARE TUTTE LE PROTEZIONI DI SICUREZZA AL LORO POSTO QUANDO LA MACCHINA E' IN FUNZIONE.
- NON AVVICINARSI MAI ALLA MACCHINA CON INDUMENTI LARGHI O SVOLAZZANTI.
- SOSTITUIRE LE CINGHIE LOGORE O SFILACCIATE PRIMA CHE SI SPEZZINO.
- NON INTRODURSI SOTTO LA PIATTAFORMA DI TAGLIO SENZA AVERE PRIMA INSERITO GLI APPOSITI FERMI DI SICUREZZA SUI MARTINETTI DI SOLLEVAMENTO.
- IN CASO DI BLOCCAGGIO DI QUALCHE ORGANO, LIBERARLO SOLO A TRASMISSIONE DISINNESTATA E MOTORE FERMO.

  NON SPINGERE MAI IL PRODOTTO CON LE MANI O CON I PIEDI NEGLI APPARATI DI RACCOLTA E CONVOGLIAMENTO (COCLEE, CATENE); TALE OPERAZIONE DEVE ESSERE EFFETTUATA SOLTANTO A MOTORE SPENTO E CON ORGANI COMPLETAMENTE FERMI.
- MANTENERE IL MOTORE PULITO PERCHE' LA POLVERE, IL GASOLIO E I FRAMMENTI DI PAGLIA CHE SI ACCUMULANO SONO TUTTI FACILMENTE INFIAMMABILI.
- NON FUMARE OD USARE FIAMME LIBERE DURANTE IL RIFORNIMENTO DI CARBURANTE.
- RABBOCCARE IL RADIATORE SOLO A MOTORE FERMO; ATTENDERE QUALCHE MINUTO PRIMA DI ALLENTARE IL TAPPO.
- PRIMA DI OGNI TRASFERIMENTO SU STRADA VERIFICARE L'EFFICIENZA DEI DISPOSITIVI DI ILLUMINAZIONE E SEGNALAZIONE.

2

ATTENZIONE

IN CASO DI BLOCCO DI UNO DEGLI ORGANI DELLA PIATTAFORMA DI RACCOLTA, L'OPERATORE DEVE PROVVEDERE A DISINDSERIRE OD INVERTIRE IL MOVIMENTO DEI MEDESIMI ORGANI. DEVE INOLTRE PROVVEDERE, PRIMA DI FERMARE IL MOTORE, A PORTARE LA MACCHINA IN POSIZIONE PIANA.

3

ACHTUNG ATTENTION

4

ATENCION ΠΡΟΣΟΧΗ
ATTENZIONE

5

HUSK VARNING
HUOM

6

Z 109497

COPYRIGHT©1994 - 2008 DEERE & COMPANY Moline, Illinois All rights reserved

(2H04) DECALCOMANIAS
DECALCOMANIES
ABSCHIEBEBILDER
DECALCOMANIE
CALCOMANIAS
DECALER

KEY	PART NO.	PART NAME	QTY	SERIAL NO.	975	975HY/4	REMARKS
1	Z41069	DECAL	2		X	X	
2	Z41070	DECAL	1		X	X	
3	Z41066	DECAL	2		X	X	
4	Z41067	DECAL	2		X	X	
5	Z41068	DECAL	2		X	X	
6	Z46439	LABEL	AR		X	X	

COPYRIGHT©1994 - 2008 DEERE & COMPANY Moline, Illinois All rights reserved

(1I17) DIFFERENTIAL
DIFFERENTIEL
DIFFERENTIAL
DIFFERENZIALE
DIFERENCIAL
DIFFERENTIAL

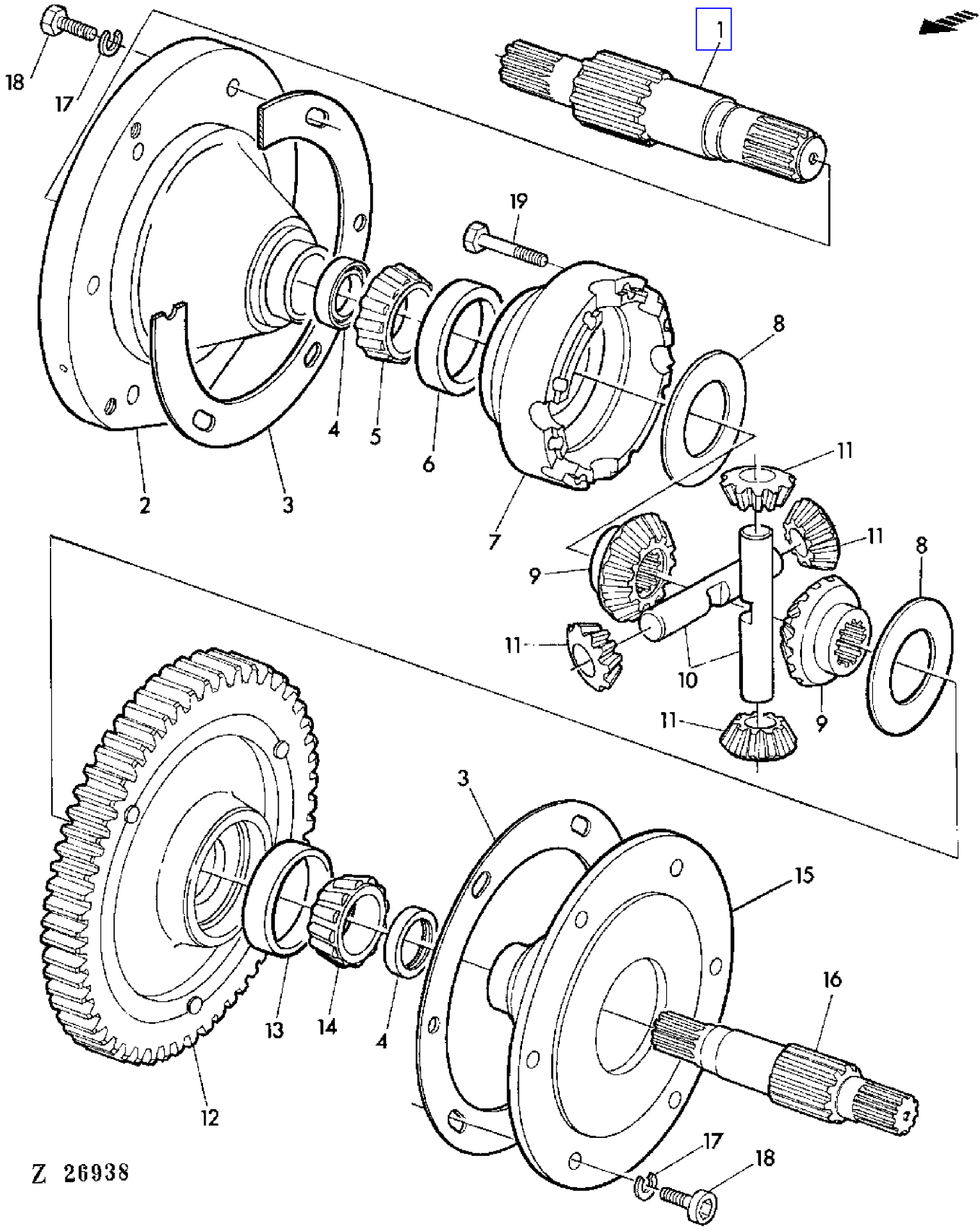

COPYRIGHT©1994 - 2008 DEERE & COMPANY Moline, Illinois All rights reserved

(1I17) DIFFERENTIAL
DIFFERENTIEL
DIFFERENTIAL
DIFFERENZIALE
DIFERENCIAL
DIFFERENTIAL

KEY	PART NO.	PART NAME	QTY	SERIAL NO.	975	975HY/4	REMARKS
1	Z35515	SHAFT	1	- 016667	X		RH
	Z37946	SHAFT	1	016668 -	X	X	RH
2	Z10547	HOUSING	1		X	X	RH
3	P49128	SHIM	AR		X	X	0.002" (0,05 MM)
	P48658	SHIM	AR		X	X	0.003" (0,08 MM)
	P49129	SHIM	AR		X	X	0.005" (0,13 MM)
	P49130	SHIM	AR		X	X	0.010" (0,25 MM)
	P49131	SHIM	AR		X	X	0.020" (0,50 MM)
4	AZ16786	SEAL	2		X	X	
5	JD8171	BEARING CONE	1		X	X	
6	JD8217	BEARING CUP	1		X	X	
7	Z10964	HOUSING	1		X	X	
8	Z34489	WASHER	2		X	X	
9	T29394	BEVEL GEAR	2		X	X	
10	L29226	SHAFT	2		X	X	
11	L29227	GEAR	4		X	X	
12	AZ23520	HOUSING	1		X	X	
13	JD7425	BEARING CUP	1		X	X	
14	JD8161	BEARING CONE	1		X	X	(SUB FOR JD8147)
15	Z10548	HOUSING	1		X	X	LH
16	Z35514	SHAFT	1	- 016667	X		LH
	Z37945	SHAFT	1	016668 -	X	X	LH
17	12H301	LOCK WASHER	6		X		1/2"
	12M7073	LOCK WASHER	AR		X	X	1/2"
18	19H1721	CAP SCREW	6		X		1/2" X 1-1/2"
	19H2936	SCREW	AR		X	X	1/2" X 1-1/2"
19	T21430	CAP SCREW	8		X	X	

COPYRIGHT©1994 - 2008 DEERE & COMPANY Moline, Illinois All rights reserved

(2A19) DISK BRAKES-FOOT BRAKE
FREINS A DISQUE-FREIN A PIED
SCHEIBENBREMSEN-FUSSBREMSE
FRENI A DISCO-FRENI A PEDALE
FRENOS DE DISCO-FRENOS DE PIE
SKIVBROMSAR-FOTBROMS

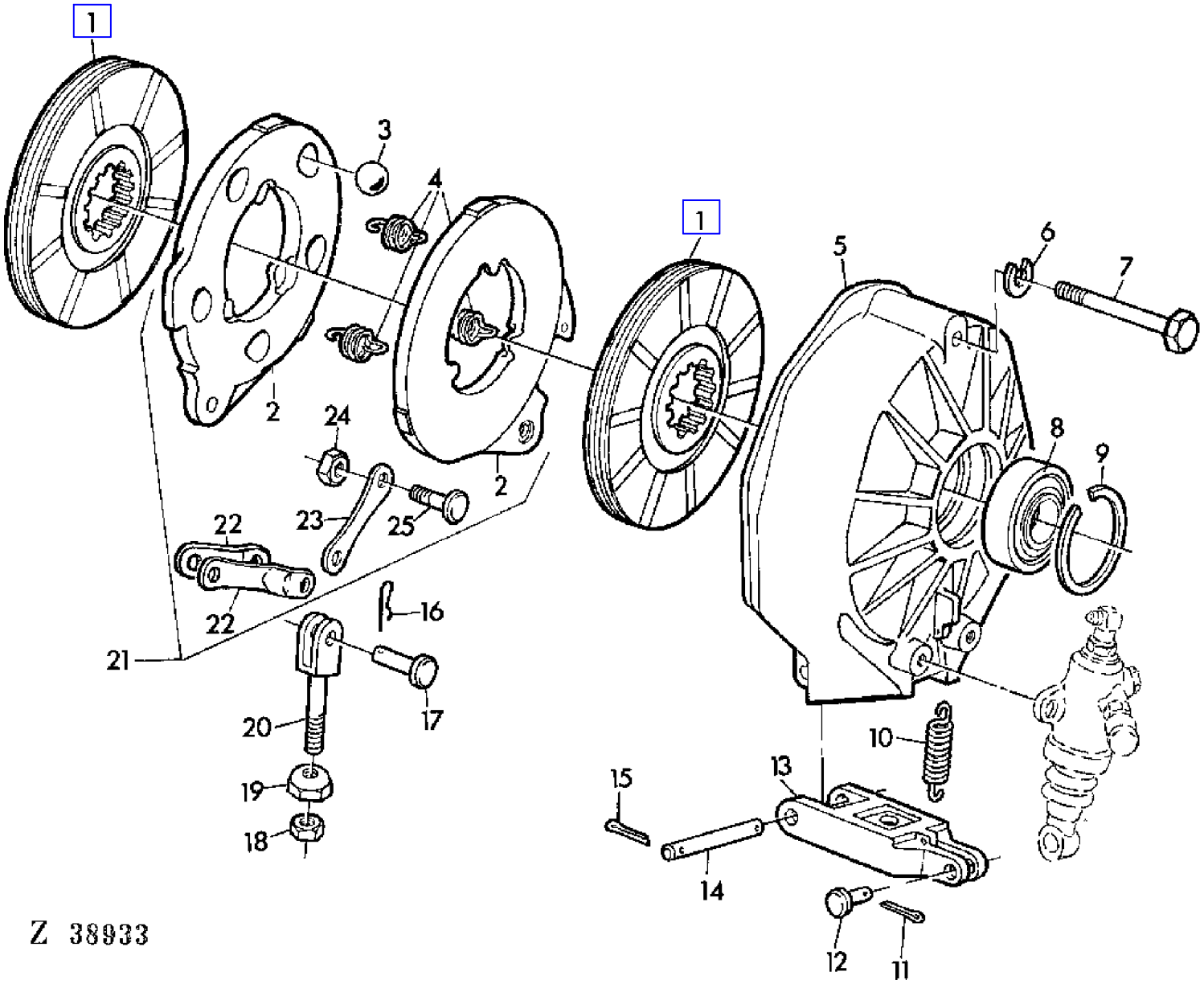

COPYRIGHT©1994 - 2008 DEERE & COMPANY Moline, Illinois All rights reserved

(2A19) DISK BRAKES-FOOT BRAKE
FREINS A DISQUE-FREIN A PIED
SCHEIBENBREMSEN-FUSSBREMSE
FRENI A DISCO-FRENI A PEDALE
FRENOS DE DISCO-FRENOS DE PIE
SKIVBROMSAR-FOTBROMS

KEY	PART NO.	PART NAME	QTY	SERIAL NO.		975	975HY/4	REMARKS
1	AZ20844	BRAKE DISK	4			X	X	
2	Z10811	BRAKE ACTUATING DISK	4		- 021050	X		
	AZ28122	BRAKE ACTUATING DISK	4	021051	-	X	X	
3	M830T	BALL	10			X	X	7/8"
4	Z32069	SPRING	6			X	X	(SUB FOR Z34724)
5	Z10699	HOUSING	2		- 016667	X		
	Z11172	HOUSING	2	016668	-	X	X	
6	12H301	LOCK WASHER	6			X	X	1/2"
7	19H1739	CAP SCREW	6			X	X	1/2" X 4-1/2"
8	JD9301	BALL BEARING	2		- 016667	X		
	JD10087	BALL BEARING	2	016668	-	X	X	(SUB FOR JD8524)
9	P46407	SNAP RING	2		- 016667	X		
	40M1871	SNAP RING	2	016668	-	X	X	
10	Z30214	SPRING	2		- 021050	X		(ORD (2) Z38812)
	Z38812	EXTENSION SPRING	2	021051	-	X	X	
11	11M7011	COTTER PIN	2			X	X	3 X 15 MM
12	45M6299	PIN	2			X	X	10 X 50 X 42 MM
13	Z10698	LEVER	2			X	X	
14	N120232	PIN	2			X	X	
15	11H211	COTTER PIN	4			X	X	1/8" X 3/4"
16	J16931	SPRING LOCKING PIN	2			X	X	
17	L364T	PIN	2			X	X	7/16" X 1-15/16"
18	14H934	NUT	2			X	X	7/16"
19	H33513	NUT	2			X	X	
20	P48669	YOKE	2			X	X	
21	AZ20843	BRAKE ACTUATING DISK	2		- 021050	X		ASSY, INCL KEYS 2-4,22-25
	AZ28123	BRAKE ACTUATING DISK	2	021051	-	X	X	ASSY, INCL KEYS 2-4,22-25
22	Z32070	LEVER	4			X	X	
23	Z32071	LEVER	2			X	X	
24	14H774	NUT	4			X	X	3/8"
25	Z32072	BOLT	4			X	X	

COPYRIGHT©1994 - 2008 DEERE & COMPANY Moline, Illinois All rights reserved

(2A21) DISK BRAKES-HANDBRAKE
FREIN A DISQUE-FREIN A MAIN
SCHEIBENBREMSE-HANDBREMSE
FRENI A DISCO-FRENO A MANO
FRENO DE DISCO-FRENO DE MANO
SKIVBROMS-HANDBROMS

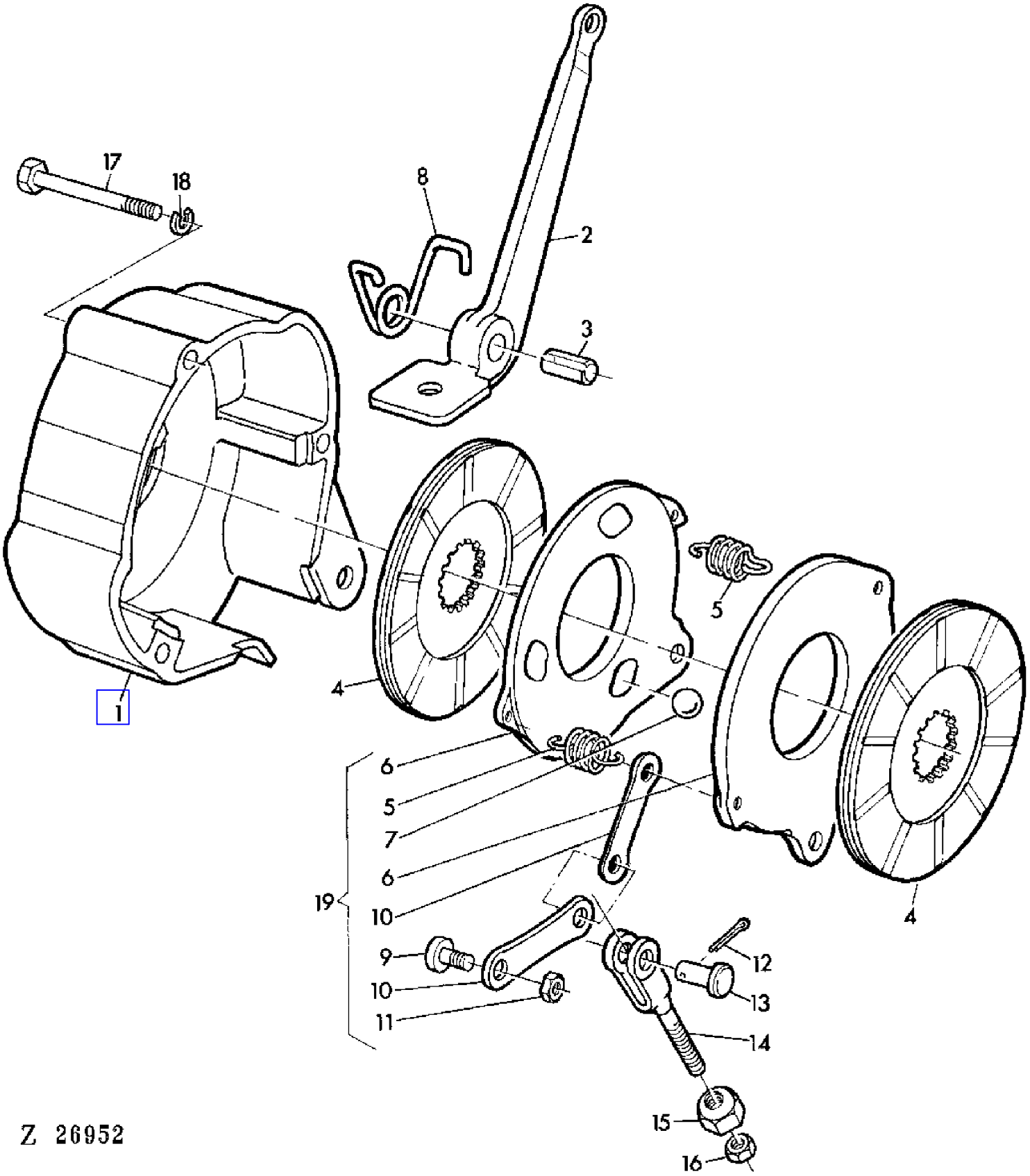

COPYRIGHT©1994 - 2008 DEERE & COMPANY Moline, Illinois All rights reserved

(2A21) DISK BRAKES-HANDBRAKE
FREIN A DISQUE-FREIN A MAIN
SCHEIBENBREMSE-HANDBREMSE
FRENI A DISCO-FRENO A MANO
FRENO DE DISCO-FRENO DE MANO
SKIVBROMS-HANDBROMS

KEY	PART NO.	PART NAME	QTY	SERIAL NO.	975	975HY/4	REMARKS
1	H11492	HOUSING	1		X	X	
2	H11493	LEVER	1		X	X	
3	34H375	SPRING PIN	1		X	X	1/2" X 3"
4	AZ28508	BRAKE DISK	2		X	X	(SUB FOR AH21835)
5	M831T	SPRING	2		X	X	
6	M3332T	DISK	2		X	X	
7	M830T	BALL	4		X	X	7/8"
8	Z37714	SPRING	1		X	X	(SUB FOR Z25992)
9	M834T	STUD	2		X	X	
10	M833T	LEVER	2		X	X	
11	14H463	NUT	2		X	X	5/16"
12	11H206	COTTER PIN	1		X	X	3/32" X 1"
13	P48769	PIN	1		X	X	
14	T19037	YOKE	1		X	X	
15	H62385	NUT	2		X	X	
16	14H774	NUT	1		X	X	3/8"
17	19H2228	CAP SCREW	3		X	X	3/8" X 4"
18	12H304	LOCK WASHER	3		X	X	3/8"
19	AM3098T	DISK	1		X	X	ASSY, INCL KEYS 5-11

COPYRIGHT©1994 - 2008 DEERE & COMPANY Moline, Illinois All rights reserved

(3B23) DOOR LOCK-OPERATOR'S CAB
SERRURE DE CABINE
TUERSCHLOSS-FAHRERKABINE
SERRATURA DELLO SPORTELLO DELLA CABINA
CERRADURA DE LA PUERTA DE CABINA
DORRLAS FOR FORARHYTT

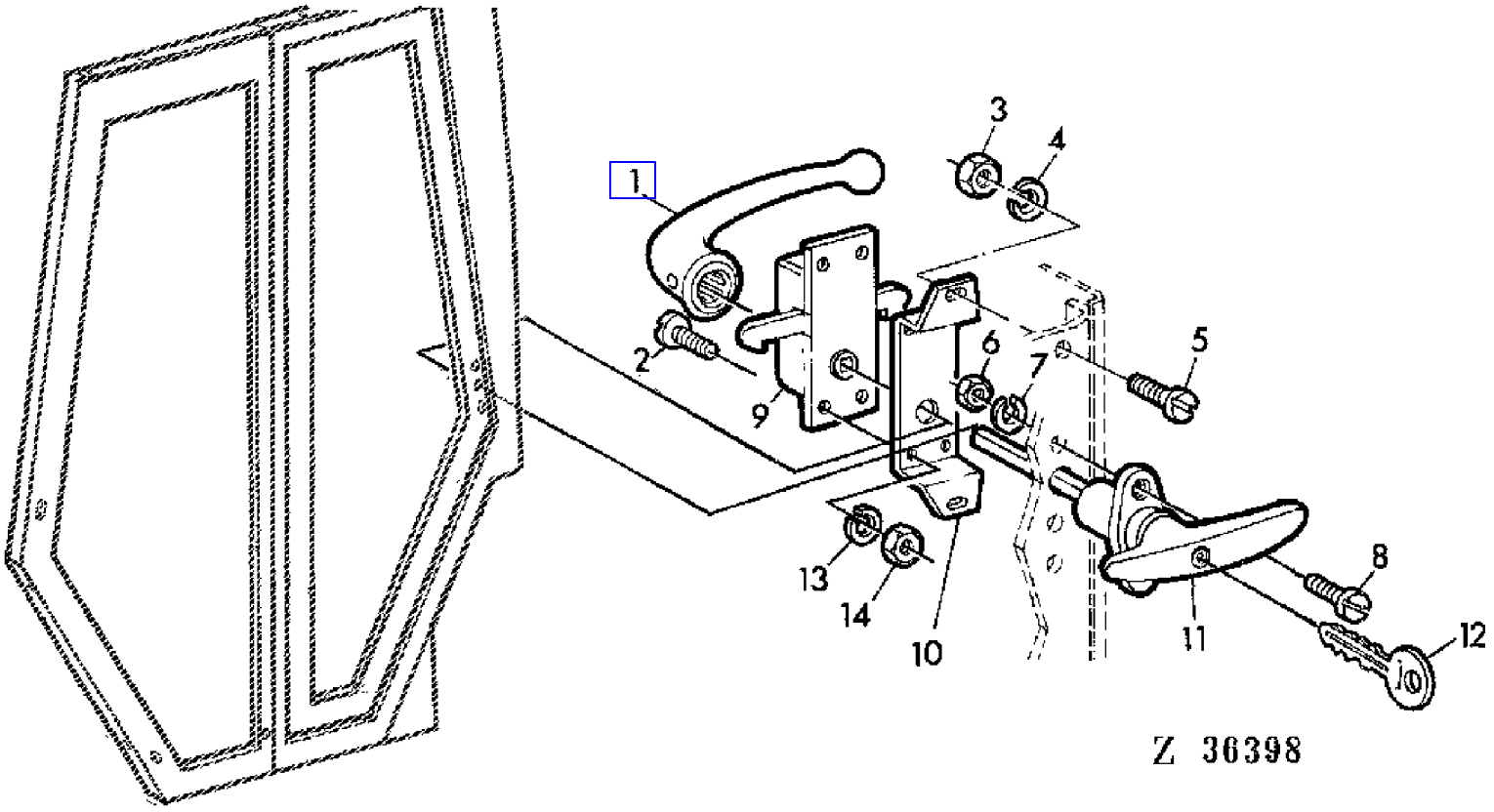

COPYRIGHT©1994 - 2008 DEERE & COMPANY Moline, Illinois All rights reserved

(3B23) DOOR LOCK-OPERATOR'S CAB
SERRURE DE CABINE
TUERSCHLOSS-FAHRERKABINE
SERRATURA DELLO SPORTELLO DELLA CABINA
CERRADURA DE LA PUERTA DE CABINA
DORRLAS FOR FORARHYTT

KEY	PART NO.	PART NAME	QTY	SERIAL NO.	975	975HY/4	REMARKS
1	DA19436	GRIP	1		X	X	
2	21M7031	SCREW	4		X	X	M6 X 15
3	14M7029	NUT	4		X	X	M8
4	12M7008	LOCK WASHER	2		X	X	8 MM
5	19M7295	CAP SCREW	2		X	X	M8 X 45
6	14M7028	NUT	2		X	X	M5
7	12M7011	LOCK WASHER	2		X	X	5 MM
8	21M7223	BOLT	4		X	X	M5 X 45
9	DA19434	LOCK	1		X	X	
10	CA19433	SUPPORT	1		X	X	
11	DA19435	GRIP	1		X	X	INCL KEY 12
12	.....	KEY	2		X	X	NSEP (ORD DA19435)
13	12M7012	LOCK WASHER	4		X	X	6 MM
14	14M7027	NUT	4		X	X	M6

COPYRIGHT©1994 - 2008 DEERE & COMPANY Moline, Illinois All rights reserved

(2H12) DRIVE BELTS
COURROIES D'ENTRAINEMENT
ANTRIEBSRIEMENPLAN
CINGHIE DI COMANDO
CORREAS DE ACCIONAMIENTO
DRIVREMMAR

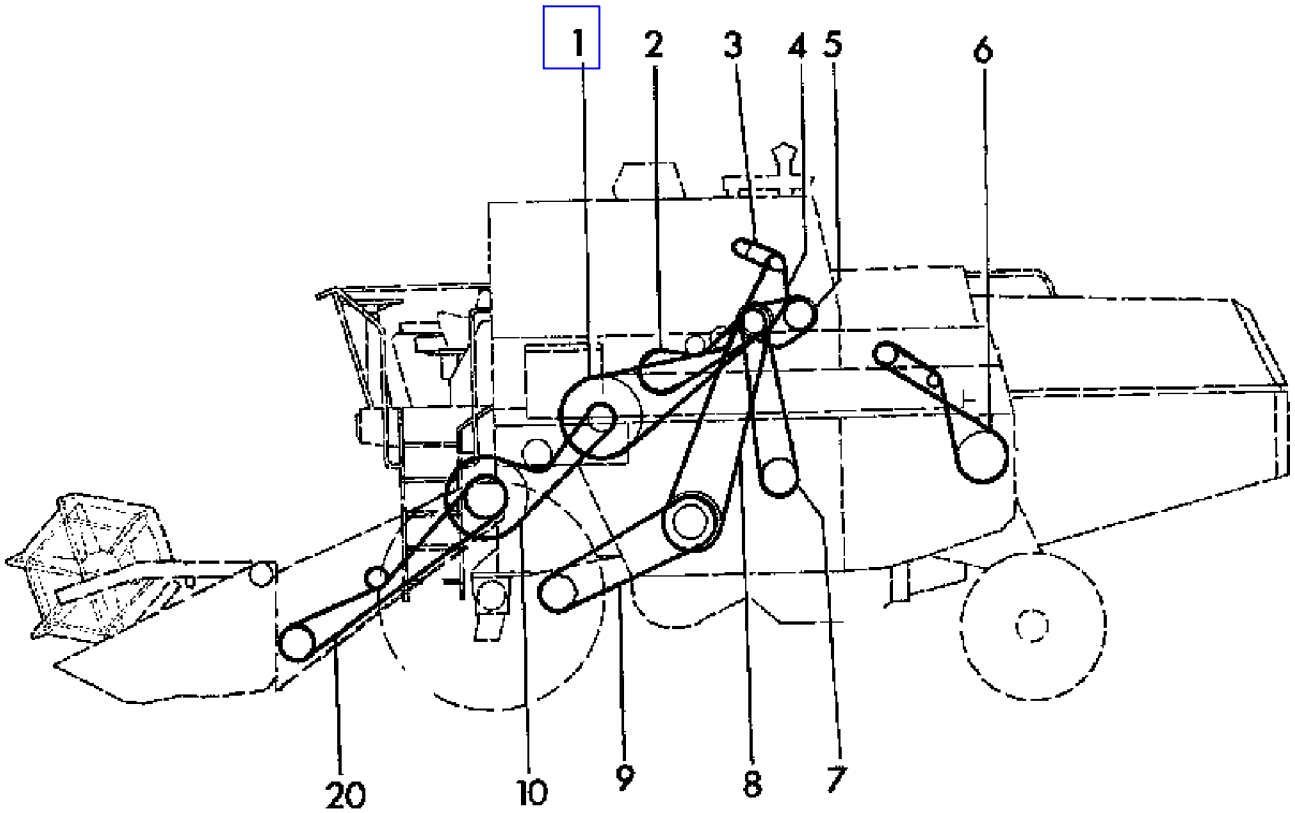

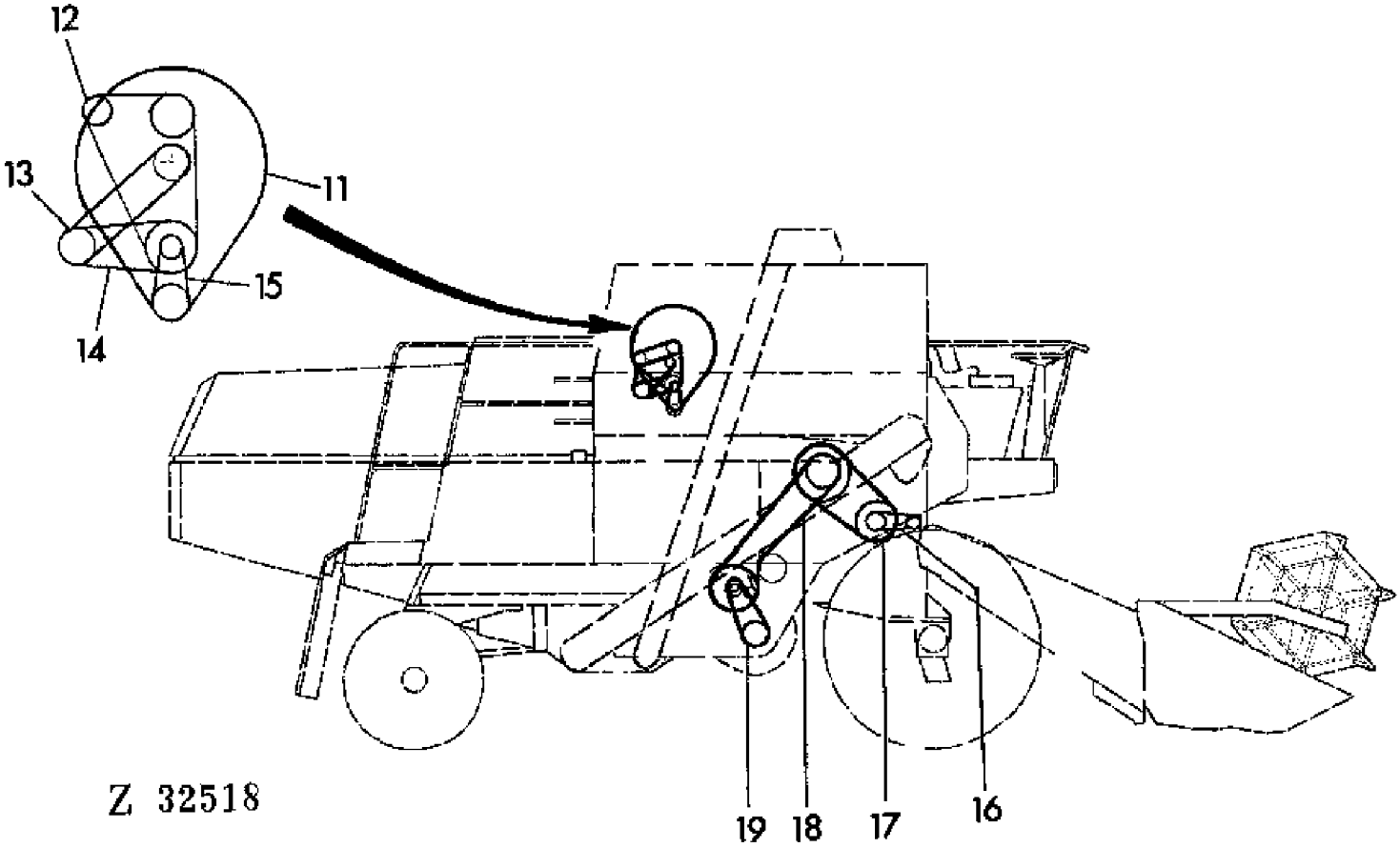

COPYRIGHT©1994 - 2008 DEERE & COMPANY Moline, Illinois All rights reserved

(2H12) DRIVE BELTS
COURROIES D'ENTRAINEMENT
ANTRIEBSRIEMENPLAN
CINGHIE DI COMANDO
CORREAS DE ACCIONAMIENTO
DRIVREMMAR

KEY	PART NO.	PART NAME	QTY	SERIAL NO.		975	975HY/4	REMARKS
1	Z33790	BELT	1			X	X	LGTH = 3725 MM
2	Z47911	BELT	1			X	X	LGTH = 2345 MM (SUB FOR Z33368)
3	CA20514	BELT	1			X	X	LGTH = 1107 MM
4	CA20518	BELT	1			X	X	LGTH = 1120 MM
5	Z34828	BELT	1			X	X	LGTH = 2940 MM
6	Z33605	BELT	1		- 026422	X	X	LGTH = 2940 MM
	Z35965	BELT	1	026423	-	X	X	LGTH = 2740 MM
7	Z41728	BELT	1				X	(SUB FOR Z37476)
8	AZ22914	BELT SET	1			X		KIT
9	Z34099	BELT	1			X		LGTH = 3160 MM
10	Z38186	BELT	1			X	X	LGTH = 3510 MM, AR
	Z21501	BELT	1			X	X	AR, LGTH = 3520 MM
11	Z37192	BELT	1				X	LGTH = 2142 MM
12	AT24833	BELT SET	1		- 389082	X		(B) AR, KIT (2)
	AR72036	BELT SET	1	389083	-	X		(B) AR, KIT (2)
	H79235	BELT	1				X	LGTH = 1498 MM
13	Z38149	BELT	1				X	LGTH = 1390 MM
14	Z38148	BELT	1				X	LGTH = 1132 MM
15	Z32190	BELT	1			X		LGTH = 593 MM
	Z37191	BELT	1				X	
16	Z31867	BELT	1			X	X	
17	Z20823	BELT	1			X	X	LGTH = 2121 MM
18	Z34405	BELT	1			X	X	LGTH = 3060 MM
19	Z41178	BELT	1			X	X	LGTH = 1174 MM
20	Z25670	BELT	1		- 013567	X		(A) LGTH = 4345 MM
	Z36949	BELT	1	013568	- 024652	X	X	(A) LGTH = 4635 MM
	Z39314	BELT	1	024653	-	X	X	(A) LGTH = 4570 MM

(A) FOR FEEDER CONVEYOR LONG
POUR CONVOYEUR D'ALIMENTATION LONG
FUER SCHRAEGFOERDERER LANG
PER COLLO ALOMENTATORE LUNGO
PARA ELEVADOR DE MIES LARGO
FOR LANG INMATNINGSELEVATOR

(B) ENGINE SERIAL NUMBER
NUMERO DE SERIE MOTEUR
MOTOR-SERIENNUMMER
NUMERO MATRICOLA MOTORE
NO DE SERIE DEL MOTOR
MOTORSERIENUMMER

COPYRIGHT©1994 - 2008 DEERE & COMPANY Moline, Illinois All rights reserved

(3F20) DRIVE PARTS FOR HYDROSTATIC REEL DRIVE
ELEMENTS D'ENTRAINEMENT HYDROSTATIQUE DU RABATTEUR
ANTRIEBSTEILE FUER HYDROST.HASPELANTRIEB
PARTI DEL COMANDO IDROSTATICO DELL'ASPO
PIEZAS PARA LA TRANSM.HIDROSTATICA DEL MOLINETE
DELAR FOR HYDROSTATISK HASPELDRIVNING

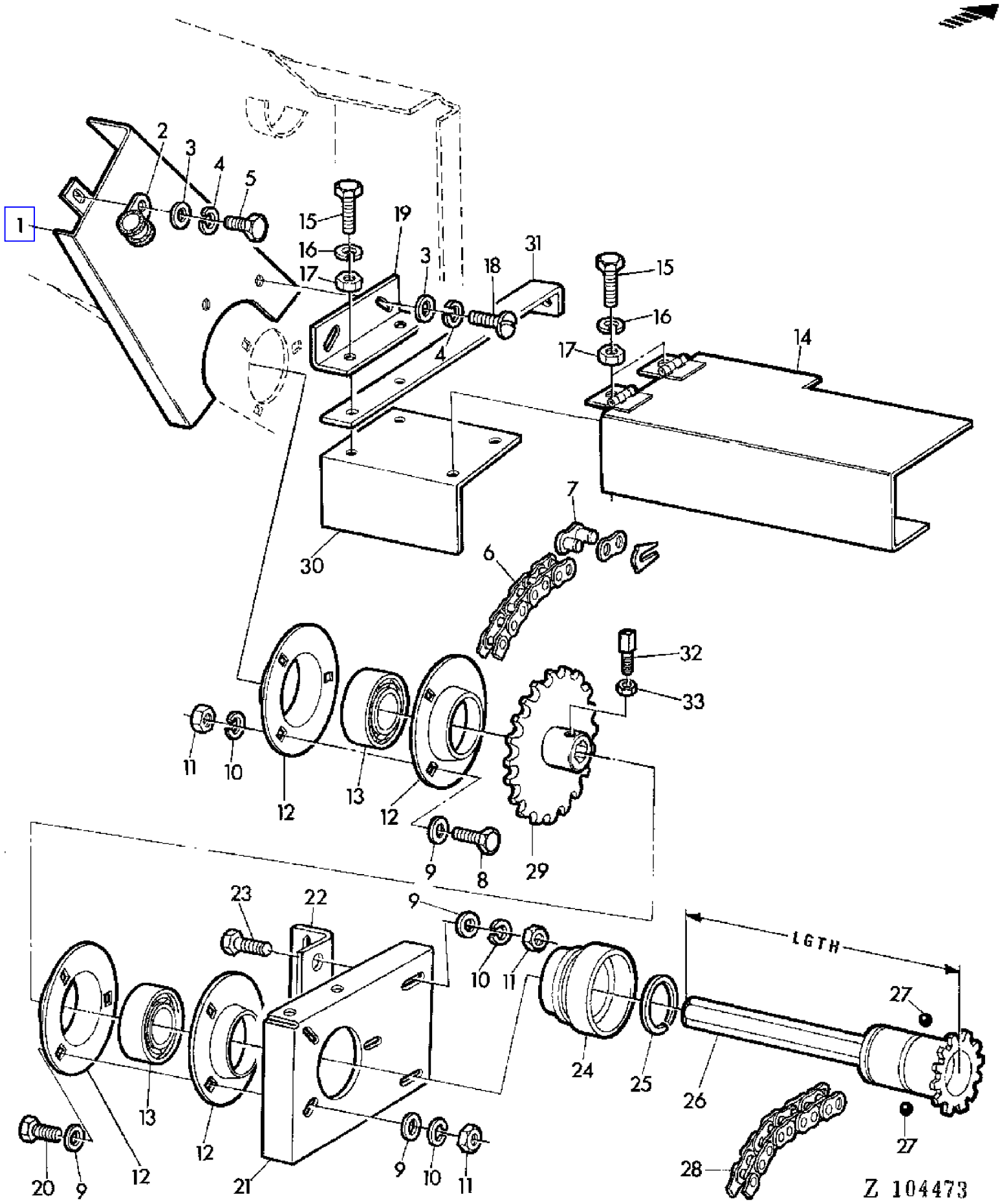

COPYRIGHT©1994 - 2008 DEERE & COMPANY Moline, Illinois All rights reserved

(3F20) DRIVE PARTS FOR HYDROSTATIC REEL DRIVE
ELEMENTS D'ENTRAINEMENT HYDROSTATIQUE DU RABATTEUR
ANTRIEBSTEILE FUER HYDROST.HASPELANTRIEB
PARTI DEL COMANDO IDROSTATICO DELL'ASPO
PIEZAS PARA LA TRANSM.HIDROSTATICA DEL MOLINETE
DELAR FOR HYDROSTATISK HASPELDRIVNING

KEY	PART NO.	PART NAME	QTY	SERIAL NO.	975	975HY/4	REMARKS
1	AZ25029	GUARD	1		X	X	
2	Z28191	CLAMP	1		X	X	
3	24M7088	WASHER	AR		X	X	6,6 MM
4	12M7012	LOCK WASHER	AR		X	X	6 MM
5	19M7286	CAP SCREW	AR		X	X	M6 X 25
6	AZ25031	LINK CHAIN	1		X	X	L = 88, INCL KEY 7
7	AL14207	LINK	1		X	X	
8	19M7382	CAP SCREW	AR		X	X	M10 X 40
9	24M7040	WASHER	AR		X	X	11 MM
10	12M7013	LOCK WASHER	AR		X	X	10 MM
11	14M7140	NUT	AR		X	X	M10
12	Z34740	QUILL	4		X	X	
13	AZ23315	BALL BEARING	2		X	X	
14	AZ25219	GUARD	1		X	X	
15	19M7139	CAP SCREW	4		X	X	M8 X 20
16	12M7008	LOCK WASHER	4		X	X	8 MM
17	14M7029	NUT	4		X	X	M8
18	21M7031	SCREW	2		X	X	M6 X 15
19	Z36046	ANGLE	1		X	X	
20	19M7168	CAP SCREW	AR		X	X	M10 X 30
21	Z35317	BRACKET	1		X	X	
22	Z35318	ANGLE	1		X	X	
23	19M7167	CAP SCREW	AR		X	X	M10 X 25
24	AH89038	QUICK COUPLER	1		X	X	
25	H25360	SNAP RING	1		X	X	
26	AZ20403	DRIVE SHAFT	1		X	X	LGTH = 1935 MM
27	N104243	BALL	3		X	X	
28	AN102383	LINK CHAIN	1		X	X	
29	AZ25030	CHAIN SPROCKET	1		X	X	Z = 42
30	Z36288	SHEET	1		X	X	
31	Z36285	HOLDER	1		X	X	
32	Z26249	SET SCREW	2		X	X	
33	14M7152	NUT	2		X	X	M10

COPYRIGHT©1994 - 2008 DEERE & COMPANY Moline, Illinois All rights reserved

(3F18) DRIVE PULLEY AND IDLER
POULIE D'ENTRAINEMENT ET TENDEUR
ANTRIEBSSCHEIBE UND SPANNROLLE
PULEGGIA COMANDO E TENDITORE
POLEA DE ACCIONAMIENTO Y TENSOR
DRIVSKIVA OCH SPANNARE

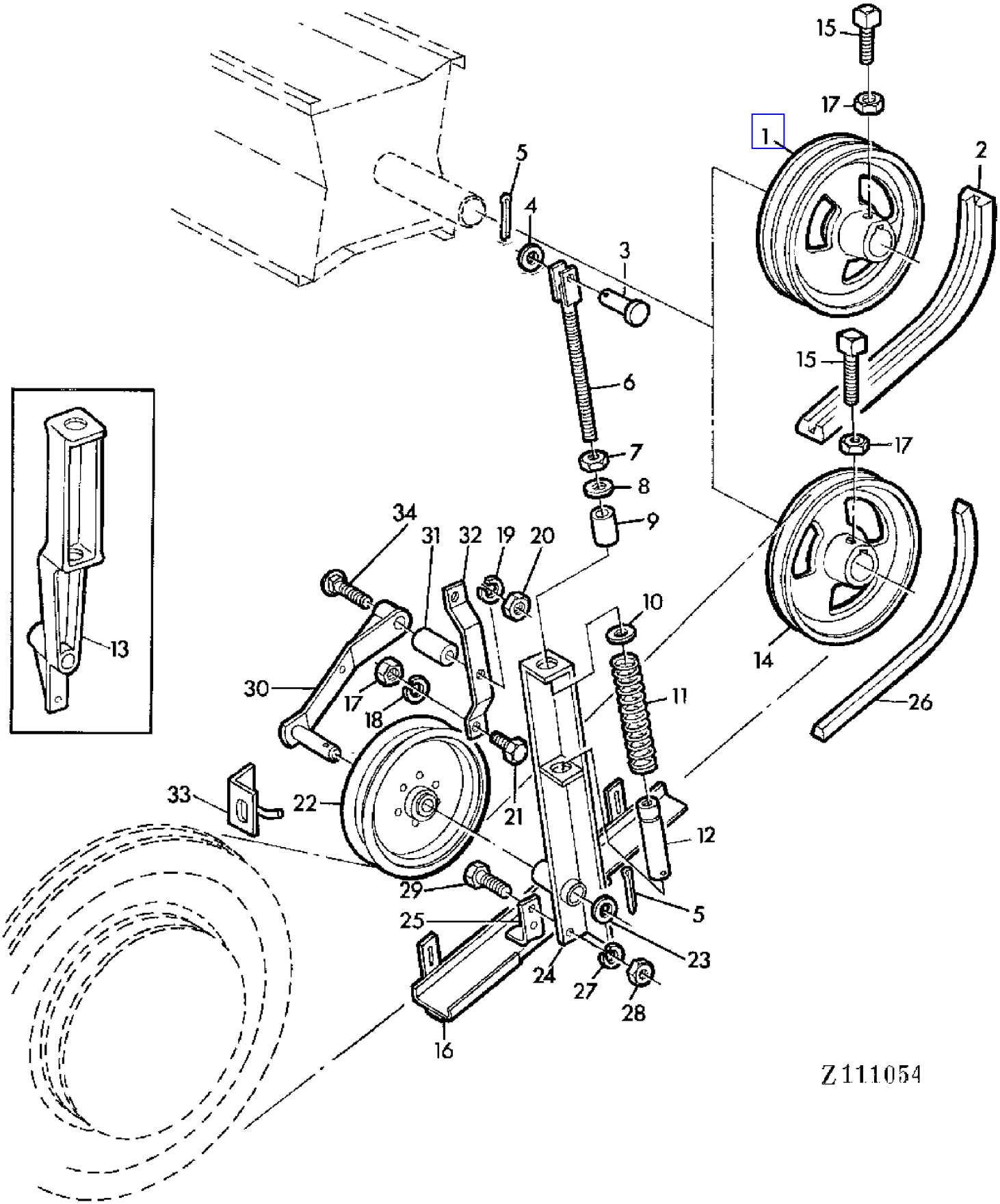

COPYRIGHT©1994 - 2008 DEERE & COMPANY Moline, Illinois All rights reserved

(3F18) DRIVE PULLEY AND IDLER
POULIE D'ENTRAINEMENT ET TENDEUR
ANTRIEBSSCHEIBE UND SPANNROLLE
PULEGGIA COMANDO E TENDITORE
POLEA DE ACCIONAMIENTO Y TENSOR
DRIVSKIVA OCH SPANNARE

KEY	PART NO.	PART NAME	QTY	SERIAL NO.		975	975HY/4	REMARKS
1	Z10749	PULLEY	1			X	X	(B)
2	Z38186	BELT	1			X	X	(B) (SUB FOR Z32568)
3	Z24489	PIN	1			X	X	
4	24M7043	WASHER	1			X	X	12 MM
5	11M7020	COTTER PIN	1			X	X	4 X 25 MM
6	AZ19135	ADJUSTER	1			X	X	(SUB FOR AZ25434)
7	14M7157	NUT	1			X	X	M14
8	24M7112	WASHER	1			X	X	15 MM
9	Z30552	SPACER	1			X	X	
10	L17952	WASHER	1			X	X	
11	Z30554	SPRING	1			X	X	(SUB FOR Z36539)
	.....	COMPRESSION SPRING	1	012532	- 022077	X	X	(ORD AZ29327)
12	AZ19136	SLEEVE	1			X	X	(SUB FOR Z36536)
13	Z10720	BRACKET	1		- 012531	X		
14	Z10748	SHEAVE	1			X		(A)
15	Z32434	SET SCREW	2			X	X	
16	AZ21433	GUIDE	1			X	X	
17	14M7140	NUT	4			X	X	M10
18	12M7013	LOCK WASHER	2			X	X	10 MM
19	12M7014	LOCK WASHER	1			X	X	12 MM
20	14M7031	NUT	2			X	X	M12
21	19M7166	CAP SCREW	2			X	X	M10 X 20
22	AN30569	IDLER	1		- 022077	X	X	(ORD AZ29327 W/ KEY 32)
	AZ29185	IDLER	1	022078	-	X	X	(SUB FOR AZ29037)
23	24M7053	WASHER	1			X	X	17 MM
24	AZ25435	BRACKET	1	012532	- 022077	X	X	(ORD AZ29327 W/KEY 32)
	AZ29039	SUPPORT	1	022078	-	X	X	
25	Z21892	STRAP	1			X	X	
26	Z21501	BELT	1			X	X	(A)
27	12M7008	LOCK WASHER	1			X	X	8 MM
28	14M7029	NUT	1			X	X	M8
29	19M7139	CAP SCREW	1			X	X	M8 X 20
30	AZ18151	LEVER	1		- 022077	X	X	(ORD AZ29327 W/KEY 32)
	AZ29040	LEVER	1	022078	-	X	X	
31	Z39569	BUSHING	1			X	X	(SUB FOR Z29493)
32	Z44501	BRACE	1			X	X	(SUB FOR Z34461, Z39573)
33	AZ28363	HOLDER	1			X	X	
34	03M7155	BOLT	1			X	X	M12 X 75

(A) GRAIN
CEREALES
GETREIDE
GRANO
CEREALES
SAD

(B) MAIZE
MAIS
MAIS
MAIS
MAIZ
MAJS

(C) FOR FIRST REPLACEMENT
POUR PREMIER REMPLACEMENT
FUER ERSTAUSTAUSCH
PER IL PRIMO RICAMBIO
PARA EL PRIMER RECAMBIO
FOR FORSTA UTBYTE

COPYRIGHT©1994 - 2008 DEERE & COMPANY Moline, Illinois All rights reserved

(3F18) DRIVE PULLEY AND IDLER
POULIE D'ENTRAINEMENT ET TENDEUR
ANTRIEBSSCHEIBE UND SPANNROLLE
PULEGGIA COMANDO E TENDITORE
POLEA DE ACCIONAMIENTO Y TENSOR
DRIVSKIVA OCH SPANNARE

KEY	PART NO.	PART NAME	QTY	SERIAL NO.	975	975HY/4	REMARKS
..	AZ29327	CHANNEL	1	- 022077	X	X	(C) INCL KEYS 6-12,22,24,25 30,31

(A) GRAIN
CEREALES
GETREIDE
GRANO
CEREALES
SAD

(B) MAIZE
MAIS
MAIS
MAIS
MAIZ
MAJS

(C) FOR FIRST REPLACEMENT
POUR PREMIER REMPLACEMENT
FUER ERSTAUSTAUSCH
PER IL PRIMO RICAMBIO
PARA EL PRIMER RECAMBIO
FOR FORSTA UTBYTE

COPYRIGHT©1994 - 2008 DEERE & COMPANY Moline, Illinois All rights reserved

(3F12) DRIVE SHAFT FOR CORN HEAD
ARBRE D'ENTRAINEMENT CUEILLEUR A MAIS
ANTRIEBSWELLE FUER MAISPFLUECKVORSATZ/HYDROST.HASPELANTRIEB
ALBERO COMANDO PER SPANNOCCHIATORE
EJE DE ACCIONAMIENTO DEL CABEZAL PARA MAIZ
DRIVAXEL FOR MAJSAGGREGAT

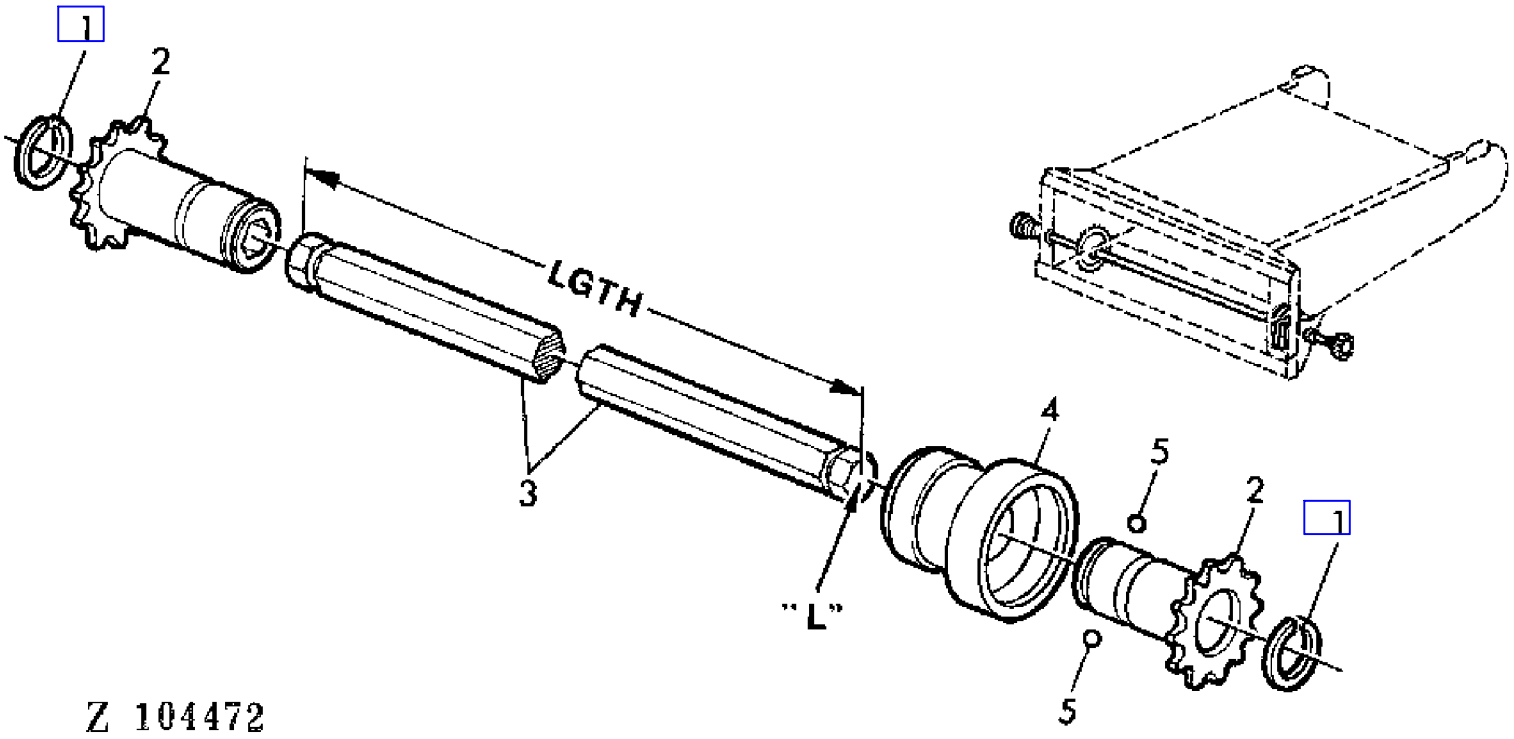

COPYRIGHT©1994 - 2008 DEERE & COMPANY Moline, Illinois All rights reserved

(3F12) DRIVE SHAFT FOR CORN HEAD
ARBRE D'ENTRAINEMENT CUEILLEUR A MAIS
ANTRIEBSWELLE FUER MAISPFLUECKVORSATZ/HYDROST.HASPELANTRIEB
ALBERO COMANDO PER SPANNOCCHIATORE
EJE DE ACCIONAMIENTO DEL CABEZAL PARA MAIZ
DRIVAXEL FOR MAJSAGGREGAT

KEY	PART NO.	PART NAME	QTY	SERIAL NO.	975	975HY/4	REMARKS
1	H80926	SNAP RING	2		X	X	AR
2	AZ33602	CHAIN SPROCKET	2		X	X	AR
3	Z43552	TOOLBAR	1		X	X	AR, LGTH = 2330 MM (91.73")
4	AH89038	QUICK COUPLER	2		X	X	AR
5	N104243	BALL	3		X	X	AR

COPYRIGHT©1994 - 2008 DEERE & COMPANY Moline, Illinois All rights reserved

(3F10) DRIVE SHAFT FOR CORN HEAD (RIGHT-HAND)
ARBRE D'ENTRAINEMENT DU CUEILLEUR A MAIS (DROIT)
ANTRIEBSWELLE FUER MAISPLUECKVORSATZ (RECHTS)
ALBERO DI COMANDO PER SPANNOCHIATORE (DESTRO)
EJE DE ACCIONAMIENTO PARA CABEZAL DE MAIZ (DERECHO)
DRIVAXEL FOR MAJSTROSKNINGSTILLSATS (HOGER)

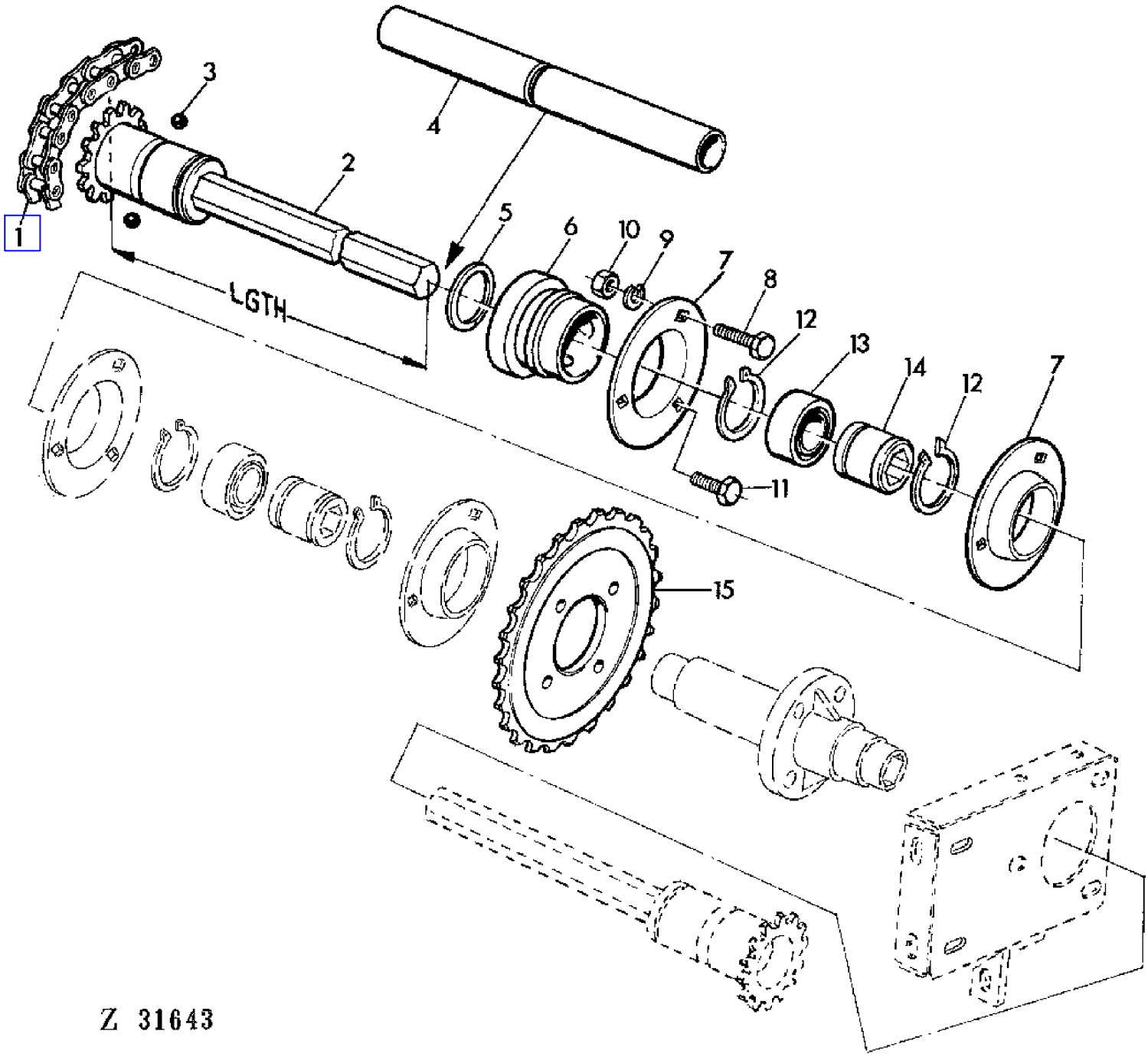

COPYRIGHT©1994 - 2008 DEERE & COMPANY Moline, Illinois All rights reserved

(3F10) DRIVE SHAFT FOR CORN HEAD (RIGHT-HAND)
ARBRE D'ENTRAINEMENT DU CUEILLEUR A MAIS (DROIT)
ANTRIEBSWELLE FUER MAISPLUECKVORSATZ (RECHTS)
ALBERO DI COMANDO PER SPANNOCHIATORE (DESTRO)
EJE DE ACCIONAMIENTO PARA CABEZAL DE MAIZ (DERECHO)
DRIVAXEL FOR MAJSTROSKNINGSTILLSATS (HOGER)

KEY	PART NO.	PART NAME	QTY	SERIAL NO.	975	975HY/4	REMARKS
1	AN102383	LINK CHAIN	1		X	X	RH
2	AZ20403	DRIVE SHAFT	1		X	X	RH, LGTH = 1935 MM (76.5")
3	N104243	BALL	3		X	X	
4	Z31707	GUARD	1		X	X	RH
5	H25360	SNAP RING	1		X	X	RH
6	AH89038	QUICK COUPLER	1		X	X	(SUB FOR AN102530)
7	Z34740	QUILL	2		X	X	
8	19M7169	CAP SCREW	2		X	X	M10 X 35
9	12M7013	LOCK WASHER	3		X	X	10 MM
10	14M7140	NUT	3		X	X	M10
11	19M7168	CAP SCREW	1		X	X	M10 X 30
12	40M1835	SNAP RING	2		X	X	40 X 1,75 MM
13	AZ23315	BALL BEARING	1		X	X	
14	Z30548	COUPLING	1		X	X	
15	Z30558	CHAIN SPROCKET	1		X	X	Z = 24

COPYRIGHT©1994 - 2008 DEERE & COMPANY Moline, Illinois All rights reserved

(4G06) DRIVE-UNLOADING AUGER AND PADDLE ROLL
ENTRAINEMENT-VIS DE VIDANGE ET ROULEAU A PALETTES
ANTRIEB-ENTLEERSCHNECKE UND PADDELWALZE
TRASMISSIONE-COCLEA DI SVUOTAMENTO E CILINDRO A LISTELLI
TRANSMISION-SINFIN DE VACIADO Y CILINDRO DE PALETAS
DRIVNING FOR TOMNINGSSKRUV OCH SKOVELAXEL

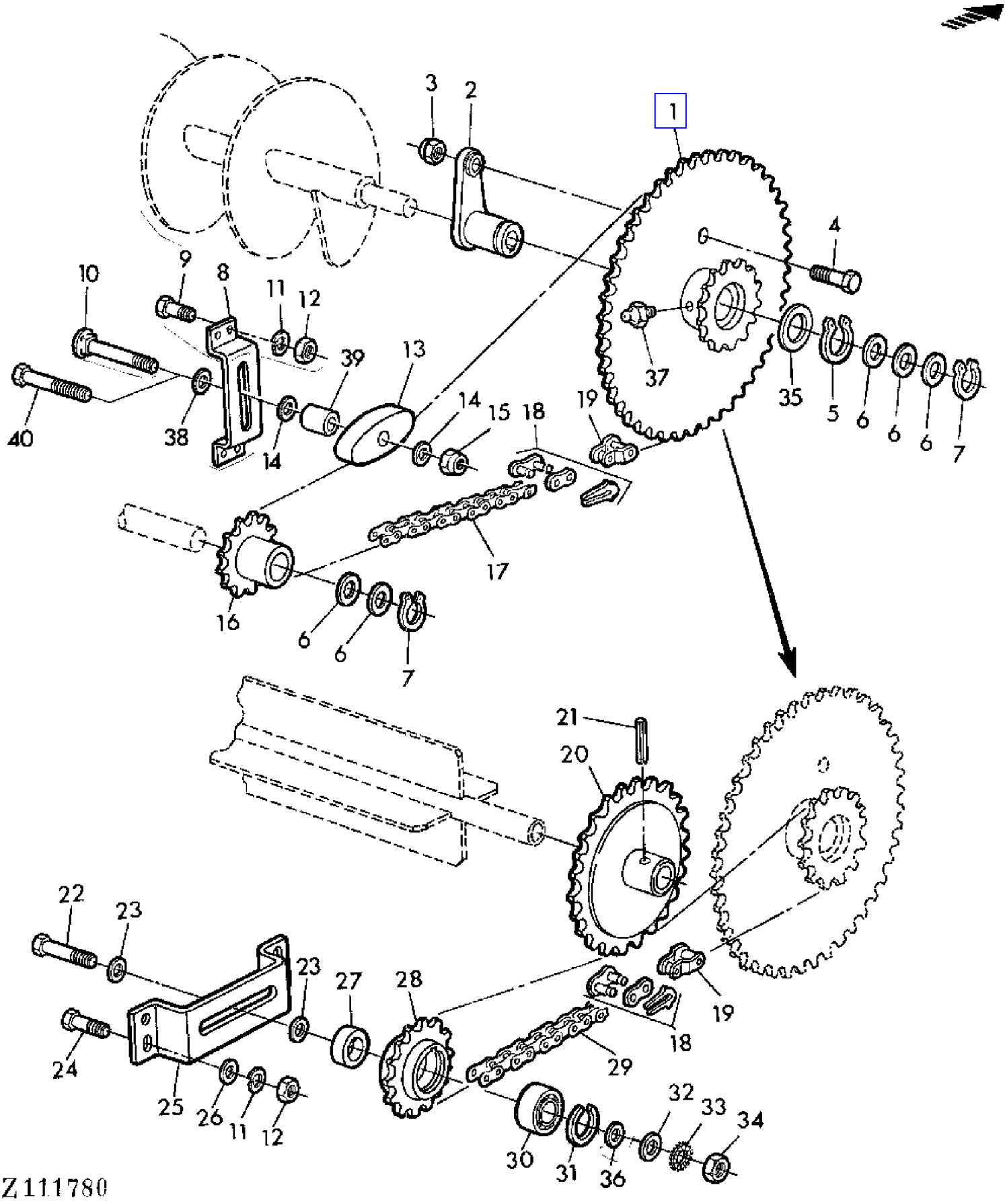

COPYRIGHT©1994 - 2008 DEERE & COMPANY Moline, Illinois All rights reserved

(4G06) DRIVE-UNLOADING AUGER AND PADDLE ROLL
ENTRAINEMENT-VIS DE VIDANGE ET ROULEAU A PALETTES
ANTRIEB-ENTLEERSCHNECKE UND PADDELWALZE
TRASMISSIONE-COCLEA DI SVUOTAMENTO E CILINDRO A LISTELLI
TRANSMISION-SINFIN DE VACIADO Y CILINDRO DE PALETAS
DRIVNING FOR TOMNINGSSKRUV OCH SKOVELAXEL

KEY	PART NO.	PART NAME	QTY	SERIAL NO.	975	975HY/4	REMARKS
1	AZ33053	CHAIN SPROCKET	1		X	X	
2	Z11459	HOLDER	1		X	X	
3	14M7166	LOCK NUT	AR		X	X	M8
4	19M7288	CAP SCREW	1		X	X	M8 X 30
5	40M1839	SNAP RING	AR		X	X	50 X 2 MM
6	24M7199	SHIM	AR		X	X	30 X 42 X 0,5 MM
7	40M1831	SNAP RING	AR		X	X	30 X 1,5 MM
8	Z46033	RETAINER	1		X	X	(SUB FOR Z42259)
9	19M7284	CAP SCREW	AR		X	X	M8 X 18
10	03M7271	BOLT	AR		X	X	M10 X 60
11	12M7008	LOCK WASHER	AR		X	X	8 MM
12	14M7029	NUT	AR		X	X	M8
13	Z41248	TIGHTENER	1	- XXXX	X	X	(ORD Z44031, Z44212)
	Z44031	TIGHTENER	1	XXXX -	X	X	
14	24M7178	WASHER	AR		X	X	10,5 MM
15	14M7167	LOCK NUT	AR		X	X	M10
16	Z11079	CHAIN SPROCKET	1		X	X	
17	AZ32301	ROLLER CHAIN	1		X	X	L = 126, INCL KEYS 18,19
18	AL14209	LINK	1		X	X	
19	AZ12882	LINK	1		X	X	
20	AZ32300	CHAIN SPROCKET	1		X	X	
21	34M7048	SPRING PIN	AR		X	X	8 X 45 MM
22	19M7480	CAP SCREW	AR		X	X	M16 X 55
23	L18889	WASHER	2		X	X	
24	19M7139	CAP SCREW	AR		X	X	M8 X 20
25	Z42263	RETAINER	1		X	X	
26	24M7036	WASHER	AR		X	X	9 MM
27	Z33404	SPACER	1		X	X	
28	Z10398	CHAIN SPROCKET	1		X	X	
29	AZ32304	ROLLER CHAIN	1		X	X	L = 74, INCL KEYS 8,19
30	JD30324	BALL BEARING	1		X	X	
31	L49514	SNAP RING	1		X	X	
32	24M7041	WASHER	AR		X	X	16 MM
33	12M7052	LOCK WASHER	AR		X	X	16 MM
34	14M7142	NUT	AR		X	X	M16
35	24M5640	WASHER	1		X	X	50 X 62 X 1,4 MM
36	L19386	WASHER	1		X	X	
37	58M7004	LUBRICATION FITTING	1		X	X	M6 X 1
38	24M7028	WASHER	2	XXXX -	X	X	10,5 MM
39	Z44212	BUSHING	1	XXXX -	X	X	
40	19M7327	CAP SCREW	1	XXXX -	X	X	M10 X 65

COPYRIGHT©1994 - 2008 DEERE & COMPANY Moline, Illinois All rights reserved

(3D03) DRYER-AIR CONDITIONED CAB
DESHYDRATEUR-CABINE CLIMATISEE
TROCKNER-KABINE MIT KLIMAANLAGE
ESSICCATORE-CABINA CONDIZIONATA
SECADOR-CABINA CON AIRE ACONDICIONADO
GALLERRENARE-HYTT MED LUFTKONDITIONERING

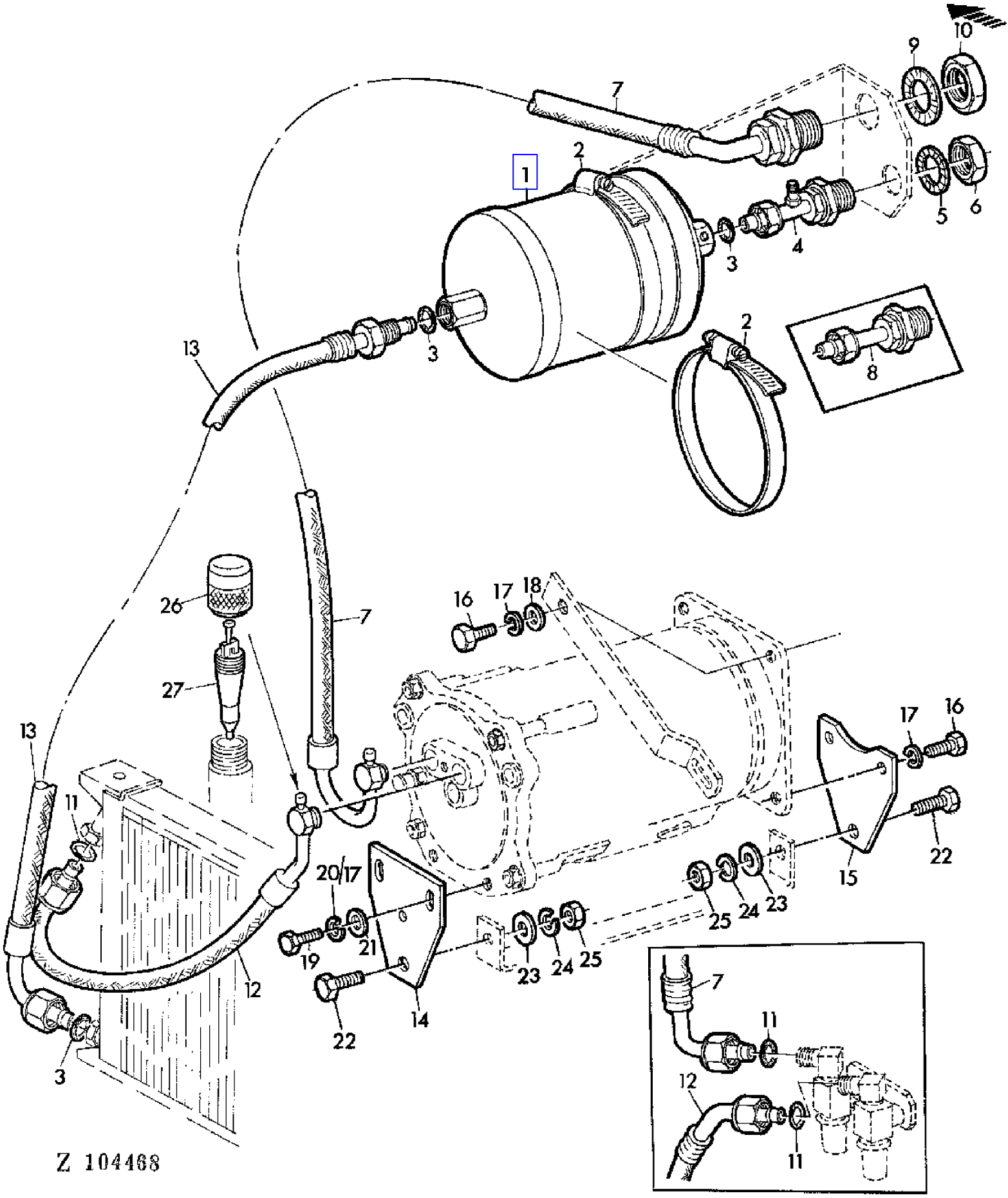

COPYRIGHT©1994 - 2008 DEERE & COMPANY Moline, Illinois All rights reserved

(3D03) DRYER-AIR CONDITIONED CAB
DESHYDRATEUR-CABINE CLIMATISEE
TROCKNER-KABINE MIT KLIMAANLAGE
ESSICCATORE-CABINA CONDIZIONATA
SECADOR-CABINA CON AIRE ACONDICIONADO
GALLERRENARE-HYTT MED LUFTKONDITIONERING

KEY	PART NO.	PART NAME	QTY	SERIAL NO.	975	975HY/4	REMARKS
1	AR59780	RECEIVER-DRYER	1		X	X	
2	Z33087	CLAMP	2		X	X	(SUB FOR Z29925)
3	R10093	O-RING	3		X	X	
4	AZ31714	ELBOW FITTING	1		X	X	
5	CA20544	LOCK WASHER	1		X	X	
6	R53000	NUT	1		X	X	(SUB FOR CA20545)
7	DA20546	HYDRAULIC HOSE	1		X		AR
	DA21763	HOSE	1		X	X	INCL KEYS 26,27
8	DA20542	FITTING	1		X	X	
9	CA20547	LOCK WASHER	1		X	X	
10	R52998	NUT	1		X	X	(SUB FOR CA20548)
11	P51212	O-RING	3		X	X	
12	DA20549	HYDRAULIC HOSE	1		X		AR
	DA21764	HOSE	1		X	X	INCL KEYS 26,27
13	DA20550	HOSE	1		X	X	
14	CA21466	PLATE	1		X	X	
15	H87101	PLATE	1		X	X	
16	19H2551	CAP SCREW	AR	- XXXX	X	X	5/16" X 3/4", AR
	19M7139	CAP SCREW	3	XXXX -	X	X	AR, M8 X 20
17	12H303	LOCK WASHER	AR	- XXXX	X	X	5/16", AR
	12M7008	LOCK WASHER	3	XXXX -	X	X	AR, 8 MM
18	24H1136	WASHER	AR	- XXXX	X	X	11/32" X 11/16", AR
	24M7055	WASHER	1	XXXX -	X	X	AR, 8,4 MM
19	19H1731	CAP SCREW	4	- XXXX	X	X	3/8" X 1", AR
	19M7402	CAP SCREW	2	XXXX -	X	X	AR, M10 X 25
20	12H304	LOCK WASHER	4	- XXXX	X	X	3/8", AR
21	24H1305	WASHER	4	- XXXX	X	X	13/32" X 13/16" X 0.06", AR
	24M7028	WASHER	2	XXXX -	X	X	AR, 10,5 MM
22	19M7167	CAP SCREW	2		X	X	M10 X 25
23	24M7040	WASHER	2		X	X	11 MM
24	12M7013	LOCK WASHER	2		X	X	10 MM
25	14M7140	NUT	2		X	X	M10
26	R60172	NUT	2		X	X	
27	R60170	VALVE	2		X	X	

COPYRIGHT©1994 - 2008 DEERE & COMPANY Moline, Illinois All rights reserved

(2B08) DUAL HYDRAULIC PUMP
POMPE HYDRAULIQUE DOUBLE
DOPPEL-HYDRAULIKPUMPE
POMPA IDRAULICA DOPPIA
BOMBA HIDRAULICA DE DOBLE ACCION
DUBBEL HYDRAULPUMP

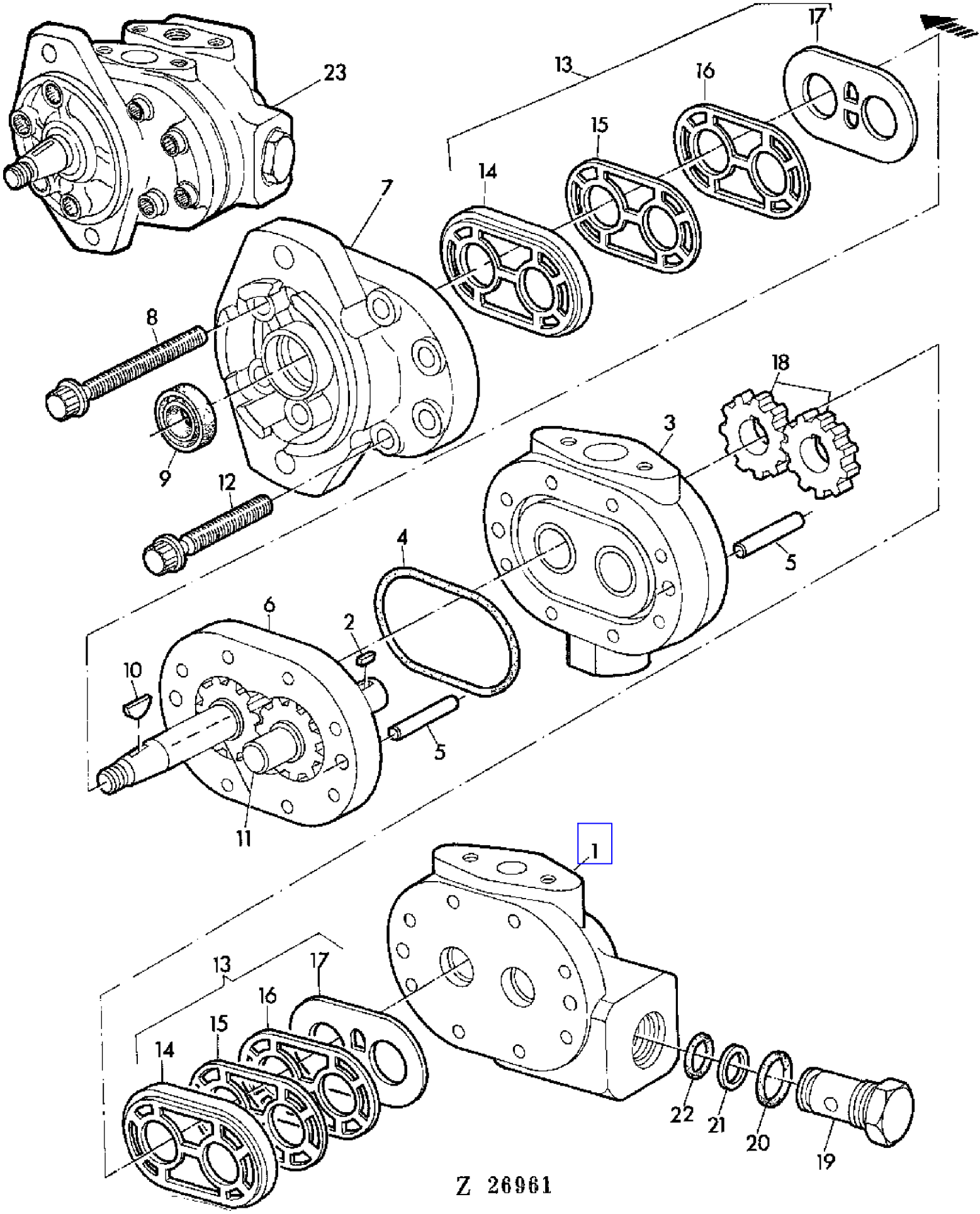

COPYRIGHT©1994 - 2008 DEERE & COMPANY Moline, Illinois All rights reserved

(2B08) DUAL HYDRAULIC PUMP
POMPE HYDRAULIQUE DOUBLE
DOPPEL-HYDRAULIKPUMPE
POMPA IDRAULICA DOPPIA
BOMBA HIDRAULICA DE DOBLE ACCION
DUBBEL HYDRAULPUMP

KEY	PART NO.	PART NAME	QTY	SERIAL NO.	975	975HY	REMARKS
1	AZ24124	FLOW DIVIDER	1		X	X	
2	N111500	SHAFT KEY	1		X	X	
3	AZ24126	HOUSING	1		X	X	
4	H80821	O-RING	1		X	X	
5	H80815	PIN	4		X	X	
6	Z35144	HOUSING	1		X	X	
7	AZ19696	HOUSING	1		X	X	
8	Z35145	BOLT	4		X	X	
9	Z31038	SEAL	1		X	X	
10	N34986	SHAFT KEY	1		X	X	
11	AZ24170	GEAR	1		X	X	
12	Z35146	BOLT	4		X	X	
13	AZ24169	GASKET KIT	1		X	X	KIT, INCL KEYS 4,9,14-17,20-22
14	Z31039	GASKET	2		X	X	
15	T12959	GASKET	2		X	X	
16	T12958	GASKET	2		X	X	
17	T12957	DIAPHRAGM	2		X	X	
18	AZ24171	GEAR	1		X	X	KIT
19	AZ24157	RELIEF VALVE	1		X	X	
20	T13119	O-RING	1		X	X	
21	H63357	BACK-UP RING	1		X	X	
22	R375R	O-RING	1		X	X	
23	AZ23113	HYDRAULIC PUMP	1		X	X	ASSY, INCL KEYS 1-22

COPYRIGHT©1994 - 2008 DEERE & COMPANY Moline, Illinois All rights reserved

(1I07) DUAL-STAGE CLUTCH
EMBRAYAGE DOUBLE EFFET
ZWEIFACHKUPPLUNG
FRIZIONE A DOPPIO STADIO
EMBRAGUE DOBLE
TVASTEGSKOPPLING

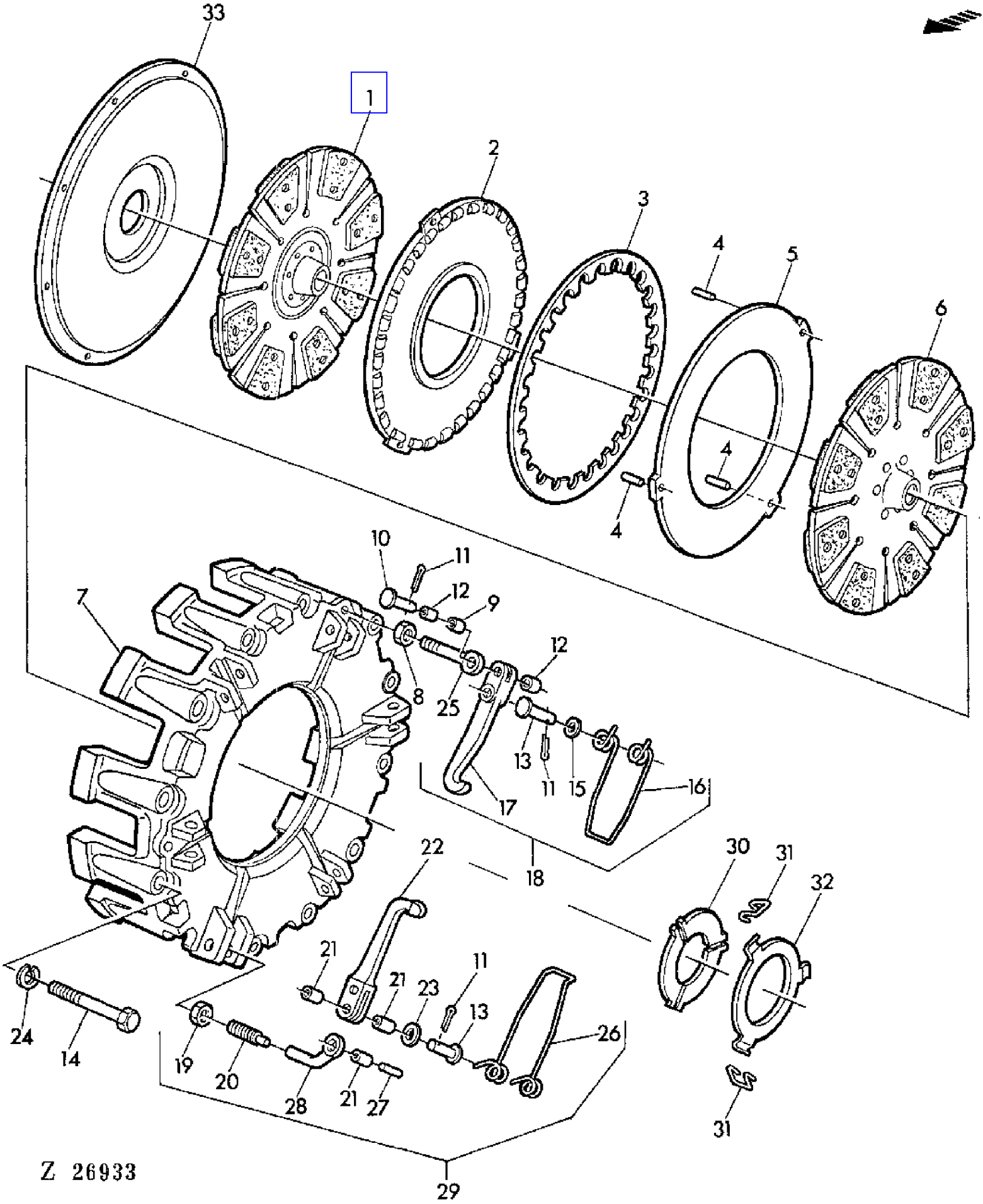

COPYRIGHT©1994 - 2008 DEERE & COMPANY Moline, Illinois All rights reserved

(1I07) DUAL-STAGE CLUTCH
EMBRAYAGE DOUBLE EFFET
ZWEIFACHKUPPLUNG
FRIZIONE A DOPPIO STADIO
EMBRAGUE DOBLE
TVASTEGSKOPPLING

KEY	PART NO.	PART NAME	QTY	SERIAL NO.	REMARKS
1	AZ24041	CLUTCH DISK	1		
2	Z10992	THRUST WASHER	1		
3	Z35081	DISK SPRING	1		
4	34M7089	DOWEL PIN	3		
5	Z10993	THRUST WASHER	1		
6	AZ24042	CLUTCH DISK	1		
7	Z10991	HOUSING	1		
8	Z35097	NUT	AR		
9	.....	SPACER	3		NSEP (ORD AZ24103)
10	.....	PIN	3		NSEP (ORD AZ24103)
11	11M7011	COTTER PIN	AR		
12	.....	SPACER	6		NSEP (ORD AZ24103)
13	Z35087	PIN	6		
14	19H2044	CAP SCREW	12		5/16" X 4"
15	.....	WASHER	3		NSEP (ORD AZ24103)
16	.....	LEAF SPRING	3		NSEP (ORD AZ25119)
17	.....	LEVER	3		NSEP (ORD AZ24103)
18	AZ24103	LEVER	AR		KIT, INCL KEYS (3) 9 - (3) 16,30
19	.....	NUT	3		NSEP (ORD AZ24102)
20	.....	STUD	3		NSEP (ORD AZ24102)
21	.....	BUSHING	9		NSEP (ORD AZ24102)
22	.....	LEVER	3		NSEP (ORD AZ24102)
23	.....	WASHER	3		NSEP (ORD AZ24102)
24	12M7008	LOCK WASHER	12		8 MM
25	.....	EYEBOLT	3		NSEP (ORD AZ24103)
26	.....	LEAF SPRING	3		NSEP (ORD AZ25119)
27	.....	PIN	3		NSEP (ORD AZ24102)
28	.....	EYEBOLT	3		NSEP (ORD AZ24102)
29	AZ24102	KIT	AR		KIT, INCL KEYS (3) 19 - (3) 28,31,32
30	Z35082	THRUST WASHER	1		
31	.....	LEAF SPRING	3		NSEP (ORD AZ25119)
32	AZ24105	THRUST WASHER	1		
33	Z10983	FLYWHEEL	1		
..	AZ24104	CLUTCH	1		ASSY, INCL KEYS 2-32
..	AZ25119	KIT	1		KIT, INCL KEYS (3)16, (3)26, (3)31

COPYRIGHT©1994 - 2008 DEERE & COMPANY Moline, Illinois All rights reserved

(1D10) ELECTRICAL FUEL TRANSFER PUMP
POMPE D'ALIMENTATION ELECTRIQUE
ELEKTRISCHE KRAFTSTOFFOERDERPUMPE
POMPA ALIMENTAZIONE ELETTRICA
BOMBA ELECTRICA DE ALIMENTACION DE COMBUSTIBLE
ELEKTRISK BRANSLEPUMP

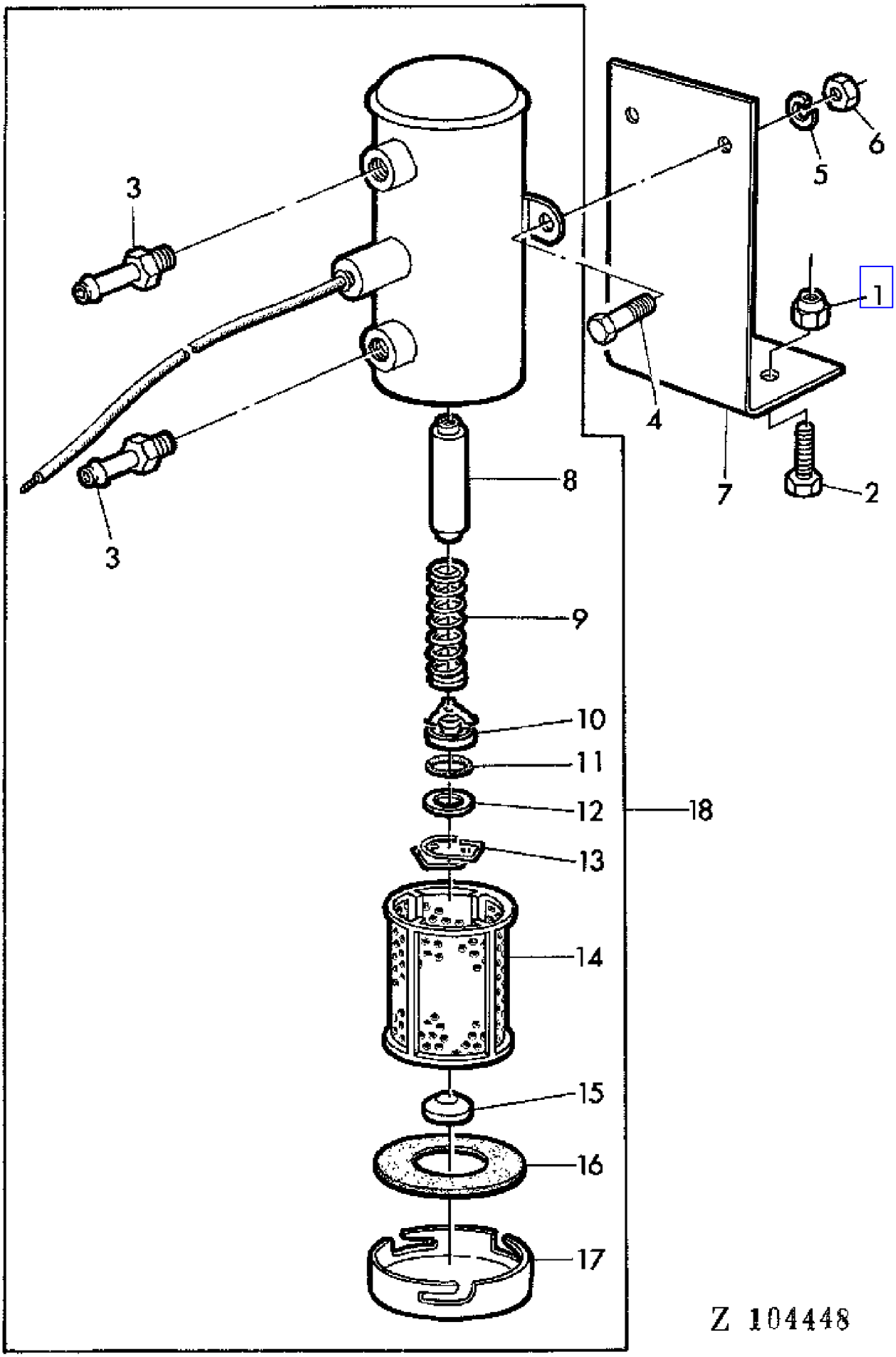

COPYRIGHT©1994 - 2008 DEERE & COMPANY Moline, Illinois All rights reserved

(1D10) ELECTRICAL FUEL TRANSFER PUMP
POMPE D'ALIMENTATION ELECTRIQUE
ELEKTRISCHE KRAFTSTOFFOERDERPUMPE
POMPA ALIMENTAZIONE ELETTRICA
BOMBA ELECTRICA DE ALIMENTACION DE COMBUSTIBLE
ELEKTRISK BRANSLEPUMP

KEY	PART NO.	PART NAME	QTY	SERIAL NO.		975	975HY/4	REMARKS
1	14M7167	LOCK NUT	2	015898	-	X	X	M10
2	19M7169	CAP SCREW	2	015898	-	X	X	M10 X 35
3	Z36816	THREADED NIPPLE	2	015898	-	X	X	
4	19M7375	CAP SCREW	2	015898	-	X	X	M6 X 18
5	12M7012	LOCK WASHER	2	015898	-	X	X	6 MM
6	14M7027	NUT	2	015898	-	X	X	M6
7	Z44276	RETAINER	1	015898	-	X	X	(SUB FOR Z36818)
8	AZ27952	FOLLOWER	1	015898	-	X	X	(SUB FOR AH66236)
9	R57443	SPRING	1	015898	-	X	X	
10	AH66237	GUIDE	1	015898	-	X	X	ASSY
11	H65169	O-RING	1	015898	-	X	X	
12	H65163	WASHER	1	015898	-	X	X	
13	H65168	CLAMP	1	015898	-	X	X	
14	Z39600	FUEL FILTER	1	015898	-	X	X	(SUB FOR H65167)
15	H65162	MAGNET	1	015898	-	X	X	
16	H65166	WASHER	1	015898	-	X	X	
17	H65164	COVER	1	015898	-	X	X	
18	AR67543	FUEL PUMP	1			X	X	(ORD AZ27951)
	AZ27951	FUEL PUMP	1	015898	-	X	X	

COPYRIGHT©1994 - 2008 DEERE & COMPANY Moline, Illinois All rights reserved

(1F24) ELECTRICAL GROUND SPEED INDICATOR
INDICATEUR ELECTRIQUE DE VITESSE
ELEKTRISCHE FAHRGESCHWINDIGKEITSANZEIGE
INDICATORE ELETTRICO DI VELOCITA
INDICADOR ELECTRICO DE LA VELOCIDAD DE MARCHA
ELEKTRISK KORHASTIGHETSMATARE

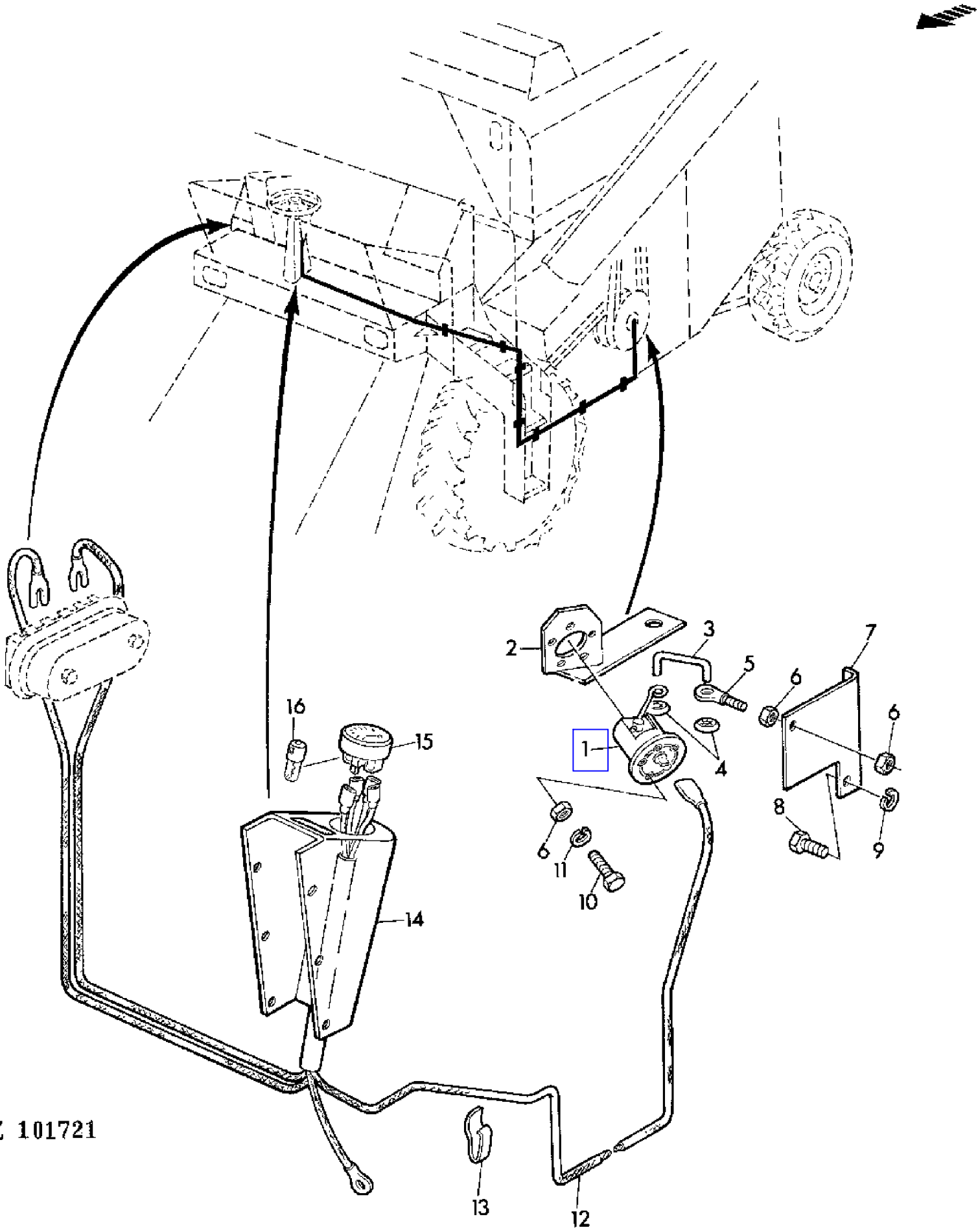

COPYRIGHT©1994 - 2008 DEERE & COMPANY Moline, Illinois All rights reserved

(1F24) ELECTRICAL GROUND SPEED INDICATOR
INDICATEUR ELECTRIQUE DE VITESSE
ELEKTRISCHE FAHRGESCHWINDIGKEITSANZEIGE
INDICATORE ELETTRICO DI VELOCITA
INDICADOR ELECTRICO DE LA VELOCIDAD DE MARCHA
ELEKTRISK KORHASTIGHETSMATARE

KEY	PART NO.	PART NAME	QTY	SERIAL NO.	975	975HY/4	REMARKS
1	AZ24218	SENDER	1		X		
2	AZ24504	HOLDER	1		X		
3	Z35552	PIN	1		X		
4	Z35553	CLIP	2		X		
5	Z36576	EYEBOLT	1		X		(SUB FOR 21M7217)
6	14M7028	NUT	7		X		M5
7	Z35551	HOLDER	1		X		
8	19M3003	CAP SCREW	AR		X		1/4" X 1/2"
9	12H302	LOCK WASHER	AR		X		1/4"
10	19M7372	CAP SCREW	5		X		M5 X 16
11	12M7011	LOCK WASHER	5		X		5 MM
12	AZ24214	WIRING HARNESS	1		X		
13	Z24278	CLAMP	7		X		
14	Z41947	CASE	1		X		(SUB FOR Z35548)
15	AZ24217	GAUGE	1		X		
16	57M6343	BULB	1		X		

COPYRIGHT©1994 - 2008 DEERE & COMPANY Moline, Illinois All rights reserved

(3D23) ELECTRICAL SYSTEM-AIR CONDITIONED CAB
EQUIPEMENT ELECTRIQUE-CABINE CLIMATISEE
ELEKTRIK-KABINE MIT KLIMAANLAGE
IMPIANTO ELETTRICO-CABINA CONDIZIONATA
SISTEMA ELECTRICO-CABINA CON AIRE ACONDICIONADO
EL-SYSTEM-HYTT MED LUFTKONDITIONERING

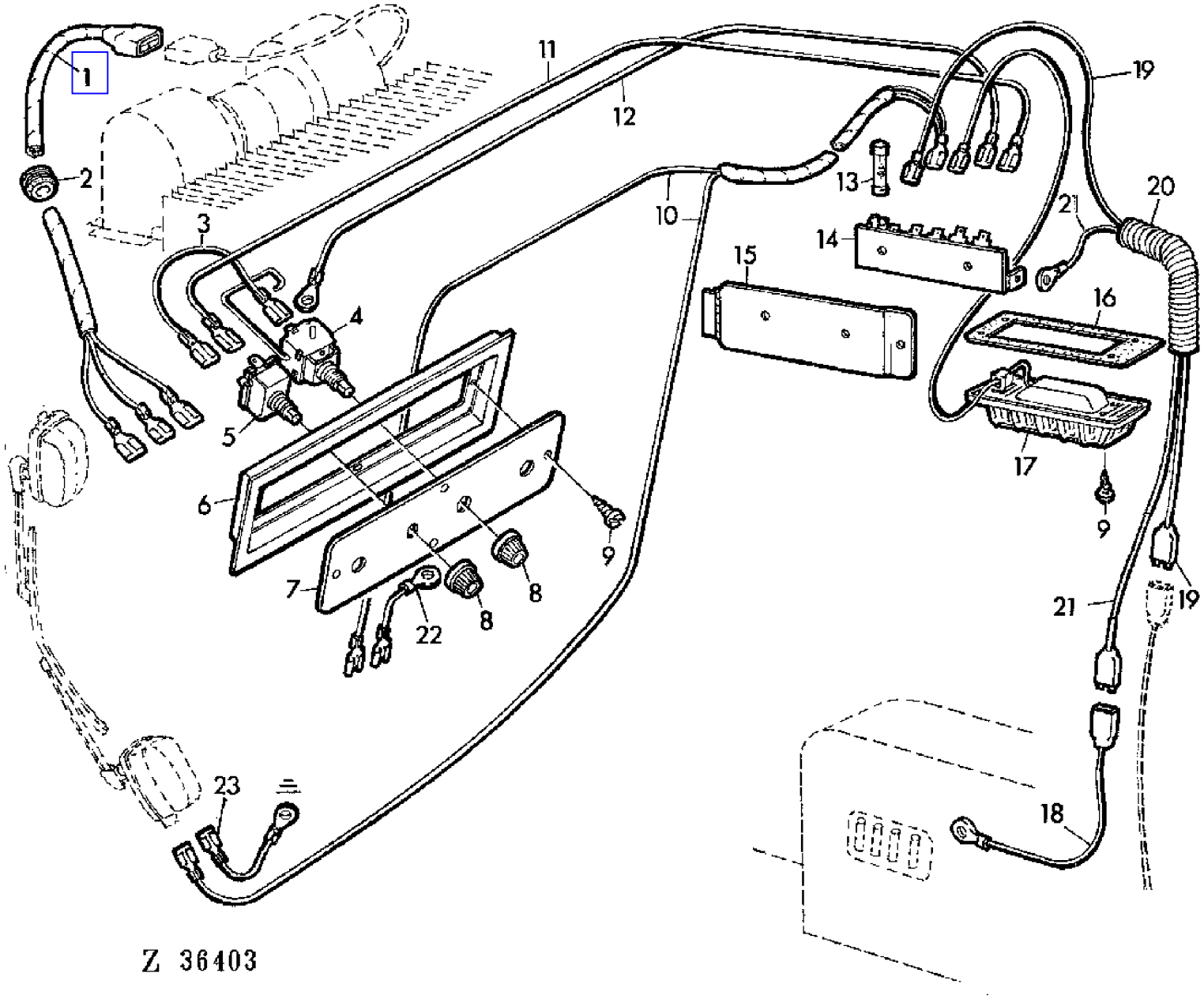

COPYRIGHT©1994 - 2008 DEERE & COMPANY Moline, Illinois All rights reserved

(3D23) ELECTRICAL SYSTEM-AIR CONDITIONED CAB
EQUIPEMENT ELECTRIQUE-CABINE CLIMATISEE
ELEKTRIK-KABINE MIT KLIMAANLAGE
IMPIANTO ELETTRICO-CABINA CONDIZIONATA
SISTEMA ELECTRICO-CABINA CON AIRE ACONDICIONADO
EL-SYSTEM-HYTT MED LUFTKONDITIONERING

KEY	PART NO.	PART NAME	QTY	SERIAL NO.	975	975HY/4	REMARKS
1	AH80182	WIRING HARNESS	1		X	X	
2	H81679	GROMMET	1		X	X	
3	AH88879	WIRING LEAD	1		X	X	
4	AH80197	SWITCH	1		X	X	
5	AH84588	SWITCH	1		X	X	
6	H85835	HOUSING	1		X	X	
7	AH80690	PANEL	1		X	X	
8	AH80168	KNOB	2		X	X	
9	37H1	SCREW	4		X	X	
10	DA20345	WIRING HARNESS	1		X	X	
11	AH84586	WIRING LEAD	1		X	X	
12	AH88880	WIRING LEAD	1		X	X	
13	AH80089	FUSE	AR		X	X	7,5 AMP, KIT
	AH80711	FUSE	AR		X	X	30 AMP, KIT
14	AH80713	FUSE BOX	1		X	X	
15	AH80521	DOOR	1		X	X	
16	H84109	GASKET	1		X	X	
17	AH80210	LAMP	1		X	X	
18	CA20346	CABLE	1		X	X	
19	AH88883	WIRING LEAD	1		X	X	
20	H88857	CONDUIT	1		X	X	33/64" OD X 120", (13 MM X 3048 MM)
21	AH80340	WIRE	1		X	X	
22	CA19447	POWER CORD	1		X	X	
23	CA19446	CABLE	1		X	X	

COPYRIGHT©1994 - 2008 DEERE & COMPANY Moline, Illinois All rights reserved

(3D24) ELECTRICAL SYSTEM-AIR CONDITIONED CAB
EQUIPEMENT ELECTRIQUE-CABINE CLIMATISEE
ELEKTRIK-KABINE MIT KLIMAANLAGE
IMPIANTO ELETTRICO-CABINA CONDIZIONATA
SISTEMA ELECTRICO-CABINA CON AIRE ACONDICIONADO
EL-SYSTEM-HYTT MED LUFTKONDITIONERING

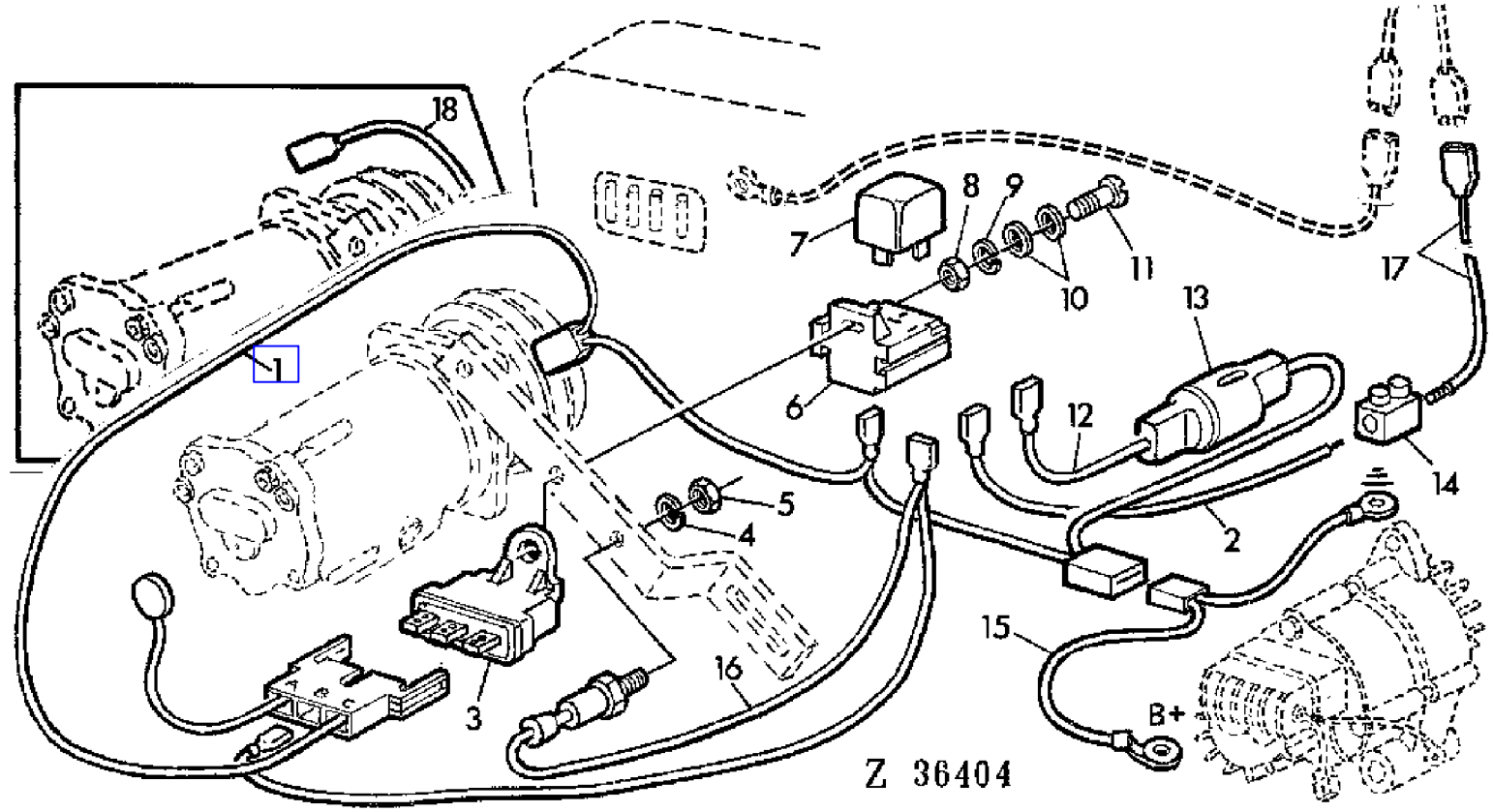

COPYRIGHT©1994 - 2008 DEERE & COMPANY Moline, Illinois All rights reserved

(3D24) ELECTRICAL SYSTEM-AIR CONDITIONED CAB
EQUIPEMENT ELECTRIQUE-CABINE CLIMATISEE
ELEKTRIK-KABINE MIT KLIMAANLAGE
IMPIANTO ELETTRICO-CABINA CONDIZIONATA
SISTEMA ELECTRICO-CABINA CON AIRE ACONDICIONADO
EL-SYSTEM-HYTT MED LUFTKONDITIONERING

KEY	PART NO.	PART NAME	QTY	SERIAL NO.	975	975HY/4	REMARKS
1	AZ29056	WIRING HARNESS	1		X	X	(SUB FOR AR77345)
2	AZ29062	WIRING LEAD	1		X	X	(SUB FOR DA21755)
3	AR77344	FUSE	1		X	X	
4	12M7011	LOCK WASHER	1		X	X	5 MM
5	14M7028	NUT	1		X	X	M5
6	AZ26995	RECEPTACLE CONNECTOR BODY	1		X	X	
7	AZ26996	RELAY	1		X	X	
8	14M7139	NUT	1		X	X	M4
9	12M7031	LOCK WASHER	1		X	X	4 MM
10	24M7117	WASHER	2		X	X	4,3 MM
11	21H1295	SCREW	1	- XXXX	X	X	AR, 5/8"
	21M7033	SCREW	1	XXXX -	X	X	AR, M4 X 16
12	AZ29063	POWER CORD	1		X	X	
13	AZ29064	FUSE HOLDER	1		X	X	
14	AZ29273	TERMINAL	1		X	X	
15	AZ29059	WIRING HARNESS	1		X	X	
16	AZ29061	WIRING HARNESS	1		X	X	
17	CA20348	POWER CORD	1		X	X	
18	AR48957	WIRING LEAD	1	- XXXX	X	X	AR

COPYRIGHT©1994 - 2008 DEERE & COMPANY Moline, Illinois All rights reserved

(1F02) ELECTRICAL WARNING SYSTEM
SYSTEME AVERTISSEMENT
ELEKTRISCHES WARNSYSTEM
IMPIANTO ELETTRICO AVVISATORI
SISTEMA ELECTRICO DE ALARMA
ELEKTRISK SYSTEM AV VARNINGSANORDNINGAR

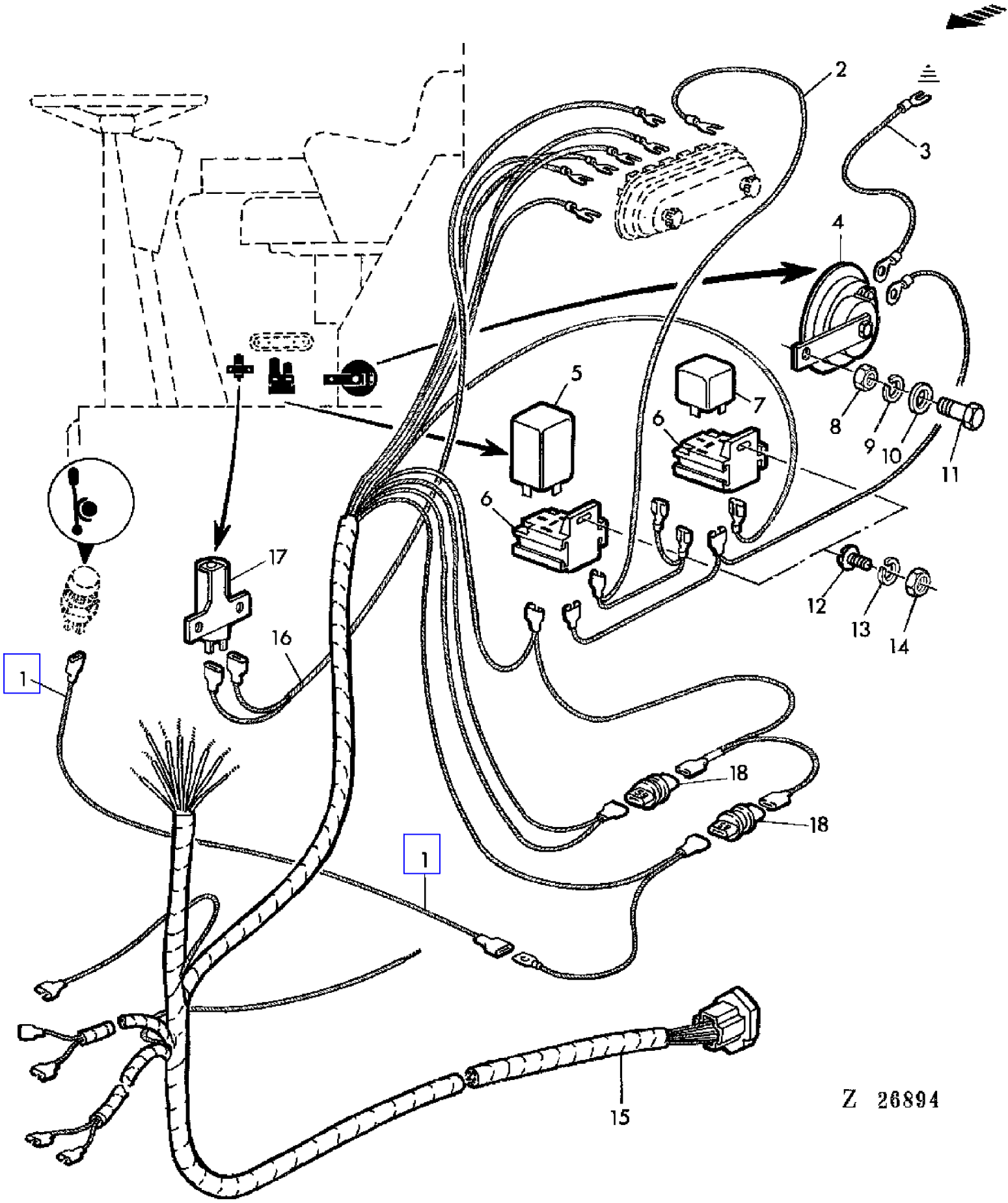

COPYRIGHT©1994 - 2008 DEERE & COMPANY Moline, Illinois All rights reserved

(1F02) ELECTRICAL WARNING SYSTEM
SYSTEME AVERTISSEMENT
ELEKTRISCHES WARNSYSTEM
IMPIANTO ELETTRICO AVVISATORI
SISTEMA ELECTRICO DE ALARMA
ELEKTRISK SYSTEM AV VARNINGSANORDNINGAR

KEY	PART NO.	PART NAME	QTY	SERIAL NO.		975	975HY/4	REMARKS
1	AZ23586	WIRING HARNESS	1	017018	-	X	X	
2	AZ27007	WIRING HARNESS	1	017018	-	X	X	
3	AZ27006	CABLE	1	017018	-	X	X	
4	AZ27000	HORN	1	017018	-	X	X	
5	AZ26993	RELAY	1	017018	-	X	X	
6	AZ26995	RECEPTACLE CONNECTOR BODY	2	017018	-	X	X	
7	AZ26996	RELAY	1	017018	-	X	X	
8	14M7140	NUT	1	017018	-	X	X	M10
9	12M7013	LOCK WASHER	1	017018	-	X	X	10 MM
10	24M7040	WASHER	1	017018	-	X	X	11 MM
11	19M7166	CAP SCREW	1	017018	-	X	X	M10 X 20
12	21M7140	SCREW	2	017018	-	X	X	M5 X 10
13	12M7011	LOCK WASHER	2	017018	-	X	X	5 MM
14	14M7028	NUT	2	017018	-	X	X	M5
15	AZ27003	WIRING HARNESS	1	017018	-	X		
	AZ27004	WIRING HARNESS	1			X		
16	AZ27005	WIRING HARNESS	1	017018	-	X	X	
17	AZ23051	FLASHER	1	017018	-	X	X	
18	AZ23107	DIODE	2	017018	-	X	X	

COPYRIGHT©1994 - 2008 DEERE & COMPANY Moline, Illinois All rights reserved

(3C16) ELECTRICAL WIRING-STANDARD CAB
CABLES ELECTRIQUES-CABINE STANDARD
ELEKTRIK-STANDARD-KABINE
CAVI ELETTRICI-CABINA STANDARD
CABLES ELECTRICOS-CABINA STANDARD
ELEKTRISKA KABLAR-STANDARD FORARHYTT

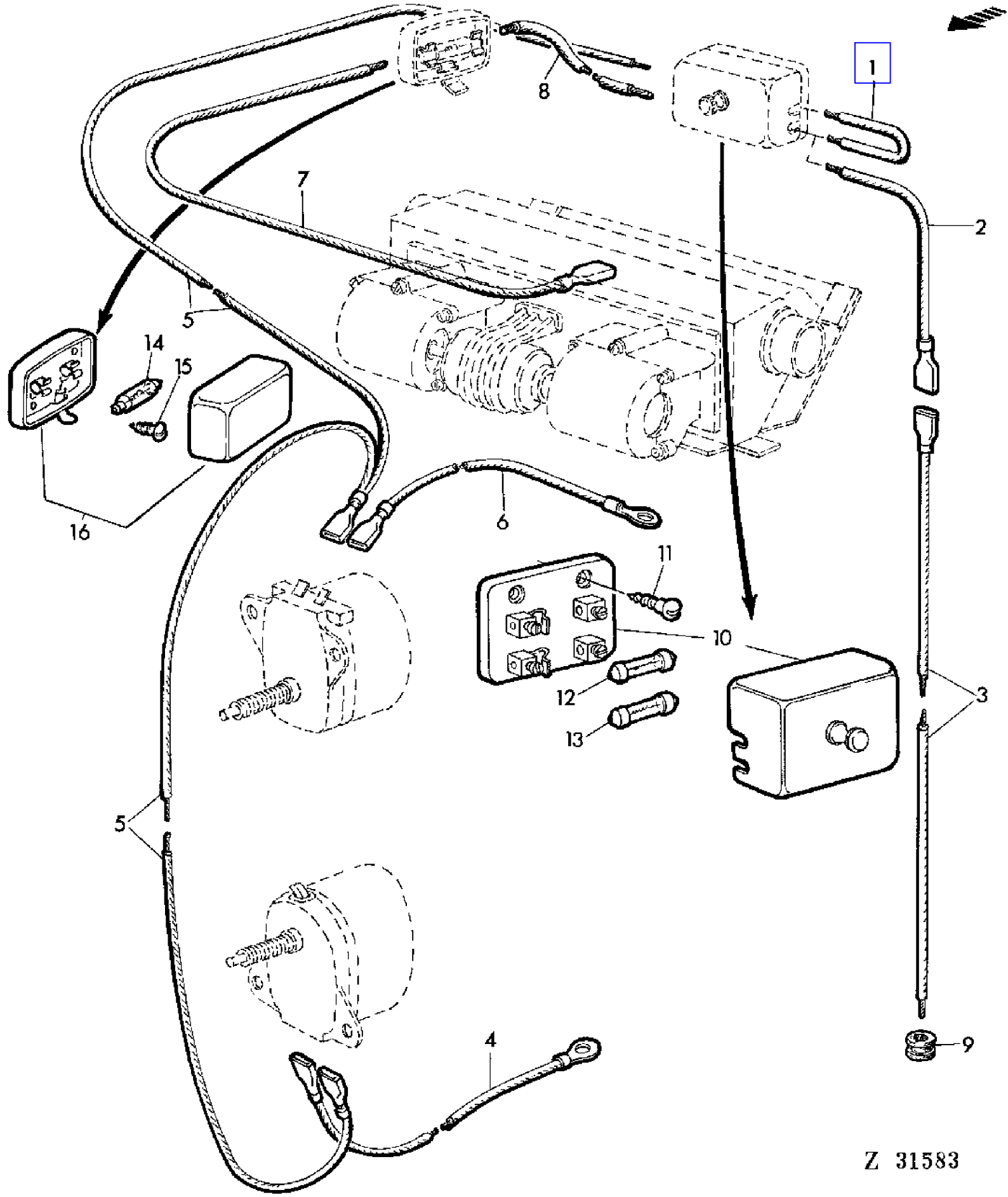

COPYRIGHT©1994 - 2008 DEERE & COMPANY Moline, Illinois All rights reserved

(3C16) ELECTRICAL WIRING-STANDARD CAB
CABLES ELECTRIQUES-CABINE STANDARD
ELEKTRIK-STANDARD-KABINE
CAVI ELETTRICI-CABINA STANDARD
CABLES ELECTRICOS-CABINA STANDARD
ELEKTRISKA KABLAR-STANDARD FORARHYTT

KEY	PART NO.	PART NAME	QTY	SERIAL NO.	975	975HY/4	REMARKS
1	CA19448	CABLE	1		X	X	LGTH = 50 MM
2	CA20347	CABLE	1		X	X	LGTH = 1100 MM (SUB FOR CA19674)
3	CA20346	CABLE	1		X	X	LGTH = 1600 MM (ORD W/ CA20347) (SUB FOR CA19444)
4	CA19446	CABLE	1		X	X	LGTH = 700 MM
5	CA19970	WIRING HARNESS	1		X	X	LGTH = 1885 MM /3315 MM (SUB FOR CA19442)
6	CA19447	POWER CORD	1		X	X	LGTH = 415 MM
7	CA19445	WIRING LEAD	1		X	X	LGTH = 1200 MM
8	CA19443	POWER CORD	1		X	X	LGTH = 625 MM
9	Z21238	GROMMET	4		X	X	
10	DA19633	FUSE BOX	1		X	X	
11	37M7020	SCREW	2		X	X	M4,2 X 13
12	CA19681	FUSE	1		X	X	16A
13	99M7048	FUSE	1		X	X	8A (SUB FOR CA13048)
14	57M6511	BULB	1		X	X	
15	37M7020	SCREW	2		X	X	M4,2 X 13
16	DA19591	LAMP	1		X	X	ASSY

COPYRIGHT©1994 - 2008 DEERE & COMPANY Moline, Illinois All rights reserved

(3C25) ELECTRO CLUTCH - AIR CONDITIONED CAB
EMBRAYAGE ELCTROMAGNETIQUE - CABINE CLIMATISEE
ELEKTROKUPPLUNG - KABINE MIT KLIMAANLAGE
FRIZIONE ELETTROMAGNETICA - CABINA CONDIZIONATA
EMBRAGNE ELECTRONICO - CABINA CON AIRE ACONDICIONADO
ELEKTROKOPPLING - HYTT MED LUFTKONDITIONERING

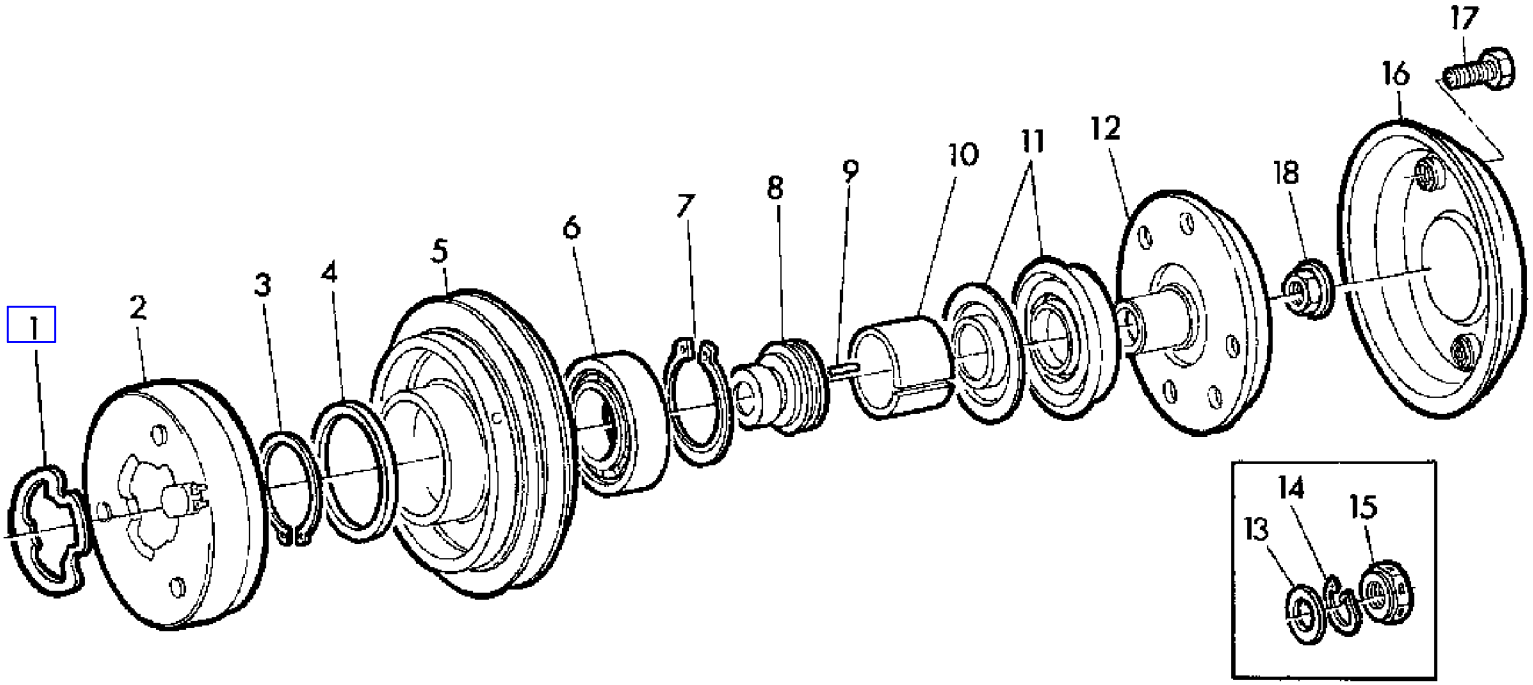

Z 104467

COPYRIGHT©1994 - 2008 DEERE & COMPANY Moline, Illinois All rights reserved

(3C25) ELECTRO CLUTCH - AIR CONDITIONED CAB
EMBRAYAGE ELCTROMAGNETIQUE - CABINE CLIMATISEE
ELEKTROKUPPLUNG - KABINE MIT KLIMAANLAGE
FRIZIONE ELETTROMAGNETICA - CABINA CONDIZIONATA
EMBRAGNE ELECTRONICO - CABINA CON AIRE ACONDICIONADO
ELEKTROKOPPLING - HYTT MED LUFTKONDITIONERING

KEY	PART NO.	PART NAME	QTY	SERIAL NO.	975	975HY/4	REMARKS
1	R56246	GASKET	1		X	X	(ORD W/ AR71289)
2	AR49803	ELECTRICAL COIL	1		X	X	(ORD W/ AR71289)
3	R47224	SNAP RING	1		X	X	(ORD W/ AR71289)
4	R54766	WASHER	1		X	X	(ORD W/ AR71289)
5	AR71287	PULLEY	1		X	X	ASSY, INCL KEYS 4,6,11
6	AR71288	BALL BEARING	1		X	X	
7	R47226	SNAP RING	1		X	X	(ORD W/ AR71289)
8	AR71285	KIT	1		X	X	KIT, INCL KEY 11
9	R47229	SHAFT KEY	1		X	X	
10	R47227	SEAL	1		X	X	(ORD W/ AR71289)
11	AR71289	SHIELD	1		X	X	
12	AR71286	CLUTCH	1		X	X	
13	R47230	WASHER	1		X	X	(FOR AR77343)
14	R47231	SNAP RING	1		X	X	(FOR AR77343)
15	R47232	NUT	1		X	X	(FOR AR77343)
16	AR71290	COVER	1		X	X	
17	37H32	SCREW	3		X	X	NO.10 X 3/8"
18	R69297	FLANGE NUT	1		X	X	

COPYRIGHT©1994 - 2008 DEERE & COMPANY Moline, Illinois All rights reserved

(1C01) ENGINE - MOUNTING PARTS
MOTEUR - ELEMENTS D'ADAPTION
MOTOR - ANBAUTEILE
MOTORE - PARTI MONTAGGIO
MOTOR - PIEZAS DE MONTAJE
MOTOR - MONTERINGSDELAR

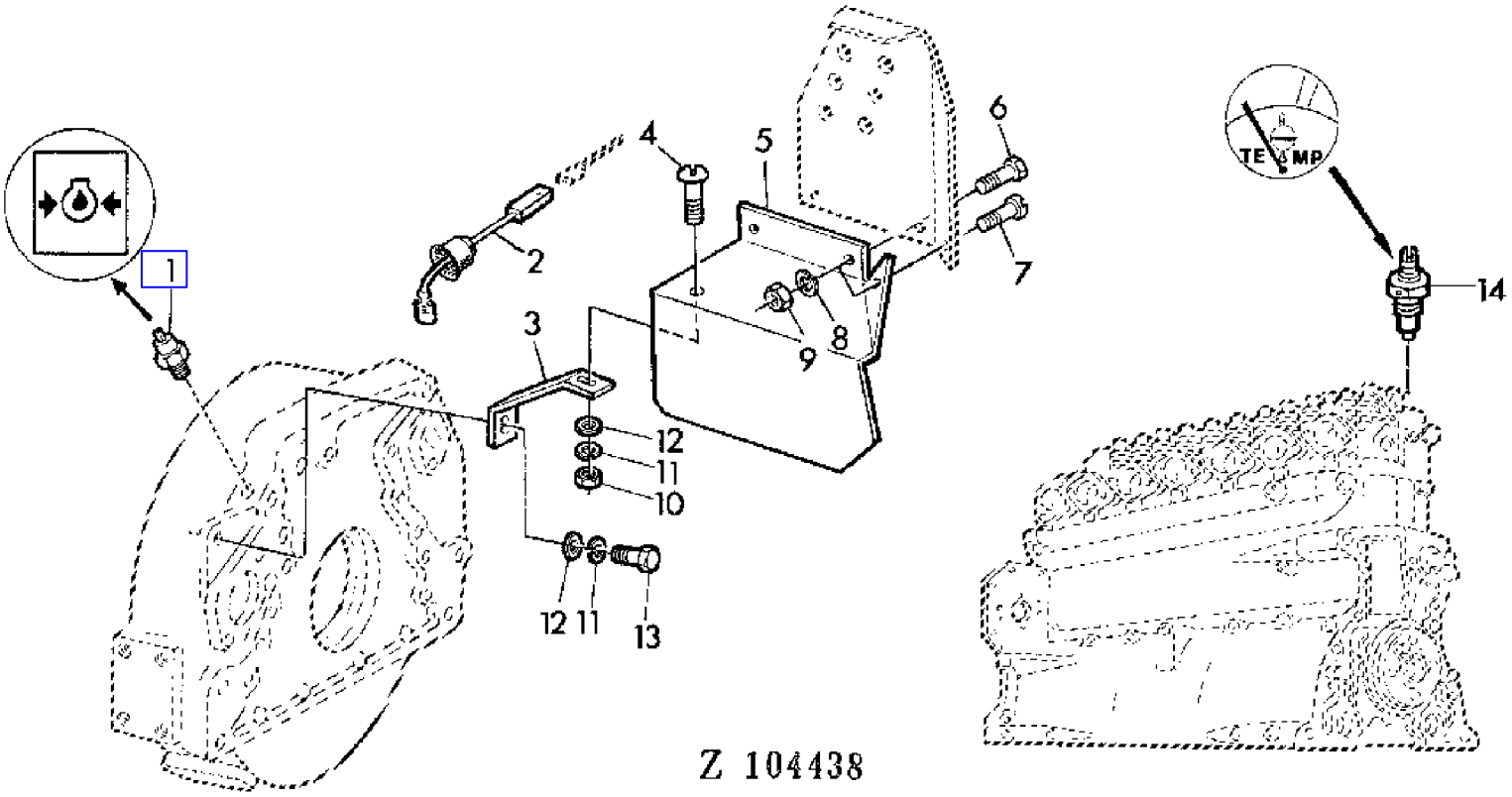

COPYRIGHT©1994 - 2008 DEERE & COMPANY Moline, Illinois All rights reserved

(1C01) ENGINE - MOUNTING PARTS
MOTEUR - ELEMENTS D'ADAPTION
MOTOR - ANBAUTEILE
MOTORE - PARTI MONTAGGIO
MOTOR - PIEZAS DE MONTAJE
MOTOR - MONTERINGSDELAR

KEY	PART NO.	PART NAME	QTY	SERIAL NO.	975	975HY/4	REMARKS
1	AR27977	TOUCH SWITCH	1		X	X	
2	AT30691	WIRING LEAD	1		X	X	
3	Z39929	HOLDER	1		X	X	
4	21M7162	SCREW	1		X	X	M10 X 20
5	Z39931	GUARD	1		X	X	
6	19M6614	CAP SCREW	2		X	X	M6 X 12
7	21M7087	SCREW	1		X	X	M6 X 12
8	12M7012	LOCK WASHER	3		X	X	6 MM
9	14M7027	NUT	3		X	X	M6
10	14M7140	NUT	1		X	X	M10
11	12M7013	LOCK WASHER	2		X	X	10 MM
12	24M7040	WASHER	2		X	X	11 MM
13	19H1936	CAP SCREW	1		X	X	3/8" X 3/4"
14	AZ35440	SENDER	1		X	X	(SUB FOR AZ26997)

COPYRIGHT©1994 - 2008 DEERE & COMPANY Moline, Illinois All rights reserved

(1C05) ENGINE BREATHER AND DRAINING ENGINE OIL
RENIFLARD ET TUYAU DE VIDANGE D'HUILE
MOTORENTLUEFTUNG UND OELABLASS
SFIATO MOTORE E TUBO DI SCARICO D'OLIO
RESPIRADERO DEL MOTOR Y TUBO DE VACIADO DEL ACEITE
MOTORVENTILATION OCH OLJEAVTAPPNING

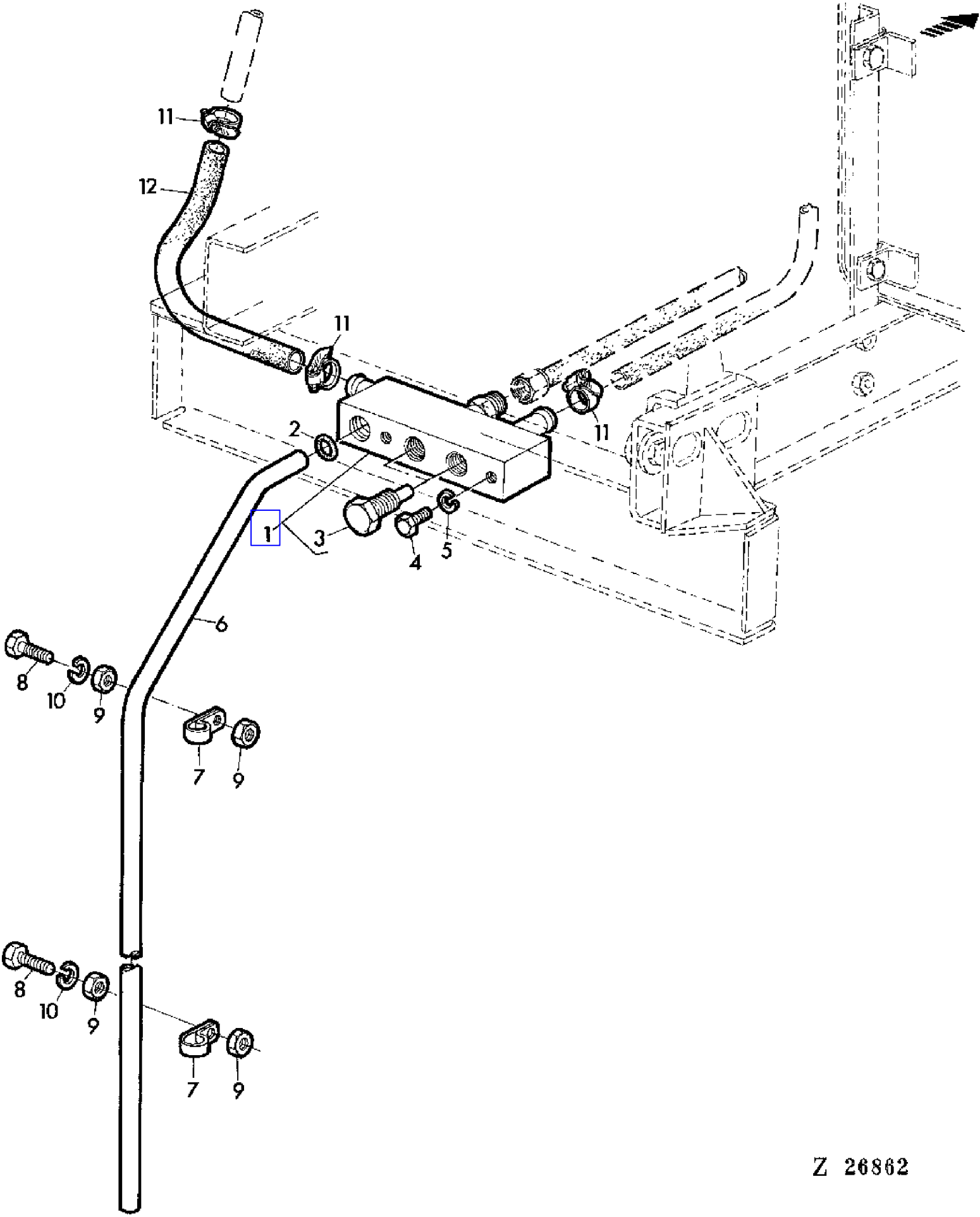

COPYRIGHT©1994 - 2008 DEERE & COMPANY Moline, Illinois All rights reserved

(1C05) ENGINE BREATHER AND DRAINING ENGINE OIL
RENIFLARD ET TUYAU DE VIDANGE D'HUILE
MOTORENTLUEFTUNG UND OELABLASS
SFIATO MOTORE E TUBO DI SCARICO D'OLIO
RESPIRADERO DEL MOTOR Y TUBO DE VACIADO DEL ACEITE
MOTORVENTILATION OCH OLJEAVTAPPNING

KEY	PART NO.	PART NAME	QTY	SERIAL NO.	975	975HY	REMARKS
1	AZ28480	CASE	1		X	X	ASSY, INCL KEY (2) 3
2	Z34562	O-RING	1		X	X	
3	Z34211	PLUG	2		X	X	
4	19M7376	CAP SCREW	1		X	X	M8 X 22
5	12M7008	LOCK WASHER	1		X	X	8 MM
6	Z34214	PIPE	1		X	X	
7	Z34215	CLAMP	2		X	X	
8	19M7168	CAP SCREW	2		X	X	M10 X 30
9	14M7140	NUT	4		X	X	M10
10	12M7013	LOCK WASHER	2		X	X	10 MM
11	Z26822	CLAMP	3		X	X	
12	Z34209	HOSE	1		X	X	

COPYRIGHT©1994 - 2008 DEERE & COMPANY Moline, Illinois All rights reserved

(1B14) ENGINE GASKET SET
JEU DE JOINTS MOTEUR
MOTOR-DICHTUNGSSATZ
SERIE GUARNIZIONI MOTORE
JUEGO DE JUNTAS PARA EL MOTOR
PACKNINGSSATS FOR MOTOR

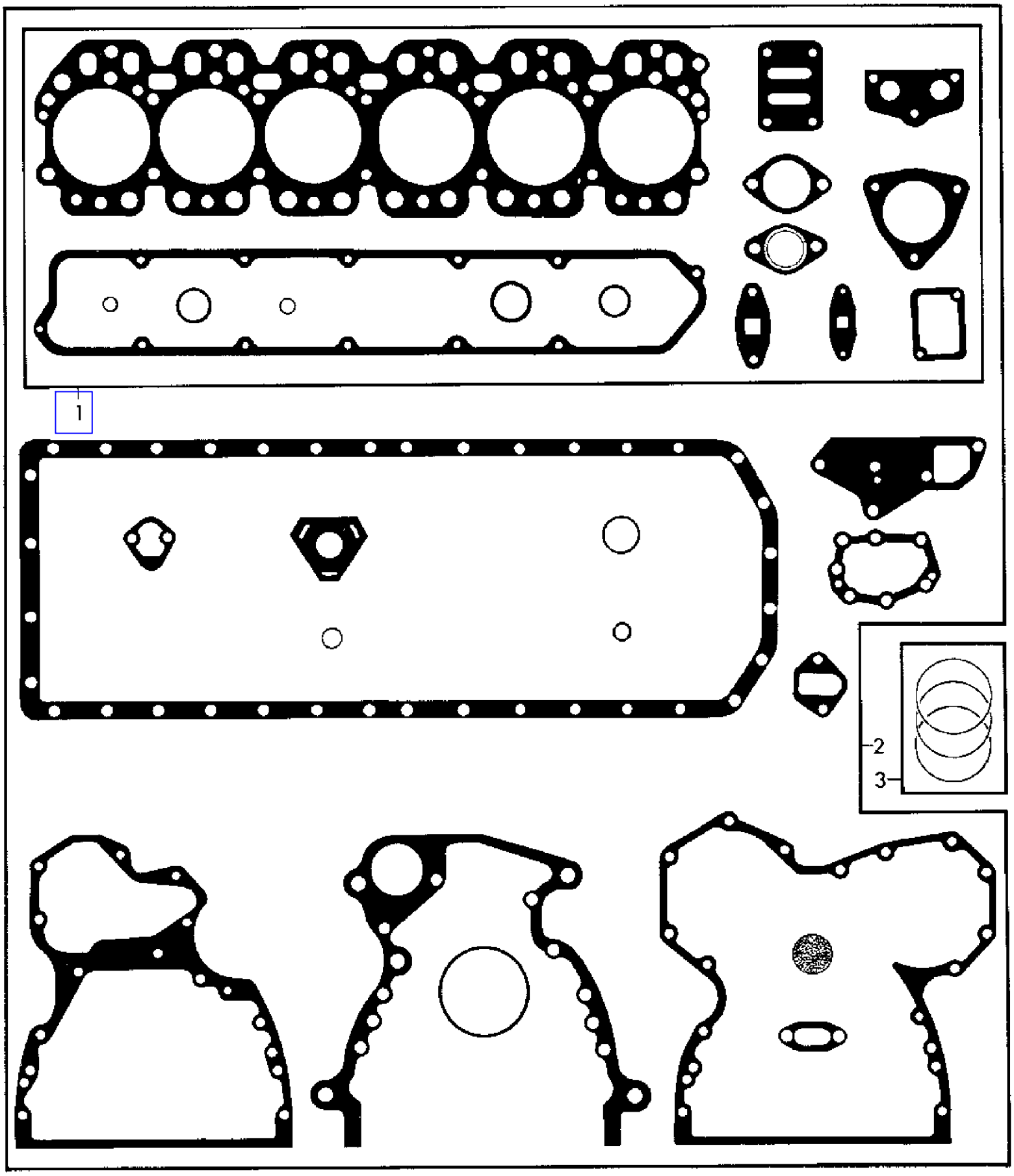

COPYRIGHT©1994 - 2008 DEERE & COMPANY Moline, Illinois All rights reserved

(1B14) ENGINE GASKET SET
JEU DE JOINTS MOTEUR
MOTOR-DICHTUNGSSATZ
SERIE GUARNIZIONI MOTORE
JUEGO DE JUNTAS PARA EL MOTOR
PACKNINGSSATS FOR MOTOR

KEY	PART NO.	PART NAME	QTY	SERIAL NO.	975	975HY/4	REMARKS
1	AR71994	GASKET KIT	AR		X	X	(ORD (12) AR100124, RE16924)
	RE16924	GASKET KIT	AR		X	X	(SUB FOR AR102267)
2	AR97786	GASKET KIT	AR		X	X	(ORD (12) AR100124, (6) AR65507, AR67942, RE11036, RE16925)
	RE16925	GASKET KIT	AR		X	X	KIT (ORD (6) AR65507, AR67942, RE11036) (SUB FOR AR102268)
3	AR65507	O-RING KIT	AR		X	X	KIT (3) (SUB FOR AR68318)

COPYRIGHT©1994 - 2008 DEERE & COMPANY Moline, Illinois All rights reserved

(1B05) ENGINE OIL COOLER
REFROIDISSEUR D'HUILE MOTEUR
MOTOR-OELKUEHLER
RAFFREDDATORE OLIO MOTORE
REFRIGERADOR DEL ACEITE DEL MOTOR
MOTOROLJEKYLARE

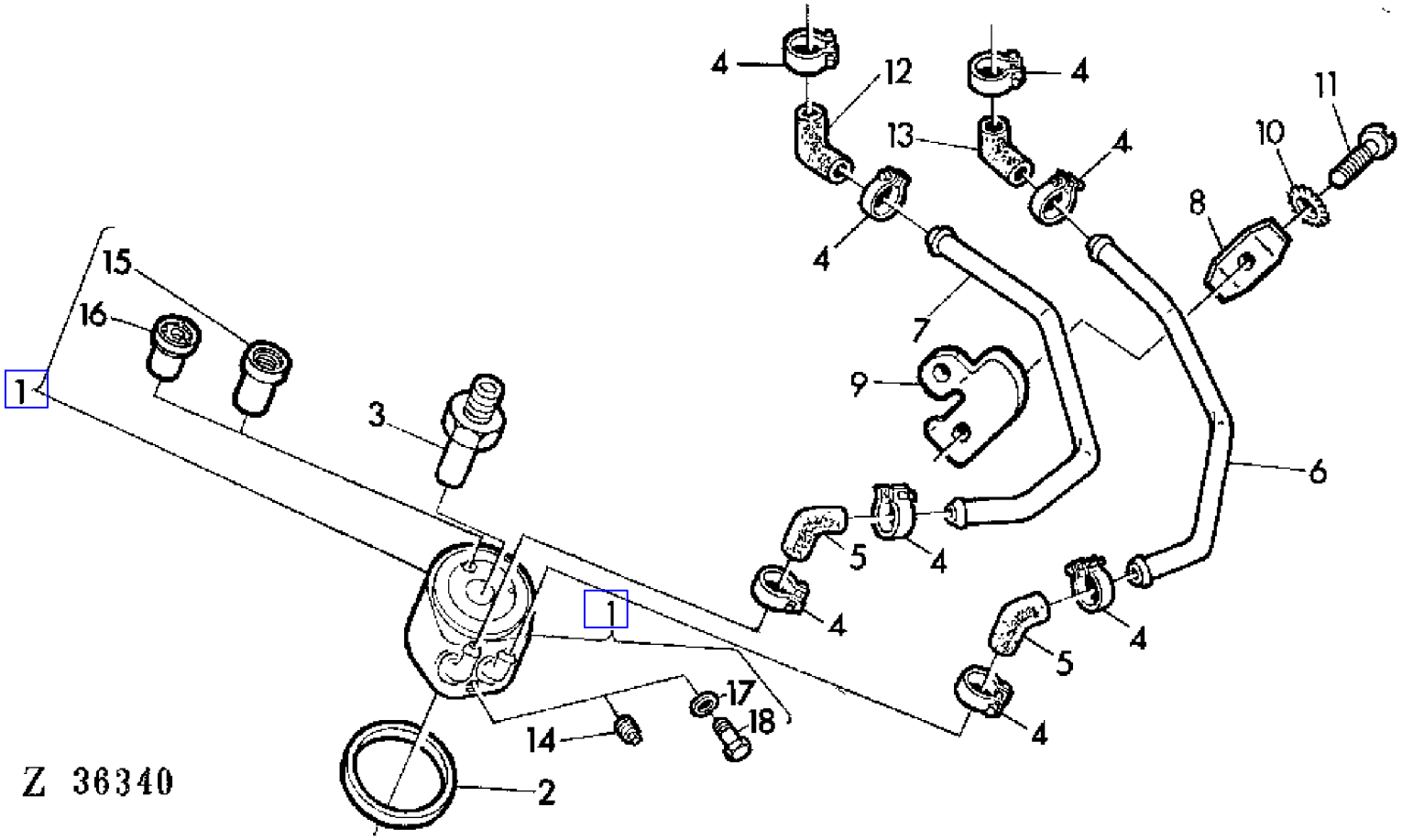

COPYRIGHT©1994 - 2008 DEERE & COMPANY Moline, Illinois All rights reserved

(1B05) ENGINE OIL COOLER
REFROIDISSEUR D'HUILE MOTEUR
MOTOR-OELKUEHLER
RAFFREDDATORE OLIO MOTORE
REFRIGERADOR DEL ACEITE DEL MOTOR
MOTOROLJEKYLARE

KEY	PART NO.	PART NAME	QTY	ENGINE SERIAL NO.	975	975HY/4	REMARKS
1	AR98852	OIL COOLER	AR	- 498385	X	X	ASSY, INCL KEYS 16-18, BEHR (ORD (2) AR21839, RE14448, R70956, R78290, (2) R79691) (SUB FOR AR64415)
2	R70956	WASHER	1	- 498385	X	X	(SUB FOR R55434)
3	T31306	THREADED NIPPLE	1	- 498385	X	X	
4	AR21837	CLAMP	8	- 498385	X	X	(SUB FOR T33112)
5	R55127	HOSE	2	- 498385	X	X	
6	R55126	PIPE	1	- 498385	X	X	
7	R55125	PIPE	1	- 498385	X	X	
8	R60203	CLAMP	1	- 498385	X	X	
9	R60204	CLAMP	1	- 498385	X	X	
10	12H295	LOCK WASHER	1	- 498385	X	X	NO.10
11	21H1312	SCREW	1	- 498385	X	X	NO.10 X 1"
12	T22942	HOSE	1	- 498385	X	X	
13	R48989	HOSE	1	- 498385	X	X	
14	R56947	DRAIN PLUG	1	- 498385	X	X	(W/ AR64415)
15	AT31093	VALVE	1	- 498385	X	X	(W/ AR64415)
16	AR98853	VALVE	1	- 498385	X	X	(W/ AR98852)
17	51M7012	RING	1	- 498385	X	X	(W/ AR98852) (SUB FOR CD15227)
18	15M2714	DRAIN PLUG	1	- 498385	X	X	(W/ AR98852)

COPYRIGHT©1994 - 2008 DEERE & COMPANY Moline, Illinois All rights reserved

(1B06) ENGINE OIL COOLER
REFROIDISSEUR D'HUILE MOTEUR
MOTOR-OELKUEHLER
DISPOSITIVO RAFFREDDAMENTO OLIO
REFRIGERADOR DEL ACEITE DEL MOTOR
MOTOROLJEKYLARE

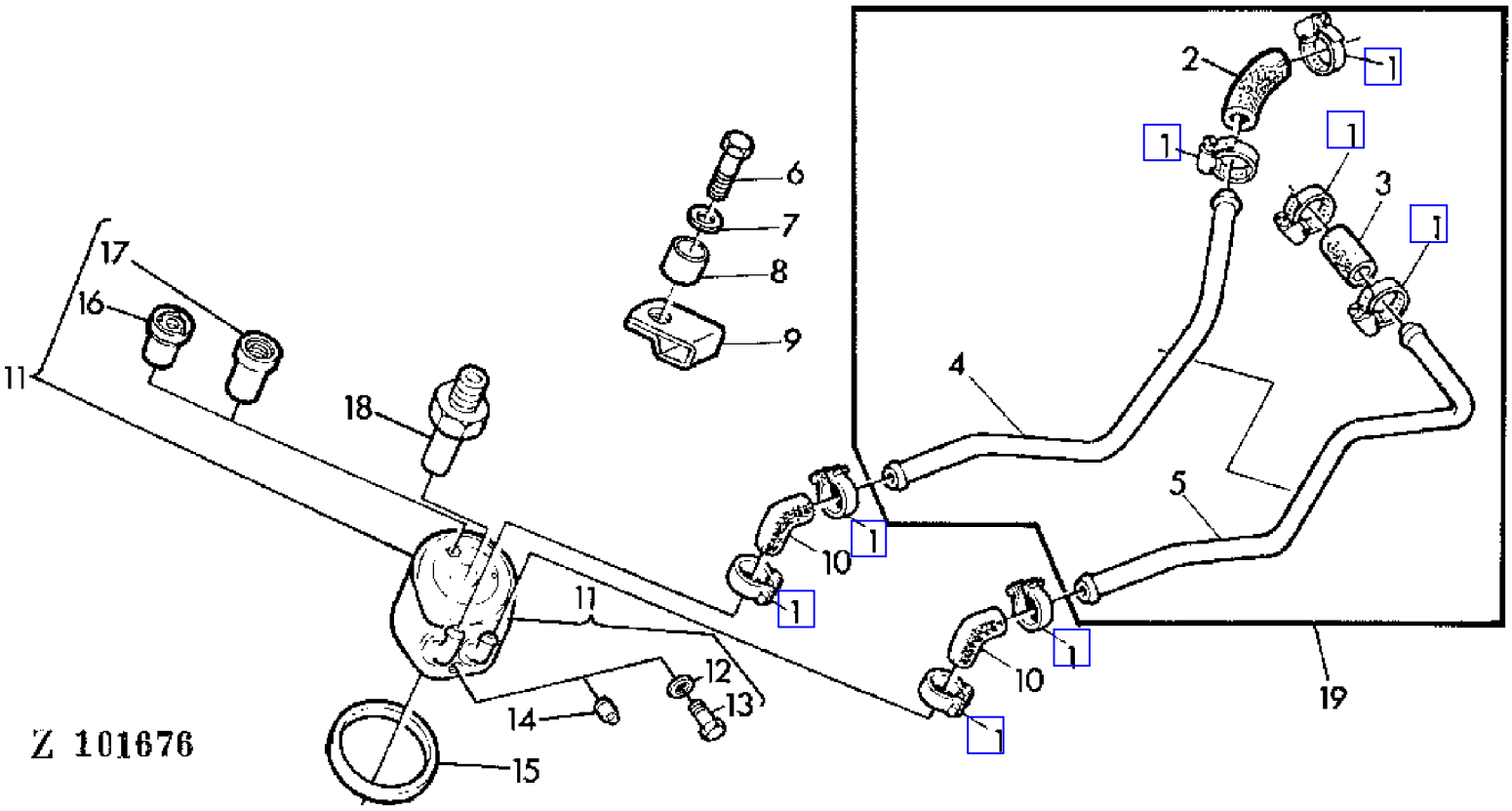

COPYRIGHT©1994 - 2008 DEERE & COMPANY Moline, Illinois All rights reserved

(1B06) ENGINE OIL COOLER
REFROIDISSEUR D'HUILE MOTEUR
MOTOR-OELKUEHLER
DISPOSITIVO RAFFREDDAMENTO OLIO
REFRIGERADOR DEL ACEITE DEL MOTOR
MOTOROLJEKYLARE

KEY	PART NO.	PART NAME	QTY	ENGINE SERIAL NO.			975	975HY/4	REMARKS
1	AR21837	CLAMP	8	498386	-	555320	X	X	
2	T61479	HOSE	1	498386	-	555320	X	X	NSEP, LGTH = 60 MM (ORD R83063)
3	.....	HOSE	1	498386	-	555320	X	X	LGTH = 60 MM (2.36") NSEP (ORD R83063) (SUB FOR R55401)
4	R73602	TUBE	1	498386	-	555320	X	X	
5	R73603	TUBE	1	498386	-	555320	X	X	
6	19H268	CAP SCREW	1	498386	-	555320	X	X	3/8" X 2-1/2"
7	24H1304	WASHER	1	498386	-	555320	X	X	13/32" X 23/32" X .120"
8	T20280	WASHER	1	498386	-	555320	X	X	
9	R53524	CLAMP	1	498386	-	555320	X	X	
10	R55127	HOSE	2	498386	-	555320	X	X	
11	AR98852	OIL COOLER	AR	498386	-	555320	X	X	ASSY, INCL KEYS 12,13,16, BEHR (ORD (2) R79691) (SUB FOR AR64415)
12	51M7012	RING	1	498386	-	555320	X	X	(W/ AR98852) (SUB FOR CD15227)
13	15M2714	DRAIN PLUG	1	498386	-	555320	X	X	(W/ AR98852)
14	R56947	DRAIN PLUG	1	498386	-	555320	X	X	(W/ AR64415)
15	R70956	WASHER	1	498386	-	555320	X	X	
16	AR98853	VALVE	1	498386	-	555320	X	X	(W/ AR98852)
17	AT31093	VALVE	1	498386	-	555320	X	X	(W/ AR64415)
18	T31306	THREADED NIPPLE	1	498386	-	555320	X	X	
19	AR103054	KIT	AR		-	498385	X	X	KIT, INCL KEYS 1-5
..	R83063	HOSE	AR	498386	-	555320	X	X	ID = 1677 MM (0.63) LGTH = 2370 MM (93.30")

COPYRIGHT©1994 - 2008 DEERE & COMPANY Moline, Illinois All rights reserved

(1B07) ENGINE OIL COOLER
REFROIDISSEUR D'HUILE MOTEUR
MOTOR-OELKUEHLER
DISPOSITIVO RAFFREDDAMENTO OLIO
REFRIGERADOR DEL ACEITE DEL MOTOR
MOTOROLJEKYLARE

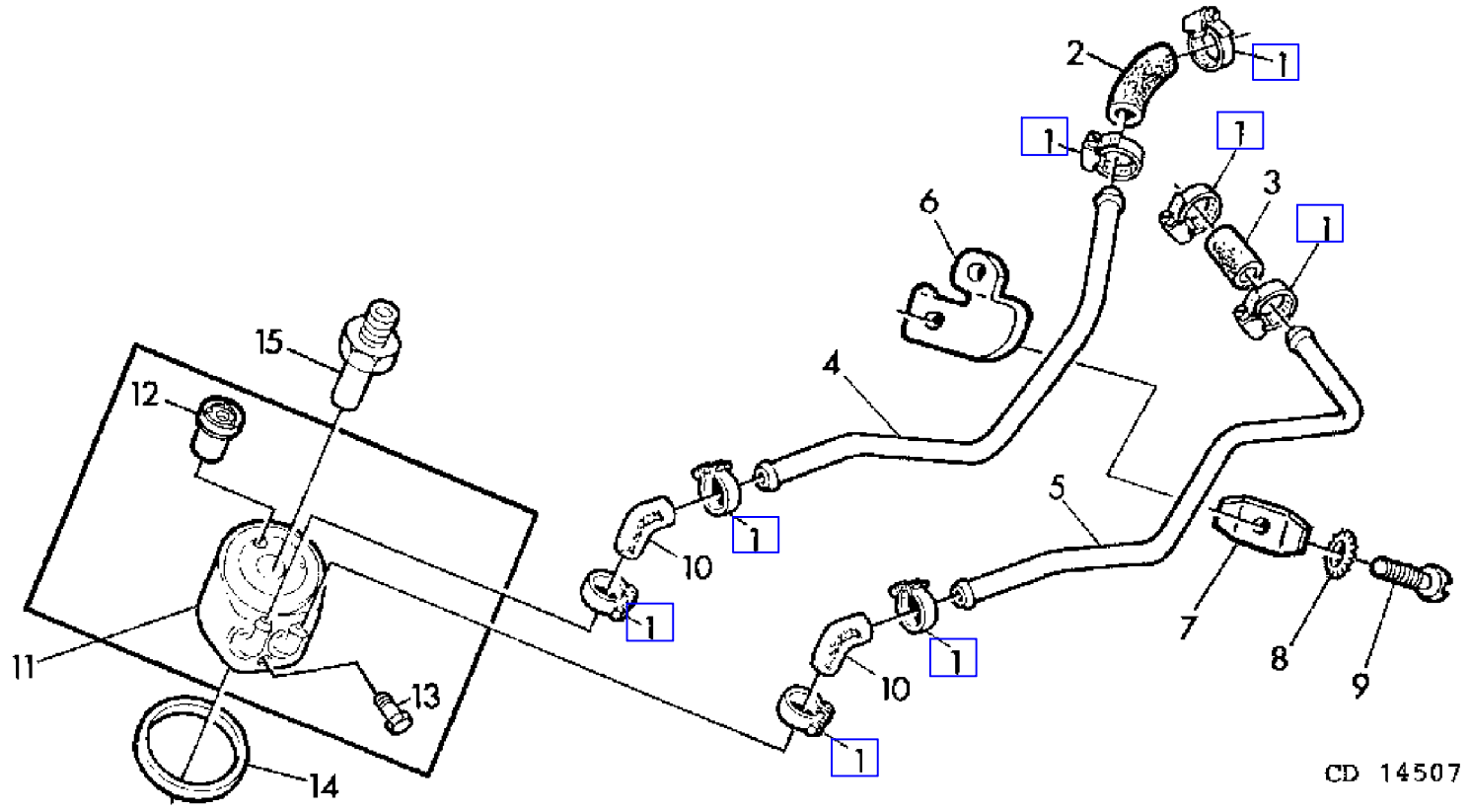

COPYRIGHT©1994 - 2008 DEERE & COMPANY Moline, Illinois All rights reserved

(1B07) ENGINE OIL COOLER
REFROIDISSEUR D'HUILE MOTEUR
MOTOR-OELKUEHLER
DISPOSITIVO RAFFREDDAMENTO OLIO
REFRIGERADOR DEL ACEITE DEL MOTOR
MOTOROLJEKYLARE

KEY	PART NO.	PART NAME	QTY	ENGINE SERIAL NO.		975	975HY/4	REMARKS
1	AR21839	CLAMP	8	555321	-	X	X	
2	R79175	HOSE	1	555321	-	X	X	LGHT = 89 MM (3.50")
3	T25469	HOSE	1	555321	-	X	X	
4	R79173	PIPE	1	555321	-	X	X	
5	R79174	PIPE	1	555321	-	X	X	
6	R60204	CLAMP	1	555321	-	X	X	
7	R60203	CLAMP	1	555321	-	X	X	
8	12H251	LOCK WASHER	1	555321	-	X	X	NO.10
9	21H1356	SCREW	1	555321	-	X	X	NO.10 X 1-1/4"
10	R54829	HOSE	2	555321	-	X	X	
11	RE14448	OIL COOLER	1	555321	-	X	X	
12	AR98853	VALVE	1	555321	-	X	X	
13	15M2714	DRAIN PLUG	1	555321	-	X	X	
14	R70956	WASHER	1	555321	-	X	X	
15	R78290	THREADED NIPPLE	1	555321	-	X	X	

COPYRIGHT©1994 - 2008 DEERE & COMPANY Moline, Illinois All rights reserved

(1B08) ENGINE OIL COOLER/INCREASED CAPACITY
REFROIDISSEUR D'HUILE MOTEUR/CAPACITE AUGMENTEE S
MOTOR-OELKUEHLER/GROESSERE KUEHLLEISTUNG
RADIATORE OLIO MOTORE(CAPACITA MAGGIORATA)
REFRIGERADOR DEL ACEITE DEL MOTOR/MAYOR CAPACIDAD
MOTOROLJEKYLARE(OKAD KAPACITET)

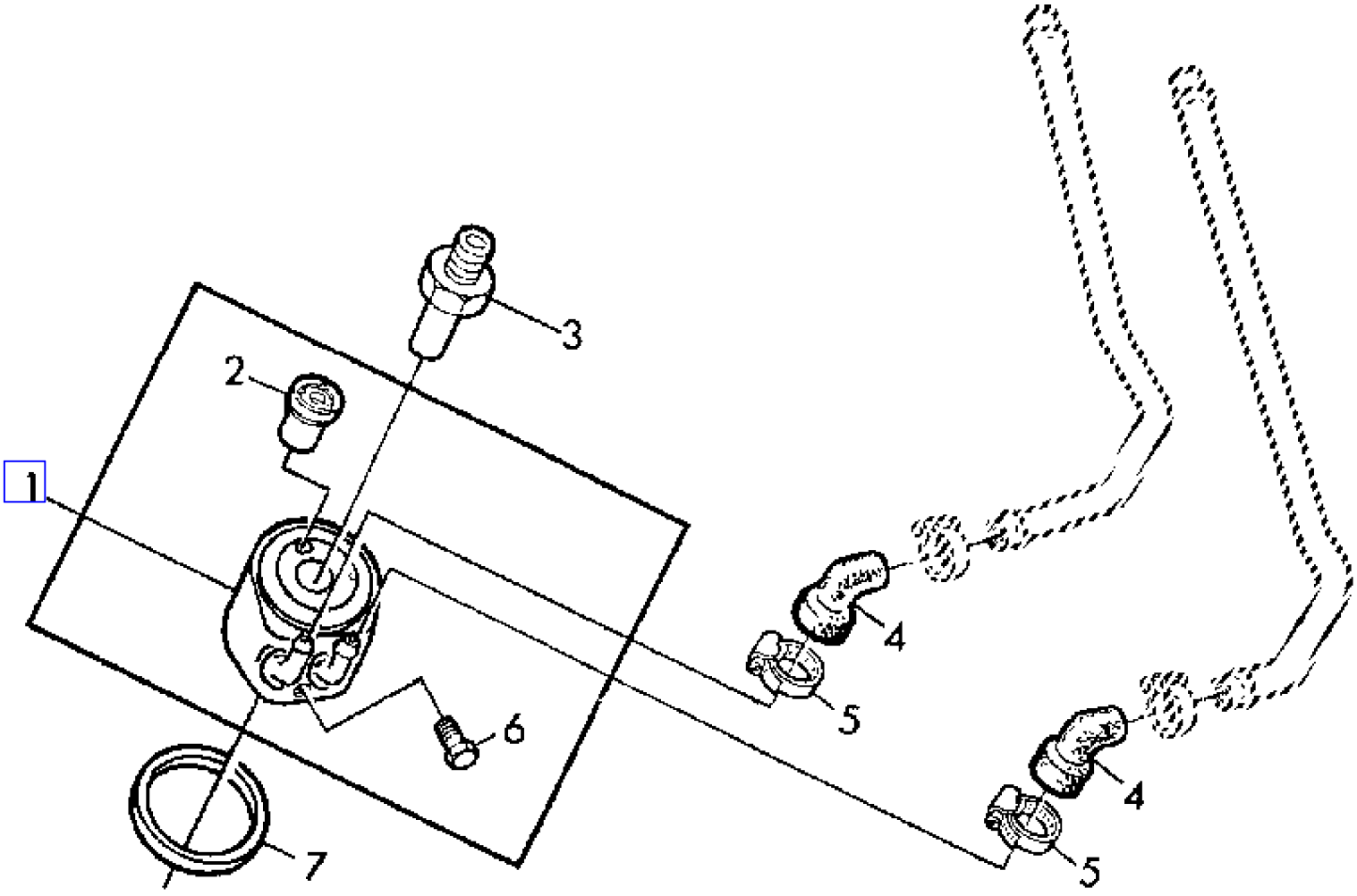

COPYRIGHT©1994 - 2008 DEERE & COMPANY Moline, Illinois All rights reserved

(1B08) ENGINE OIL COOLER/INCREASED CAPACITY
REFROIDISSEUR D'HUILE MOTEUR/CAPACITE AUGMENTEE S
MOTOR-OELKUEHLER/GROESSERE KUEHLLEISTUNG
RADIATORE OLIO MOTORE(CAPACITA MAGGIORATA)
REFRIGERADOR DEL ACEITE DEL MOTOR/MAYOR CAPACIDAD
MOTOROLJEKYLARE(OKAD KAPACITET)

KEY	PART NO.	PART NAME	QTY	ENGINE SERIAL NO.	975	975HY/4	REMARKS
1	RE14448	OIL COOLER	AR	- 555320	X	X	(ORD W/ KEYS 3-5,7)
2	AR98853	VALVE	1	- 555320	X	X	
3	R78290	THREADED NIPPLE	1	- 555320	X	X	
4	R79691	HOSE	2	- 555320	X	X	
5	AR21839	CLAMP	2	- 555320	X	X	
6	15M2714	DRAIN PLUG	1	- 555320	X	X	
7	R70956	WASHER	1	- 555320	X	X	

COPYRIGHT©1994 - 2008 DEERE & COMPANY Moline, Illinois All rights reserved

(1G02) ENGINE OIL TEMPERATURE GAUGE
THERMOMETRE HUILE MOTEUR
MOTOROELTEMPERATURANZEIGE
INDICATORE TEMPERATURA OLIO MOTORE
INDICADOR DE TEMPERATURA DEL ACEITE MOTOR
TEMPERATURMATARE FOR MOTOROLJE

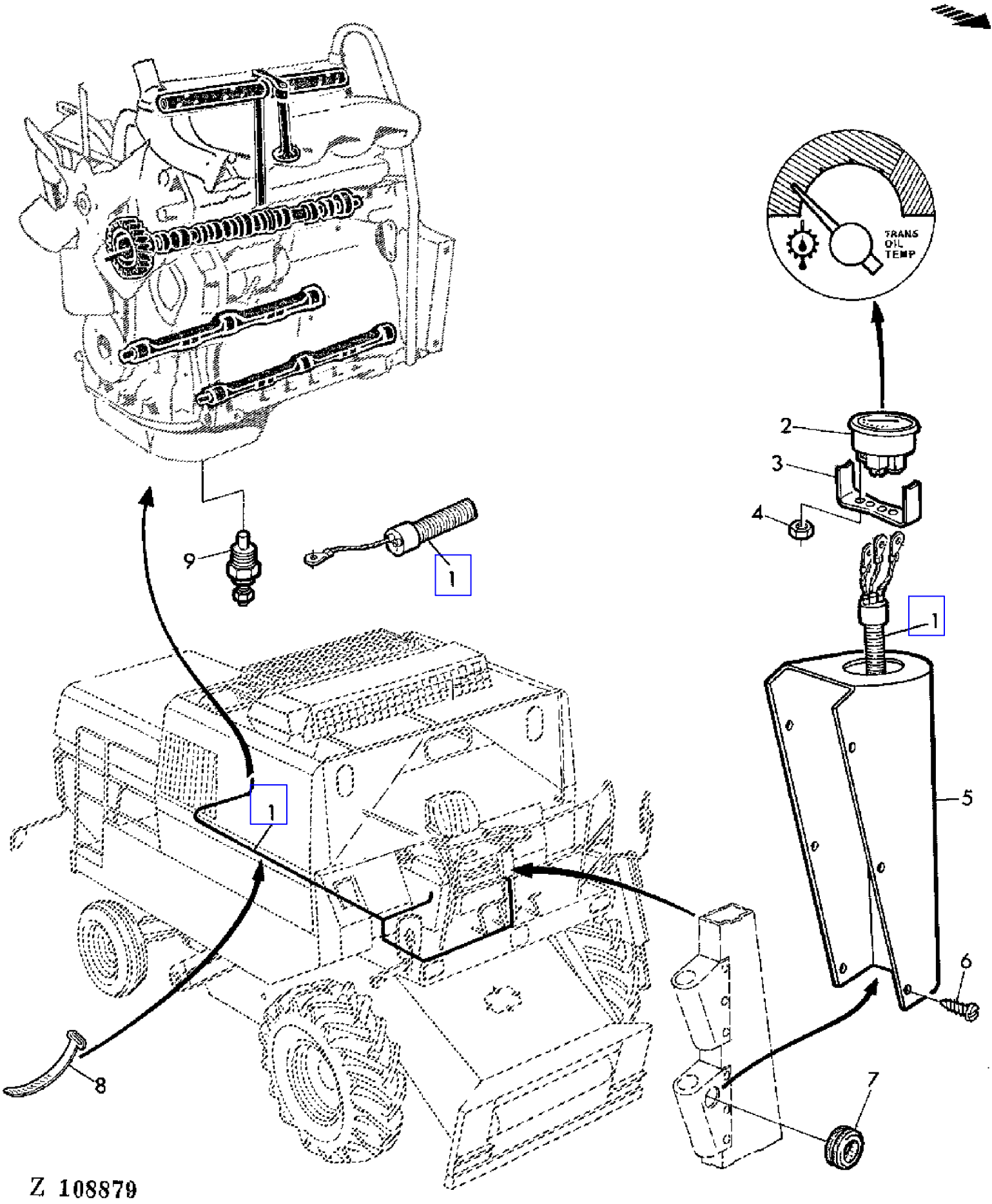

COPYRIGHT©1994 - 2008 DEERE & COMPANY Moline, Illinois All rights reserved

(1G02) ENGINE OIL TEMPERATURE GAUGE
THERMOMETRE HUILE MOTEUR
MOTOROELTEMPERATURANZEIGE
INDICATORE TEMPERATURA OLIO MOTORE
INDICADOR DE TEMPERATURA DEL ACEITE MOTOR
TEMPERATURMATARE FOR MOTOROLJE

KEY	PART NO.	PART NAME	QTY	SERIAL NO.	975	975HY/4	REMARKS
1	AZ35779	CABLE	1		X	X	
2	AT66705	GAUGE	1		X	X	
3	T39395	BRACKET	1		X	X	
4	R32176	NUT	2		X	X	
5	Z41947	CASE	1		X	X	
6	37M7011	SCREW	AR		X	X	4,8 X 9,5 MM
7	Z34506	GROMMET	1		X	X	
8	R44302	TIE BAND	AR		X	X	
9	AT37368	SENDER	1		X	X	

COPYRIGHT©1994 - 2008 DEERE & COMPANY Moline, Illinois All rights reserved

(1C07) ENGINE SUPPORT
SUPPORT MOTEUR
MOTORTRAEGER
SUPPORTO MOTORE
SOPORTE DEL MOTOR
MOTORFAESTE

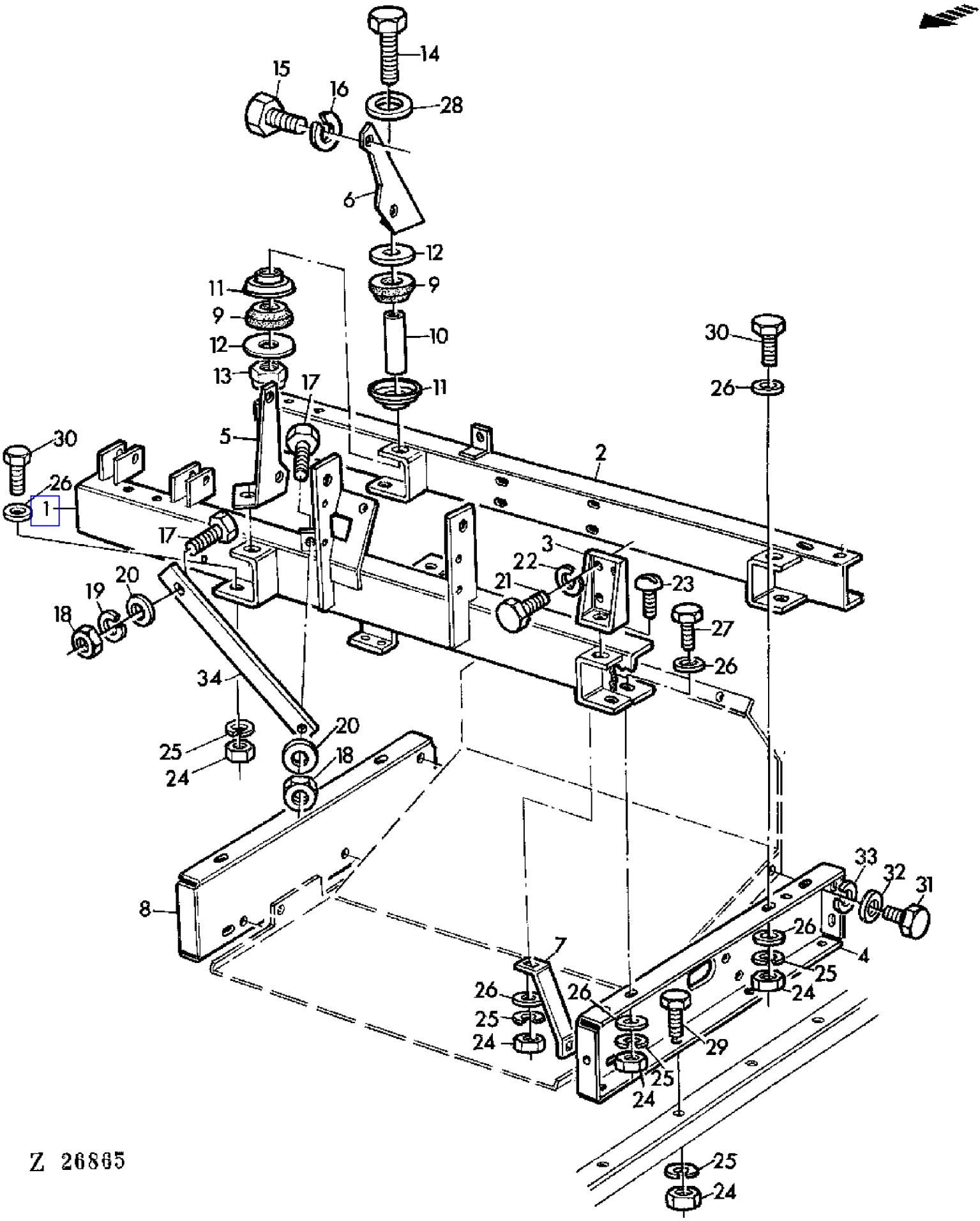

COPYRIGHT©1994 - 2008 DEERE & COMPANY Moline, Illinois All rights reserved

(1C07) ENGINE SUPPORT
SUPPORT MOTEUR
MOTORTRAEGER
SUPPORTO MOTORE
SOPORTE DEL MOTOR
MOTORFAESTE

KEY	PART NO.	PART NAME	QTY	SERIAL NO.	975	975HY/4	REMARKS
1	AZ23033	SUPPORT	1		X		
2	AZ23032	SUPPORT	1		X		
3	AZ23031	HOLDER	2		X		
4	Z34163	HOLDER	1		X		LH
5	Z34167	SUPPORT	1		X		
6	Z34168	SUPPORT	1		X		
7	Z34179	HOLDER	2		X		
8	Z34833	HOLDER	1		X		RH
9	H80197	BUSHING	8		X		
10	H34482	SPACER	4		X		
11	H78856	RETAINER	8		X		
12	P50456	WASHER	8		X		
13	14M7170	LOCK NUT	4		X		M16
14	19M7399	CAP SCREW	4		X		M16 X 85
15	19H1833	CAP SCREW	4		X		5/8" X 1-1/4"
16	12H294	LOCK WASHER	4		X		5/8"
17	19M7163	CAP SCREW	2		X		M8 X 25
18	14M7029	NUT	2		X		M8
19	12M7008	LOCK WASHER	2		X		8 MM
20	24M7036	WASHER	2		X		9 MM
21	19H1815	CAP SCREW	8		X		1/2" X 1-1/4"
22	12H301	LOCK WASHER	8		X		1/2"
23	03M7085	BOLT	4		X		M10 X 30
24	14M7140	NUT	6		X		M10
25	12M7013	LOCK WASHER	6		X		10 MM
26	L19008	WASHER	6		X		
27	19M7169	CAP SCREW	6		X		M10 X 35
28	24M7048	WASHER	2		X		16 MM
29	19M7167	CAP SCREW	AR		X		M10 X 25
30	19M7168	CAP SCREW	5		X		M10 X 30
31	19M7375	CAP SCREW	6		X		M6 X 18
32	24M7088	WASHER	6		X		6,6 MM
33	12M7012	LOCK WASHER	6		X		6MM
34	Z34785	STRAP	2		X		

COPYRIGHT©1994 - 2008 DEERE & COMPANY Moline, Illinois All rights reserved

(1C09) ENGINE SUPPORT
SUPPORT MOTEUR
MOTORTRAEGER
SUPPORTO MOTORE
SOPORTE DEL MOTOR
MOTORFASTE

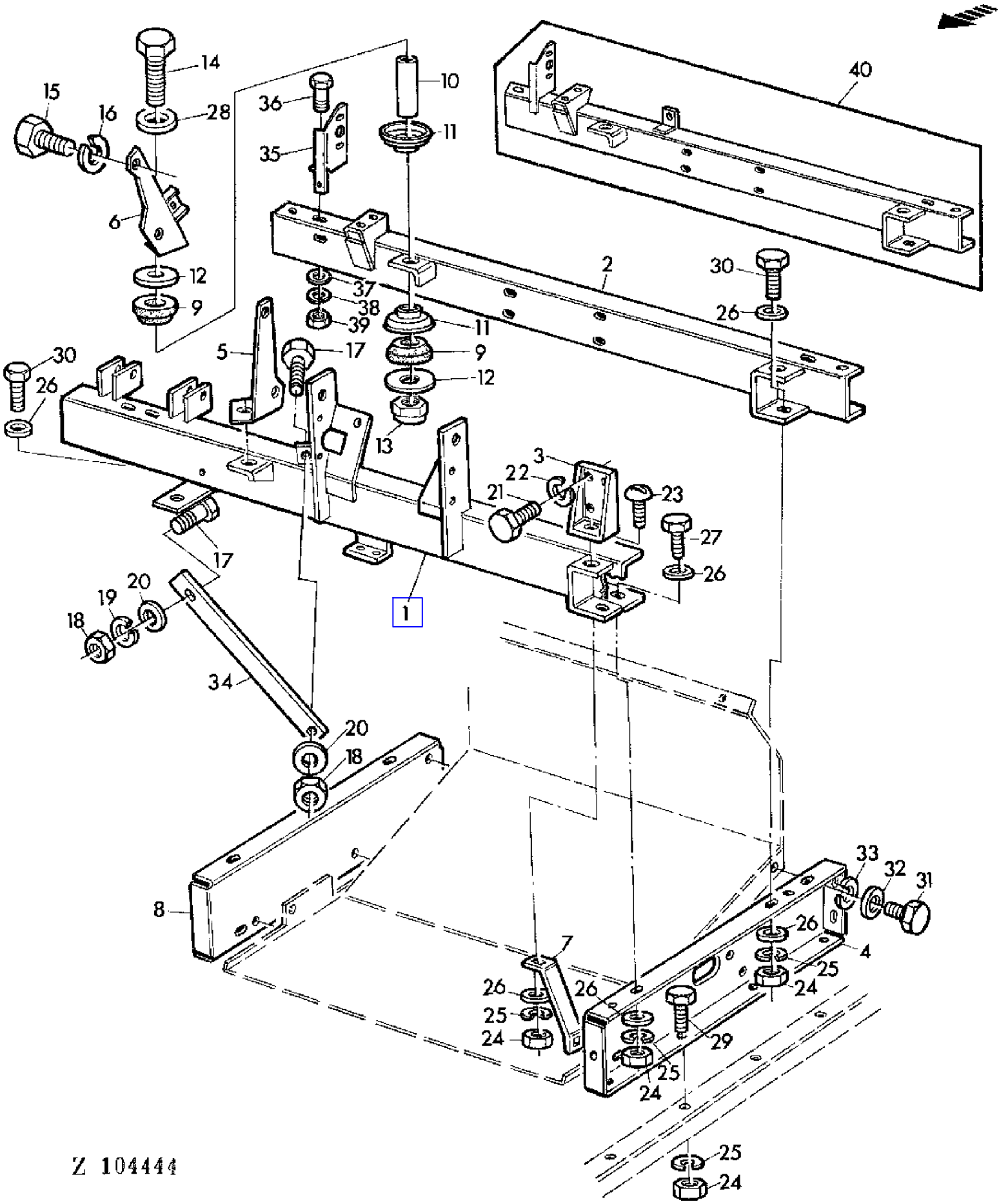

COPYRIGHT©1994 - 2008 DEERE & COMPANY Moline, Illinois All rights reserved

(1C09) ENGINE SUPPORT
SUPPORT MOTEUR
MOTORTRAEGER
SUPPORTO MOTORE
SOPORTE DEL MOTOR
MOTORFASTE

KEY	PART NO.	PART NAME	QTY	SERIAL NO.	975	975HY/4	REMARKS
1	AZ33695	SUPPORT	1			X	(SUB FOR AZ26146)
2	AZ31346	SUPPORT	1			X	(SUB FOR AZ26147)
3	AZ23031	HOLDER	2			X	
4	Z34163	HOLDER	1			X	LH
5	Z34167	SUPPORT	1			X	
6	AZ27272	SUPPORT	1			X	
7	Z34179	HOLDER	2			X	
8	Z34833	HOLDER	1			X	RH
9	H80197	BUSHING	8			X	
10	H34482	SPACER	4			X	
11	H78856	RETAINER	8			X	
12	P50456	WASHER	8			X	
13	14M7170	LOCK NUT	4			X	M16
14	19M7399	CAP SCREW	4			X	M16 X 85
15	19H1833	CAP SCREW	4			X	5/8" X 1-1/4"
16	12H294	LOCK WASHER	4			X	5/8"
17	19M7163	CAP SCREW	2			X	8 X 25 MM
18	14M7029	NUT	2			X	M8
19	12M7008	LOCK WASHER	2			X	8 MM
20	24M7036	WASHER	2			X	9 MM
21	19H1815	CAP SCREW	8			X	1/2" X 1-1/4"
22	12H301	LOCK WASHER	8			X	1/2"
23	03M7085	BOLT	4			X	M10 X 30
24	14M7140	NUT	6			X	M10
25	12M7013	LOCK WASHER	6			X	10 MM
26	L19008	WASHER	6			X	
27	19M7169	CAP SCREW	6			X	M10 X 35
28	24M7048	WASHER	2			X	16 MM
29	19M7167	CAP SCREW	AR			X	M10 X 25
30	19M7168	CAP SCREW	5			X	M10 X 30
31	19M7375	CAP SCREW	6			X	M6 X 18
32	24M7088	WASHER	6			X	6,6 MM
33	12M7012	LOCK WASHER	6			X	6 MM
34	Z34785	STRAP	2			X	
35	Z41725	RETAINER	1			X	
36	19M7381	CAP SCREW	3			X	M10 X 28
37	24M7043	WASHER	3			X	12 MM
38	12M7013	LOCK WASHER	3			X	10 MM
39	14M7140	NUT	3			X	M10
40	AZ26147	SUPPORT	1			X	(ORD AZ31346 W/ Z41725, KEYS (3) 36-39)

COPYRIGHT©1994 - 2008 DEERE & COMPANY Moline, Illinois All rights reserved

(1D03) EXHAUST
SILENCIEUX
SCHALLDAEMPFER
SILENZIATORE
SILENCIADOR
LJUDDAMPARE

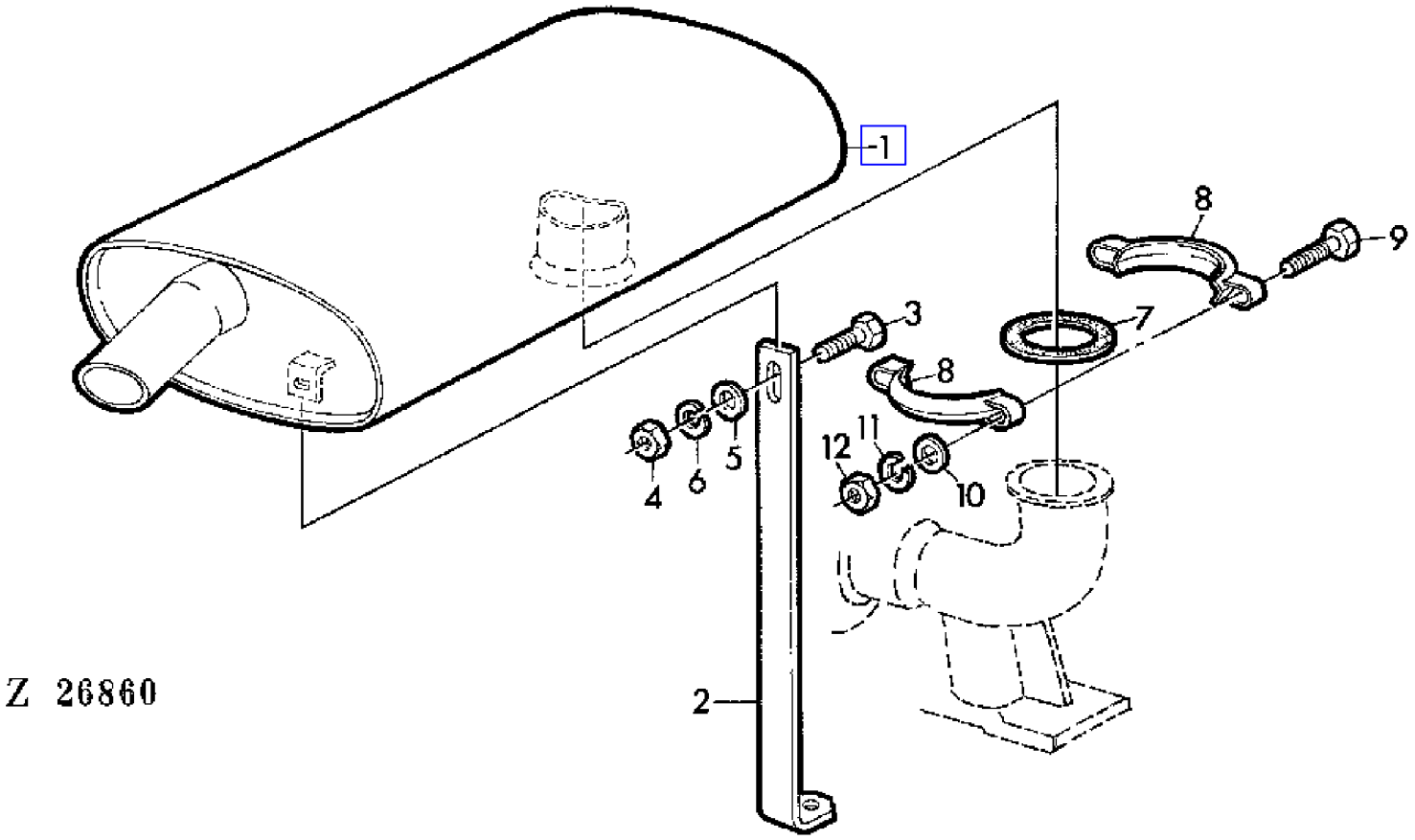

COPYRIGHT©1994 - 2008 DEERE & COMPANY Moline, Illinois All rights reserved

(1D03) EXHAUST
SILENCIEUX
SCHALLDAEMPFER
SILENZIATORE
SILENCIADOR
LJUDDAMPARE

KEY	PART NO.	PART NAME	QTY	SERIAL NO.	975	975HY/4	REMARKS
1	AZ23821	MUFFLER	1	- 015187	X		
2	Z34756	SUPPORT	1	- 015187	X		
3	19M7163	CAP SCREW	1		X		M8 X 25
4	14M7029	NUT	1		X		M8
5	24M7036	WASHER	1		X		9 MM
6	12M7008	LOCK WASHER	1		X		8 MM
7	R31142	SEALING WASHER	1		X		
8	AT29268	CLAMP	2		X		
9	19M7327	CAP SCREW	2		X		M10 X 65
10	24M7040	WASHER	2		X		11 MM
11	12M7013	LOCK WASHER	2		X		10 MM
12	14M7140	NUT	2		X		M10

COPYRIGHT©1994 - 2008 DEERE & COMPANY Moline, Illinois All rights reserved

(1C24) EXHAUST MANIFOLD
COLLECTEUR D'ECHAPPEMENT
AUSPUFFKRUEMMER
COLLETTORE DI SCARICO
COLECTOR DE ESCAPE
AVGASGRENROR

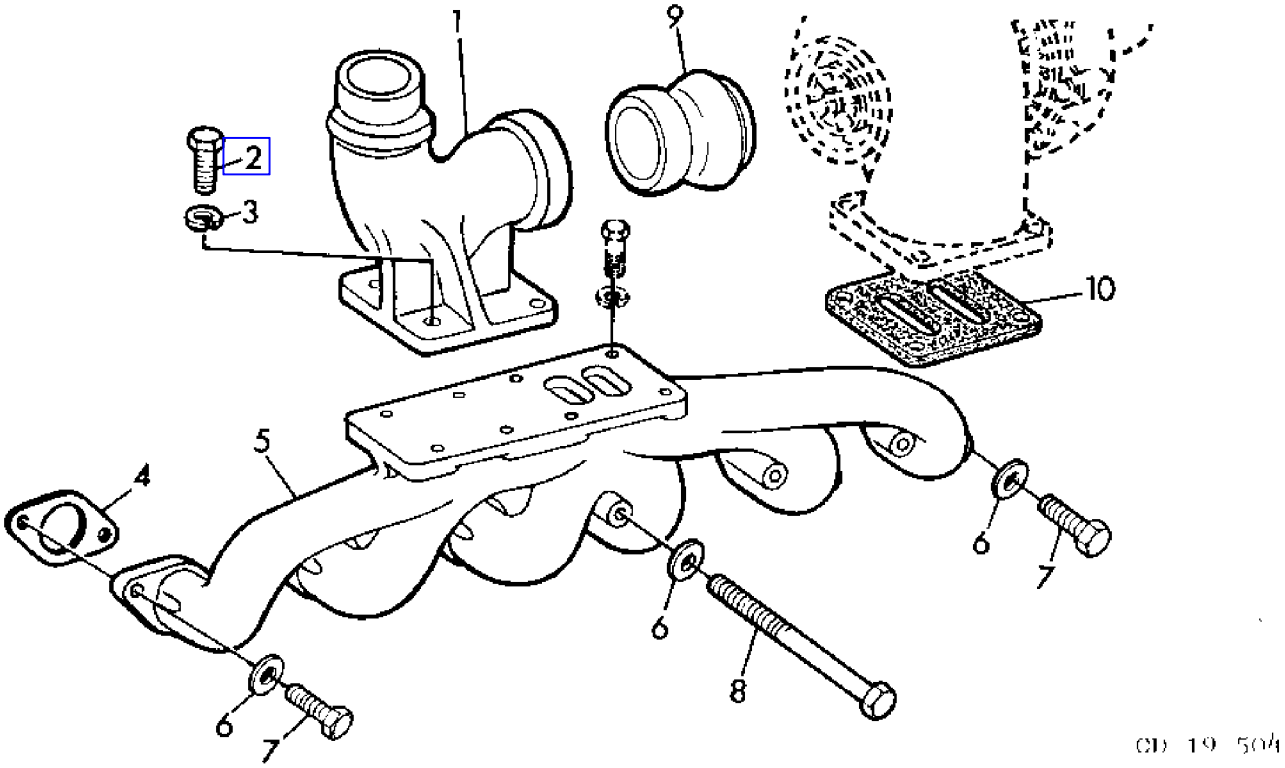

COPYRIGHT©1994 - 2008 DEERE & COMPANY Moline, Illinois All rights reserved

(1C24) EXHAUST MANIFOLD
COLLECTEUR D'ECHAPPEMENT
AUSPUFFKRUEMMER
COLLETTORE DI SCARICO
COLECTOR DE ESCAPE
AVGASGRENROR

KEY	PART NO.	PART NAME	QTY	SERIAL NO.	975	975HY	REMARKS
1	R66719	ELBOW FITTING	1		X	X	(SUB FOR R48814)
2	19H2552	CAP SCREW	4		X	X	3/8" X 1-1/8"
3	12H304	LOCK WASHER	4		X	X	3/8"
4	T20006	GASKET	6		X	X	
5	T30818	EXHAUST MANIFOLD	1		X	X	
6	24H1303	WASHER	12		X	X	13/32" X 11/16" X 0.060" (SUB FOR 24H1305)
7	19H988	CAP SCREW	9		X	X	3/8" X 1-1/4"
8	19H1912	CAP SCREW	3		X	X	3/8" X 3-1/2"
9	R51736	ADAPTER	1		X	X	
10	R55509	GASKET	1		X	X	

COPYRIGHT©1994 - 2008 DEERE & COMPANY Moline, Illinois All rights reserved

(1B16) FAN DRIVE COUNTERSHAFT
ARBRE DE RENVOI DU VENTILATEUR
VORGELEGE FUER LUEFTERANTRIEB
ALBERO RINVIO VENTILATORE
CONJUNTO INTERMEDIO PARA EL ACCION.DEL VENTILADOR
MELLANDREN FOR FLAKT

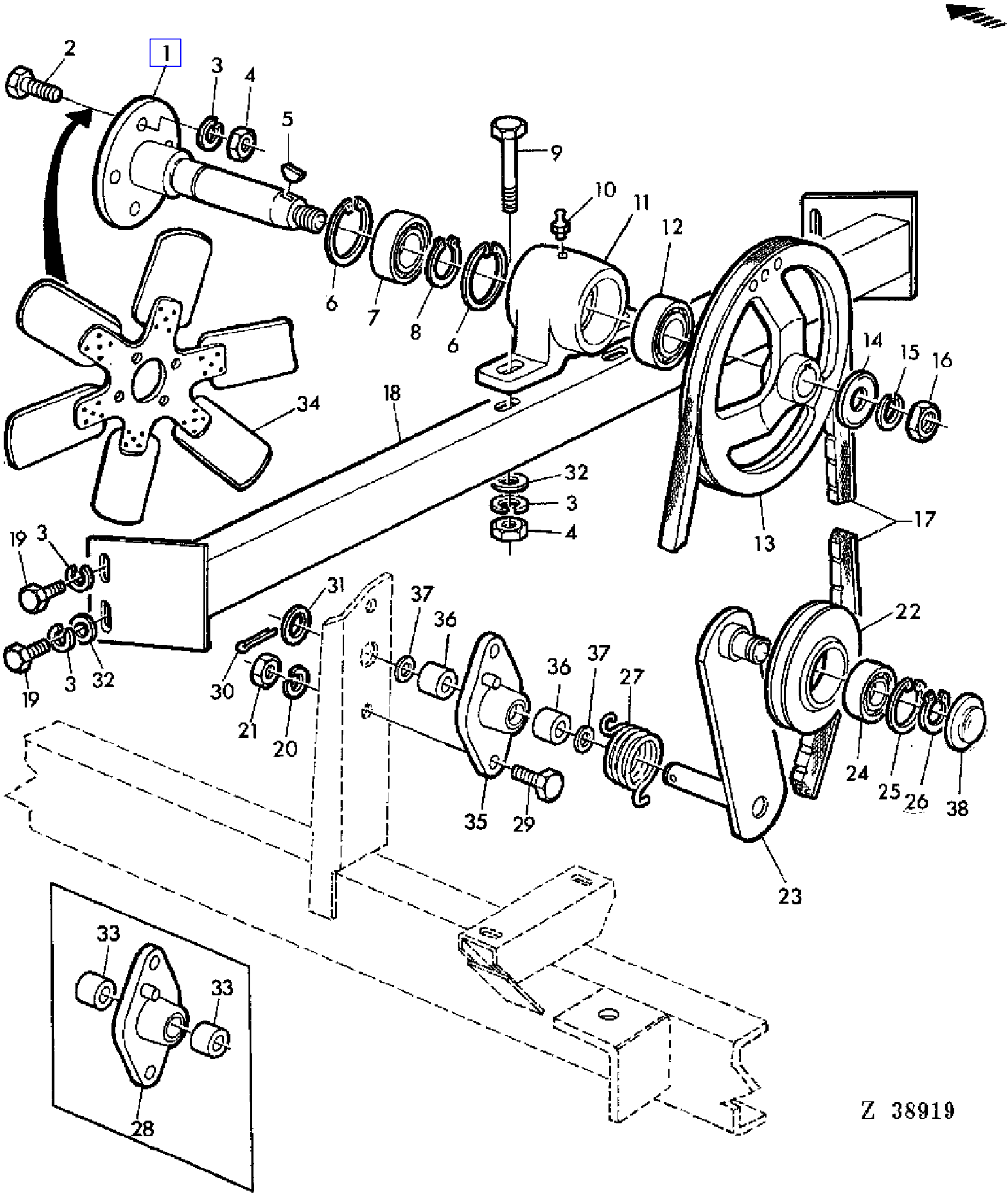

COPYRIGHT©1994 - 2008 DEERE & COMPANY Moline, Illinois All rights reserved

(1B16) FAN DRIVE COUNTERSHAFT
ARBRE DE RENVOI DU VENTILATEUR
VORGELEGE FUER LUEFTERANTRIEB
ALBERO RINVIO VENTILATORE
CONJUNTO INTERMEDIO PARA EL ACCION.DEL VENTILADOR
MELLANDREN FOR FLAKT

KEY	PART NO.	PART NAME	QTY	SERIAL NO.	975	975HY/4	REMARKS
1	AZ27690	SPINDLE	1			X	
2	19M7381	CAP SCREW	4			X	M10 X 28
3	12M7013	LOCK WASHER	AR			X	10 MM
4	14M7140	NUT	AR			X	M10
5	26M4226	SHAFT KEY	1			X	5 X 7,5 MM
6	40M1865	SNAP RING	2			X	52 X 2 MM
7	JD30028	BALL BEARING	1			X	
8	40M1828	SNAP RING	1			X	25 X 1,2 MM
9	19M7385	CAP SCREW	2			X	M10 X 70
10	58M7004	LUBRICATION FITTING	1			X	6 X 1 MM
11	Z11189	HOUSING	1			X	
12	JD10044	BALL BEARING	1			X	
13	Z11190	PULLEY	1			X	
14	Z26244	WASHER	1			X	
15	12M7014	LOCK WASHER	1			X	12 MM
16	14M7031	NUT	1			X	M12
17	Z38149	BELT	1			X	LGTH = 1390 MM
18	AZ27689	SUPPORT	1			X	
19	19M7167	CAP SCREW	4			X	M10 X 25
20	12M7008	LOCK WASHER	AR			X	8 MM
21	14M7029	NUT	AR			X	M8
22	Z11188	IDLER	1			X	
23	AZ27274	PIVOT	1			X	
24	JD30071	BALL BEARING	1			X	
25	40M1863	SNAP RING	1			X	47 X 1,75 MM
26	40M1825	SNAP RING	1			X	20 X 1,2 MM
27	H86265	TORSION SPRING	1			X	
28	AZ27271	HOLDER	1	- 023492		X	(ORD AZ29042)
29	19M7163	CAP SCREW	2			X	M8 X 25
30	11M7021	COTTER PIN	1			X	4 X 25 MM
31	24M7113	WASHER	1			X	17 MM
32	24M7040	WASHER	AR			X	11 MM
33	Z38138	SPACER	2	- 023492		X	
34	AH87532	FAN	1			X	
35	AZ29042	FLANGE	1	023493 -		X	INCL KEYS 36,37 (SUB FOR AZ27271)
36	Z39563	BUSHING	2	023493 -		X	
37	Z39564	FELT	2	023493 -		X	
38	30M7002	PLUG	1			X	

COPYRIGHT©1994 - 2008 DEERE & COMPANY Moline, Illinois All rights reserved

(1B18) FAN DRIVE COUNTERSHAFT
ARBRE DE RENVOI DU VENTILATEUR
VORGELEGE FUER LUEFTERANTRIEB
ALBERO RINVIO VENTILATORE
CONJUNTO INTERMEDIO PARA EL ACCION.DEL VENTILADOR
MELLANDREN FOR FLAKT

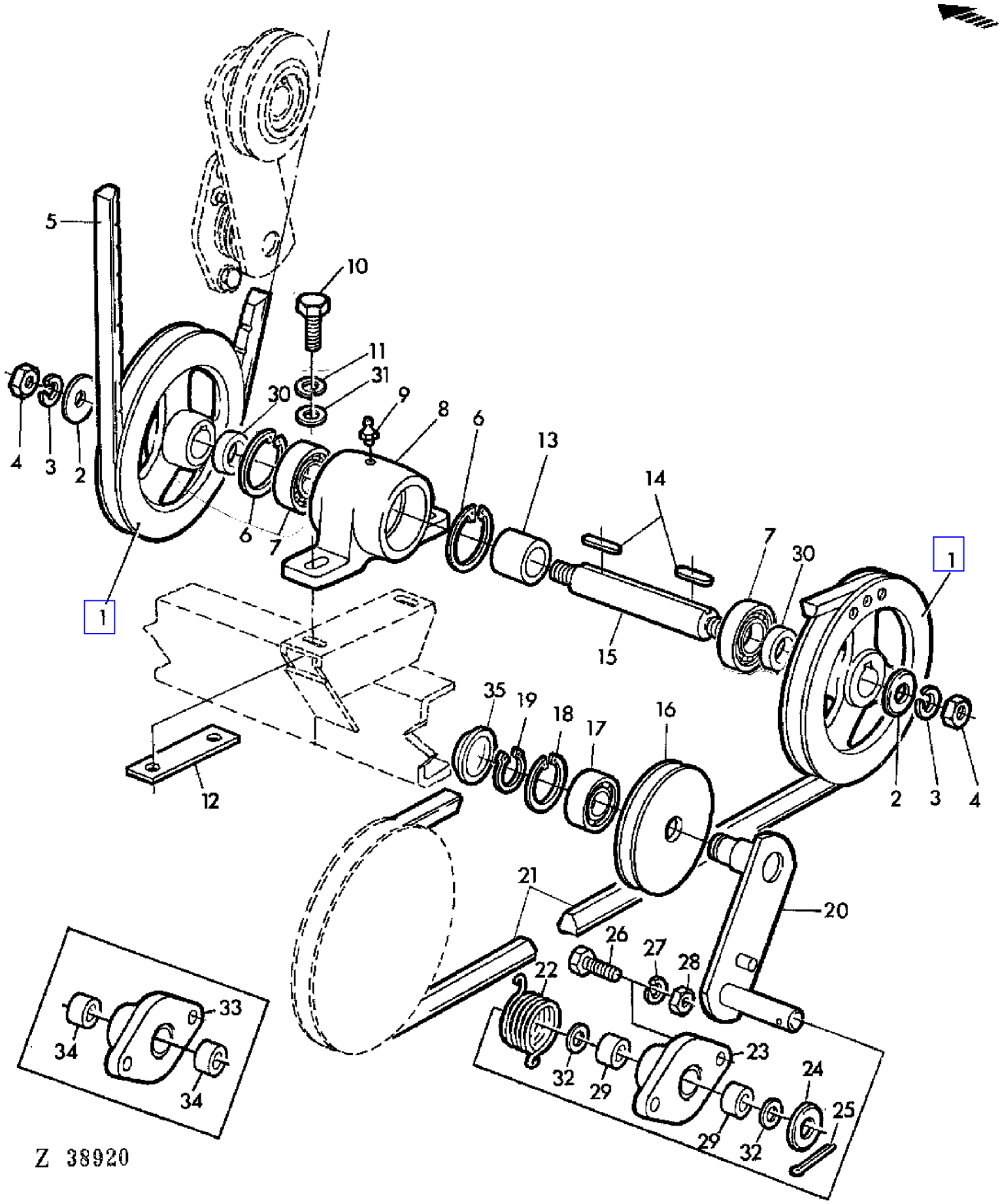

COPYRIGHT©1994 - 2008 DEERE & COMPANY Moline, Illinois All rights reserved

(1B18) FAN DRIVE COUNTERSHAFT
ARBRE DE RENVOI DU VENTILATEUR
VORGELEGE FUER LUEFTERANTRIEB
ALBERO RINVIO VENTILATORE
CONJUNTO INTERMEDIO PARA EL ACCION.DEL VENTILADOR
MELLANDREN FOR FLAKT

KEY	PART NO.	PART NAME	QTY	SERIAL NO.	975	975HY	REMARKS
1	Z11185	PULLEY	2			X	
2	Z21157	WASHER	2			X	
3	12M7014	LOCK WASHER	AR			X	12 MM
4	14M7031	NUT	AR			X	M12
5	Z38149	BELT	1			X	LGTH = 1390 MM
6	40M1868	SNAP RING	2			X	62 X 2 MM
7	JD10044	BALL BEARING	2			X	
8	Z11187	BEARING	1			X	
9	58M7004	LUBRICATION FITTING	1			X	6 X 1 MM
10	19M7168	CAP SCREW	2			X	M10 X 30
11	12M7013	LOCK WASHER	AR			X	10 MM
12	Z39327	STRAP	1			X	
13	Z38151	SPACER	1			X	
14	49M4100	SHAFT KEY	2			X	6 X 6 X 25 MM
15	Z38143	SHAFT	1			X	
16	Z11188	IDLER	1			X	
17	JD30071	BALL BEARING	1			X	
18	40M1863	SNAP RING	1			X	47 X 1,75 MM
19	40M1825	SNAP RING	1			X	20 X 1,2 MM
20	AZ27273	PIVOT	1			X	
21	Z38148	BELT	1			X	LGTH = 1132 MM
22	H86265	TORSION SPRING	1			X	
23	AZ29042	FLANGE	1	023493 -		X	INCL KEYS 29,32 (SUB FOR AZ27271)
24	24M7113	WASHER	1			X	17 MM
25	11M7021	COTTER PIN	1			X	4 X 25 MM
26	19M7163	CAP SCREW	2			X	M8 X 25
27	12M7008	LOCK WASHER	AR			X	8 MM
28	14M7029	NUT	AR			X	M8
29	Z39563	BUSHING	2	023493 -		X	
30	Z38661	WASHER	2			X	
31	24M7040	WASHER	AR			X	11 MM
32	Z39564	FELT	2	023493 -		X	
33	AZ27271	HOLDER	1	- 023492		X	(ORD AZ29042)
34	Z38138	SPACER	2	- 023492		X	
35	30M7002	PLUG	1			X	

COPYRIGHT©1994 - 2008 DEERE & COMPANY Moline, Illinois All rights reserved

(2G12) FAN GUARD,LEFT-HAND
GARANTS DU VENTILATEUR,COTE GAUCHE
GEBLAESESCHUTZE,LINKS
PROTEZIONI DEL VENTILATORE,LATO SINISTRO
CHAPAS PROTECTORAS DEL VENTILADOR,LADO IZQUIERDO
FLAKTSKYDD,VANSTER

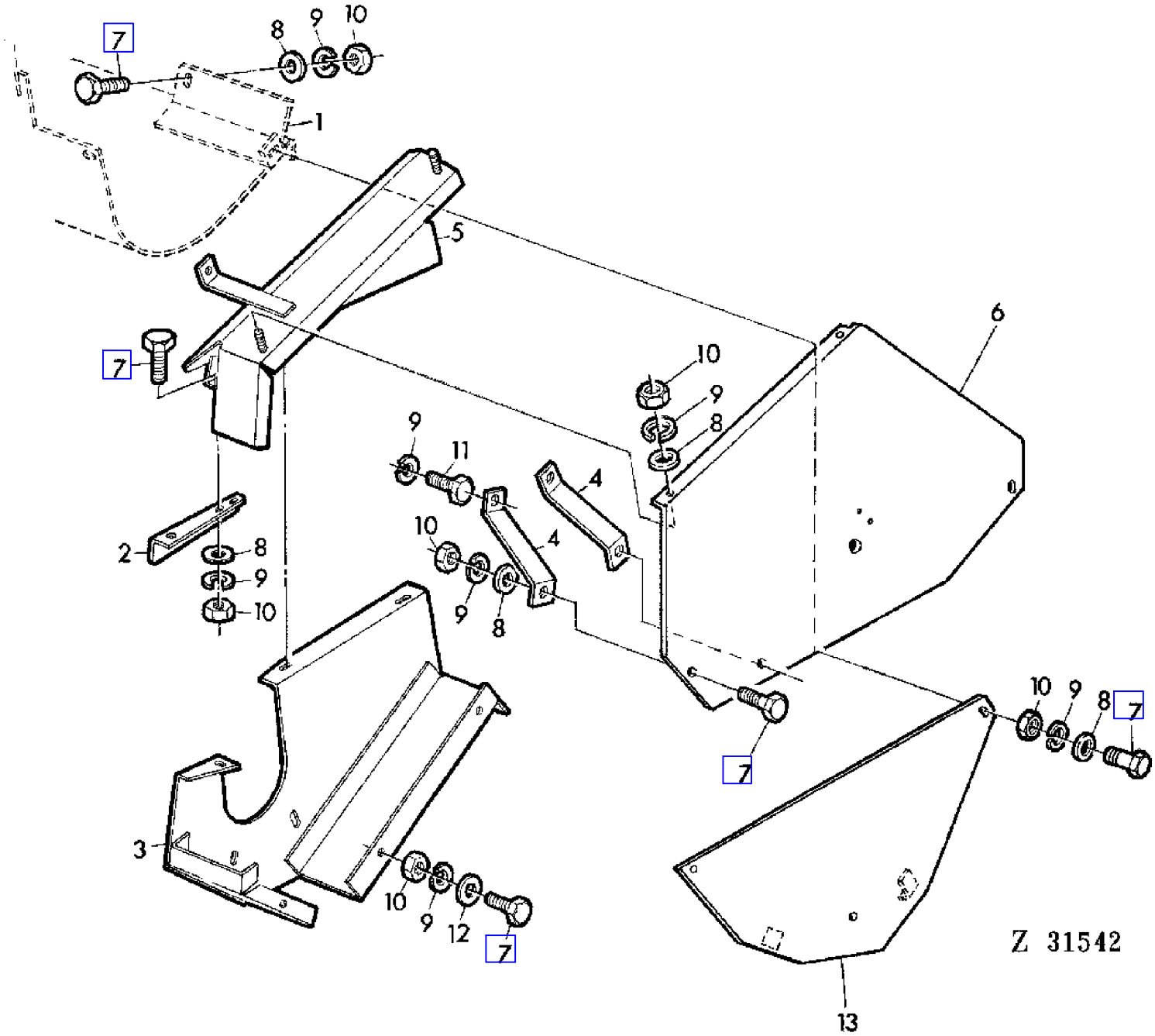

COPYRIGHT©1994 - 2008 DEERE & COMPANY Moline, Illinois All rights reserved

(2G12) FAN GUARD,LEFT-HAND
GARANTS DU VENTILATEUR,COTE GAUCHE
GEBLAESESCHUTZE,LINKS
PROTEZIONI DEL VENTILATORE,LATO SINISTRO
CHAPAS PROTECTORAS DEL VENTILADOR,LADO IZQUIERDO
FLAKTSKYDD,VANSTER

KEY	PART NO.	PART NAME	QTY	SERIAL NO.	975	975HY/4	REMARKS
1	.....	GUARD	1		X	X	(A) (ORD AZ23690)
2	Z34611	ANGLE	1		X	X	(A)
3	AZ23692	GUARD	1		X	X	(A)
4	Z34615	BRACE	2		X	X	(A)
5	AZ23693	GUARD	1		X	X	(A)
6	Z34619	GUARD	1		X	X	(A)
7	19M7139	CAP SCREW	AR		X	X	(A) M8 X 20
8	24M7036	WASHER	AR		X	X	(A) 9 MM
9	12M7008	LOCK WASHER	AR		X	X	(A) 8 MM
10	14M7029	NUT	AR		X	X	(A) M8
11	19H1905	CAP SCREW	2		X	X	(A) 5/16 X 1"
12	24M7024	WASHER	AR		X	X	(A) 9,5 MM
13	AZ26508	GUARD	1			X	(A)

(A) FOR RICE AND MAIZE
POUR RIZ ET MAIS
FUER REIS UND MAIS
PER RISO E MAIS
PARA ARROZ Y MAIZ
FOR RIS OCH MAJS

COPYRIGHT©1994 - 2008 DEERE & COMPANY Moline, Illinois All rights reserved

(2G14) FAN GUARD,RIGHT-HAND
GARANTS DU VENTILATEUR,COTE DROIT
GEBLAESESCHUTZE,RECHTS
PROTEZIONI DEL VENTILATORE,LATO DESTRO
CHAPAS PROTECTORAS DEL VENTILADOR,LADO DERECHO
FLAKTSKYDD,HOGER

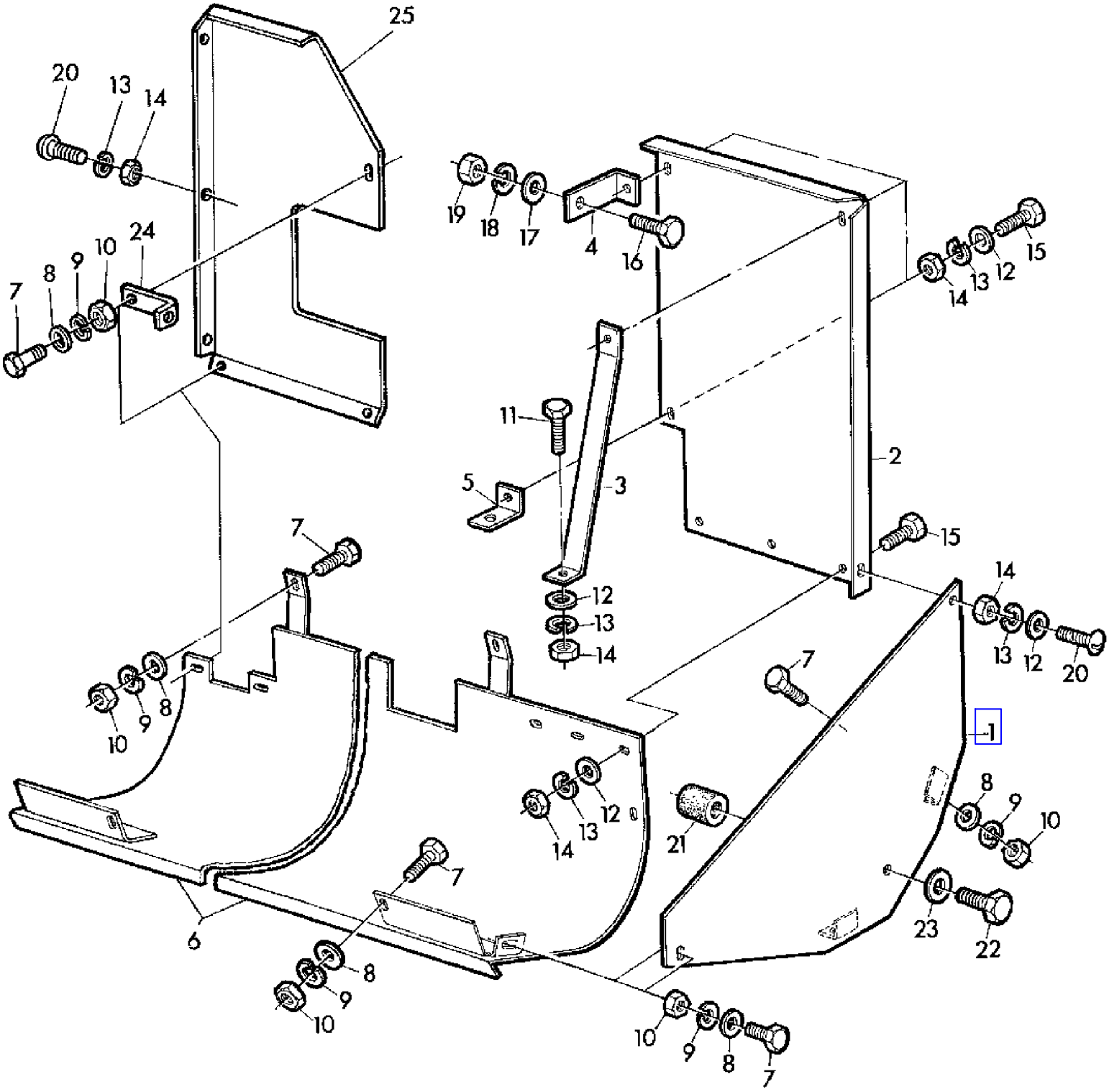

Z 31543

COPYRIGHT©1994 - 2008 DEERE & COMPANY Moline, Illinois All rights reserved

(2G14) FAN GUARD,RIGHT-HAND
GARANTS DU VENTILATEUR,COTE DROIT
GEBLAESESCHUTZE,RECHTS
PROTEZIONI DEL VENTILATORE,LATO DESTRO
CHAPAS PROTECTORAS DEL VENTILADOR,LADO DERECHO
FLAKTSKYDD,HOGER

KEY	PART NO.	PART NAME	QTY	SERIAL NO.	975	975HY/4	REMARKS
1	AZ23695	GUARD	1		X	X	(A)
2	Z34622	GUARD	1		X	X	(A)
3	Z34623	BRACE	1		X	X	(A)
4	Z34624	ANGLE	1		X	X	(A)
5	Z34625	ANGLE	1		X	X	(A)
6	AZ23690	GUARD	1		X	X	(A)
7	19M7139	CAP SCREW	AR		X	X	(A) M8 X 20
8	24M7036	WASHER	AR		X	X	(A) 9 MM
9	12M7008	LOCK WASHER	AR		X	X	(A) 8 MM
10	14M7029	NUT	AR		X	X	(A) M8
11	19M7077	CAP SCREW	1		X	X	(A) M6 X 20
12	Z26250	WASHER	AR		X	X	(A) 6,5 MM
13	12M7012	LOCK WASHER	AR		X	X	(A) 6 MM
14	14M7027	NUT	AR		X	X	(A) M6
15	19M7159	CAP SCREW	AR		X	X	(A) M6 X 16
16	19M7166	CAP SCREW	1		X	X	(A) M10 X 20
17	24M7040	WASHER	1		X	X	(A) M11
18	12M7013	LOCK WASHER	1		X	X	(A) 10 MM
19	14M7140	NUT	1		X	X	(A) M10
20	21M7031	SCREW	1		X	X	(A) M6 X 15
21	Z31640	BUSHING	1		X	X	(A)
22	19M7268	CAP SCREW	1		X	X	(A) M12 X 25
23	24M7102	WASHER	1		X	X	(A) 14 MM
24	Z37594	HOLDER	1		X		
25	Z37595	GUARD	1		X		

(A) FOR RICE AND MAIZE
POUR RIZ ET MAIS
FUER REIS UND MAIS
PER RISO E MAIS
PARA ARROZ Y MAIZ
FOR RIS OCH MAJS

COPYRIGHT©1994 - 2008 DEERE & COMPANY Moline, Illinois All rights reserved

(4D10) FAN HOUSING
CARTER DE VENTILATEUR
GEBLAESEGEHAEUSE
CASSONE VENTILATORE
CARTER DEL VENTILADOR
FLAEKTHUS

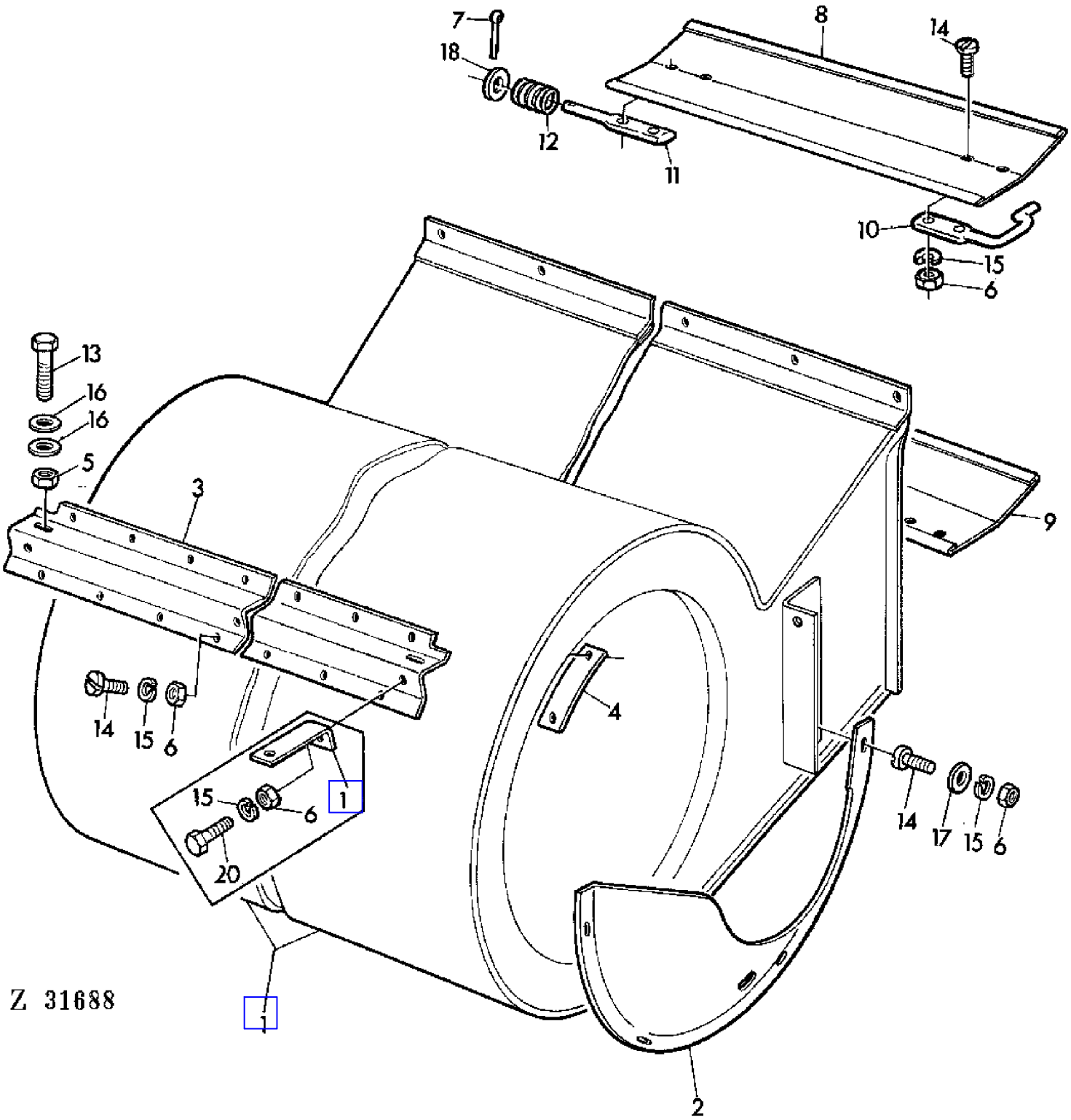

COPYRIGHT©1994 - 2008 DEERE & COMPANY Moline, Illinois All rights reserved

(4D10) FAN HOUSING
CARTER DE VENTILATEUR
GEBLAESEGEHAEUSE
CASSONE VENTILATORE
CARTER DEL VENTILADOR
FLAEKTHUS

KEY	PART NO.	PART NAME	QTY	SERIAL NO.	975	975HY/4	REMARKS
1	AZ23398	HOUSING	1		X	X	
2	Z20559	GUARD	2		X	X	
3	Z33770	HOLDER	1		X	X	
4	Z33768	PLATE	2		X	X	
5	14M7167	LOCK NUT	AR		X	X	M10
6	14M7027	NUT	AR		X	X	M6
7	11M7011	COTTER PIN	1		X	X	3 X 15 MM
8	Z22788	DEFLECTOR	1		X	X	UP
9	Z22786	DEFLECTOR	1		X	X	LOW
10	Z20154	LEVER	2		X	X	
11	Z27520	GUDGEON	2		X	X	
12	L20507	SPRING	2		X	X	
13	19M7167	CAP SCREW	2		X	X	M10 X 25
14	21M7031	SCREW	AR		X	X	M6 X 15
15	12M7012	LOCK WASHER	AR		X	X	6 MM
16	24M7040	WASHER	AR		X	X	11,5 MM
17	24M7088	WASHER	AR		X	X	6,6 MM
18	24M7028	WASHER	AR		X	X	10,5 MM
19	Z34453	HOLDER	2	- 015187	X		
20	19M7077	CAP SCREW	2	- 015187	X		M6 X 20

COPYRIGHT©1994 - 2008 DEERE & COMPANY Moline, Illinois All rights reserved

(4D12) FAN WITH SHAFT AND DEFLECTORS
VENTILATEUR AVEC ARBRE ET DEFLECTEURS
GEBLAESE MIT WELLE UND LEITBLECHEN
VENTILATORE CON ALBERO E DEFLETTORI
VENTILADOR CON EJE Y DEFLECTORES
FLAKT MED AXEL OCH SKYDD

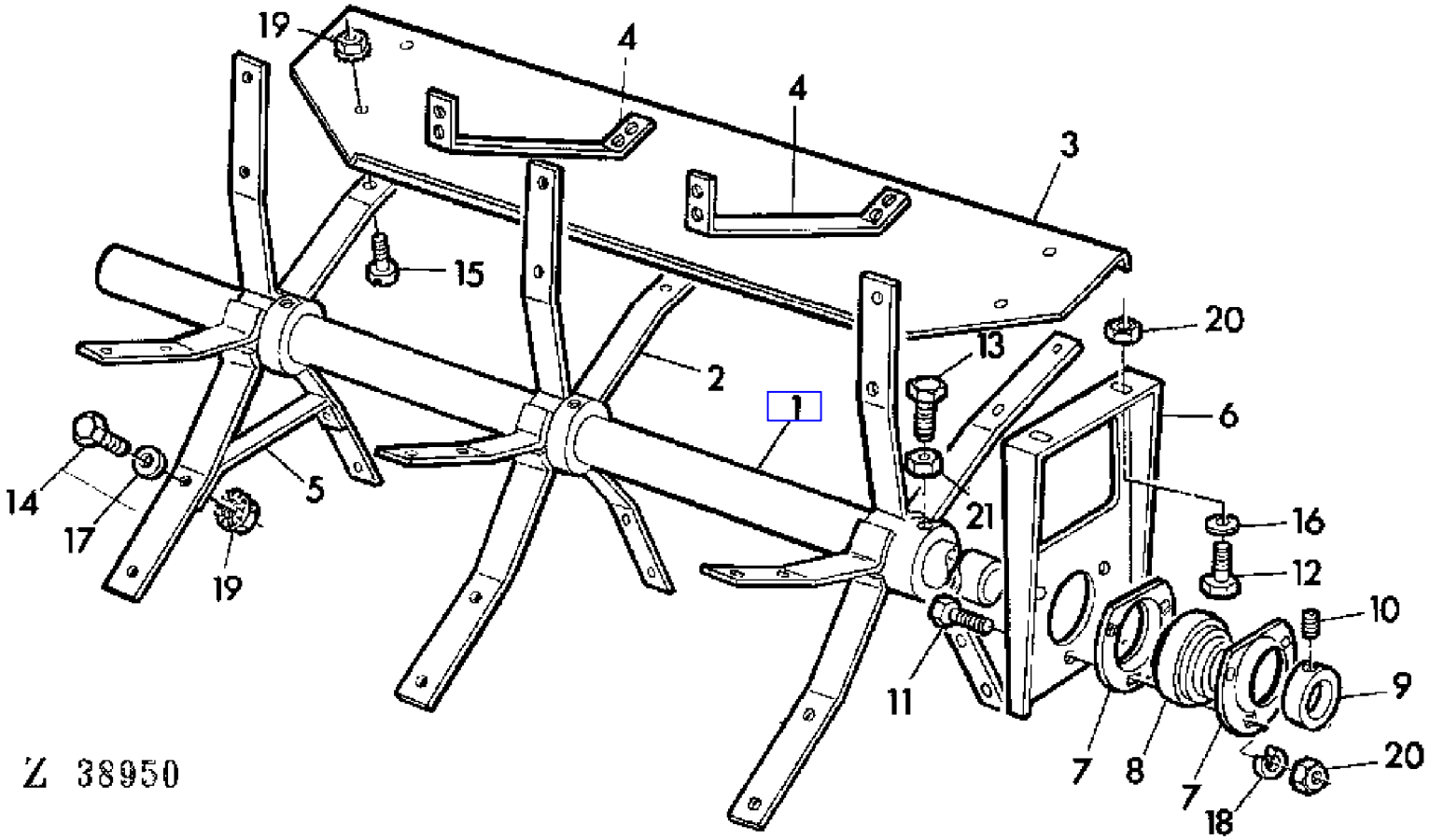

COPYRIGHT©1994 - 2008 DEERE & COMPANY Moline, Illinois All rights reserved

(4D12) FAN WITH SHAFT AND DEFLECTORS
VENTILATEUR AVEC ARBRE ET DEFLECTEURS
GEBLAESE MIT WELLE UND LEITBLECHEN
VENTILATORE CON ALBERO E DEFLETTORI
VENTILADOR CON EJE Y DEFLECTORES
FLAKT MED AXEL OCH SKYDD

KEY	PART NO.	PART NAME	QTY	SERIAL NO.	975	975HY/4	REMARKS
1	Z22996	SHAFT	1		X	X	
2	AZ28398	HUB	3		X	X	(SUB FOR AZ10076)
3	Z22785	SHEET	5		X	X	
4	Z32818	BRACE	10		X	X	
5	Z26573	BRACE	10		X	X	
6	Z20164	SUPPORT	2		X	X	
7	Z38395	PRESSED FLANGED HOUSING	4		X	X	
8	JD10384	BEARING	2		X	X	(SUB FOR JD39106)
9	AZ10045	ECCENTRIC LOCKING COLLAR	2		X	X	ASSY, INCL KEY 10
10	AZ19844	SET SCREW	2		X	X	KIT
11	19M7166	CAP SCREW	6		X	X	M10 X 20
12	19M7168	CAP SCREW	4		X	X	M10 X 30
13	22M7078	SET SCREW	3		X	X	M10 X 35
14	19M7286	CAP SCREW	AR		X	X	M6 X 25
15	19M7159	CAP SCREW	AR		X	X	M6 X 16
16	24M7040	WASHER	AR		X	X	11 MM
17	Z26250	WASHER	AR		X	X	
18	12M7013	LOCK WASHER	AR		X	X	10 MM
19	Z41039	LOCK NUT	AR		X	X	M6
20	14M7140	NUT	10		X	X	M10
21	14M7167	LOCK NUT	3		X	X	M10

COPYRIGHT©1994 - 2008 DEERE & COMPANY Moline, Illinois All rights reserved

(3D05) FAN-AIR CONDITIONED CAB
VENTILATEUR-CABINE CLIMATISEE
VENTILATOR-KABINE MIT KLIMAANLAGE
VENTILATORE-CABINA CONDIZIONATA
VENTILADOR-CABINA CON AIRE ACONDICIONADO
FLAKT-HYTT MED LUFTKONDITIONERING

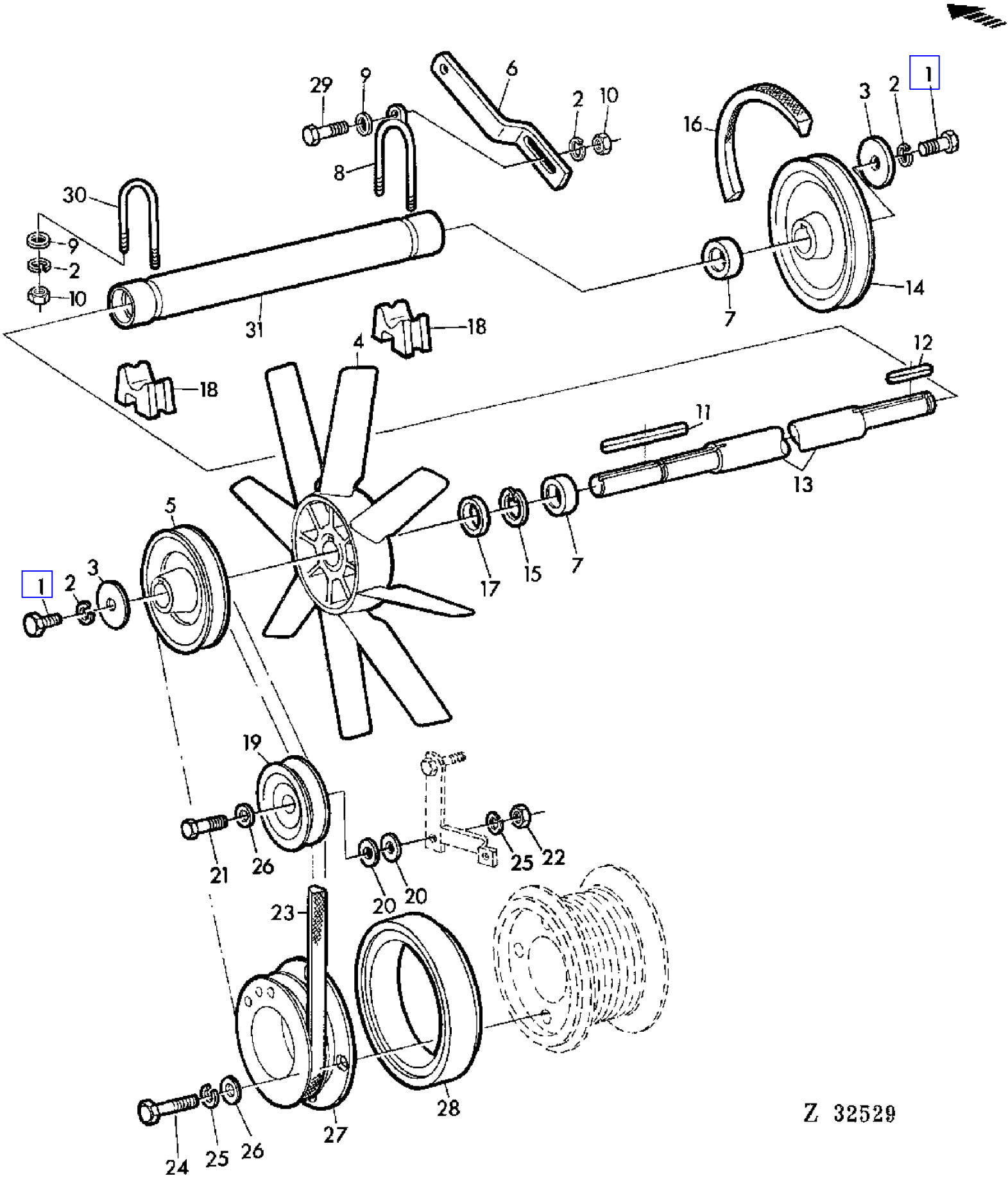

COPYRIGHT©1994 - 2008 DEERE & COMPANY Moline, Illinois All rights reserved

(3D05) FAN-AIR CONDITIONED CAB
VENTILATEUR-CABINE CLIMATISEE
VENTILATOR-KABINE MIT KLIMAANLAGE
VENTILATORE-CABINA CONDIZIONATA
VENTILADOR-CABINA CON AIRE ACONDICIONADO
FLAKT-HYTT MED LUFTKONDITIONERING

KEY	PART NO.	PART NAME	QTY	SERIAL NO.	975	975HY/4	REMARKS
1	19M7139	CAP SCREW	1		X	X	M8 X 20
2	12M7072	LOCK WASHER	1		X	X	8 MM
3	CA20725	WASHER	1		X	X	
4	DA20511	FAN	1		X	X	
5	CA22531	PULLEY	1		X	X	
6	CA23485	LEVER	1		X	X	
7	JD30071	BALL BEARING	2		X	X	(SUB FOR JD30284)
8	DA22524	BAIL	1		X	X	
9	24M7036	WASHER	AR		X	X	9 MM
10	14M7029	NUT	6		X	X	M8
11	49M4821	SHAFT KEY	1		X	X	6 X 6 X 32 MM
12	49M4834	SHAFT KEY	2		X	X	6 X 6 X 36 MM
13	CA23483	JACKSHAFT	1		X	X	
14	CA20512	PULLEY	1		X	X	
15	40M1863	SNAP RING	1		X	X	4 X 1,75 MM
16	CA20514	BELT	1		X	X	
17	CA22528	WASHER	1		X	X	
18	CA22529	SUPPORT	2		X	X	
19	AZ24263	IDLER	1		X	X	
20	24M7140	WASHER	1		X	X	13 X 19 X 1 MM
21	19M7330	CAP SCREW	1		X	X	M12 X 55
22	14M7031	NUT	1		X	X	M12
23	CA20518	BELT	1		X	X	
24	19M7331	CAP SCREW	4		X	X	M12 X 65
25	12M7014	LOCK WASHER	4		X	X	12 MM
26	24M7047	WASHER	4		X	X	13 MM
27	CA20552	PULLEY	1		X	X	
28	CA20553	SPACER	1		X	X	AR
29	19M7163	CAP SCREW	1		X	X	M8 X 25
30	CA22525	BAIL	1		X	X	
31	CA23484	TUBE	1		X	X	

COPYRIGHT©1994 - 2008 DEERE & COMPANY Moline, Illinois All rights reserved

(3F14) FEEDER CONVEYOR DRIVE
ENTRAINEMENT DU CONVOYEUR D'ALIMENTATION
SCHRAEGFOERDERER ANTRIEB
COMANDO COLLO ALIMENTATORE
TRANSMISION DEL ELEVADOR DE MIES
INMATNINGSELEVATORNS DREV

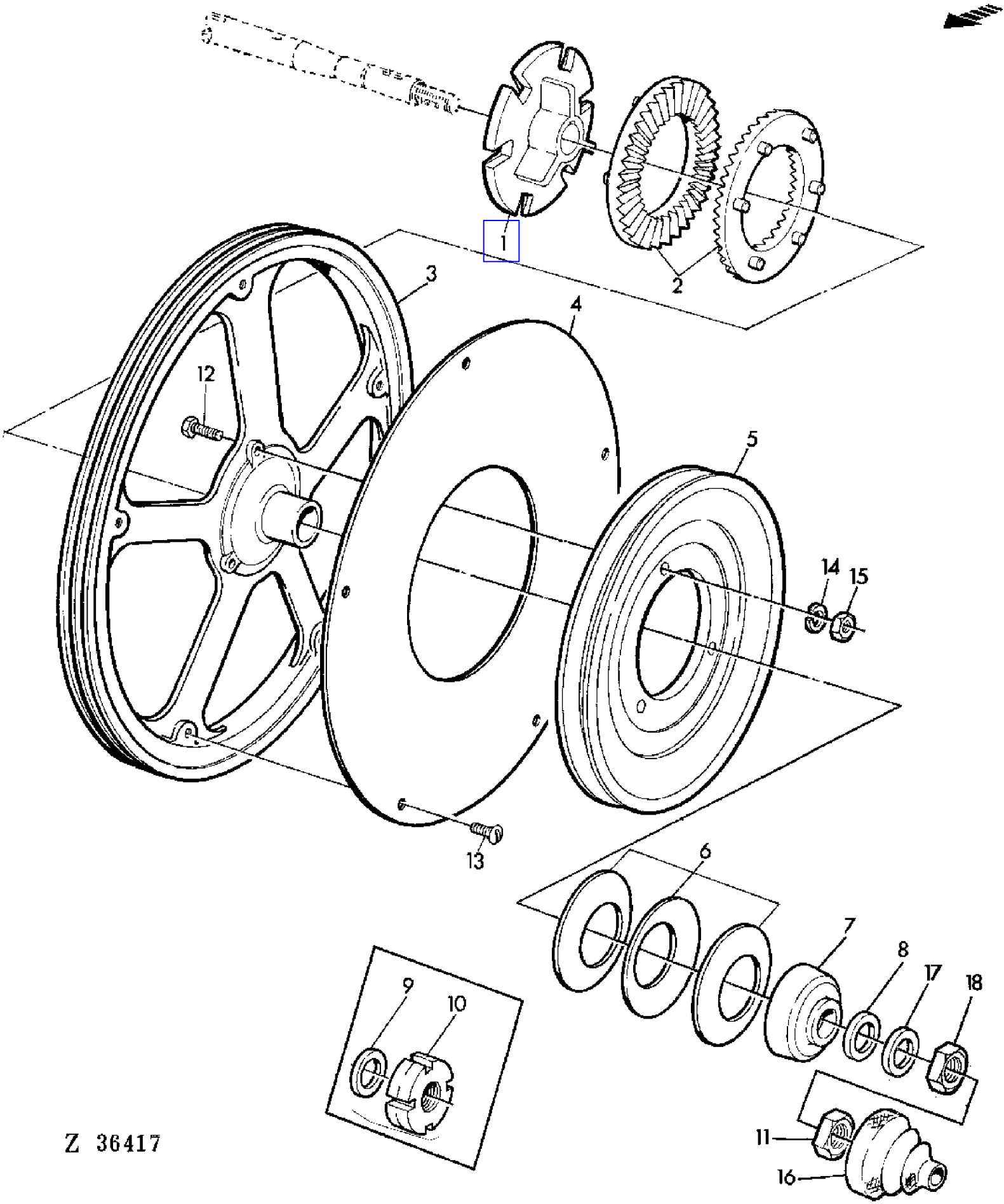

COPYRIGHT©1994 - 2008 DEERE & COMPANY Moline, Illinois All rights reserved

(3F14) FEEDER CONVEYOR DRIVE
ENTRAINEMENT DU CONVOYEUR D'ALIMENTATION
SCHRAEGFOERDERER ANTRIEB
COMANDO COLLO ALIMENTATORE
TRANSMISION DEL ELEVADOR DE MIES
INMATNINGSELEVATORNS DREV

KEY	PART NO.	PART NAME	QTY	SERIAL NO.		975	975HY/4	REMARKS
1	Z10889	DRIVER	1			X	X	
2	Z10847	SLIP CLUTCH	2			X	X	
3	Z11285	SHEAVE	1			X	X	(SUB FOR Z10888, Z11081)
4	Z39576	GUARD	1			X	X	(SUB FOR Z30562)
5	Z10952	PULLEY	1		- 024652	X	X	
	Z11256	SHEAVE	1	024653	-	X	X	
6	Z29634	DISK SPRING	3			X	X	
7	Z10775	THRUST WASHER	1			X	X	
8	Z31187	WASHER	1			X	X	
9	24M7127	WASHER	1		- 025057	X	X	25 X 44 X 4 MM
10	Z10776	NUT	1		- 025057	X	X	
11	14M7212	NUT	1			X	X	M24
12	19M7287	CAP SCREW	3			X		M10 X 50
	19M7327	CAP SCREW	AR				X	M10 X 65
13	21M7083	SCREW	AR			X	X	M6 X 10
14	12M7013	LOCK WASHER	AR			X	X	10 MM
15	14M7140	NUT	AR			X	X	M10
16	Z35052	BOOT	1			X	X	
17	Z38832	WASHER	1	025058	-	X	X	
18	14M7143	NUT	1	025058	-	X	X	M24

COPYRIGHT©1994 - 2008 DEERE & COMPANY Moline, Illinois All rights reserved

(3F16) FEEDER CONVEYOR DRUM (LOWER)
TAMBOUR INFERIEUR DU CONVOYEUR D'ALIMENTATION
SCHRAEGFOERDERWALZE UNTEN
RULLO INFERIORE DEL COLLO ALIMENTATORE
TAMBOR DEL ELEVADOR DE MIES
INMATNINGSELEVATORNS NEDRE RULLE

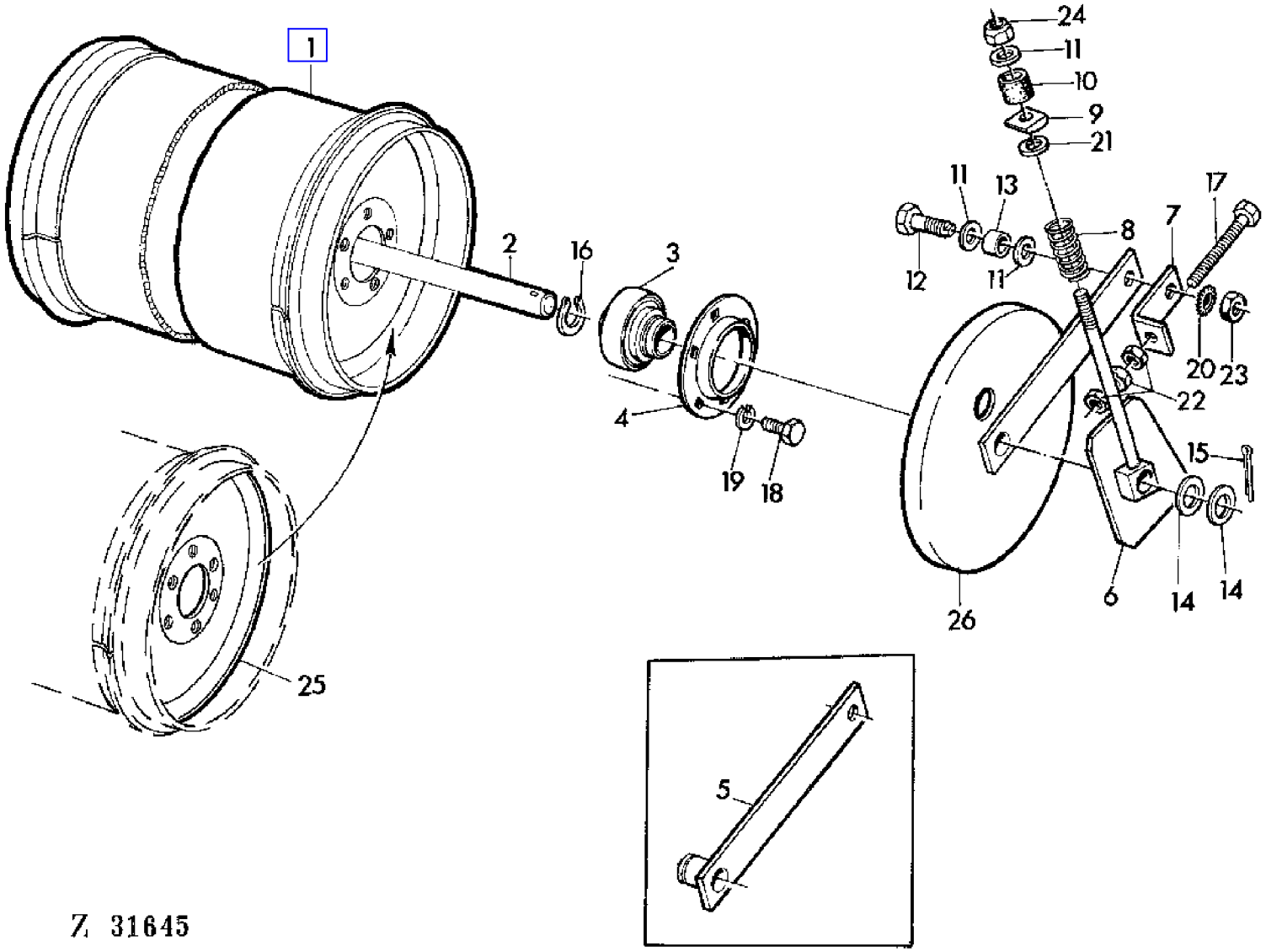

COPYRIGHT©1994 - 2008 DEERE & COMPANY Moline, Illinois All rights reserved

(3F16) FEEDER CONVEYOR DRUM (LOWER)
TAMBOUR INFERIEUR DU CONVOYEUR D'ALIMENTATION
SCHRAEGFOERDERWALZE UNTEN
RULLO INFERIORE DEL COLLO ALIMENTATORE
TAMBOR DEL ELEVADOR DE MIES
INMATNINGSELEVATORNS NEDRE RULLE

KEY	PART NO.	PART NAME	QTY	SERIAL NO.			975	975HY/4	REMARKS
1	AZ21718	DRUM	1		-	012311	X		(ORD AZ25931 W/ (2) AZ25927)
	AZ26879	DRUM	1	012312	-		X	X	(SUB FOR AZ21718, AZ25931)
2	Z30142	SHAFT	1				X	X	
3	JD39104	BALL BEARING	2				X	X	
4	Z44269	PRESSED FLANGED HOUSING	2				X	X	(SUB FOR Z30769, Z37382)
5	AZ18660	LEVER	2		-	012311	X		(ORD AZ25927)
6	AZ18659	ADJUSTER	1				X	X	RH
	AZ18786	ADJUSTER	1				X	X	LH
7	Z30126	ANGLE	2		-	XXXX	X	X	
	Z38536	ANGLE	2	XXXX	-		X	X	
8	Z44511	COMPRESSION SPRING	2				X	X	(SUB FOR Z34419)
9	Z10683	PLATE	2				X	X	
10	P49545	BUSHING	2				X	X	
11	L18889	WASHER	6				X	X	
12	Z30519	CAP SCREW	2				X	X	
13	Z24862	SPACER	2				X	X	
14	Z24651	WASHER	4				X	X	
15	11M7037	COTTER PIN	2				X	X	6,3 X 36 MM
16	40M1833	SNAP RING	2				X	X	35 X 15 MM
17	19M7590	CAP SCREW	2				X	X	M12 X 100
18	19M7166	CAP SCREW	AR				X	X	M10 X 20
19	12M7013	LOCK WASHER	AR				X	X	M10
20	12M7038	LOCK WASHER	2				X	X	M16,5
21	24M7049	WASHER	2				X	X	18 MM
22	14M7031	NUT	6				X	X	M12
23	14M7142	NUT	2				X	X	M16
24	14M7170	LOCK NUT	2				X	X	M16
25	AZ26295	HUB	2				X	X	(SUB FOR AZ21715)
26	AZ25927	SUPPORT	2	012312	-		X	X	

COPYRIGHT©1994 - 2008 DEERE & COMPANY Moline, Illinois All rights reserved

(3E16) FEEDER CONVEYOR HOUSING
CARTER DE CONVOYEUR D'ALIMENTATION
SCHRAEGFOERDER -GEHAEUSE
CASSA DEL COLLO ALIMENTATORE
CARCASA DEL ELEVADOR DE MIES
HUS FOR INMATNINGSELEVATORR

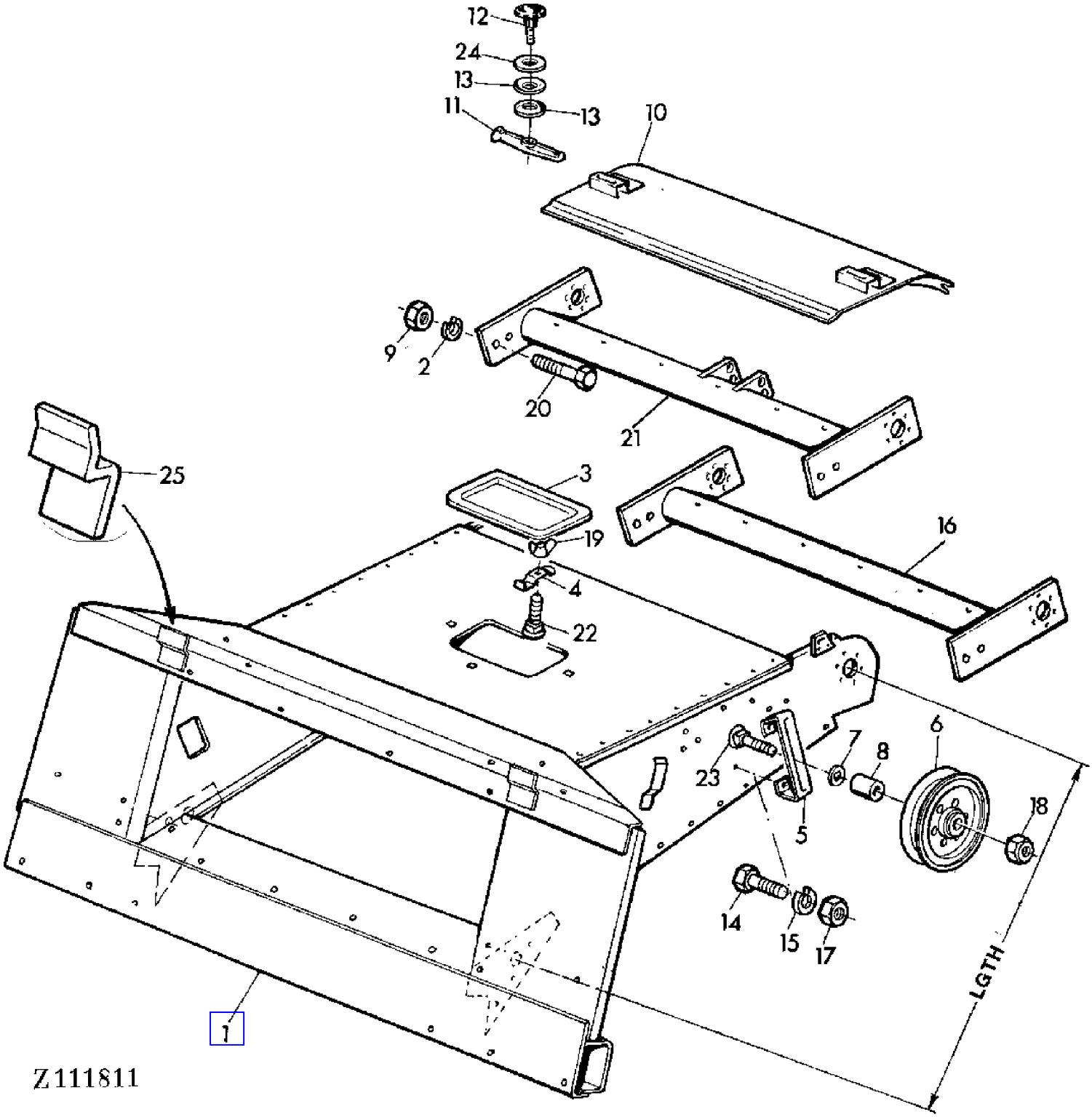

COPYRIGHT©1994 - 2008 DEERE & COMPANY Moline, Illinois All rights reserved

(3E16) FEEDER CONVEYOR HOUSING
CARTER DE CONVOYEUR D'ALIMENTATION
SCHRAEGFOERDER -GEHAEUSE
CASSA DEL COLLO ALIMENTATORE
CARCASA DEL ELEVADOR DE MIES
HUS FOR INMATNINGSELEVATORR

KEY	PART NO.	PART NAME	QTY	SERIAL NO.			975	975HY/4	REMARKS
1	AZ23333	HOUSING	1		-	010731	X		(ORD AZ30134)
	AZ23336	CONVEYOR	1		-	010731	X		(A)
	AZ24770	CONVEYOR	1	010732	-	013567	X		(A) LGTH = 1650 MM
	AZ28933	CONVEYOR	1	013568	-	025572	X	X	(A) (W/ AZ30326) (SUB FOR AZ25955)
	AZ24769	CONVEYOR	1	010732	-	026722	X	X	LGTH = 1400 MM (ORD AZ30134 W/ AZ30323)
	AZ28933	CONVEYOR	1	025573	-		X	X	(A)
	AZ30134	CONVEYOR	1	026723	-		X	X	
2	12M7017	LOCK WASHER	4				X	X	16 MM
3	Z20713	COVER	1				X	X	
4	Z20367	CLAMP	4				X	X	
5	AZ18656	HOLDER	1				X	X	
6	AN30569	IDLER	1		-	032432	X	X	(ORD AZ29185 W/ 03M7212, 14M7170
	AZ29185	IDLER	1	032433	-		X	X	(SUB FOR AN30569)
7	L18889	WASHER	1				X	X	
8	Z22659	SPACER	1				X	X	
9	14M7142	NUT	4				X	X	M16
10	AZ23364	COVER	1				X	X	
11	Z10681	LATCH	2				X	X	
12	AZ18662	HANDLE	2				X	X	
13	Z22631	DISK SPRING	4				X	X	
14	19M7268	CAP SCREW	2				X	X	M12 X 25
15	12M7014	LOCK WASHER	2				X	X	12 MM
16	AZ18648	STABILIZER	1				X	X	(A)
17	14M7031	NUT	2				X	X	M12
18	14M7170	LOCK NUT	1				X	X	M16
19	14M7020	WING NUT	4				X	X	M8
20	19M7395	CAP SCREW	4				X	X	M16 X 40
21	AZ28482	STABILIZER	1				X	X	(SUB FOR AZ18648)
22	03M7054	BOLT	4				X	X	M8 X 20
23	03M7212	BOLT	1				X	X	M16 X 80
24	24M7047	WASHER	1				X	X	14 MM
25	Z35149	HOLDER	1				X	X	
..	AZ30323	CHANNEL	1				X	X	AR, KIT
..	AZ30326	KIT	1				X	X	AR, KIT

(A) FOR FEEDER CONVEYOR LONG
POUR CONVOYEUR D'ALIMENTATION LONG
FUER SCHRAEGFOERDERER LANG
PER COLLO ALIMENTATORE LUNGO
PARA ELEVADOR DE MIES LARGO
FOR LANG INMATNINGSELEVATOR

COPYRIGHT©1994 - 2008 DEERE & COMPANY Moline, Illinois All rights reserved

(3E24) FEEDER CONVEYOR UPPER SHAFT
CONVOYEUR D'ALIMENTATION,ARBRE SUPERIEUR
SCHRAEGFOERDERER OBERE WELLE
ALBERO SUPERIORE DEL COLLO ALIMENTATORE
EJE SUPERIOR DEL ELEVADOR DE MIES
INMATNINGSELEVATORNS OVRE AXEL

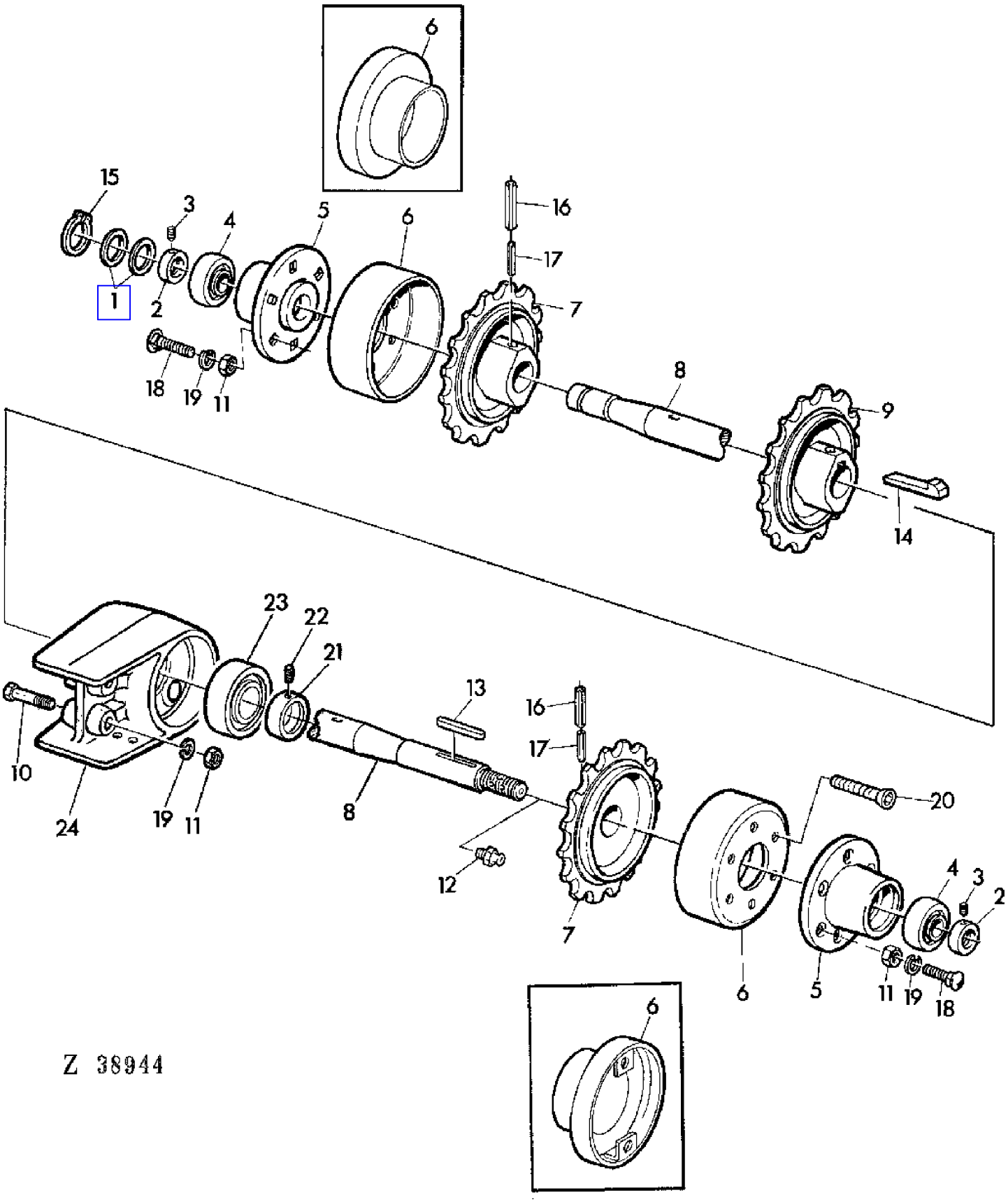

COPYRIGHT©1994 - 2008 DEERE & COMPANY Moline, Illinois All rights reserved

(3E24) FEEDER CONVEYOR UPPER SHAFT
CONVOYEUR D'ALIMENTATION,ARBRE SUPERIEUR
SCHRAEGFOERDERER OBERE WELLE
ALBERO SUPERIORE DEL COLLO ALIMENTATORE
EJE SUPERIOR DEL ELEVADOR DE MIES
INMATNINGSELEVATORNS OVRE AXEL

KEY	PART NO.	PART NAME	QTY	SERIAL NO.			975	975HY/4	REMARKS
1	Z22126	WASHER	AR				X	X	
2	AZ10045	ECCENTRIC LOCKING COLLAR	2				X	X	ASSY, INCL KEY 3
3	22H975	SET SCREW	2				X	X	
4	JD39103	BALL BEARING	2				X	X	
5	Z10682	CASE	2				X	X	
6	Z30124	DEFLECTOR	2		-	010731	X		
	AZ24713	DEFLECTOR	2	010732	-	025572	X	X	
	Z30124	DEFLECTOR	2	025573	-		X	X	
7	Z11544	CHAIN SPROCKET	2		-	010731	X		Z = 14 (SUB FOR Z10816)
	Z11048	CHAIN SPROCKET	2	010732	-	025572	X	X	
	Z11544	CHAIN SPROCKET	2	025573	-		X	X	Z = 14 (SUB FOR Z10816)
8	Z33437	SHAFT	1		-	023547	X	X	OD = 40 MM
	Z39151	SHAFT	1	023548	-		X	X	OD = 40 MM
	Z33437	SHAFT	1				X	X	(A) OD = 40 MM
9	Z11545	CHAIN SPROCKET	1		-	010731	X		Z = 14 (SUB FOR Z10842, Z11049)
	Z11047	CHAIN SPROCKET	1	010732	-	025572	X	X	(A)
	Z11047	CHAIN SPROCKET	1	010732	-	026722	X	X	
	Z11545	CHAIN SPROCKET	1	025573	-		X	X	(A) Z = 14 (SUB FOR Z11049)
	Z11546	CHAIN SPROCKET	1	026723	-		X	X	Z = 14 (SUB FOR Z11266)
10	19M7156	CAP SCREW	2	023548	-		X	X	M10 X 60
11	14M7140	NUT	AR				X	X	M10
12	58M7006	LUBRICATION FITTING	1				X	X	8 X 1 MM
13	49M5426	SHAFT KEY	1				X	X	10 X 8 X 36 MM
14	50M4203	SHAFT KEY	1				X	X	10 X 8 X 63 MM
15	40M1831	SNAP RING	1				X	X	30 X 15 MM
16	34M7073	SPRING PIN	2				X	X	10 X 65 MM
17	34M7045	SPRING PIN	2				X	X	6 X 60 MM
18	09M7003	BOLT	8				X	X	M10 X 40
19	12M7013	LOCK WASHER	AR				X	X	10 MM
20	19M7666	SCREW	4				X	X	M10 X 40
21	AL14674	ECCENTRIC LOCKING COLLAR	1	023548	-		X	X	
22	22M7081	SET SCREW	1	023548	-		X	X	
23	JD39109	BALL BEARING	1	023548	-		X	X	
24	Z11245	CASE	1	023548	-		X	X	

(A) FOR FEEDER CONVEYOR LONG
POUR CONVOYEUR D'ALIMENTATION LONG
FUER LANGEN SCHRAEGFOERDERER
PER COLLO ALIMENTATORE LUNGO
PARA ELEVADOR DE MIES LARGO
FOR LANG INMATNINGSELEVATOR

COPYRIGHT©1994 - 2008 DEERE & COMPANY Moline, Illinois All rights reserved

(3F02) FEEDER CONVEYOR-CHAIN L-PROFILE
CHAINE DU CONVOYEUR D'ALIMENTATION FER EN L
SCHRAEGFOERDERERKETTE L-PROFIL
CATENA DEL CONVOGLIATORE PROFILO DI L
CADENA DEL ELEVADOR DE MIES H CANGILONES EN L
INMATNINGSELEVATORKEDJA PROFIL L

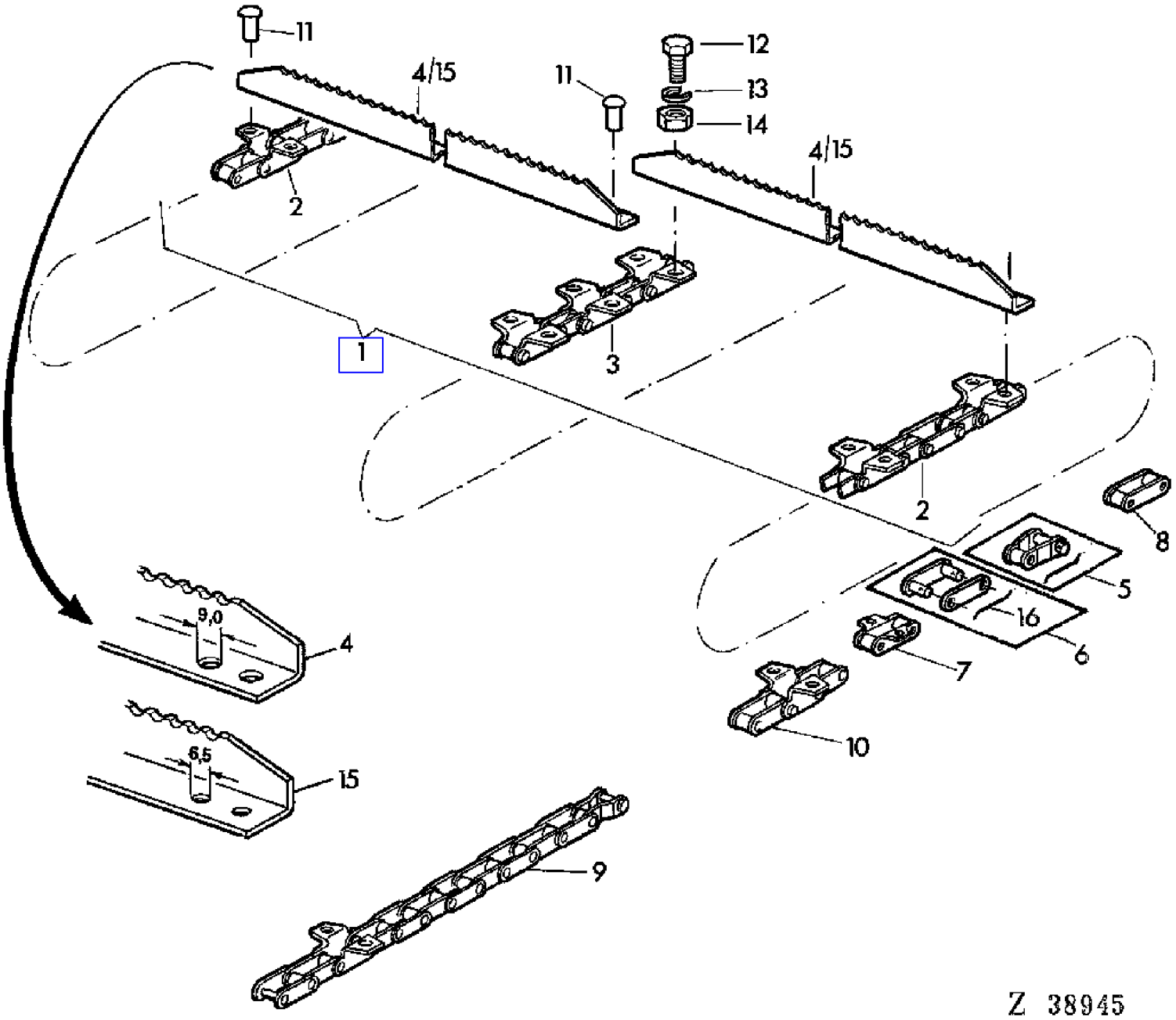

COPYRIGHT©1994 - 2008 DEERE & COMPANY Moline, Illinois All rights reserved

(3F02) FEEDER CONVEYOR-CHAIN L-PROFILE
CHAINE DU CONVOYEUR D'ALIMENTATION FER EN L
SCHRAEGFOERDERERKETTE L-PROFIL
CATENA DEL CONVOGLIATORE PROFILO DI L
CADENA DEL ELEVADOR DE MIES H CANGILONES EN L
INMATNINGSELEVATORKEDJA PROFIL L

KEY	PART NO.	PART NAME	QTY	SERIAL NO.	975	975HY/4	REMARKS
1	AZ18679	LINK CHAIN	1		X		(A) ASSY, INCL KEYS 2-4,11-14
2	AZ18658	GATHERER CHAIN	2		X	X	(A) L = 87
3	AZ18684	GATHERER CHAIN	1		X	X	(A) L = 87
4	Z30159	SLAT	43		X	X	(A)
5	AL15482	CHAIN LINK	1		X	X	
6	AL15481	CHAIN LINK	AR		X	X	
7	AZ15185	LINK	AR		X	X	(B)
8	AL15479	LINK	AR		X	X	
9	AL15476	LINK CHAIN	AR		X	X	ASSY, INCL KEY 10, KEY (5) 6, KEY 5, KEY (5) 8,
10	AL15490	LINK	AR		X	X	
11	16M2523	RIVET	AR		X	X	6 X 15 MM
12	19M7159	CAP SCREW	AR		X	X	M6 X 15
13	12M7012	LOCK WASHER	AR		X	X	6 MM
14	14M7027	NUT	AR		X	X	M6
15	Z40691	SLAT	43		X	X	(A)
16	Z41567	WIRE	AR		X	X	
17	Z44617	WIRE	AR		X	X	

(A) FOR FEEDER CONVEYOR SHORT
POUR CONVOYEUR D'ALIMENTATION COURT
FUER KURZEN SCHRAEGFOERDERER
PER COLLO ALIMENTATORE CORTO
PARA ELEVADOR DE MIES CORTO
FOR KORT INMATNINGSELEVATOR

(B) FOR CENTERCHAIN
POUR CHAINE CENTRALE
FUER MITTLERE KETTE
PER CATENACENTRALE
PARA LA CADENA CENTRAL
FOR MITTKEDJA

COPYRIGHT©1994 - 2008 DEERE & COMPANY Moline, Illinois All rights reserved

(3F04) FEEDER CONVEYOR-CHAIN T-PROFILE
CHAINE DU CONVOYEUR D'ALIMENTATION FER EN T
SCHRAEGFOERDERERKETTE T-PROFIL
CATENA DEL COLLO ALIMENTATORE,PROFILO DI T
CADENA DEL ELEVADOR DE MIES CANGILONES EN T
INMATNINGSELEVATORKEDJA,PROFIL T

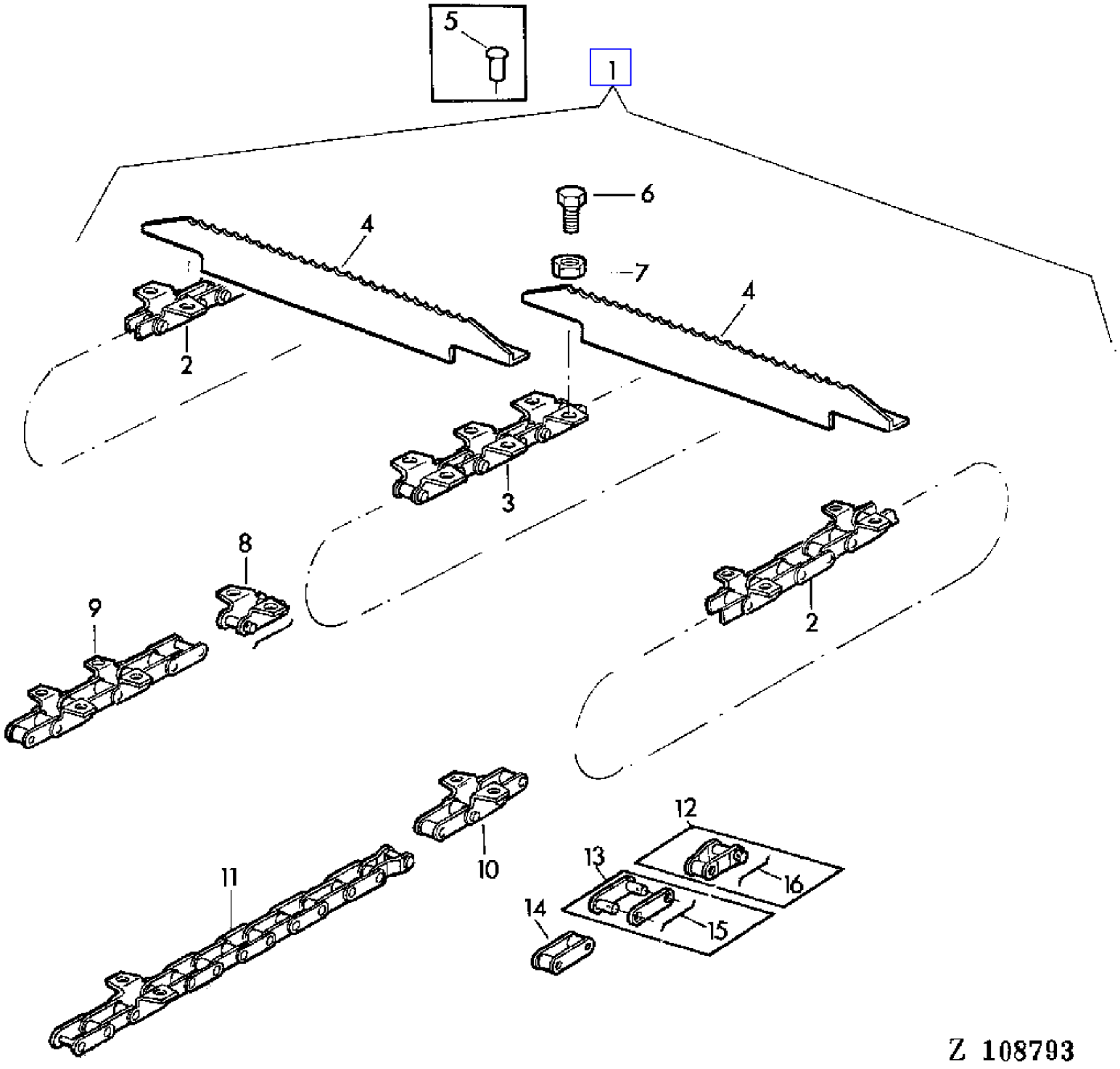

COPYRIGHT©1994 - 2008 DEERE & COMPANY Moline, Illinois All rights reserved

(3F04) FEEDER CONVEYOR-CHAIN T-PROFILE
CHAINE DU CONVOYEUR D'ALIMENTATION FER EN T
SCHRAEGFOERDERERKETTE T-PROFIL
CATENA DEL COLLO ALIMENTATORE,PROFILO DI T
CADENA DEL ELEVADOR DE MIES CANGILONES EN T
INMATNINGSELEVATORKEDJA,PROFIL T

KEY	PART NO.	PART NAME	QTY	SERIAL NO.			975	975HY/4	REMARKS
1	AZ24241	GATHERER CHAIN	1		-	010731	X		INCL KEYS 2-7, L=87 (SUB FOR AZ22617)
	AZ24238	LINK CHAIN	1		-	010731	X		(A) INCL KEYS 2-7, L = 100 (SUB FOR AZ22615)
	AZ24730	LINK CHAIN	1	010732	-	013567	X		(A) INCL KEYS 2-7, L = 98
	AZ24729	LINK CHAIN	1	010732	-	026722	X	X	INCL KEYS 2-4,6,7, L = 85
	AZ25940	CHAIN LINK	1	013568	-	025572	X	X	(A) INCL KEYS 2-4,6,7, L = 105
	AZ28851	LINK CHAIN	1	025573	-		X	X	(A) L = 107
	AZ24241	GATHERER CHAIN	1	026723	-		X	X	INCL KEYS 2-7, L = 87
2	AZ24239	GATHERER CHAIN	2		-	010731	X		L = 87 (SUB FOR AZ22621)
	AZ24244	GATHERER CHAIN	2		-	010731	X		(A) L = 100 (SUB FOR AZ22619)
	AZ24734	GATHERER CHAIN	2	010732	-	013567	X		(A) L = 98
	AZ26346	GATHERER CHAIN	2	013568	-	025572	X	X	(A) L = 105
	AZ24716	GATHERER CHAIN	2	010732	-		X	X	L = 85
	AZ28842	LINK CHAIN	2	025573	-		X	X	(A) L = 107
	AZ24239	GATHERER CHAIN	2	026723	-		X	X	L = 87
3	AZ24240	GATHERER CHAIN	1		-	010731	X		L = 87 (SUB FOR AZ22622)
	AZ24243	GATHERER CHAIN	1		-	010731	X		(A) L = 100 (SUB FOR AZ22620)
	AZ24733	GATHERER CHAIN	1	010732	-	013567	X		(A) L = 98
	AZ24717	GATHERER CHAIN	1	010732	-	026722	X	X	L = 85
	AZ25941	CHAIN LINK	1	013568	-	025572	X	X	(A) L = 105
	AZ28843	LINK CHAIN	1	025573	-		X	X	(A) L = 107
	AZ24240	GATHERER CHAIN	2	026723	-		X	X	L = 87
4	Z33621	SLAT	30				X	X	
	Z33621	SLAT	36				X	X	(A)
5	16M2545	RIVET	AR				X		AR, 8 X 15 MM
6	19M7284	CAP SCREW	AR				X	X	M8 X 18
7	14M7166	LOCK NUT	AR				X	X	M8
8	AZ24231	CHAIN LINK	AR				X	X	
9	AZ24235	GATHERER CHAIN	AR				X	X	ASSY, INCL KEY 8, KEY 13, KEY (3) 5
10	AZ24230	LINK	AR				X	X	
11	AZ24236	GATHERER CHAIN	AR				X	X	ASSY, INCL KEY 9, KEY (5) 13, KEY (5) 5, KEY 12
12	AZ24233	CHAIN LINK	AR				X	X	
13	AZ24232	CHAIN LINK	AR				X	X	
14	AZ24234	LINK	AR				X	X	
15	Z41567	WIRE	AR				X	X	
16	Z44617	WIRE	AR				X	X	

(A) FOR FEEDER CONVEYOR LONG
POUR CONVOYEUR D'ALIMENTATION LONG
FUER SCHRAEGFOERDERER LANG
PER COLLO ALIMENTATORE LUNGO
PARA ELEVADOR DE MIES LARGO
FOR LANG INMATNINGSELEVATOR

COPYRIGHT©1994 - 2008 DEERE & COMPANY Moline, Illinois All rights reserved

(2F22) FEEDER HOUSE GUARD
GARANT DE CONVOYEUR D'ALIMENTATION
SCHRAEGEFOERDERER-SCHUTZ
PROTEZIONE DEL COLLO ALIMENTATORE
CHAPA PROTECTORA DEL ELEVADOR
SKYDD FOR INMATNINGSELEVATOR

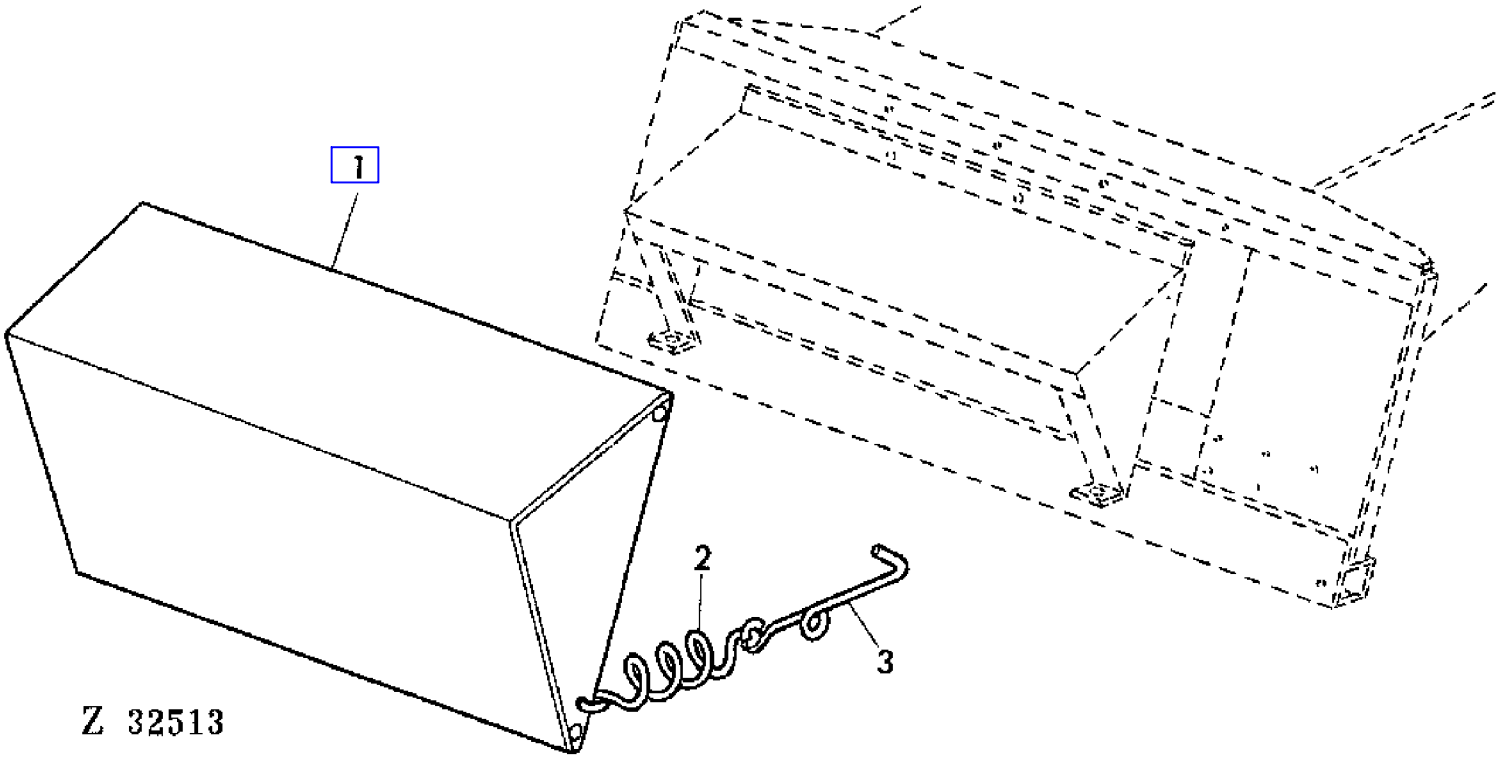

COPYRIGHT©1994 - 2008 DEERE & COMPANY Moline, Illinois All rights reserved

(2F22) FEEDER HOUSE GUARD
GARANT DE CONVOYEUR D'ALIMENTATION
SCHRAEGEFOERDERER-SCHUTZ
PROTEZIONE DEL COLLO ALIMENTATORE
CHAPA PROTECTORA DEL ELEVADOR
SKYDD FOR INMATNINGSELEVATOR

KEY	PART NO.	PART NAME	QTY	SERIAL NO.	975	975HY/4	REMARKS
1	AZ29548	GUARD	1		X	X	
2	Z21613	EXTENSION SPRING	2		X	X	
3	Z34398	HOOK	2		X	X	

COPYRIGHT©1994 - 2008 DEERE & COMPANY Moline, Illinois All rights reserved

(3D15) FILTER WITH 2ND CLEANING UNIT-AIR CONDITIONED CAB
FILTRE AVEC 2EME ELEMENT DE NETTOYAGE-CABINE DIMATISEE
FILTER BEI 2.REINIGUNG-KABINE MIT KLIMAANLAGE
FILTRO CON SECONDA PULIZIA-CABINA CONDIZIONATA
FILTRO CON 2A UNIDAD DE FILTRAJE-CABINA CON AIRE ACONDICIONA
FILTER MED TVA RENSNINGAR-HYTT MED LUFTKONDITIONERING

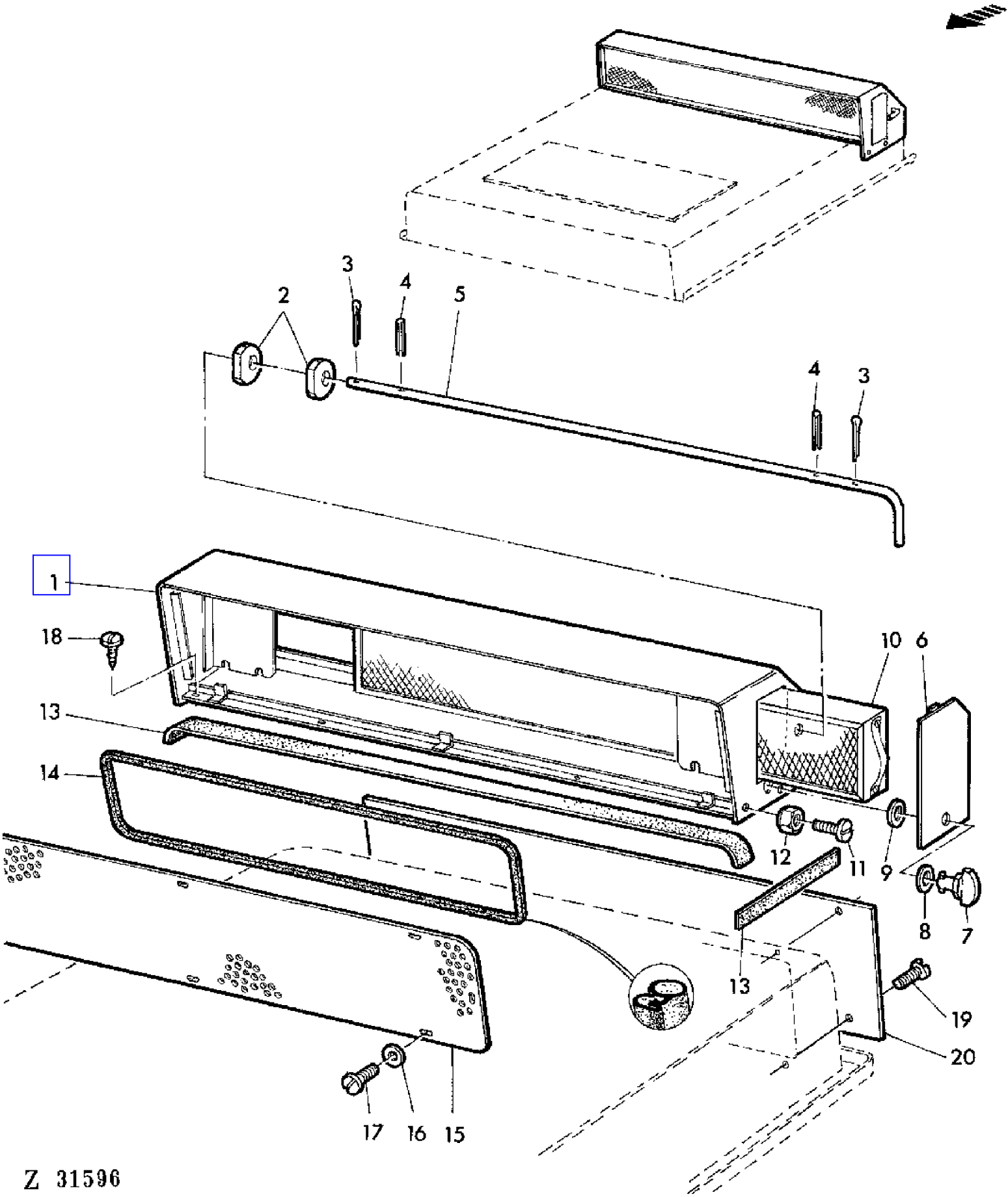

COPYRIGHT©1994 - 2008 DEERE & COMPANY Moline, Illinois All rights reserved

(3D15) FILTER WITH 2ND CLEANING UNIT-AIR CONDITIONED CAB
FILTRE AVEC 2EME ELEMENT DE NETTOYAGE-CABINE DIMATISEE
FILTER BEI 2.REINIGUNG-KABINE MIT KLIMAANLAGE
FILTRO CON SECONDA PULIZIA-CABINA CONDIZIONATA
FILTRO CON 2A UNIDAD DE FILTRAJE-CABINA CON AIRE ACONDICIONA
FILTER MED TVA RENSNINGAR-HYTT MED LUFTKONDITIONERING

KEY	PART NO.	PART NAME	QTY	SERIAL NO.	975	975HY	REMARKS
1	DA21385	HOUSING	1		X	X	
2	CA20331	GUIDE	2		X	X	
3	11M7020	COTTER PIN	2		X	X	4 X 22 MM
4	34M7029	SPRING PIN	2		X	X	4 X 30 MM
5	CA20247	ROD	1		X	X	
6	DA21400	COVER	1		X	X	
7	AE31927	STUD	1		X	X	
8	24M1254	WASHER	1		X	X	
9	E50846	LOCK WASHER	1		X	X	
10	AH80920	FILTER	1		X	X	
11	21M7031	SCREW	10		X	X	M6 X 15
12	14M7165	LOCK NUT	6		X	X	M6
13	CA20531	WEATHERSTRIP	1		X	X	20 X 4 MM X 3000 MM
14	CA21487	GASKET	1		X	X	
15	CA20236	SCREEN	1		X	X	
16	24M7088	WASHER	6		X	X	5,5 MM
17	21M7199	SCREW	6		X	X	M5 X 10
18	37M7029	SCREW	4		X	X	M5,5 X 13
19	H82734	SCREW	6		X	X	
20	H81689	SHEET	1		X	X	

COPYRIGHT©1994 - 2008 DEERE & COMPANY Moline, Illinois All rights reserved

(1I21) FINAL DRIVE
COMMANDES FINALES
ENDANTRIEB
RIDUZIONE FINALE
MANDO FINAL
SLUTDREV

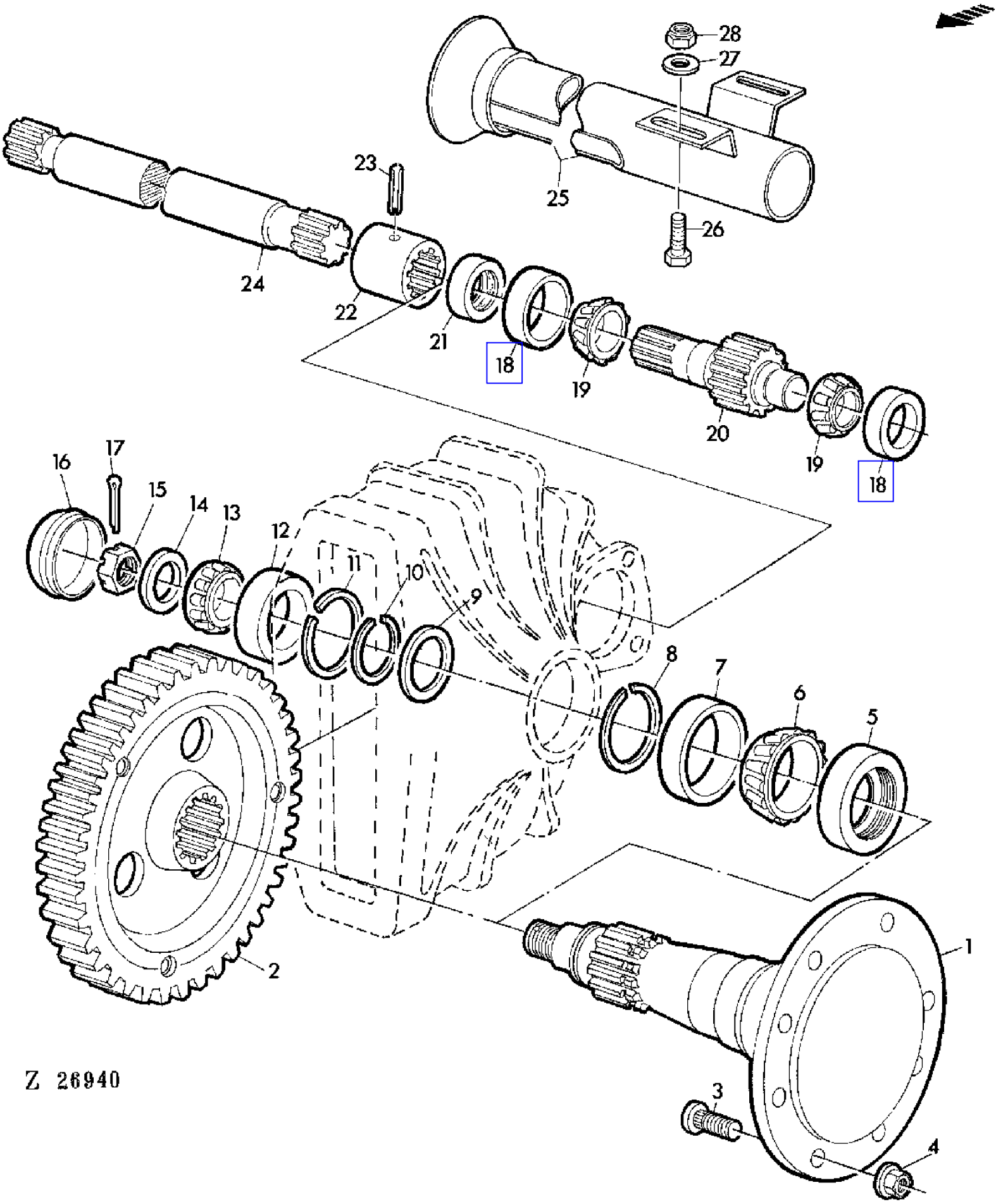

COPYRIGHT©1994 - 2008 DEERE & COMPANY Moline, Illinois All rights reserved

(1I21) FINAL DRIVE
COMMANDES FINALES
ENDANTRIEB
RIDUZIONE FINALE
MANDO FINAL
SLUTDREV

KEY	PART NO.	PART NAME	QTY	SERIAL NO.		975	975HY/4	REMARKS
1	Z11284	HALF AXLE	2		- 010731	X		(SUB FOR Z10770, Z28629)
2	AZ23265	GEAR	2		- 010731	X		
3	Z36742	WHEEL BOLT	16			X		(SUB FOR Z34488)
4	14M7238	FLANGE NUT	16			X		M18
5	AH12089	PACKING	2		- 010731	X		
6	JD8191	BEARING CONE	2		- 010731	X		
7	JD8214	BEARING CUP	2		- 010731	X		
8	P48703	SNAP RING	2		- 010731	X		
9	P49585	WASHER	2		- 010731	X		
10	P48697	SNAP RING	2		- 010731	X		
11	P48692	SNAP RING	2		- 010731	X		(FOR Z11097)
12	JD7425	BEARING CUP	2		- 010731	X		
13	JD8161	BEARING CONE	2		- 010731	X		(SUB FOR JD8103)
14	H21870	WASHER	2		- 010731	X		
15	H21871	NUT	2		- 010731	X		
16	P48698	CAP	2		- 010731	X		
17	11H244	COTTER PIN	2		- 010731	X		
18	JD7266	BEARING CUP	4			X		
19	JD7222	BEARING CONE	4			X		
20	H65260	PINION	2		- 016667	X		
	Z11315	PINION	2	016668	-	X		(SUB FOR Z11171, Z11271)
21	AH81622	SEAL	2			X		(SUB FOR T22069)
22	Z31218	SPACER	4		- 016667	X		
	Z37932	SPLINED COUPLING	2	016668	-	X		
23	34H386	SPRING PIN	4			X		1/4" X 2"
24	H36520	DRIVE SHAFT	1		- 016667	X		LH
	Z29011	SHAFT	1		- 016667	X		RH
	Z37937	SHAFT	1	016668	-	X		LH
	Z37940	SHAFT	1	016668	-	X		RH
25	AZ24221	GUARD	AR			X		LH
	AZ24222	GUARD	AR			X		RH
26	19M7167	CAP SCREW	2			X		M10 X 25
27	24M7040	WASHER	2			X		11 MM
28	14M7167	LOCK NUT	2			X		M10

COPYRIGHT©1994 - 2008 DEERE & COMPANY Moline, Illinois All rights reserved

(1I23) FINAL DRIVE
COMMANDES FINALES
ENDANTRIEB
RIDUZIONE FINALE
MANDO FINAL
SLUTDREV

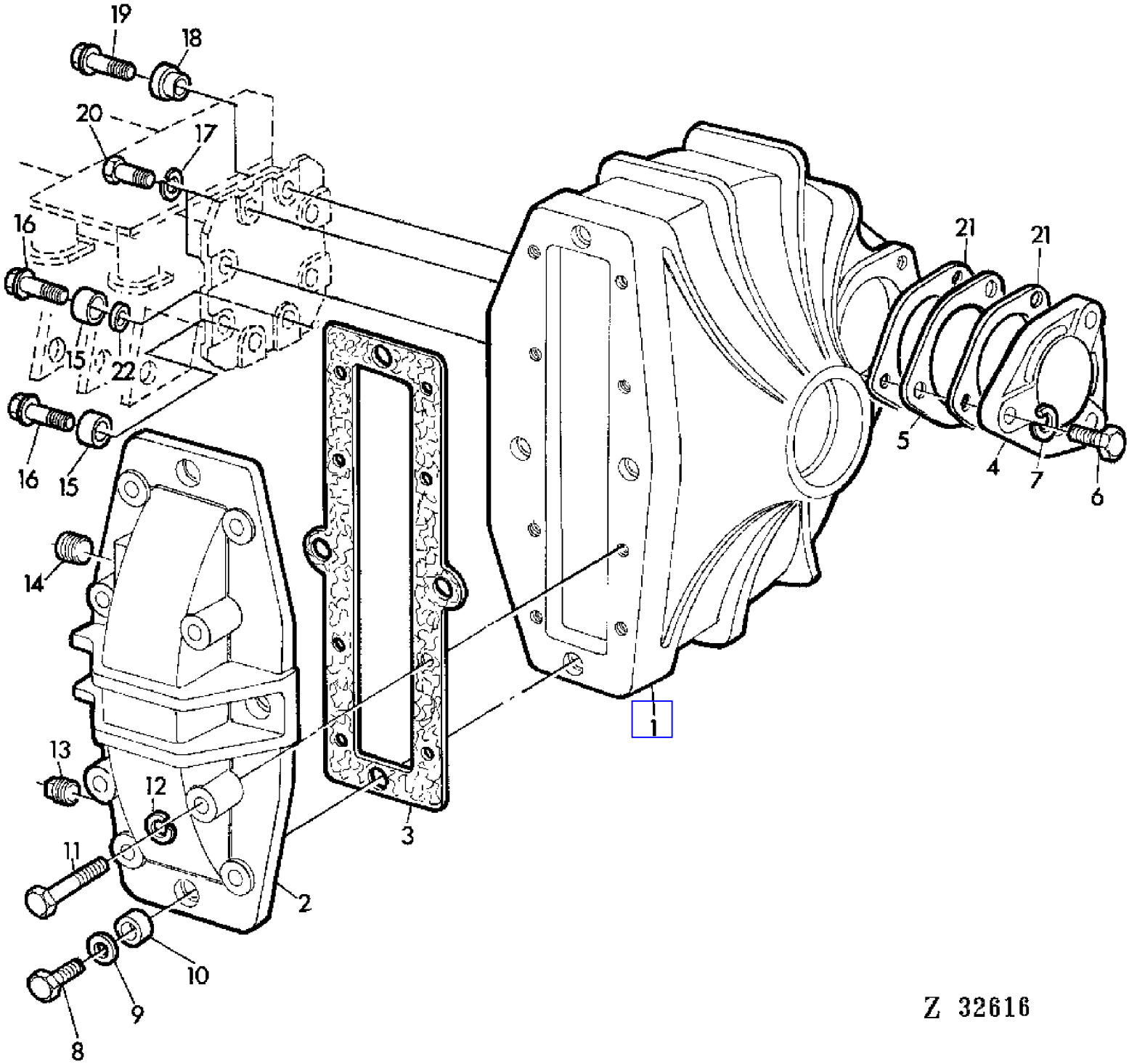

COPYRIGHT©1994 - 2008 DEERE & COMPANY Moline, Illinois All rights reserved

(1I23) FINAL DRIVE
COMMANDES FINALES
ENDANTRIEB
RIDUZIONE FINALE
MANDO FINAL
SLUTDREV

KEY	PART NO.	PART NAME	QTY	SERIAL NO.		975	975HY/4	REMARKS
1	Z10942	HOUSING	2		- 010731	X		(ORD Z11362 W/ Z40239)
	Z11014	HOUSING	2	010732	- XXXX	X	X	(ORD JD8249, Z11362, Z40239)
	Z11362	HOUSING	2	XXXX	-	X	X	(SUB FOR Z10942, Z11014)
2	H10280	COVER	2			X	X	
3	H22782	GASKET	2			X	X	
4	Z10941	QUILL	2			X	X	
5	Z34378	SHIM	AR			X	X	0,13 MM
	Z34377	SHIM	AR			X	X	0,25 MM
	Z34376	SHIM	AR			X	X	0,50 MM
6	19H1821	CAP SCREW	6		- 010731	X		7/16" X 1-1/4"
	19H1773	CAP SCREW	6	010732	-	X	X	7/16" X 1-1/8"
7	H20551	LOCK WASHER	6			X	X	7/16"
8	19H1800	CAP SCREW	16			X	X	3/8" X 1-1/2"
9	E12817	WASHER	8			X	X	
10	H22785	BUSHING	8			X	X	
11	19H2128	CAP SCREW	8			X	X	3/8" X 3"
12	12H304	LOCK WASHER	AR			X	X	3/8"
13	15H255	PIPE PLUG	2			X	X	
14	H22789	PIPE PLUG	2			X	X	
15	Z39560	BUSHING	4			X	X	
16	Z39562	CAP SCREW	4			X	X	
17	12H312	LOCK WASHER	AR			X	X	3/4"
18	Z39355	BUSHING	4			X	X	(SUB FOR Z29008)
19	Z39677	CAP SCREW	2			X	X	
20	19H1374	CAP SCREW	8			X	X	3/4" X 2"
21	Z34380	SHIM	4			X	X	0,08 MM
22	Z39561	BUSHING	2			X	X	

COPYRIGHT©1994 - 2008 DEERE & COMPANY Moline, Illinois All rights reserved

(1I25) FINAL DRIVE (HEAVY DUTY)
COMMANDES FINALES (RENFORCEES)
ENDANTRIEB (VERSTAERKTE AUSFUEHRUNG)
RIDUZIONE FINALE (RINFORZATA)
MANDO FINAL (REFORZADO)
SLUTDREV (FORSTARKT)

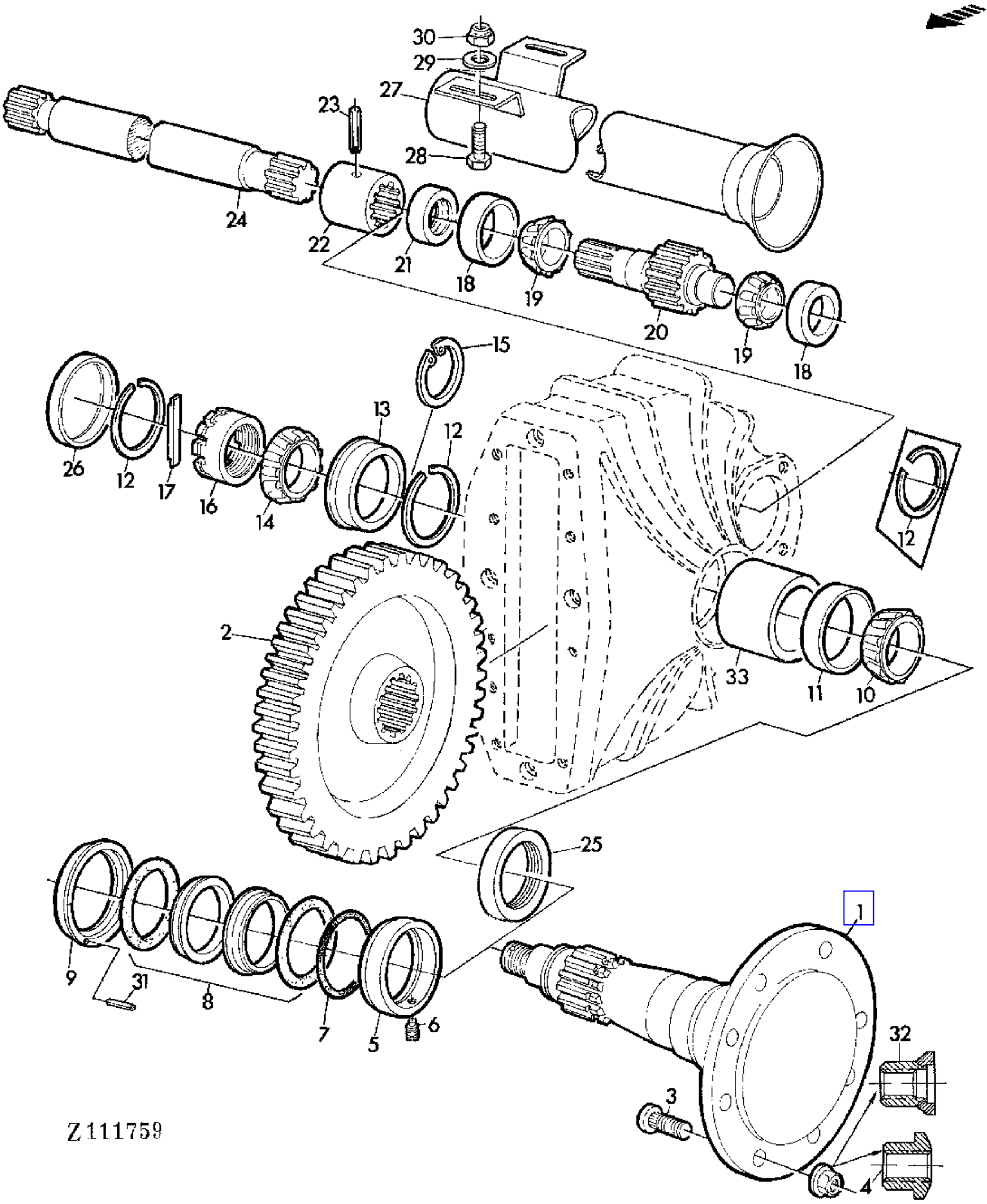

COPYRIGHT©1994 - 2008 DEERE & COMPANY Moline, Illinois All rights reserved

(1I25) FINAL DRIVE (HEAVY DUTY)
COMMANDES FINALES (RENFORCEES)
ENDANTRIEB (VERSTAERKTE AUSFUEHRUNG)
RIDUZIONE FINALE (RINFORZATA)
MANDO FINAL (REFORZADO)
SLUTDREV (FORSTARKT)

KEY	PART NO.	PART NAME	QTY	SERIAL NO.			975	975HY/4	REMARKS
1	Z11404	AXLE	2	010732	-	XXXX	X	X	(ORD Z11791 W/ Z45464) (SUB FOR Z10762)
	Z11791	AXLE	2	XXXX	-		X	X	(SUB FOR Z11404, Z11622)
2	AH66305	GEAR	2		-	010731	X		
	Z11013	GEAR	2	010732	-		X	X	
3	Z36742	WHEEL BOLT	16	010732	-		X	X	(A) (SUB FOR Z34488)
4	14M7237	NUT	16				X	X	(A) M18 X 1,5
5	Z10764	RING	2				X	X	(A)
6	22M7077	SET SCREW	2				X	X	(A)
7	Z31005	O-RING	AR				X	X	(A)
8	AZ19602	SEAL	AR				X	X	(A)
9	Z11535	RING	2				X	X	(A) (SUB FOR Z10763, Z11403)
10	JD8923	BEARING CONE	2	010732	-		X	X	
11	JD8248	BEARING CUP	2	010732	-		X	X	
12	H22784	SNAP RING	6	010732	-		X	X	
13	JD8249	BEARING CUP	2		-	010731	X		
	JD9162	BEARING CUP	2	010732	-	XXXX	X	X	
	JD8249	BEARING CUP	2	XXXX	-		X	X	
14	JD8152	BEARING CONE	2	010732	-		X	X	
15	Z38036	SNAP RING	2	010732	-	XXXX	X	X	(SUB FOR Z35175)
16	H31263	NUT	2	010732	-		X	X	
17	H31264	SHAFT KEY	2	010732	-		X	X	
18	JD7266	BEARING CUP	2				X	X	
19	JD7222	BEARING CONE	4				X	X	
20	H65260	PINION	2		-	016667	X		
	Z11315	PINION	2	016668	-		X	X	(SUB FOR Z11171, Z11271)
21	AH81622	SEAL	2				X	X	(SUB FOR T22069)
22	Z31218	SPACER	4		-	016667	X		
	Z37932	SPLINED COUPLING	4	016668	-		X	X	
23	34H386	SPRING PIN	AR				X	X	1/4" X 2"
24	H36520	DRIVE SHAFT	1		-	016667	X		LH
	Z29011	SHAFT	1		-	016667	X		RH
	Z37937	SHAFT	1	016668	-		X	X	LH, LGTH = 593 MM
	Z37940	SHAFT	1	016668	-		X	X	RH, LGTH = 550 MM
25	AH62106	PACKING	2	010732	-		X	X	
26	H22787	BEARING CAP	2		-	107317	X		
	Z35176	CAP	2	010732	-	XXXX	X	X	
	Z40239	CAP	2	XXXX	-		X	X	
27	AZ24221	GUARD	AR				X	X	LH

(A) WITH RICE TRACKS
AVEC CHENILLES RIZ
BEI REISRAUPEN
CON CINGOLI RISO
CON TREN DE ORUGAS ARROZ
MED RIS-BAND

COPYRIGHT©1994 - 2008 DEERE & COMPANY Moline, Illinois All rights reserved

(1I25) FINAL DRIVE (HEAVY DUTY)
COMMANDES FINALES (RENFORCEES)
ENDANTRIEB (VERSTAERKTE AUSFUEHRUNG)
RIDUZIONE FINALE (RINFORZATA)
MANDO FINAL (REFORZADO)
SLUTDREV (FORSTARKT)

KEY	PART NO.	PART NAME	QTY	SERIAL NO.	975	975HY	REMARKS
	AZ24222	GUARD	AR		X	X	RH
28	19M7167	CAP SCREW	2		X	X	M10 X 25
29	24M7040	WASHER	2		X	X	11 MM
30	14M7167	LOCK NUT	2		X	X	M10
31	34M7010	SPRING PIN	2		X	X	(A) 3 X 18 MM
32	14M7238	FLANGE NUT	16		X	X	M18 X 1,5
33	Z45464	SPACER	2	XXXX -	X	X	(FOR Z11622)

(A) WITH RICE TRACKS
AVEC CHENILLES RIZ
BEI REISRAUPEN
CON CINGOLI RISO
CON TREN DE ORUGAS ARROZ
MED RIS-BAND

COPYRIGHT©1994 - 2008 DEERE & COMPANY Moline, Illinois All rights reserved

(4A19) FINGER GRATE
PEIGNES
FINGERRECHEN
RASTRELLO A DENTI
RASTRILLO DE PUAS
FINGERBALK

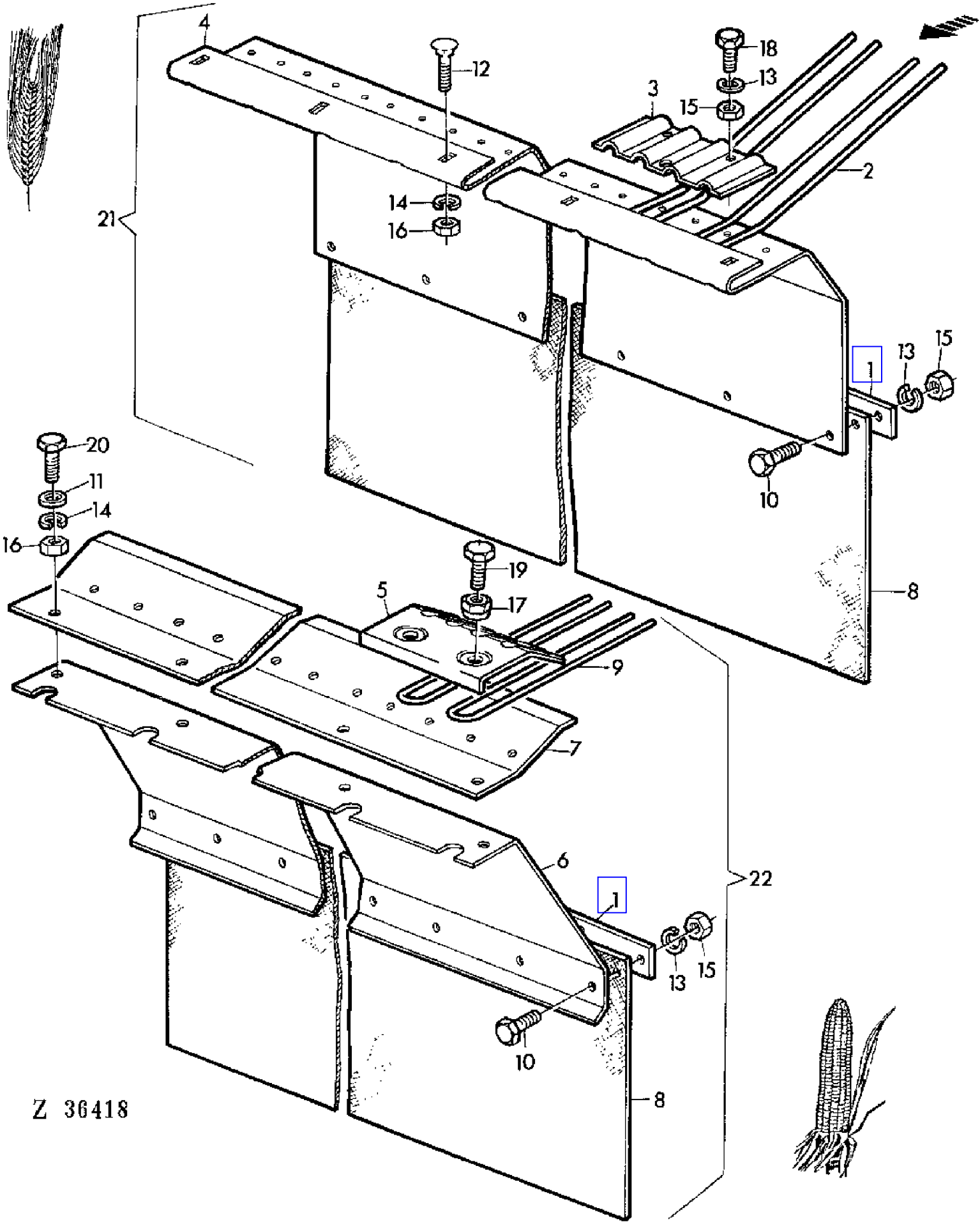

COPYRIGHT©1994 - 2008 DEERE & COMPANY Moline, Illinois All rights reserved

(4A19) FINGER GRATE
PEIGNES
FINGERRECHEN
RASTRELLO A DENTI
RASTRILLO DE PUAS
FINGERBALK

KEY	PART NO.	PART NAME	QTY	SERIAL NO.	975	975HY/4	REMARKS
1	Z22768	STRIPPER	1		X	X	
2	Z20073	TINE	30		X	X	
3	Z20074	RETAINER	15		X	X	
4	Z35186	SHEET	1		X	X	
5	Z29341	RETAINER	10		X	X	
6	Z35183	SHEET	1		X	X	
7	Z29410	SHEET	1		X	X	
8	Z35498	LIMIT CURTAIN	1		X	X	(SUB FOR Z30190)
9	Z31009	TINE	20		X	X	(SUB FOR Z30190)
10	19M7375	CAP SCREW	AR		X	X	M6 X 18 (ORD Z30190)
11	L19008	WASHER	AR		X	X	
12	03M7085	BOLT	AR		X	X	M10 X 30
13	12M7012	LOCK WASHER	AR		X	X	6 MM
14	12M7013	LOCK WASHER	AR		X	X	10 MM
15	14M7027	NUT	AR		X	X	M6
16	14M7140	NUT	AR		X	X	M10
17	14M7166	LOCK NUT	AR		X	X	M8
18	19M7159	CAP SCREW	AR		X	X	M6 X 16
19	19M7139	CAP SCREW	AR		X	X	M8 X 20
20	19M7169	CAP SCREW	AR		X	X	M10 X 35
21	.....	GUARD	1		X	X	(A)
22	.....	GUARD	1		X	X	(A)

(A) 21 CAN BE COMPLETELY REPLACED BY 22
21 PEUT ETRE COMPLETEMENT REMPLACE PAR 22
21 KANN KOMPLETT DURCH DIE EINZELTEILE VON 22 ERSETZT WERDEN
21 PUO ESSERE SOSTITUITO TOTALMENTE DA 22
21 PUEDE CAMBIARSE COMPLETAMENTE POR 22
21 KAN HELT BYTAS UT MOT 22

COPYRIGHT©1994 - 2008 DEERE & COMPANY Moline, Illinois All rights reserved

(3E20) FLOOR PANEL FOR FEEDER CONVEYOR
TOLE DE FOND POUR CONVOYEUR D'ALIMENTATION
BODENBLECH FUER SCHRAEGFOERDERER
LAMIERA DI FONDO PER COLLO ALIMENTATORE
PANEL INFERIOR PARA EL ELEVADOR DE MIES
BOTTENPLAT FOR INMATNINGSELEVATOR

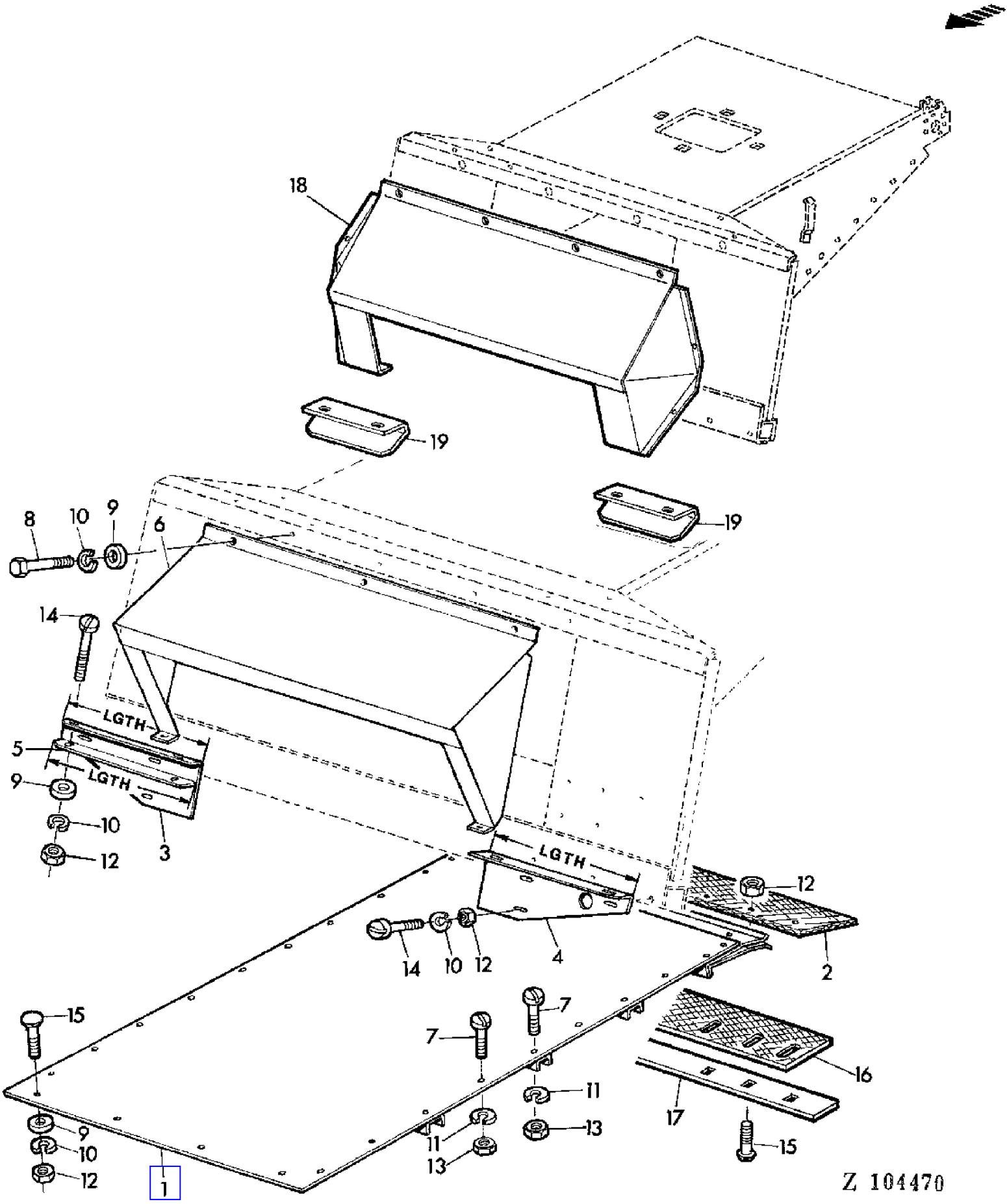

COPYRIGHT©1994 - 2008 DEERE & COMPANY Moline, Illinois All rights reserved

(3E20) FLOOR PANEL FOR FEEDER CONVEYOR
TOLE DE FOND POUR CONVOYEUR D'ALIMENTATION
BODENBLECH FUER SCHRAEGFOERDERER
LAMIERA DI FONDO PER COLLO ALIMENTATORE
PANEL INFERIOR PARA EL ELEVADOR DE MIES
BOTTENPLAT FOR INMATNINGSELEVATOR

KEY	PART NO.	PART NAME	QTY	SERIAL NO.		975	975HY/4	REMARKS
1	AZ18681	SHEET	1		- 010731	X		
	AZ19472	SHEET	1		- 010731	X		(A)
	AZ24760	SHEET	1	010732	- 013567	X		(A)
	AZ24759	SHEET	1	010732	- 026722	X	X	
	AZ25937	SHEET	1	013568	- 025572	X	X	(A)
	AZ28852	SHEET	1	025573	-	X	X	(A)
	AZ18681	SHEET	1	026723	-	X	X	
2	Z32145	WEATHERSTRIP	1			X	X	
3	Z36969	BRACKET	1			X	X	AR, LGTH = 236 MM
	Z30144	STRIPPER	1			X	X	AR, LGTH = 276 MM
4	Z36968	BRACKET	1			X	X	AR, LGTH = 236 MM
	Z30143	STRIPPER	1			X	X	AR, LGTH = 276 MM
5	Z36964	BRACKET	1			X	X	AR, LGTH = 236 MM
	Z30525	STRAP	2			X	X	AR, LGTH = 276 MM
6	AZ21483	SHIELD	1			X	X	AR (ORD AZ33609, Z30143, Z30144, Z30525 (2)
7	21M7090	SCREW	AR			X	X	M10 X 25
8	19M7284	CAP SCREW	4			X	X	M8 X 18
9	24M7036	WASHER	AR			X	X	9 MM
10	12M7008	LOCK WASHER	AR			X	X	8 MM
11	12M7013	LOCK WASHER	AR			X	X	10 MM
12	14M7029	NUT	AR			X	X	M8
13	14M7140	NUT	AR			X	X	M10
14	21M7160	SCREW	AR			X	X	M8 X 18
15	03M7069	BOLT	AR			X	X	M8 X 35
16	Z38634	BOOT	1		- 026722	X	X	
	Z38634	BOOT	1		- 025572	X	X	(A)
17	Z39210	HOLDER	1		- 026722	X	X	(SUB FOR Z38637)
	Z39210	HOLDER	1		- 025572	X	X	(A)
18	AZ33609	SHIELD	1			X	X	(SUB FOR AZ21483, APPL)
19	Z43555	STRIPPER	2			X	X	

(A) FOR FEEDER CONVEYOR LONG
POUR CONVOYEUR D'ALIMENTATION LONG
FUER LANGEN SCHRAEGFOERDERER
PER COLLO ALIMENTATORE LUNGO
PARA ELEVADOR DE MIES LARGO
FOR LANG INMATNINGSELEVATOR

COPYRIGHT©1994 - 2008 DEERE & COMPANY Moline, Illinois All rights reserved

(2F12) FLOOR PANELS,ENGINE COMPARTMENT
FOND DU COMPARTIMENT MOTEUR
MOTOR-BODENBLECHE
LAMIERE DI FONDO DEL MOTORE
CHAPAS DE FONDO DEL COMPARTIMENTO DEL MOTOR
BOTTENPLATAR,MOTOR

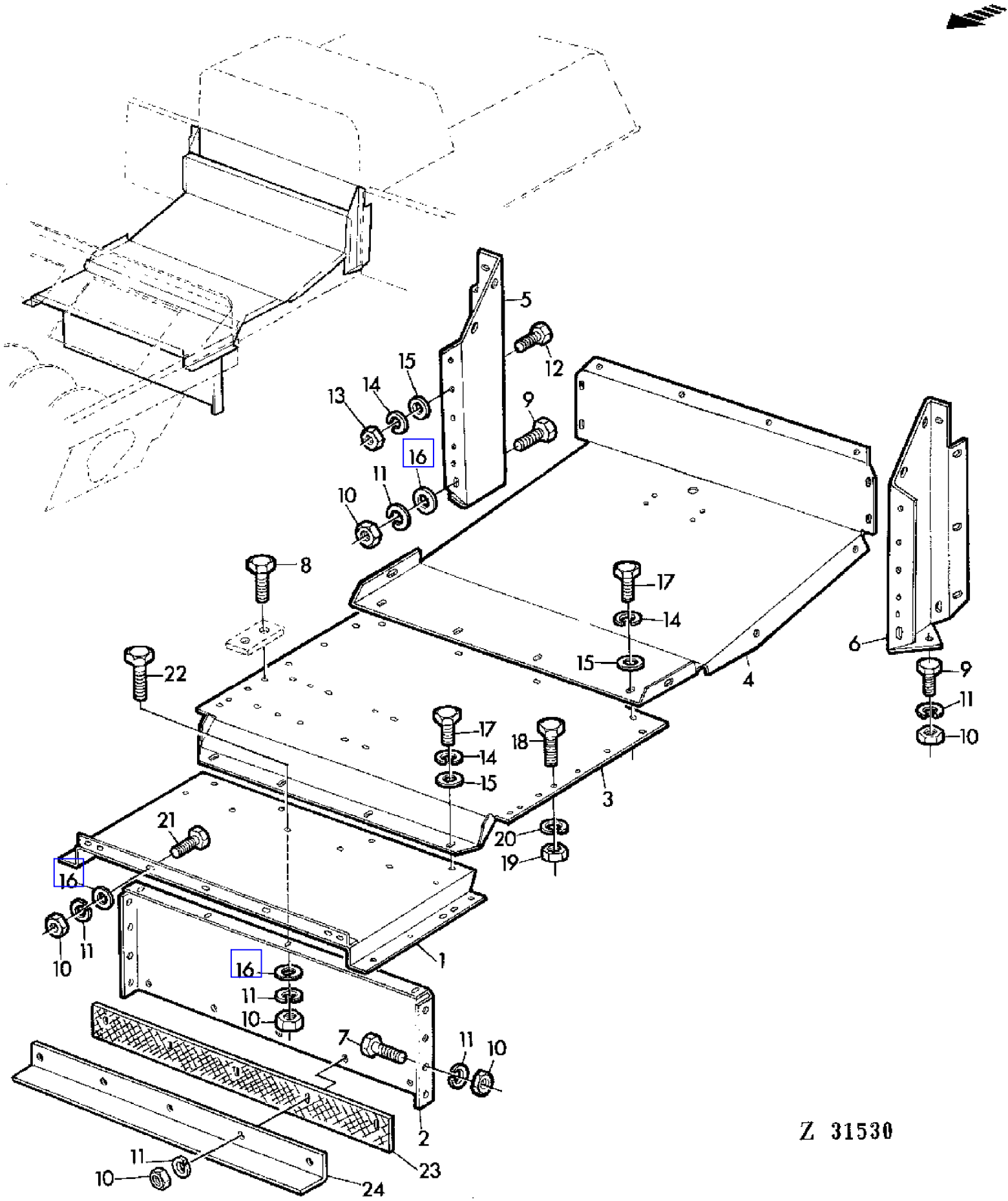

COPYRIGHT©1994 - 2008 DEERE & COMPANY Moline, Illinois All rights reserved

(2F12) FLOOR PANELS,ENGINE COMPARTMENT
FOND DU COMPARTIMENT MOTEUR
MOTOR-BODENBLECHE
LAMIERE DI FONDO DEL MOTORE
CHAPAS DE FONDO DEL COMPARTIMENTO DEL MOTOR
BOTTENPLATAR,MOTOR

KEY	PART NO.	PART NAME	QTY	SERIAL NO.	975	975HY/4	REMARKS
1	AZ22708	SHEET	1		X	X	
2	Z33745	SUPPORT	1		X	X	
3	AZ23739	SHEET	1		X	X	
4	AZ23172	SHEET	1		X	X	
5	Z33315	REINFORCEMENT	1		X	X	
6	Z33316	HOLDER	1		X	X	
7	19M7139	CAP SCREW	AR		X	X	M8 X 20
8	19M7167	CAP SCREW	AR		X	X	M10 X 25
9	19M7163	CAP SCREW	AR		X	X	M8 X 25
10	14M7029	NUT	AR		X	X	M8
11	12M7008	LOCK WASHER	AR		X	X	8 MM
12	19M7375	CAP SCREW	AR		X	X	M6 X 18
13	14M7027	NUT	AR		X	X	M6
14	12M7012	LOCK WASHER	AR		X	X	6 MM
15	24M7088	WASHER	AR		X	X	6,6 MM
16	24M7036	WASHER	AR		X	X	9 MM
17	19M6614	CAP SCREW	AR		X	X	M6 X 12
18	19M7166	CAP SCREW	AR		X	X	M10 X 20
19	14M7140	NUT	AR		X	X	M10
20	12M7013	LOCK WASHER	AR		X	X	10 MM
21	19M7162	CAP SCREW	AR		X	X	M8 X 16
22	19M7284	CAP SCREW	AR		X	X	M8 X 18
23	Z23034	GASKET	1		X	X	
24	Z23033	ANGLE	1		X	X	

COPYRIGHT©1994 - 2008 DEERE & COMPANY Moline, Illinois All rights reserved

(1B02) FLYWHEEL AND FLYWHEEL HOUSING
VOLANT ET CARTER VOLANT
SCHWUNGRAD UND SCHWUNGRADGEHAEUSE
VOLANO E CARTER VOLANO
VOLANTE Y CARCASA
SVANGHJUL OCH SVANGHJULSKAPA

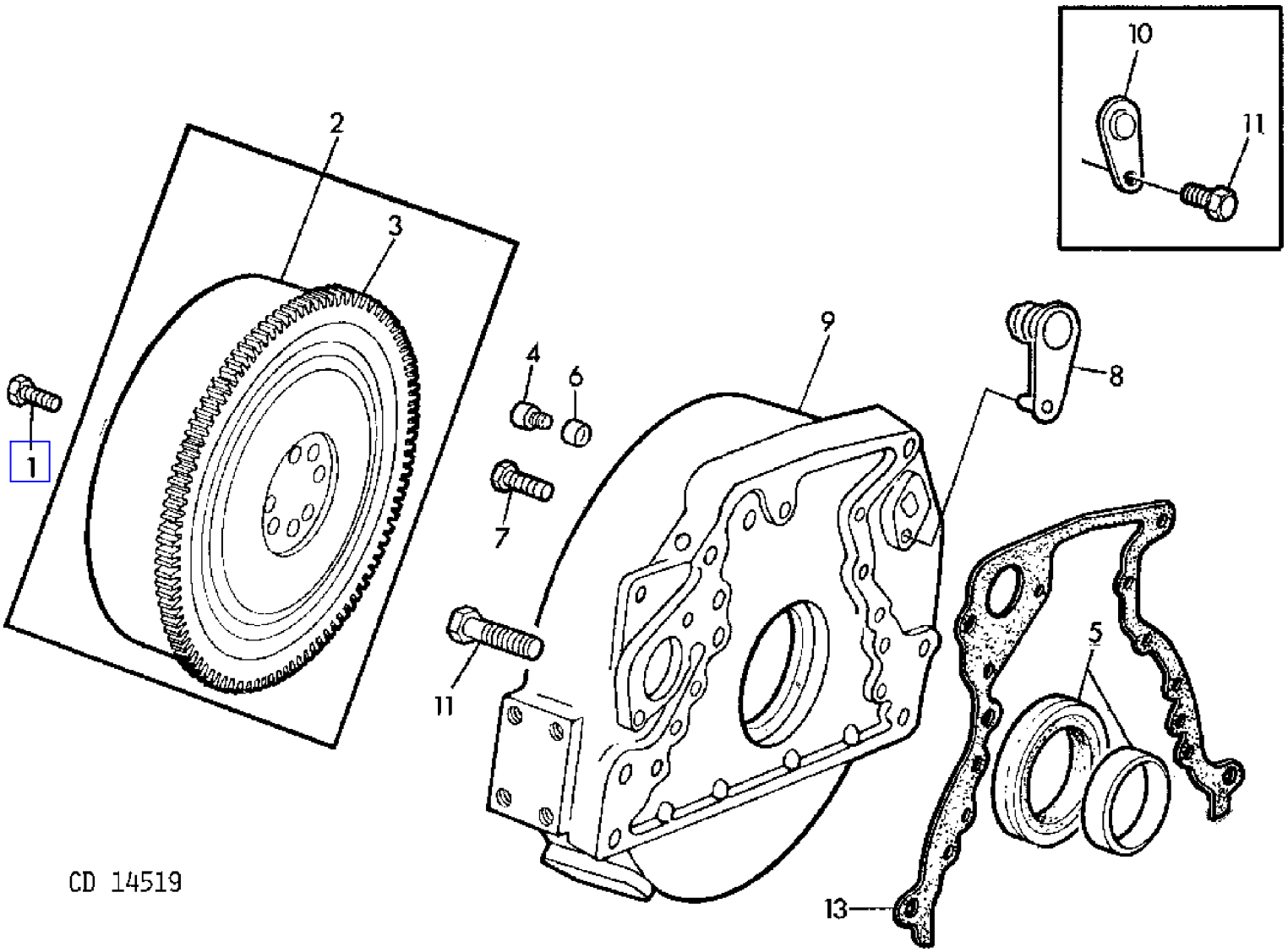

COPYRIGHT©1994 - 2008 DEERE & COMPANY Moline, Illinois All rights reserved

(1B02) FLYWHEEL AND FLYWHEEL HOUSING
VOLANT ET CARTER VOLANT
SCHWUNGRAD UND SCHWUNGRADGEHAEUSE
VOLANO E CARTER VOLANO
VOLANTE Y CARCASA
SVANGHJUL OCH SVANGHJULSKAPA

KEY	PART NO.	PART NAME	QTY	ENGINE SERIAL NO.		975	975HY/4	REMARKS
1	T20139	CAP SCREW	4		- 333624	X		(ORD (4) 19H2993)
	19H2993	CAP SCREW	4	333625	-	X	X	1/2" X 1-1/2"
2	AT18132	FLYWHEEL	1			X	X	ASSY
3	T20088	GEAR	1			X	X	Z = 142
4	22H1035	SET SCREW	AR			X		5/8" X 1/2"
5	RE11036	SEAL	1			X	X	(SUB FOR AR92893, AT22965)
6	T23433	CAP	AR			X		(W/ T25114)
7	19H2545	CAP SCREW	8			X	X	3/8" X 1-3/8" (SUB FOR 12H304, 19H1800)
8	R83555	PLUG	AR			X	X	
9	R64100	HOUSING	1			X	X	(SUB FOR T25114)
10	T20089	COVER	1			X	X	(ORD R83555)
11	19H1439	CAP SCREW	2			X	X	UP, 5/8" X 3"
	19H1923	CAP SCREW	2			X	X	LOW, 5/8" X 5-1/2"
12	19H2351	CAP SCREW	1			X	X	1/2" X 1/2" (FOR T20089)
13	R70483	GASKET	1			X	X	(SUB FOR R49516)

COPYRIGHT©1994 - 2008 DEERE & COMPANY Moline, Illinois All rights reserved

(2A17) FOOT PEDALS-BRAKE
PEDALE-FREIN
FUSSHEBEL-BREMSE
PEDALE-FRENI
PEDALES-FRENO
PEDALER-BROMS

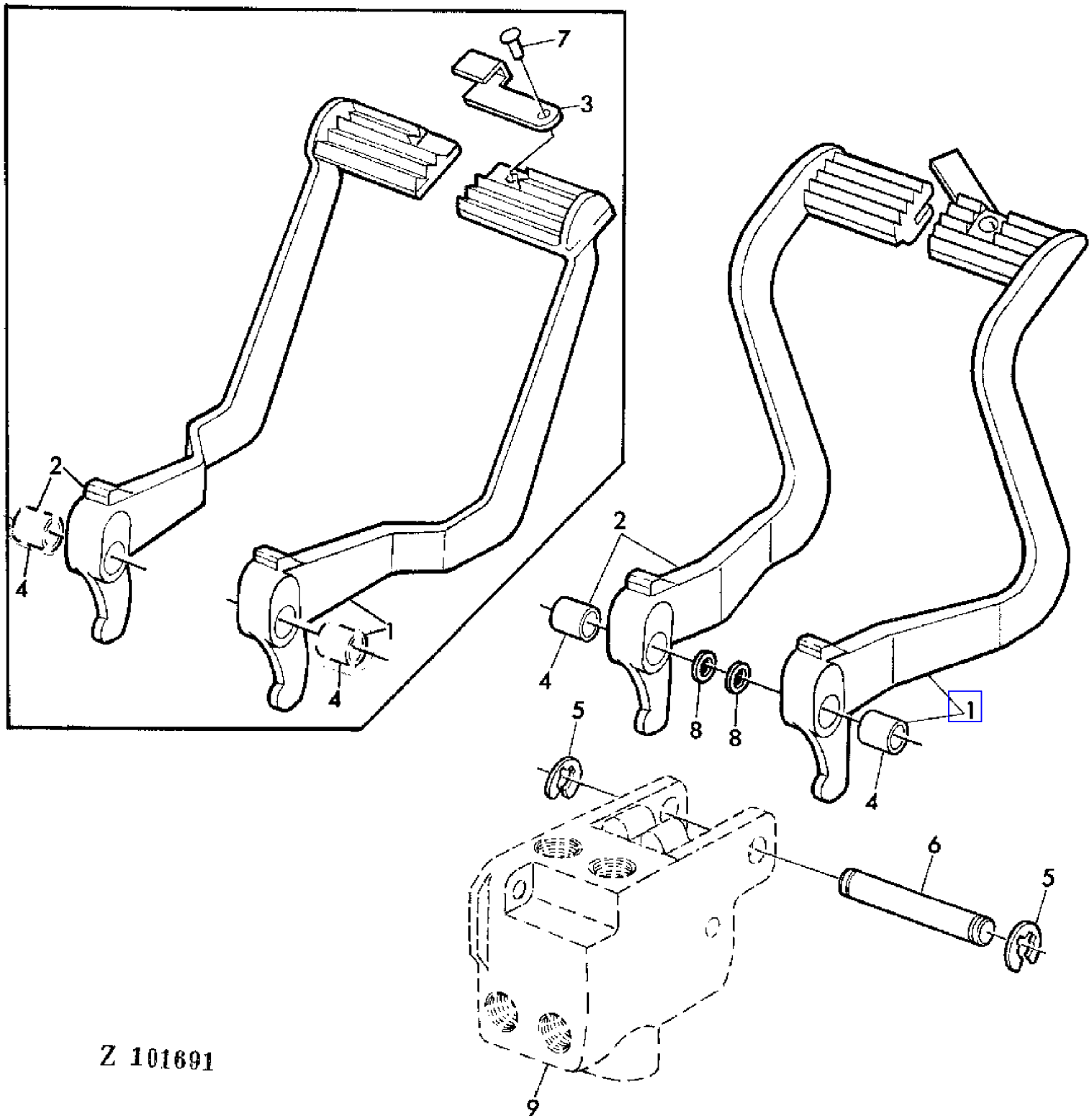

COPYRIGHT©1994 - 2008 DEERE & COMPANY Moline, Illinois All rights reserved

(2A17) FOOT PEDALS-BRAKE
PEDALE-FREIN
FUSSHEBEL-BREMSE
PEDALE-FRENI
PEDALES-FRENO
PEDALER-BROMS

KEY	PART NO.	PART NAME	QTY	SERIAL NO.		975	975HY	REMARKS
1	AZ14582	PEDAL	1		- 026722	X	X	ASSY, INCL KEY 3,4,7
	AZ28883	PEDAL	1	026723	-	X	X	INCL KEY 4
2	AZ14821	PEDAL	1		- 026722	X	X	ASSY, INCL KEY 4
	AZ28884	PEDAL	1	026723	-	X	X	INCL KEY 4
3	Z21757	LEVER	1		- 026722	X	X	
4	B177	BUSHING	2			X	X	
5	F2863R	SNAP RING	2			X	X	
6	T49189	PIN	1			X	X	(SUB FOR T21803)
7	16M2549	RIVET	1		- 026722	X	X	8 X 25 MM
8	Z27188	SHIM	AR			X	X	
9	.....	HOUSING	1			X	X	SECTION 70

COPYRIGHT©1994 - 2008 DEERE & COMPANY Moline, Illinois All rights reserved

(3D01) FRAME AND MOUNTING PARTS-AIR CONDITIONED CAB
BATIET PIECES DE MONTAGE-CABINE CLIMATISEE
RAHMEN UND ANBAUTEILE-KABINE MIT KLIMAANLAGE
TELAIO E PARTI MONTAGGIO-CABINA CONDIZIONATA
BASTIDOR Y PIEZAS DE MONTAJE-CABINA CON AIRE ACONDICIONADO
RAM OCH MONTERINGSDETALJER-HYTT MED LUFTKONDITIONERING

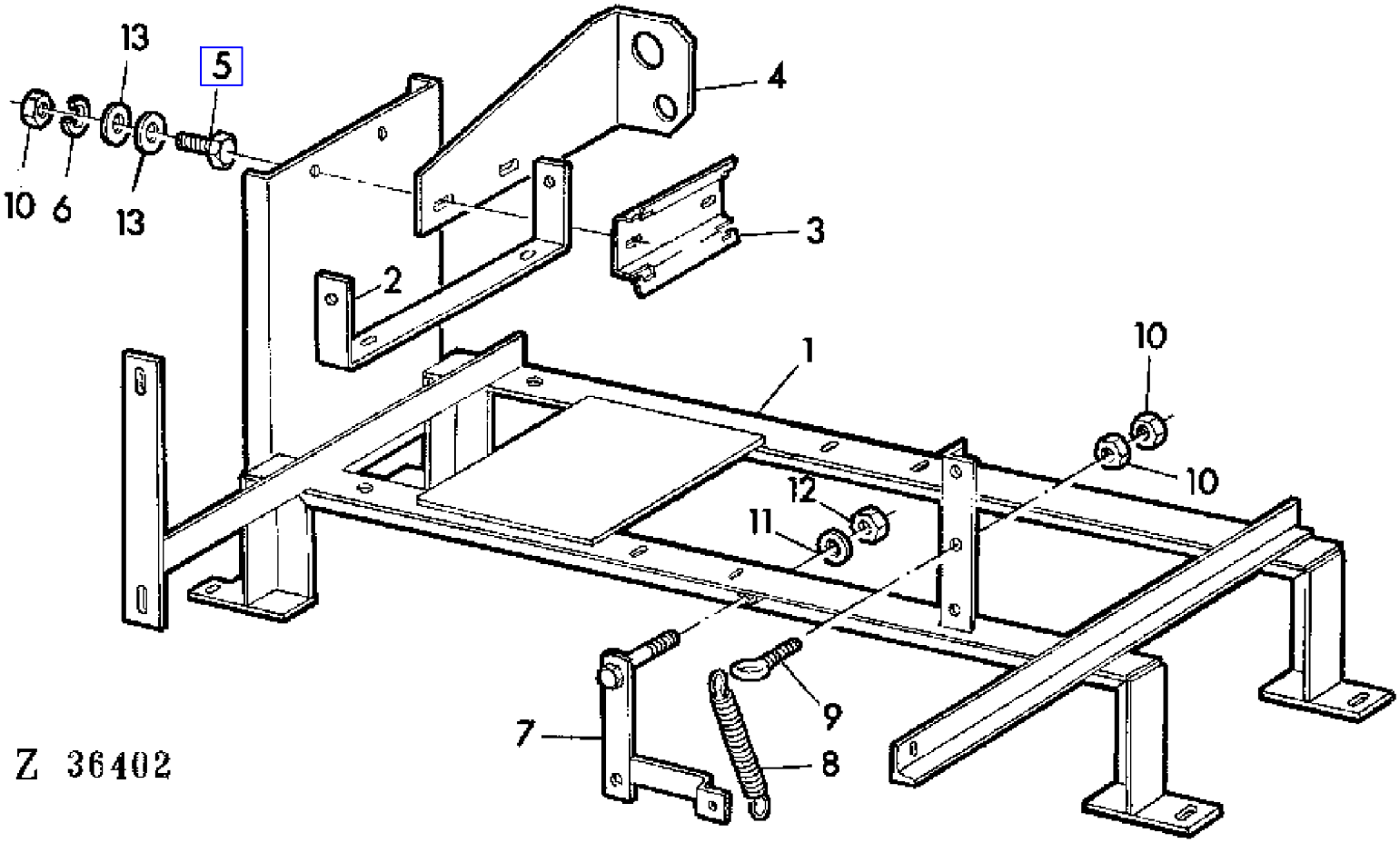

COPYRIGHT©1994 - 2008 DEERE & COMPANY Moline, Illinois All rights reserved

(3D01) FRAME AND MOUNTING PARTS-AIR CONDITIONED CAB
BATIET PIECES DE MONTAGE-CABINE CLIMATISEE
RAHMEN UND ANBAUTEILE-KABINE MIT KLIMAANLAGE
TELAIO E PARTI MONTAGGIO-CABINA CONDIZIONATA
BASTIDOR Y PIEZAS DE MONTAJE-CABINA CON AIRE ACONDICIONADO
RAM OCH MONTERINGSDETALJER-HYTT MED LUFTKONDITIONERING

KEY	PART NO.	PART NAME	QTY	SERIAL NO.	975	975HY	REMARKS
1	DA23479	SUPPORT	1		X	X	
2	CA20513	HOLDER	1		X	X	
3	H87092	SUPPORT	1		X	X	
4	CA20541	HOLDER	1		X	X	
5	19M7139	CAP SCREW	AR		X	X	M8 X 20
6	12H303	LOCK WASHER	7		X	X	5/16"
7	DA20515	LEVER	1		X	X	
8	L19219	SPRING	7		X	X	5/16"
9	L20612	EYEBOLT	1		X	X	
10	14M7029	NUT	AR		X	X	M8
11	24M7040	WASHER	AR		X	X	11 MM
12	14M7167	LOCK NUT	AR		X	X	M10
13	24M7036	WASHER	AR		X	X	9 MM

COPYRIGHT©1994 - 2008 DEERE & COMPANY Moline, Illinois All rights reserved

(1J01) FRONT AXLE
ESSIEU AVANT
VORDERACHSE
ASSALE ANTERIORE
EJE DELANTERO
FRAMAXEL

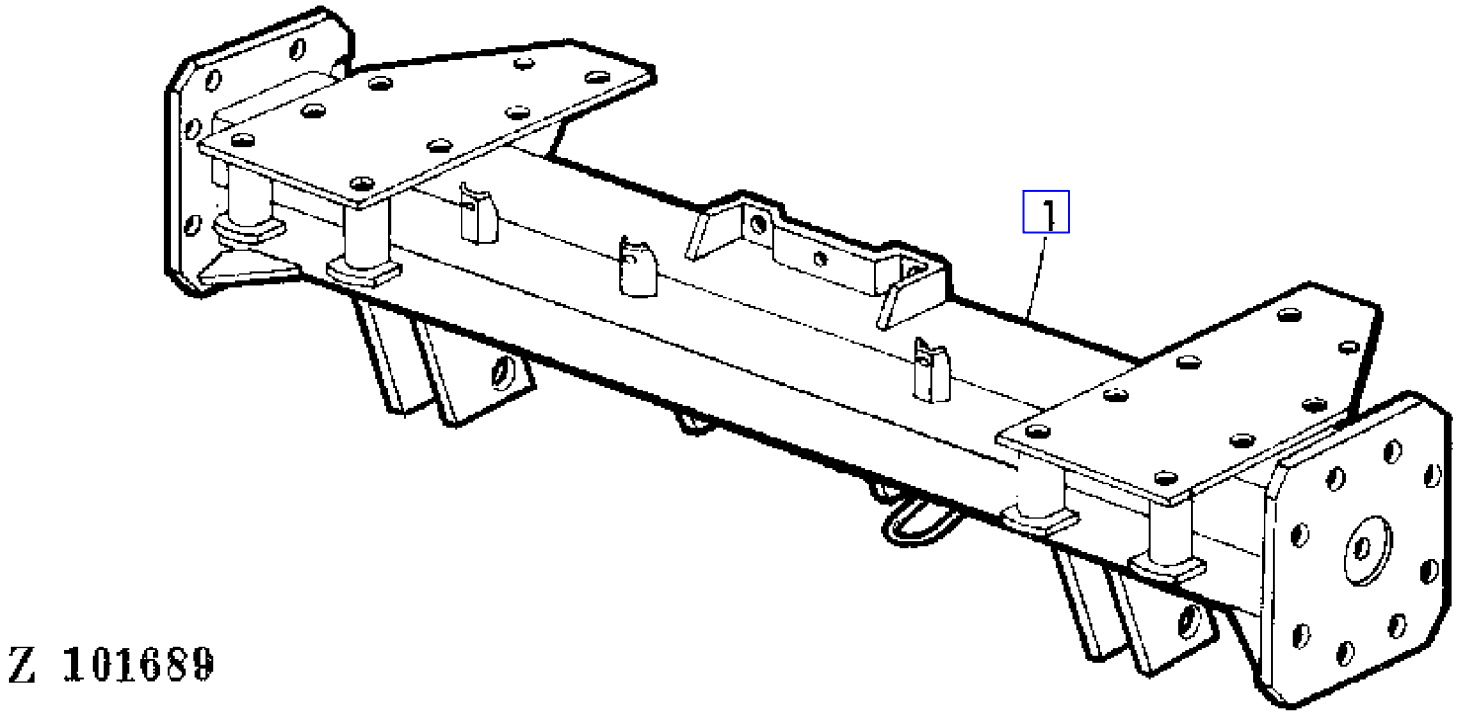

COPYRIGHT©1994 - 2008 DEERE & COMPANY Moline, Illinois All rights reserved

(1J01) FRONT AXLE
ESSIEU AVANT
VORDERACHSE
ASSALE ANTERIORE
EJE DELANTERO
FRAMAXEL

KEY	PART NO.	PART NAME	QTY	SERIAL NO.	975	975HY/4	REMARKS
1	AZ32626	FRONT AXLE	1		X	X	(ORD W/ (2) Z39561, (4) Z41021, (4) Z41022) (SUB FOR AZ22765)

COPYRIGHT©1994 - 2008 DEERE & COMPANY Moline, Illinois All rights reserved

(2E16) FRONT AXLE SUPPORT BRACKETS
SUPPORTS D'ESSIEU AVANT
VORDERACHSKONSOLE
SUPPORTI DELL'ASSALE ANTERIORE
EJE DELANTERO,SOPORTES DE APOYO
FRAMAXELFASTE

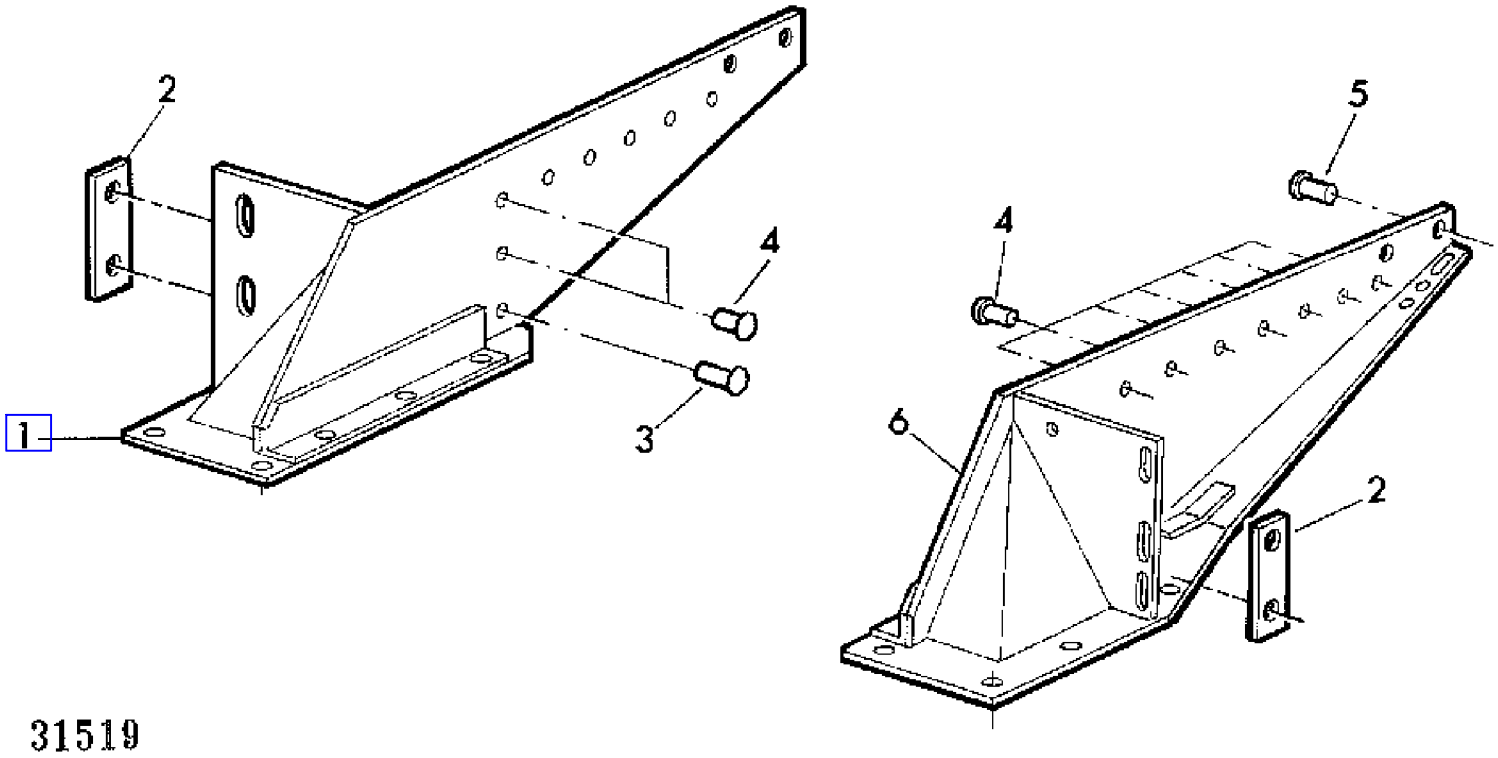

COPYRIGHT©1994 - 2008 DEERE & COMPANY Moline, Illinois All rights reserved

(2E16) FRONT AXLE SUPPORT BRACKETS
SUPPORTS D'ESSIEU AVANT
VORDERACHSKONSOLE
SUPPORTI DELL'ASSALE ANTERIORE
EJE DELANTERO,SOPORTES DE APOYO
FRAMAXELFASTE

KEY	PART NO.	PART NAME	QTY	SERIAL NO.	975	975HY/4	REMARKS
1	AZ29728	BRACKET	1		X	X	RH (SUB FOR AZ22739)
2	Z33827	PLATE	2		X	X	
3	16M1533	RIVET	AR		X	X	10 X 38 MM
4	16M1529	RIVET	AR		X	X	10 X 30 MM
5	16M1530	RIVET	AR		X	X	10 X 32 MM
6	AZ29729	BRACKET	1		X	X	LH (SUB FOR AZ22740)

COPYRIGHT©1994 - 2008 DEERE & COMPANY Moline, Illinois All rights reserved

(3C02) FRONT FRAME
BATIAVANT
FRONTRAHMEN
TELAIO ANTERIORE
BASTIDOR DELANTERO
FRAMSTYCKE

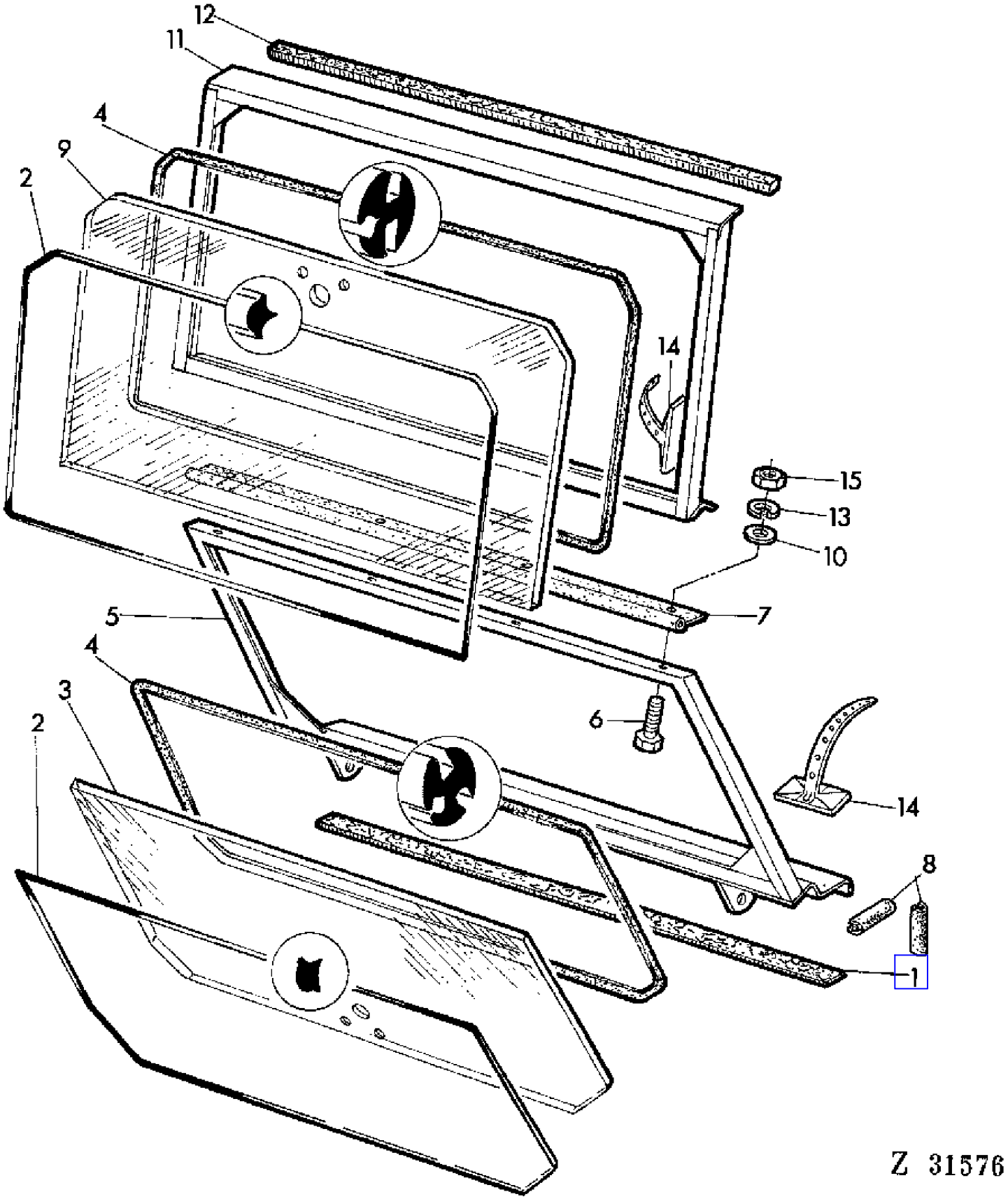

COPYRIGHT©1994 - 2008 DEERE & COMPANY Moline, Illinois All rights reserved

(3C02) FRONT FRAME
BATIAVANT
FRONTRAHMEN
TELAIO ANTERIORE
BASTIDOR DELANTERO
FRAMSTYCKE

KEY	PART NO.	PART NAME	QTY	SERIAL NO.	975	975HY/4	REMARKS
1	CA19553	WEATHERSTRIP	1		X	X	LGTH = 1240 MM (20 X 8 MM)
2	CA19405	WEATHERSTRIP	1		X	X	LGTH = 4330 MM
3	CA19410	WINDOWPANE	1		X	X	
	CA23645	WINDSHIELD	1		X	X	(A)
4	CA19404	GASKET	1		X	X	LGTH = 4330 MM
5	DA19320	FRAME	1		X	X	
6	19M7167	CAP SCREW	4		X	X	10 X 25 MM
7	CA19556	WEATHERSTRIP	1		X	X	LGTH = 1295 MM
8	CA19921	GASKET	2		X	X	
9	CA19403	WINDOWPANE	1		X	X	
	CA23644	WINDSHIELD	1		X	X	(A)
10	24M7040	WASHER	4		X	X	11 MM
11	DA19315	FRAME	1		X	X	
12	CA19606	WEATHERSTRIP	1		X	X	LGTH = 1295 MM
13	12M7013	LOCK WASHER	4		X	X	10 MM
14	Z36647	CLAMP	7		X	X	
15	14M7140	NUT	4		X	X	M10 |

(A) TINTED GLASS
VERRE TEINTE
GETOENTES GLAS
CRISTALLO TINTEGGIATO
CRISTAL TINTURADO
FARGAD RUTOR

COPYRIGHT©1994 - 2008 DEERE & COMPANY Moline, Illinois All rights reserved

(1J02) FRONT WHEELS
ROUES AVANT
VORDERRAEDER
RUOTE ANTERIORI
RUEDAS DELANTERAS
FRAMHJULSENHET

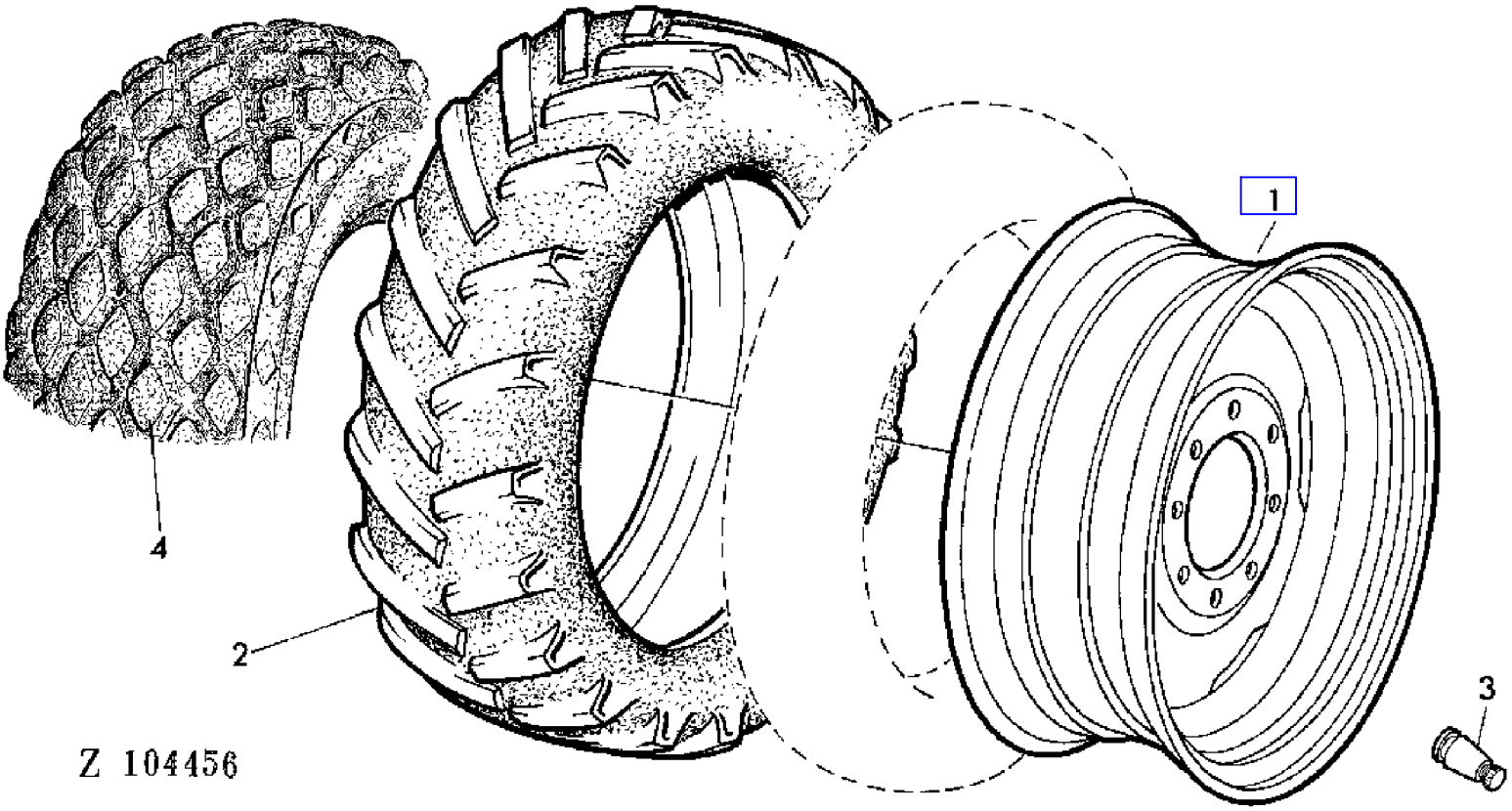

COPYRIGHT©1994 - 2008 DEERE & COMPANY Moline, Illinois All rights reserved

(1J02) FRONT WHEELS
ROUES AVANT
VORDERRAEDER
RUOTE ANTERIORI
RUEDAS DELANTERAS
FRAMHJULSENHET

KEY	PART NO.	PART NAME	QTY	SERIAL NO.	975	975HY/4	REMARKS
1	AZ34179	RIM	2		X	X	DW 14 X 30 (SUB FOR AZ23130)
	AZ34180	RIM	2		X	X	DW 20 X 26 (SUB FOR AZ22937)
	AZ34181	RIM	2		X	X	DW 25 X 26 (SUB FOR AZ27449)
2	.....	TIRE	2		X		(A) 23,1/18 X 26 10PR
	.....	TIRE	2		X		18,4 - 30 14PR
	.....	TIRE	2		X		28,1 - 26 12PR
	.....	TIRE	2		X	X	18,4/15 - 30 12PR
	.....	TIRE	2		X	X	23,1/18 - 26 10PR
	.....	TIRE	2		X	X	23,1/18 - 26 12PR
	.....	TIRE	2		X	X	(A) 28,1 - 26 10PR
3	AZ16587	TIRE VALVE STEM	2		X	X	

(A) FOR RICE ATTACHEMENT
POUR EQUIPEMENT RIZ
FUER REISAUSRUESTUNG
PER ATTREZZATURE DA RISO
PARA EQUIPO DE ARROZ
FOR RISTILLBEHOER

COPYRIGHT©1994 - 2008 DEERE & COMPANY Moline, Illinois All rights reserved

(1D14) FUEL FILTER
FILTRE A COMBUSTIBLE
KRAFTSTOFF-FILTER
FILTRO DEL COMBUSTIBILE
FILTRO DE COMBUSTIBLE
BRANSLEFILTER

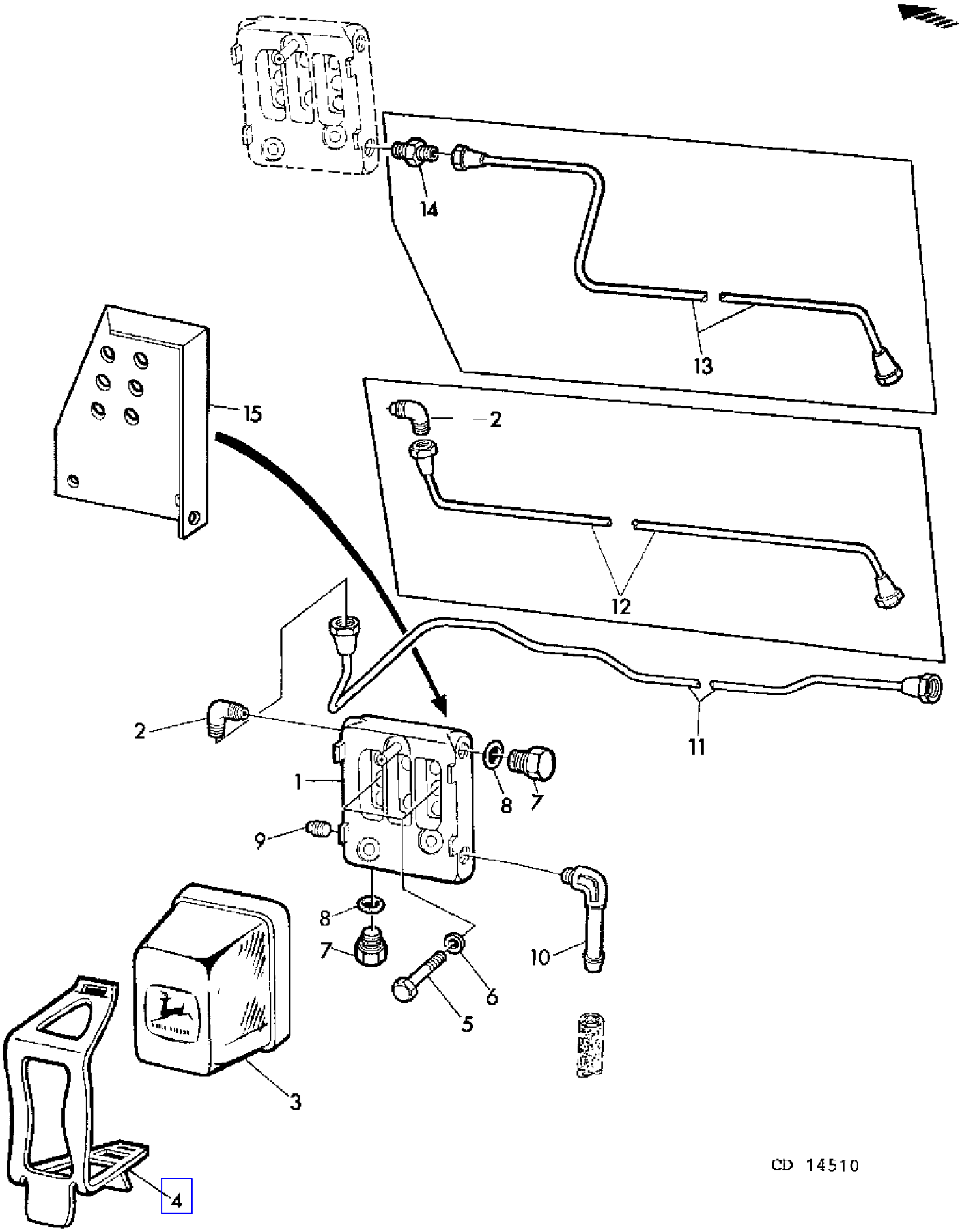

COPYRIGHT©1994 - 2008 DEERE & COMPANY Moline, Illinois All rights reserved

(1D14) FUEL FILTER
FILTRE A COMBUSTIBLE
KRAFTSTOFF-FILTER
FILTRO DEL COMBUSTIBILE
FILTRO DE COMBUSTIBLE
BRANSLEFILTER

KEY	PART NO.	PART NAME	QTY	ENGINE SERIAL NO.			975	975HY/4	REMARKS
1	AR50040	HOUSING	1				X	X	(ORD RE28535, 15H558)
	RE28535	HOUSING	AR				X	X	
2	R82131	ELBOW FITTING	2		-	324804	X		(SUB FOR T30738)
	R82131	ELBOW FITTING	1	324805	-		X	X	(SUB FOR T30738)
3	AR50041	FUEL FILTER	1				X	X	
4	R66821	CLAMP	1				X	X	(SUB FOR R57258)
5	19H1731	CAP SCREW	2				X	X	3/8" X 1"
6	24H1303	WASHER	2				X	X	13/32" X 11/16" X .060"
7	R48071	DRAIN PLUG	2				X	X	
8	R26287	O-RING	2				X	X	
9	15H558	PIPE PLUG	1				X	X	
10	R61356	ELBOW FITTING	1	377810	-		X	X	
11	RE26983	FUEL LINE	1				X	X	(SUB FOR AR71070)
12	AR63953	FUEL LINE	1		-	324804	X		(ORD AR84732 W/ R27347)
13	AR84732	FUEL LINE	1	324805	-	377809	X		
14	R27346	FITTING	1	324805	-	377809	X		
15	CD16159	BRACKET	1				X	X	(SUB FOR R75699)

COPYRIGHT©1994 - 2008 DEERE & COMPANY Moline, Illinois All rights reserved

(1D23) FUEL INJECTION NOZZLE "STANADYNE"
INJECTEUR "STANADYNE"
KRAFTSTOFF-EINSPRITZDUESE "STANADYNE"
INIETTORE "STANADYNE"
INYECTOR DE COMBUSTIBLE "STANADYNE"
BRANSLEINSPRUTARE "STANADYNE"

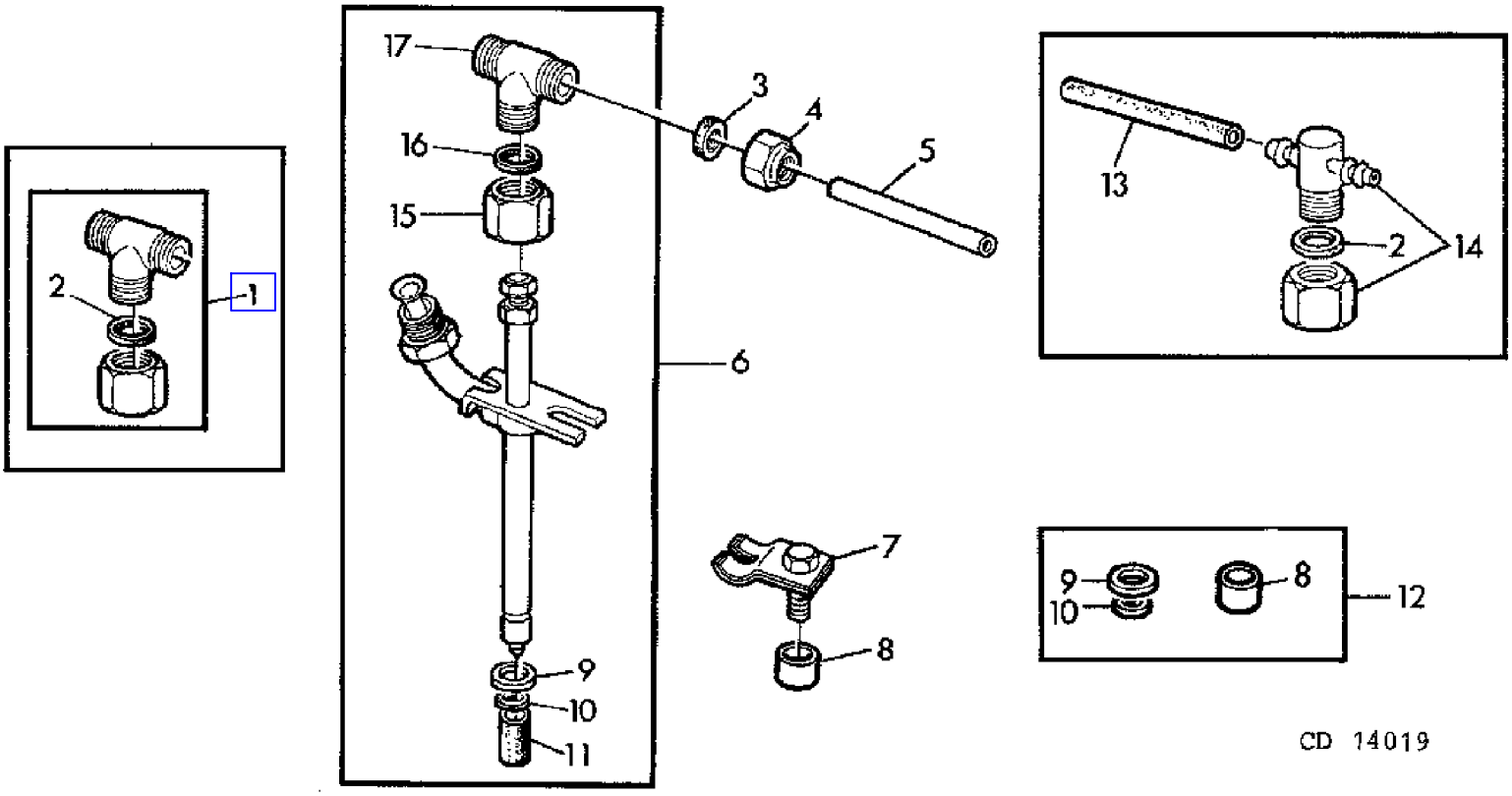

COPYRIGHT©1994 - 2008 DEERE & COMPANY Moline, Illinois All rights reserved

(1D23) FUEL INJECTION NOZZLE "STANADYNE"
INJECTEUR "STANADYNE"
KRAFTSTOFF-EINSPRITZDUESE "STANADYNE"
INIETTORE "STANADYNE"
INYECTOR DE COMBUSTIBLE "STANADYNE"
BRANSLEINSPRUTARE "STANADYNE"

KEY	PART NO.	PART NAME	QTY	SERIAL NO.	975	975HY/4	REMARKS
1	AR85618	CAP	AR		X	X	KIT (W/ AR90023) ORD R79605, R79604, R79606)
2	T29539	WASHER	1		X	X	(ORD R79605)
3	R51936	PACKING	12		X	X	(W/ AR90023)
4	R51937	TUBE NUT	12		X	X	(W/ AR90023)
5	R66090	TUBE	5		X	X	(W/ AR90023)
6	AR90023	INJECTION NOZZLE	6		X	X	ASSY, STANADYNE NO.27337 (SUB FOR AR68364, AR78031, AR88238, AR88241)
7	R34760	CLAMP	6		X	X	
8	R60745	SPACER	6		X	X	NSEP (ORD RE13887)
9	R60746	WASHER	1		X	X	UP, NSEP (ORD RE13887) (SUB FOR R34764 APPL)
10	R48000	WASHER	1		X	X	LOW
11	T24472	PLUG	1		X	X	
12	RE13887	O-RING KIT	AR		X	X	KIT
13	.....	HOSE	5		X	X	(W/ AR88238) NSEP (ORD R68281) X X (W/ AR88238)
15	R79604	TUBE NUT	1		X	X	
16	R79605	WASHER	1		X	X	
17	R79606	TEE FITTING	1		X	X	
..	R68281	BULK HOSE	AR		X	X	LGTH = 1,5 M (59") (SUB FOR AT32064)

COPYRIGHT©1994 - 2008 DEERE & COMPANY Moline, Illinois All rights reserved

(1D22) FUEL INJECTION PUMP LINES "ROOSA-MASTER"
POMPE D'INJECTION CONDUITES "ROOSA-MASTER"
KRAFTSTOFF-EINSPRITZPUMPENLEITUNGEN "ROOSA-MASTER"
TUBAZIONI DELLA POMPA D'INIEZIONE "ROOSA-MASTER"
TUBERIAS DE BOMBA DE INYECCION DE COMBUSTIBLE "ROOSA-MASTER"
LEDNINGAR AV INSPRUTNINGSPUMPEN "ROOSA-MASTER"

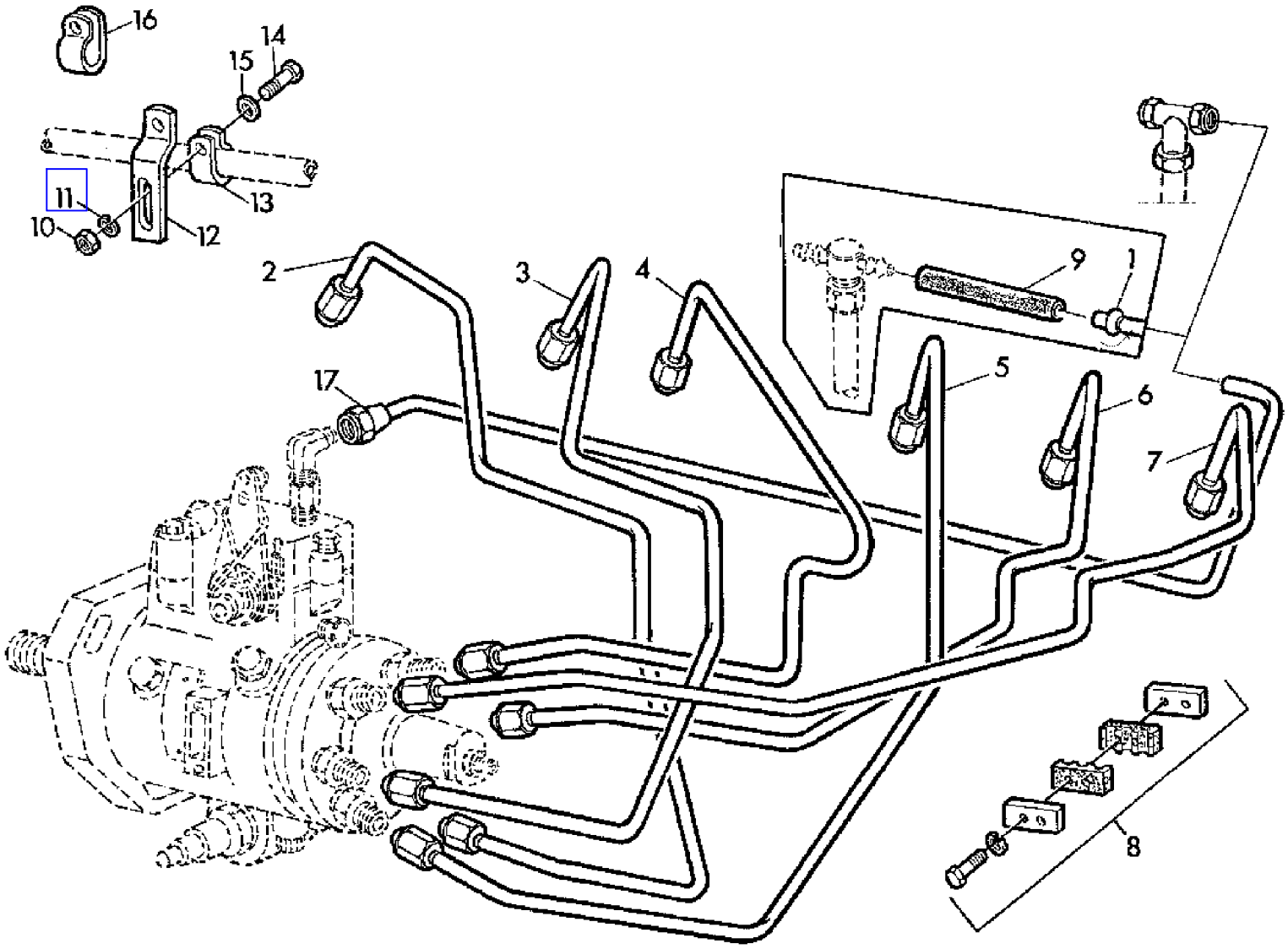

Z 26881

COPYRIGHT©1994 - 2008 DEERE & COMPANY Moline, Illinois All rights reserved

(1D22) FUEL INJECTION PUMP LINES "ROOSA-MASTER"
POMPE D'INJECTION CONDUITES "ROOSA-MASTER"
KRAFTSTOFF-EINSPRITZPUMPENLEITUNGEN "ROOSA-MASTER"
TUBAZIONI DELLA POMPA D'INIEZIONE "ROOSA-MASTER"
TUBERIAS DE BOMBA DE INYECCION DE COMBUSTIBLE "ROOSA-MASTER"
LEDNINGAR AV INSPRUTNINGSPUMPEN "ROOSA-MASTER"

KEY	PART NO.	PART NAME	QTY	SERIAL NO.	975	975HY	REMARKS
1	AR71071	FUEL LINE	1	- 417826	X	X	
2	AR78291	FUEL LINE	1		X	X	NO.1 (ORD RE20789, RE20790)
	RE20789	FUEL LINE	AR		X	X	NO.1
3	AR78292	FUEL LINE	1		X	X	NO.2 (ORD RE20790)
	RE20790	FUEL LINE	AR		X	X	NO.2
4	AR78293	FUEL LINE	1		X	X	NO.3
5	AR78294	FUEL LINE	1		X	X	NO.4
6	AR78295	FUEL LINE	1		X	X	NO.5
7	AR78296	FUEL LINE	1		X	X	NO.6
8	DD13912	FLANGE	2		X	X	(SUB FOR AR62194)
9	T27465	HOSE	1	- 417826	X	X	NSEP (ORD R68281)
10	14H785	NUT	1		X	X	5/16"
11	12H303	LOCK WASHER	1		X	X	5/16"
12	R48569	BRACKET	1		X	X	
13	T13914	CLAMP	1		X	X	
14	19H1813	CAP SCREW	1		X	X	5/16" X 5/8"
15	24H1136	WASHER	1		X	X	11/32" X 11/16" X .060"
16	T29969	CLAMP	1		X	X	
17	AR89484	TUBE	1	417827 -	X	X	
..	R68281	BULK HOSE	AR		X	X	LGTH = 1,5 M (59,05")

COPYRIGHT©1994 - 2008 DEERE & COMPANY Moline, Illinois All rights reserved

(1D19) FUEL INJECTION PUMP"STANADYNE"
POMPE D'INJECTION"STANADYNE"
KRAFTSTOFF-EINSPRITZPUMPE"STANADYNE"
POMPA D'INIEZIONE"STANADYNE"
BOMBA DE INYECCION DE COMBUSTIBLE"STANADYNE"
INSPRUTNINGSPUMP"STANADYNE"

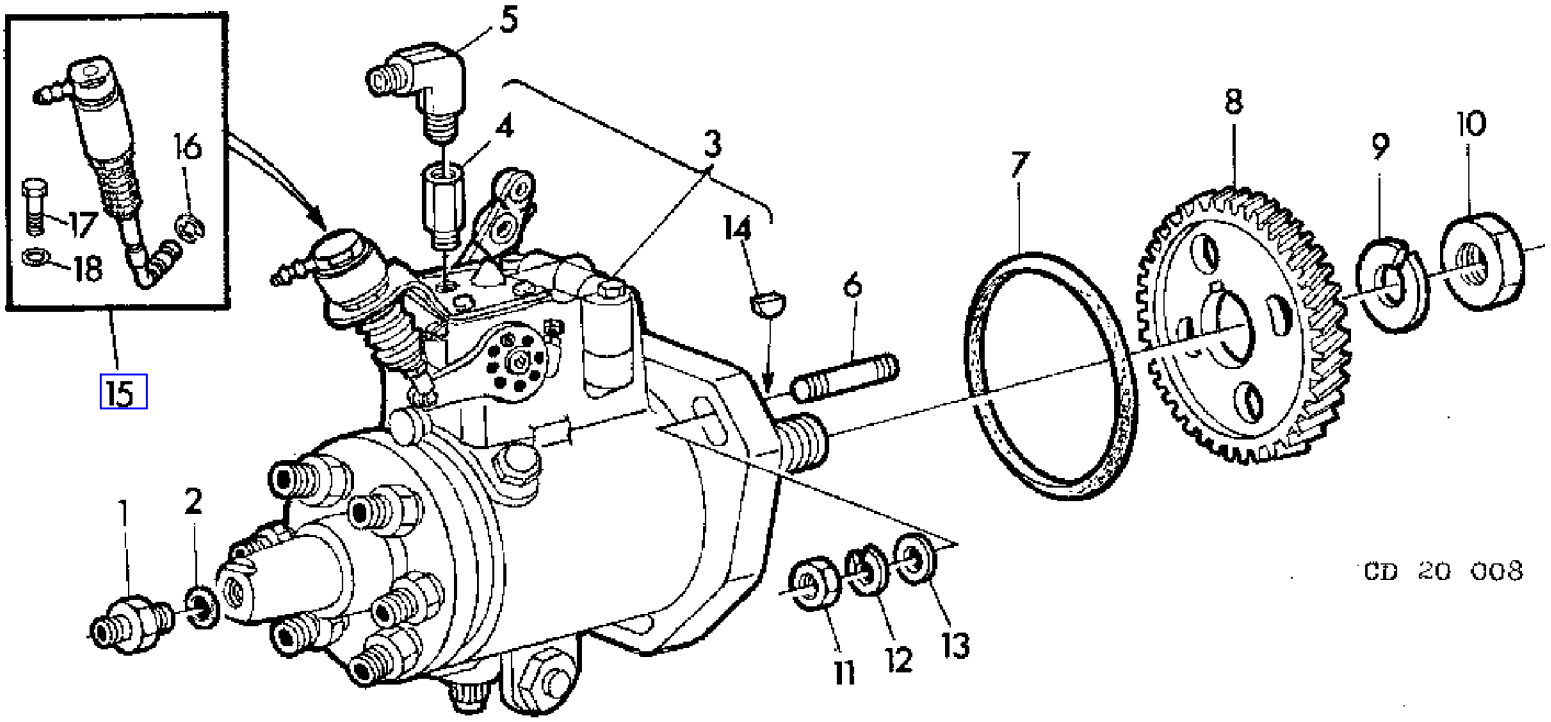

COPYRIGHT©1994 - 2008 DEERE & COMPANY Moline, Illinois All rights reserved

(1D19) FUEL INJECTION PUMP"STANADYNE"
POMPE D'INJECTION"STANADYNE"
KRAFTSTOFF-EINSPRITZPUMPE"STANADYNE"
POMPA D'INIEZIONE"STANADYNE"
BOMBA DE INYECCION DE COMBUSTIBLE"STANADYNE"
INSPRUTNINGSPUMP"STANADYNE"

KEY	PART NO.	PART NAME	QTY	SERIAL NO.	975	975HY/4	REMARKS
1	R27272	FITTING	1		X	X	
2	R26286	O-RING	1		X	X	
3	AR101136	FUEL INJECTION PUMP	1		X	X	ASSY, INCL KEYS 4,7,14,15 (DM4627 ABC 3967) (SUB FOR AR73797, AR87884)
4	R36535	CHECK VALVE	1		X	X	
5	T13201	ELBOW FITTING	1		X	X	
6	T23442	STUD	3		X	X	
7	R54229	SEAL	1		X	X	
8	R56056	GEAR	1		X	X	Z = 48
9	R56423	WASHER	1		X	X	
10	R56422	NUT	1		X	X	
11	14H785	NUT	3		X	X	5/16"
12	12H303	LOCK WASHER	3		X	X	5/16"
13	24H1243	WASHER	3		X	X	11/32" X 5/8" X .060"
14	R56424	SHAFT KEY	1		X	X	
15	RE10536	KIT	1		X	X	ASSY
16	R62297	RING	2		X	X	
17	R62292	CAP SCREW	4		X	X	
18	R78298	LOCK WASHER	4		X	X	

COPYRIGHT©1994 - 2008 DEERE & COMPANY Moline, Illinois All rights reserved

(1D06) FUEL TANK
RESERVOIR A COMBUSTIBLE
KRAFTSTOFFTANK
SERBATOIO COMBUSTIBILE
DEPOSITO DE COMBUSTIBLE
BRANSLETANK

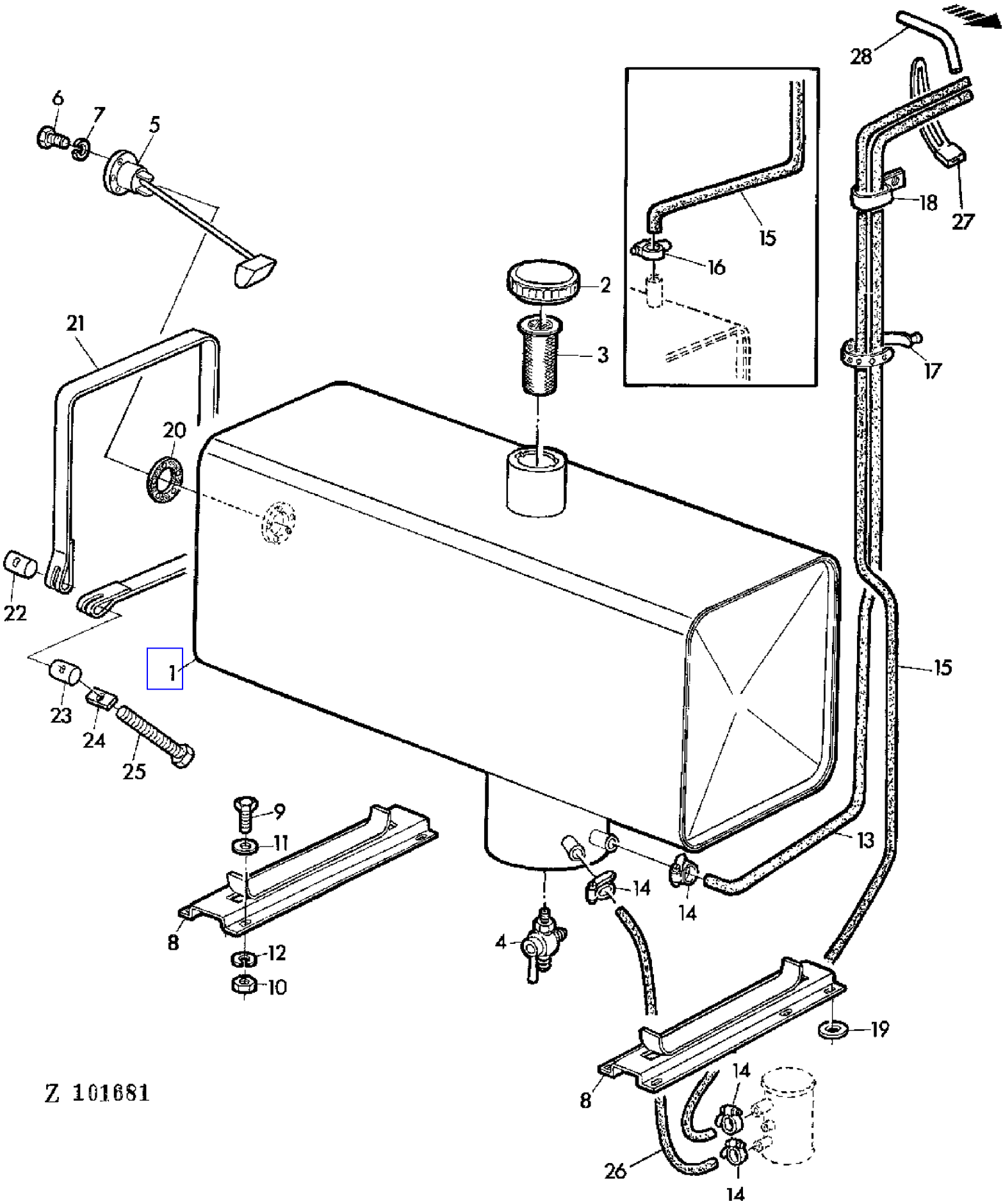

COPYRIGHT©1994 - 2008 DEERE & COMPANY Moline, Illinois All rights reserved

(1D06) FUEL TANK
RESERVOIR A COMBUSTIBLE
KRAFTSTOFFTANK
SERBATOIO COMBUSTIBILE
DEPOSITO DE COMBUSTIBLE
BRANSLETANK

KEY	PART NO.	PART NAME	QTY	SERIAL NO.		975	975HY/4	REMARKS
1	AZ23737	FUEL TANK	1		- 015897	X		INCL KEYS 2,3 (ORD AZ25904 W/ Z36819)
	AZ25904	FUEL TANK	1	015898	-	X	X	
2	99M7013	FILLER CAP	1			X	X	
3	AZ32294	STRAINER	1			X	X	(SUB FOR AZ14387)
4	AZ23843	SHUT-OFF VALVE	1			X	X	
5	AT31619	FLOAT	1			X	X	
6	19M7640	CAP SCREW	AR			X	X	M5 X 12
7	12M7011	LOCK WASHER	AR			X	X	5 MM
8	AZ24546	HOLDER	2			X	X	
9	19M7288	CAP SCREW	AR			X	X	M8 X 30
10	14M7029	NUT	AR			X	X	M8
11	24M7036	WASHER	AR			X	X	9 MM
12	12M7008	LOCK WASHER	AR			X	X	8 MM
13	Z34674	HOSE	1		- 015897	X		
	Z36819	HOSE	1	015898	-	X	X	
14	Z22560	CLAMP	2			X	X	
15	Z35201	HOSE	1		- 015897	X		
	Z36834	HOSE	1	015898	-	X	X	
16	Z21240	CLAMP	AR			X		
17	Z31020	CLAMP	1			X	X	
18	Z21993	CLAMP	2			X	X	
19	24M7024	WASHER	AR			X	X	
20	L29265	GASKET	1			X	X	(SUB FOR R27181)
21	Z35592	BAND	2			X	X	
22	Z21661	PIN	2			X	X	
23	Z21660	PIN	2			X	X	
24	Z21659	WASHER	2			X	X	
25	19M7385	CAP SCREW	2			X	X	M10 X 70
26	Z36863	HOSE	1	015898	-	X	X	
27	Z31799	CLAMP	1			X	X	(SUB FOR Z34567)
28	Z38664	FUEL LINE	AR			X	X	

COPYRIGHT©1994 - 2008 DEERE & COMPANY Moline, Illinois All rights reserved

(1D07) FUEL TRANSFER PUMP "SOFABEX"
POMPE D'ALIMENTATION "SOFABEX"
KRAFTSTOFFOERDERPUMPE "SOFABEX"
POMPA D'ALIMENTAZIONE "SOFABEX"
BOMBA DE ALIMENTACION DE COMBUSTIBLE "SOFABEX"
MATAREPUMP "SOFABEX"

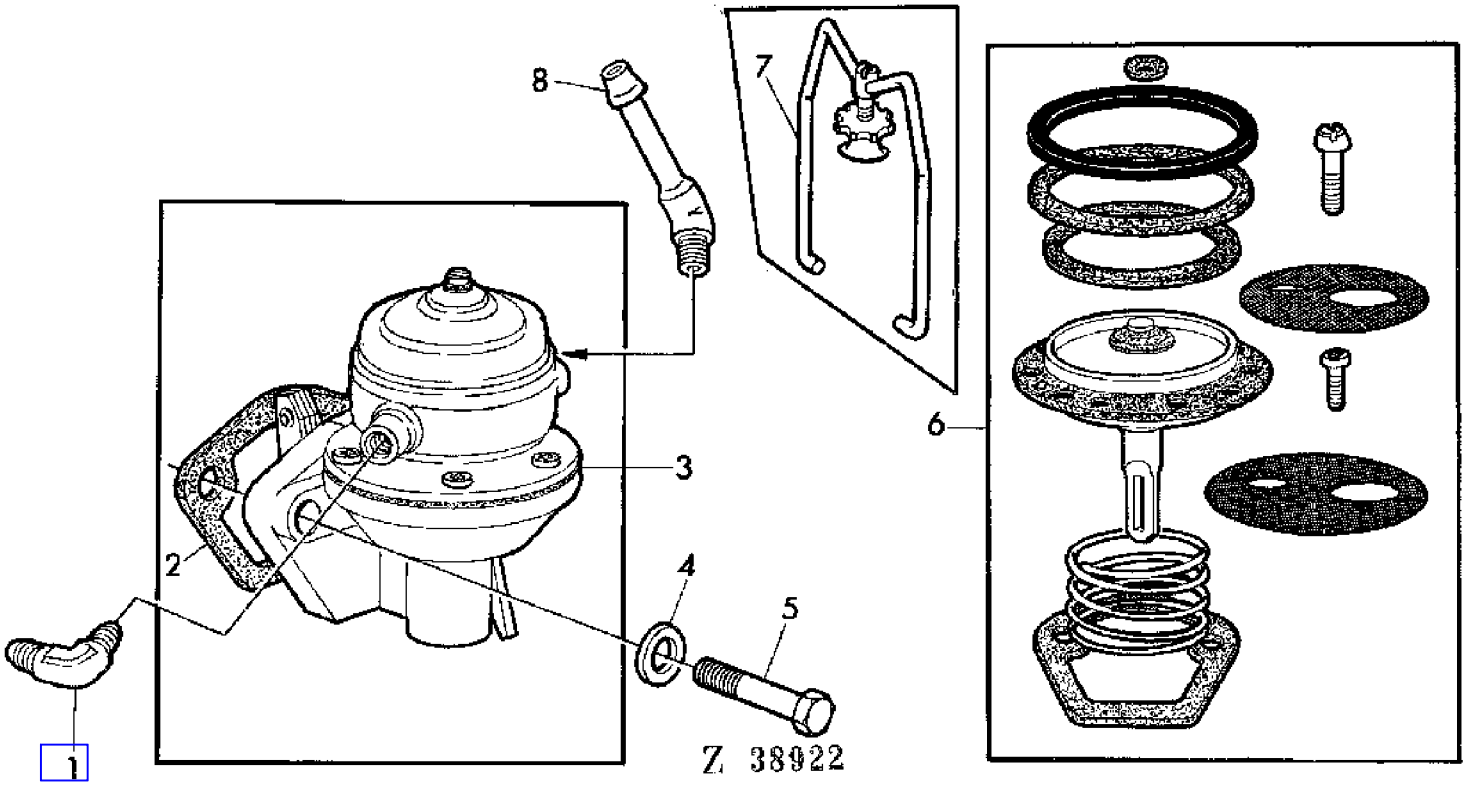

COPYRIGHT©1994 - 2008 DEERE & COMPANY Moline, Illinois All rights reserved

(1D07) FUEL TRANSFER PUMP "SOFABEX"
POMPE D'ALIMENTATION "SOFABEX"
KRAFTSTOFFOERDERPUMPE "SOFABEX"
POMPA D'ALIMENTAZIONE "SOFABEX"
BOMBA DE ALIMENTACION DE COMBUSTIBLE "SOFABEX"
MATAREPUMP "SOFABEX"

KEY	PART NO.	PART NAME	QTY	SERIAL NO.	975	975HY/4	REMARKS
1	R82131	ELBOW FITTING	1	- 377809	X		(SUB FOR T30738)
2	R27285	GASKET	1	- 377809	X		
3	DD14292	FUEL PUMP	1	- 377809	X		ASSY, INCL KEY 2 (SUB FOR AR52729, DD13483)
4	T27860	WASHER	2	- 377809	X		(SUB FOR 24H1136)
5	19H1849	CAP SCREW	2	- 377809	X		5/16" X 1-1/4"
6	RE13517	KIT	1	- 377809	X		KIT (SUB FOR AR102452, AR60559)
7	AT10638	BAIL	1	- 377809	X		
8	R61356	ELBOW FITTING	1	- 377809	X		

COPYRIGHT©1994 - 2008 DEERE & COMPANY Moline, Illinois All rights reserved

(1F10) FUSE BOX,HORN,HEADLIGHTS,CLEARANCE LIGHTS
BOITIER DES FUSIBLES,AVERTISSEUR,PHARES,FEUX DE POSITION
SICHERUNGSKASTEN,HUPE,SCHEINWERFER,POSITIONSLEUCHTEN
SCATOLA FUSIBILI,AVVISATORE ACUSTICO,FARI,LUCI D'INGOMBRO
CAJA DE FUSIBLES,BOCINA,FAROS,LUCES DE POSICION
SAKRINGSHALLARE,SIGNAL,STRALKASTARE,POSITIONSLJUS

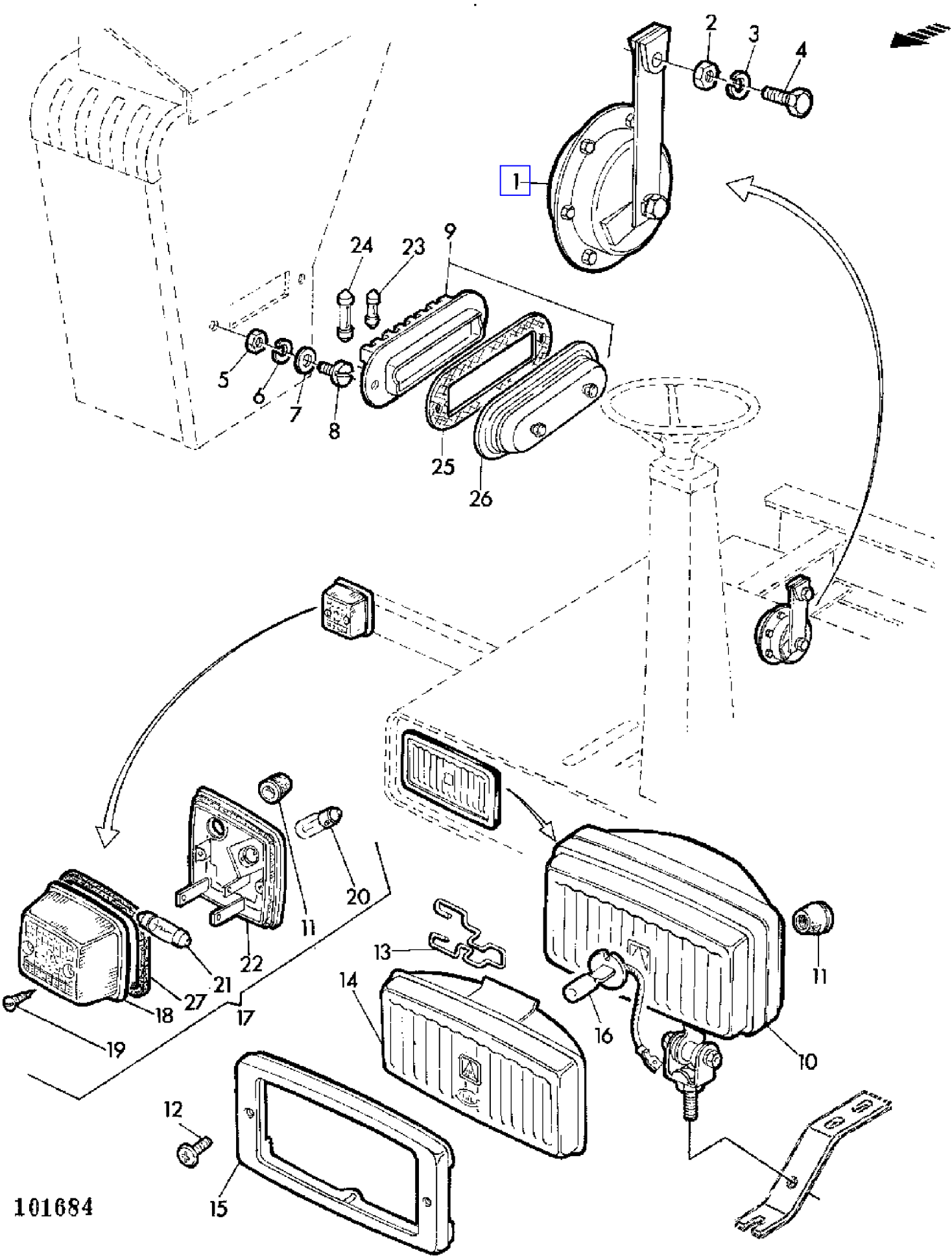

COPYRIGHT©1994 - 2008 DEERE & COMPANY Moline, Illinois All rights reserved

(1F10) FUSE BOX,HORN,HEADLIGHTS,CLEARANCE LIGHTS
BOITIER DES FUSIBLES,AVERTISSEUR,PHARES,FEUX DE POSITION
SICHERUNGSKASTEN,HUPE,SCHEINWERFER,POSITIONSLEUCHTEN
SCATOLA FUSIBILI,AVVISATORE ACUSTICO,FARI,LUCI D'INGOMBRO
CAJA DE FUSIBLES,BOCINA,FAROS,LUCES DE POSICION
SAKRINGSHALLARE,SIGNAL,STRALKASTARE,POSITIONSLJUS

KEY	PART NO.	PART NAME	QTY	SERIAL NO.	975	975HY/4	REMARKS
1	AZ38323	HORN	1		X	X	(SUB FOR AZ12135)
2	14M7029	NUT	1		X	X	M8
3	12M7008	LOCK WASHER	1		X	X	8 MM
4	19M7139	CAP SCREW	1		X	X	M8 X 20
5	14M7139	NUT	2		X	X	M4
6	12M7031	LOCK WASHER	2		X	X	4 MM
7	24M7117	WASHER	2		X	X	4,3 MM
8	21M7135	SCREW	2		X	X	M4 X 25
9	AZ23046	FUSE BOX	1		X	X	INCL KEYS 25,26
10	AZ30845	HEADLIGHT	2		X	X	INCL KEYS 11-15 (SUB FOR AZ23567)
	AZ30846	HEADLIGHT	2		X	X	(A) INCL KEYS 11-15 (SUB FOR AZ23837)
11	Z34569	GROMMET	4		X	X	
12	37M7035	BOLT	4		X	X	4 X 18 MM
13	Z34570	SPRING	2		X	X	
14	AZ23623	LENS	2		X	X	INCL KEY 13
	AZ24078	REFLECTOR	2		X	X	(A) INCL KEY 13
15	Z41169	BEZEL	2		X	X	(SUB FOR AZ23621)
16	Z26998	BULB	2		X	X	12V 55W
17	AL25644	TURN SIGNAL LAMP	2		X	X	INCL KEYS 11,18,19,22,27 (SUB FOR AZ23564)
18	AL27013	LENS	2		X	X	INCL KEY 19 (SUB FOR AZ23622)
19	37M7034	SCREW	4		X	X	4,2 X 32 MM
20	57M7014	BULB	AR		X	X	12V 21W
21	57M6274	BULB	AR		X	X	12V 5W
22	.....	HOUSING	2		X	X	NSEP (ORD KEY 17)
23	AZ23593	FUSE	AR		X	X	25A
24	99M7048	FUSE	AR		X	X	8A
25	Z35998	GASKET	1		X	X	
26	AZ24774	COVER	1		X	X	
27	Z40994	GASKET	2		X	X	

(A) YELLOW
JAUNE
GELB
GIALLO
AMARILLO
GUL

COPYRIGHT©1994 - 2008 DEERE & COMPANY Moline, Illinois All rights reserved

(3B14) GEAR SHIFTING PARTS
MECANISME DE CHANGEMENT DE VITESSE
GANGSCHALTUNG
PARTI DEL CAMBIO VELOCITA
MECANISMOS DE CAMBIO DE VELOCIDADES
VAXELDETALJER

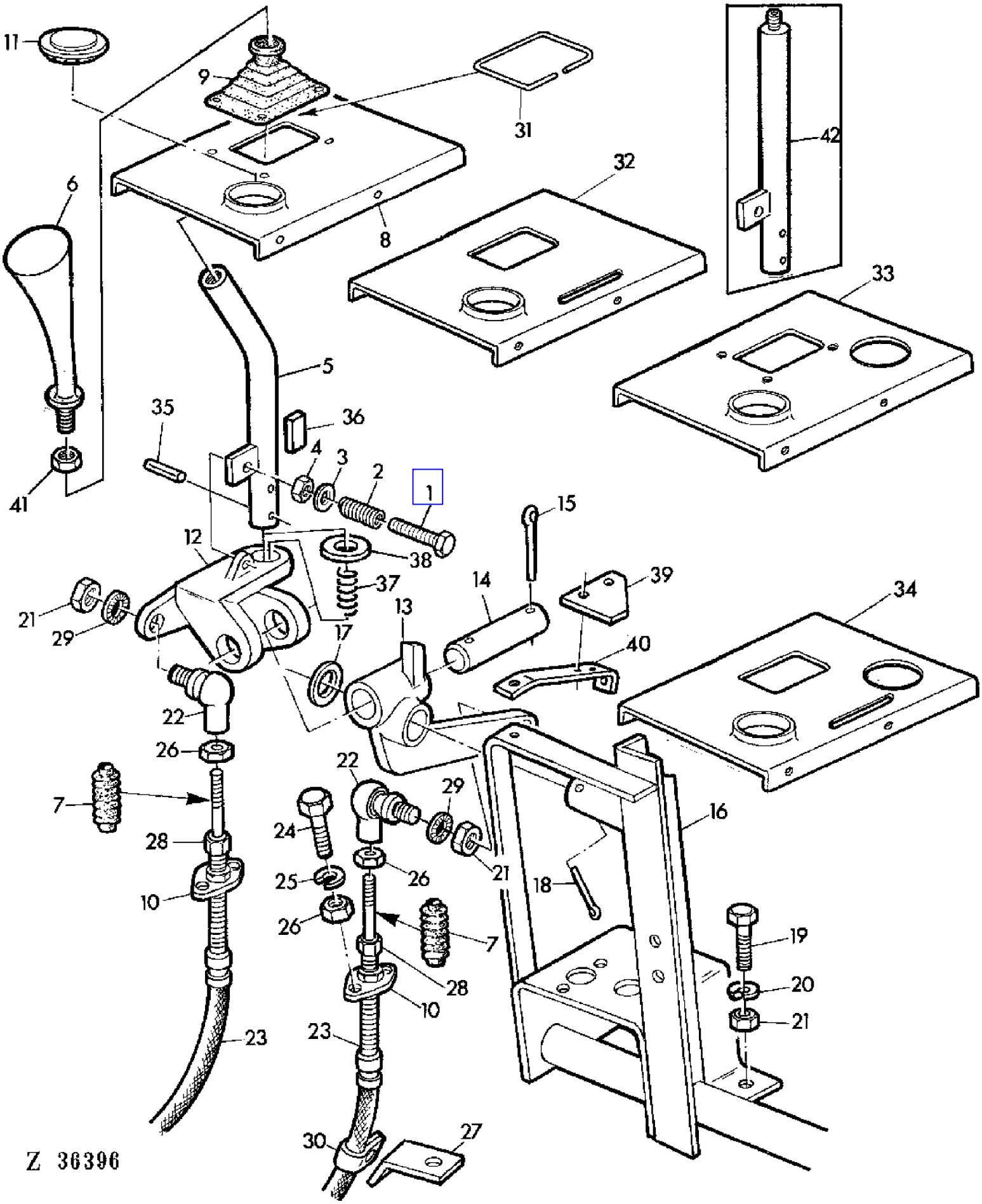

COPYRIGHT©1994 - 2008 DEERE & COMPANY Moline, Illinois All rights reserved

(3B14) GEAR SHIFTING PARTS
MECANISME DE CHANGEMENT DE VITESSE
GANGSCHALTUNG
PARTI DEL CAMBIO VELOCITA
MECANISMOS DE CAMBIO DE VELOCIDADES
VAXELDETALJER

KEY	PART NO.	PART NAME	QTY	SERIAL NO.		975	975HY/4	REMARKS
1	19M7320	CAP SCREW	1			X	X	M6 X 40
2	107SEL	COMPRESSION SPRING	1			X	X	
3	Z26250	WASHER	1			X	X	
4	14M7165	LOCK NUT	1			X	X	M6
5	AZ23840	LEVER	1		- 018097	X		
	AZ31048	LEVER	1	018098	-	X	X	(SUB FOR AZ27758)
6	AZ31250	GRIP	1			X	X	
7	Z32405	BOOT	2			X	X	
8	Z35755	COVER	1		- 018357	X		
9	Z30194	BOOT	1			X	X	
10	AZ21204	BALL JOINT	2			X	X	
11	Z33708	PLUG	1			X	X	
12	Z10735	LEVER	1		- 018097	X		
	Z11213	LEVER	1	018098	-	X	X	
13	Z10736	LEVER	1			X	X	
14	Z30715	PIN	1			X	X	
15	11M7020	COTTER PIN	2			X	X	4 X 25 MM
16	AZ19346	BRACKET	1		- 018097	X		
	AZ27759	BRACKET	1	018098	-	X	X	
17	24M7049	WASHER	1			X	X	18 MM
18	11M7026	COTTER PIN	1			X	X	5 X 25 MM
19	19M7284	CAP SCREW	1			X	X	M8 X 18
20	12M7008	LOCK WASHER	1			X	X	8 MM
21	14M7029	NUT	3			X	X	M8
22	AZ19889	BALL JOINT	2			X	X	
23	AZ29788	PUSH PULL CABLE	2			X	X	INCL KEYS 7,10,28 (SUB FOR AZ21470)
24	19M7159	CAP SCREW	8			X	X	M6 X 16
25	12M7012	LOCK WASHER	8			X	X	6MM
26	14M7027	NUT	8			X	X	M6 |
27	Z30700	RETAINER	AR			X	X	
28	AZ21203	NUT	2			X	X	
29	12M7032	LOCK WASHER	2			X	X	8,4 MM
30	Z22067	CLAMP	AR			X	X	
31	Z35851	REINFORCEMENT	1			X	X	
32	Z35756	COVER	1		- 018357	X		(A)
33	Z38404	COVER	1	018358	-	X	X	
34	Z38400	COVER	1	018358	-	X		
35	34M7029	SPRING PIN	1	018098	-	X		4 X 30 MM

(A) FOR REVERSER CLUTCH
POUR REVERMATIC
FUER WECHSELKUPPLUNG
PER INVERSORE REVERMATIC
PARA EMBRAGUE REVERMATIC
FOR FRAM-BACK KOPPLING

COPYRIGHT©1994 - 2008 DEERE & COMPANY Moline, Illinois All rights reserved

(3B14) GEAR SHIFTING PARTS
MECANISME DE CHANGEMENT DE VITESSE
GANGSCHALTUNG
PARTI DEL CAMBIO VELOCITA
MECANISMOS DE CAMBIO DE VELOCIDADES
VAXELDETALJER

KEY	PART NO.	PART NAME	QTY	SERIAL NO.		975	975HY/4	REMARKS
36	49M4039	SHAFT KEY	1	018098	-	X		6 X 32 MM
37	T44879	COMPRESSION SPRING	1	018098	-	X		(SUB FOR Z38535)
38	24M7108	WASHER	1	018098	-	X		20 MM
39	Z38527	HOLDER	1	018098	-	X	X	
40	Z38531	RETAINER	1	018098	-	X	X	
41	14M7357	NUT	1			X	X	M12 X 1,25
42	AZ27758	LEVER	1			X	X	(ORD AZ31048 W/ AZ3125, 14M7357)

(A) FOR REVERSER CLUTCH
POUR REVERMATIC
FUER WECHSELKUPPLUNG
PER INVERSORE REVERMATIC
PARA EMBRAGUE REVERMATIC
FOR FRAM-BACK KOPPLING

COPYRIGHT©1994 - 2008 DEERE & COMPANY Moline, Illinois All rights reserved

(4E08) GRAIN ELEVATOR
ELEVATEUR DE GRAIN
KOERNERELEVATOR
ELEVATORE DEL GRANO
ELEVADOR DE GRANO LIMPIO
SADESELEVATOR

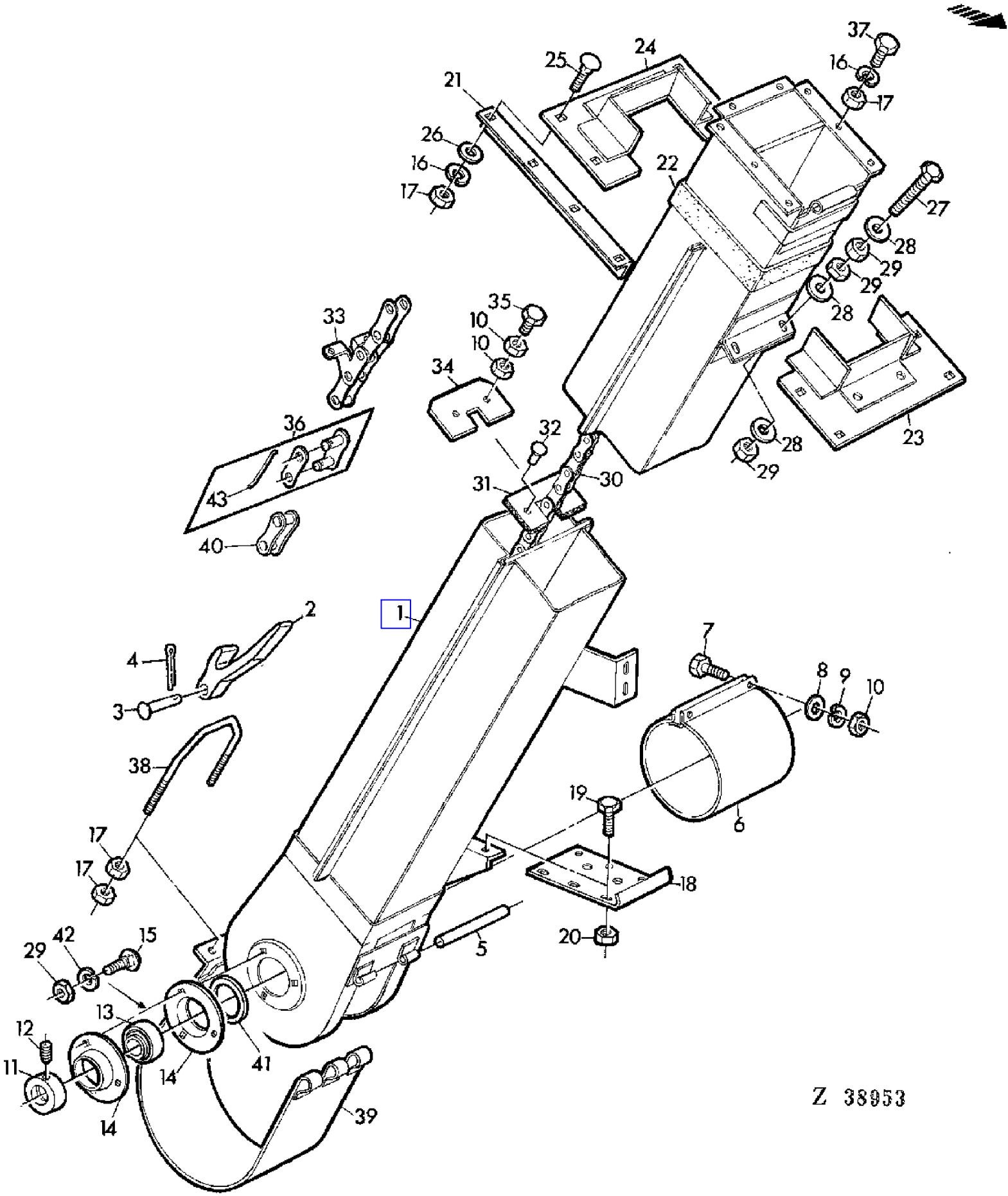

COPYRIGHT©1994 - 2008 DEERE & COMPANY Moline, Illinois All rights reserved

(4E08) GRAIN ELEVATOR
ELEVATEUR DE GRAIN
KOERNERELEVATOR
ELEVATORE DEL GRANO
ELEVADOR DE GRANO LIMPIO
SADESELEVATOR

KEY	PART NO.	PART NAME	QTY	SERIAL NO.			975	975HY/4	REMARKS
1	AZ22533	HOUSING	1		-	010731	X		(ORD AZ25455 W/ AZ25442)
	AZ25455	HOUSING	1	010732	-	016667	X		(SUB FOR AZ22533)
	AZ26943	HOUSING	1	016668	-		X	X	
2	Z11406	LEVER	1				X	X	(SUB FOR H11360)
3	Z21059	PIN	1				X	X	
4	11M7009	COTTER PIN	1				X	X	2 X 18 MM
5	Z20627	PIN	1				X	X	
6	Z20741	EXTENSION	1				X	X	(ORD AZ35683)
7	19M7286	CAP SCREW	2				X	X	M6 X 25
8	Z26250	WASHER	2				X	X	
9	12M7012	LOCK WASHER	2				X	X	6 MM
10	14M7027	NUT	2				X	X	M6
11	AZ10044	ECCENTRIC LOCKING COLLAR	1		-	016667	X		ASSY, INCL KEY 12
	AZ10045	ECCENTRIC LOCKING COLLAR	1	016668	-		X	X	ASSY, INCL KEY 12
12	AZ19843	SET SCREW	1				X	X	KIT
13	JD39102	BALL BEARING	1		-	016667	X		
	JD39103	BALL BEARING	1	016668	-		X	X	
14	P47232	PRESSED FLANGED HOUSING	2		-	016667	X		
	P45502	PRESSED FLANGED HOUSING	2	016668	-		X		
	Z38395	PRESSED FLANGED HOUSING	2					X	
15	03M7090	BOLT	3		-	016667	X		M8 X 20
	03M7088	BOLT	3	016668	-		X	X	10 X 20 MM
16	12M7008	LOCK WASHER	AR				X	X	8 MM
17	14M7029	NUT	AR				X	X	M8
18	Z20523	SUPPORT	1				X	X	
19	19M7139	CAP SCREW	AR				X	X	M8 X 20
20	14M7166	LOCK NUT	AR				X	X	M8
21	Z33475	ANGLE	2				X	X	
22	Z34340	GASKET	2				X	X	
23	AZ22539	HOLDER	1				X	X	
24	AZ22540	HOLDER	1				X	X	
25	03M7054	BOLT	AR				X	X	M8 X 20
26	24M7036	WASHER	AR				X	X	9 MM
27	19M7328	CAP SCREW	AR				X	X	M10 X 70
28	24M7040	WASHER	AR				X	X	11 MM
29	14M7140	NUT	AR				X	X	M10
30	AZ23236	LINK CHAIN	1				X	X	L = 168, ASSY, INCL KEYS 31,32,36
31	Z20781	PADDLE	AR				X	X	
32	Z20779	RIVET	AR				X	X	
33	AL15480	LINK CHAIN	AR				X	X	L = 3
	AZ22535	GATHERER CHAIN	AR				X	X	L = 168
34	Z20728	PADDLE	AR				X	X	

COPYRIGHT©1994 - 2008 DEERE & COMPANY Moline, Illinois All rights reserved

(4E08) GRAIN ELEVATOR
ELEVATEUR DE GRAIN
KOERNERELEVATOR
ELEVATORE DEL GRANO
ELEVADOR DE GRANO LIMPIO
SADESELEVATOR

KEY	PART NO.	PART NAME	QTY	SERIAL NO.		975	975HY/4	REMARKS
35	19M7077	CAP SCREW	AR			X	X	M6 X 20
36	AL15481	CHAIN LINK	AR			X	X	
37	19M7162	CAP SCREW	AR			X	X	M8 X 15
38	Z20619	U-BOLT	1			X	X	
39	AZ10315	COVER	1		- 010731	X		(FOR AZ22533)
	AZ25442	COVER	1	010732	-	X	X	(FOR AZ25455)
40	AL15479	LINK	AR			X	X	
41	Z37952	PACKING	1	016668	-	X	X	
42	12M7013	LOCK WASHER	AR	016668	-	X	X	10 MM
43	Z41567	WIRE	AR			X	X	

COPYRIGHT©1994 - 2008 DEERE & COMPANY Moline, Illinois All rights reserved

(4C20) GRAIN PAN
TABLE D'AMENEE
ZUFUEHRBODEN
TAVOLA DEL GRANO
CHAPA ALIMENTADORA
SADESPLAN

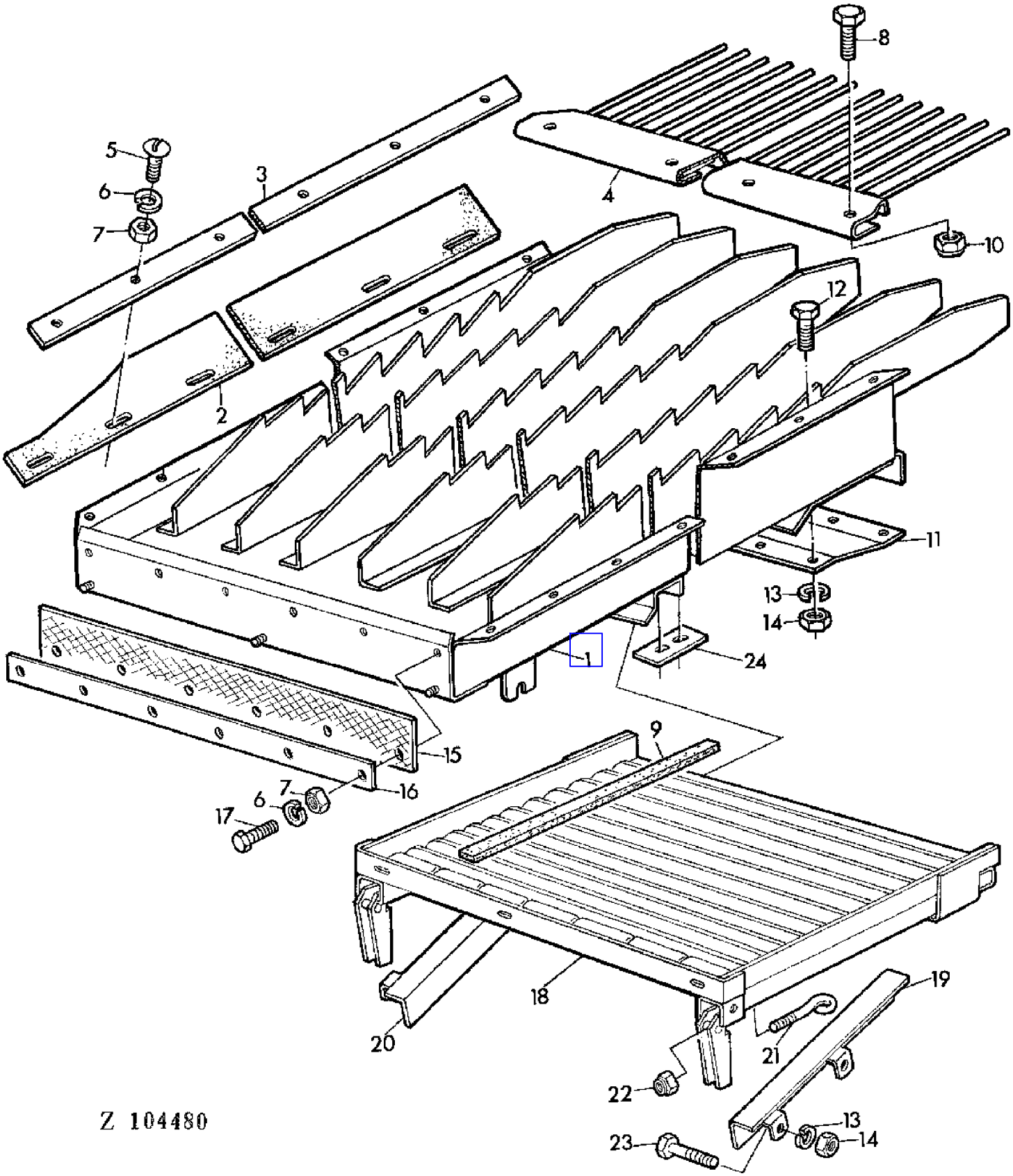

COPYRIGHT©1994 - 2008 DEERE & COMPANY Moline, Illinois All rights reserved

(4C20) GRAIN PAN
TABLE D'AMENEE
ZUFUEHRBODEN
TAVOLA DEL GRANO
CHAPA ALIMENTADORA
SADESPLAN

KEY	PART NO.	PART NAME	QTY	SERIAL NO.		975	975HY/4	REMARKS
1	AZ23116	GRAIN PAN	1		- 020002	X	X	(ORD AZ28790 W/ AZ27697, AZ27698, AZ27940, Z38466)
	AZ28790	RETURN PAN	1	020003	-	X	X	(SUB FOR AZ23116, AZ27695)
2	Z20307	GASKET	2			X	X	
3	Z20308	REINFORCEMENT	2			X	X	
4	AZ13066	EXTENSION	1		- 020002	X	X	
	AZ27698	FINGER	1	020003	-	X	X	
5	21M7031	SCREW	AR			X	X	M6 X 15
6	12M7012	LOCK WASHER	AR			X	X	6 MM
7	14M7027	NUT	AR			X	X	M6
8	19M7180	CAP SCREW	AR			X	X	M10 X 45
9	Z36532	WEATHERSTRIP	6			X	X	
10	14M7167	LOCK NUT	AR			X	X	M10
11	Z29013	REINFORCEMENT	1		- 020002	X	X	
	Z38466	REINFORCEMENT	1	020003	-	X	X	
12	19M7162	CAP SCREW	AR			X	X	M8 X 15
13	12M7008	LOCK WASHER	AR			X	X	8 MM
14	14M7029	NUT	AR			X	X	M8
15	Z43491	WEATHERSTRIP	1			X	X	(SUB FOR Z34250)
16	Z43490	STRAP	1			X	X	(SUB FOR Z34248)
17	19M7286	CAP SCREW	AR			X	X	M6 X 25
18	AZ24210	GRAIN PAN	1			X	X	
19	AZ23525	HOLDER	1			X	X	LH
20	AZ24140	HOLDER	1			X	X	RH
21	Z35132	EYEBOLT	2			X	X	
22	14M7166	LOCK NUT	2			X	X	M8
23	19M7163	CAP SCREW	AR			X	X	M8 X 25
24	Z39603	ADJUSTING STRAP	2			X	X	

COPYRIGHT©1994 - 2008 DEERE & COMPANY Moline, Illinois All rights reserved

(4D06) GRAIN PAN SHAFT AND SUPPORT
SUPPORT ET ARBRE DE LA TABLE A GRAINS
WELLE UND AUFHAENGER FUER STAFFELBODEN
ALBERO E SUPPORTO DELLA TAVOLA GRANO
EJE Y SUSPENSION DE LA CHAPA ALIMENTADORA
SADESPLANAXEL OCH UPPHANGNING

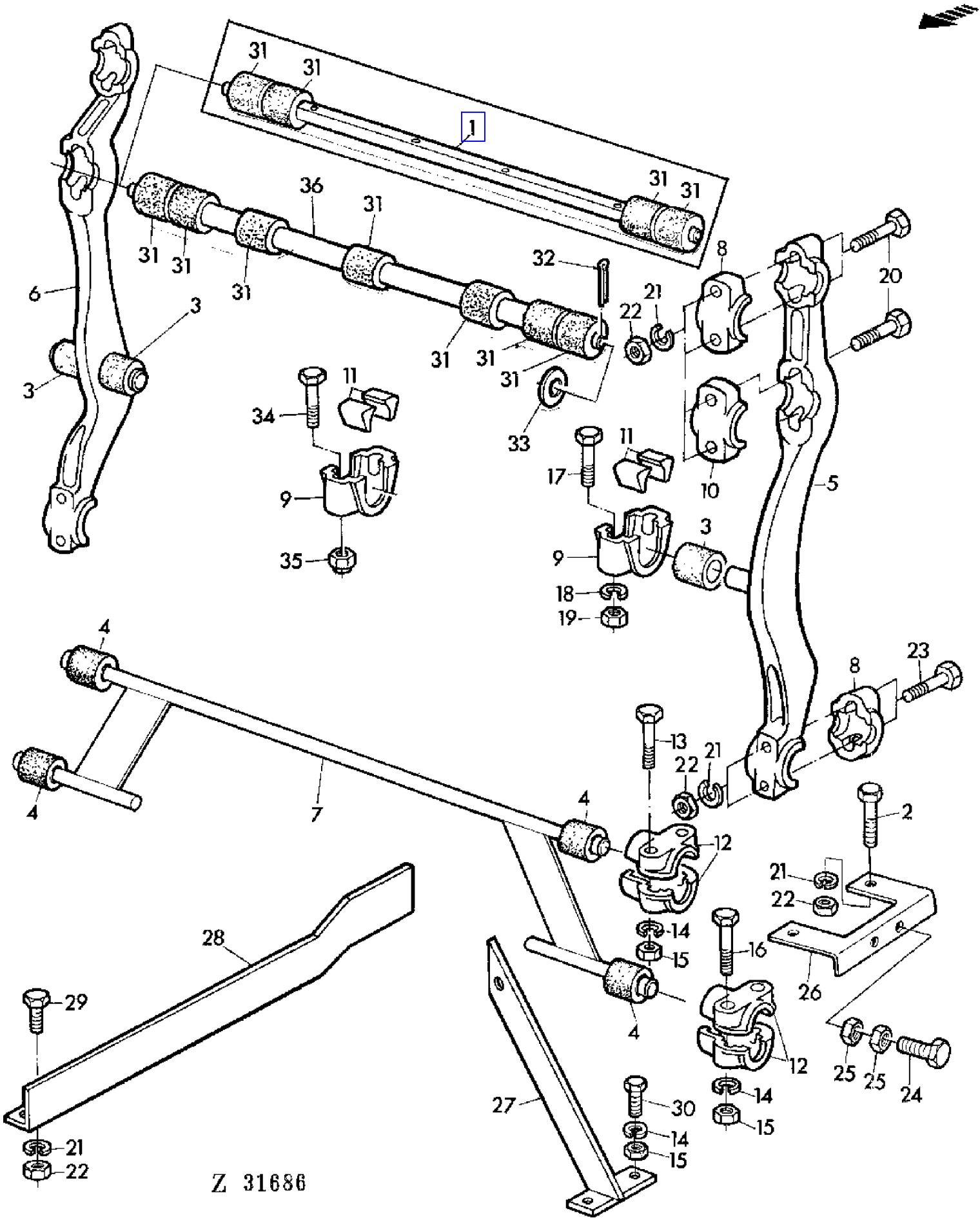

COPYRIGHT©1994 - 2008 DEERE & COMPANY Moline, Illinois All rights reserved

(4D06) GRAIN PAN SHAFT AND SUPPORT
SUPPORT ET ARBRE DE LA TABLE A GRAINS
WELLE UND AUFHAENGER FUER STAFFELBODEN
ALBERO E SUPPORTO DELLA TAVOLA GRANO
EJE Y SUSPENSION DE LA CHAPA ALIMENTADORA
SADESPLANAXEL OCH UPPHANGNING

KEY	PART NO.	PART NAME	QTY	SERIAL NO.		975	975HY/4	REMARKS
1	AZ28485	SHAFT	1		- 020002	X		ASSY, INCL KEYS 31-33 (SUB FOR AZ17703)
2	19M7381	CAP SCREW	1			X	X	M10 X 28
3	P49545	BUSHING	AR			X	X	(SUB FOR AZ30965)
4	P42100	BUSHING	AR			X	X	(SUB FOR AZ30964)
5	AZ17705	HANGER	1			X	X	LH, ASSY, INCL KEY 3
6	AZ17704	HANGER	1			X	X	RH, ASSY, INCL KEY 3
7	AZ22787	HANGER	1			X	X	ASSY, INCL KEY 4
8	Z10639	BEARING	4			X	X	
9	Z10418	QUILL	3		- 020002	X	X	
	Z10418	QUILL	6	020003	-	X	X	
10	Z10634	HOUSING	2			X	X	
11	H10613	WEDGE	6		- 020002	X	X	
	H10613	WEDGE	12	020003	-	X	X	
12	PK1103H	BEARING	8			X	X	
13	19M7185	CAP SCREW	AR			X	X	M8 X 60
14	12M7008	LOCK WASHER	AR			X	X	8 MM
15	14M7029	NUT	AR			X	X	M8
16	19M7185	CAP SCREW	AR			X	X	M8 X 60
17	19M7273	CAP SCREW	AR			X	X	M12 X 60
18	12M7014	LOCK WASHER	AR			X	X	12 MM
19	14M7031	NUT	AR			X	X	M12
20	19M7156	CAP SCREW	AR			X	X	M10 X 60
21	12M7013	LOCK WASHER	AR			X	X	10 MM
22	14M7140	NUT	AR			X	X	M10
23	19M7328	CAP SCREW	AR			X	X	M10 X 70
24	19M7387	CAP SCREW	AR			X	X	M12 X 40
25	14M7154	NUT	AR			X	X	M12
26	Z33258	GUIDE	1			X	X	
27	AZ17792	BRACE	1			X	X	
28	Z29015	REINFORCEMENT	1			X	X	
29	19M7166	CAP SCREW	AR			X	X	M10 X 20
30	19M7139	CAP SCREW	AR			X	X	M8 X 20
31	Z37972	BUSHING	7			X	X	
32	11M7029	COTTER PIN	AR			X	X	5 X 36 MM
33	24M7046	WASHER	AR			X	X	26 MM
34	19M7330	CAP SCREW	6	020003	-	X	X	M12 X 55
35	14M7168	LOCK NUT	6	020003	-	X	X	M12
36	AZ27697	SHAFT	1	020003	-	X	X	ASSY, INCL KEY 31
..	AZ27940	RETAINER	1		- 020002	X		INCL KEYS (3) 9, (6) 11, (2) 32, (2) 33, (6) 34, (6) 35

COPYRIGHT©1994 - 2008 DEERE & COMPANY Moline, Illinois All rights reserved

(1F20) GRAIN TANK "FULL" INDICATOR
INDICATEUR DE PLEIN DE TREMIE A GRAIN
KORNTANK-FUELLANZEIGE
INDICATORE DI PIENO DEL SERBATOIO GRANO
TANQUE DE GRANO-INDICADOR DE PLENO LLENADO
NIVAINDIKATOR FOR SPANNMALSTANK

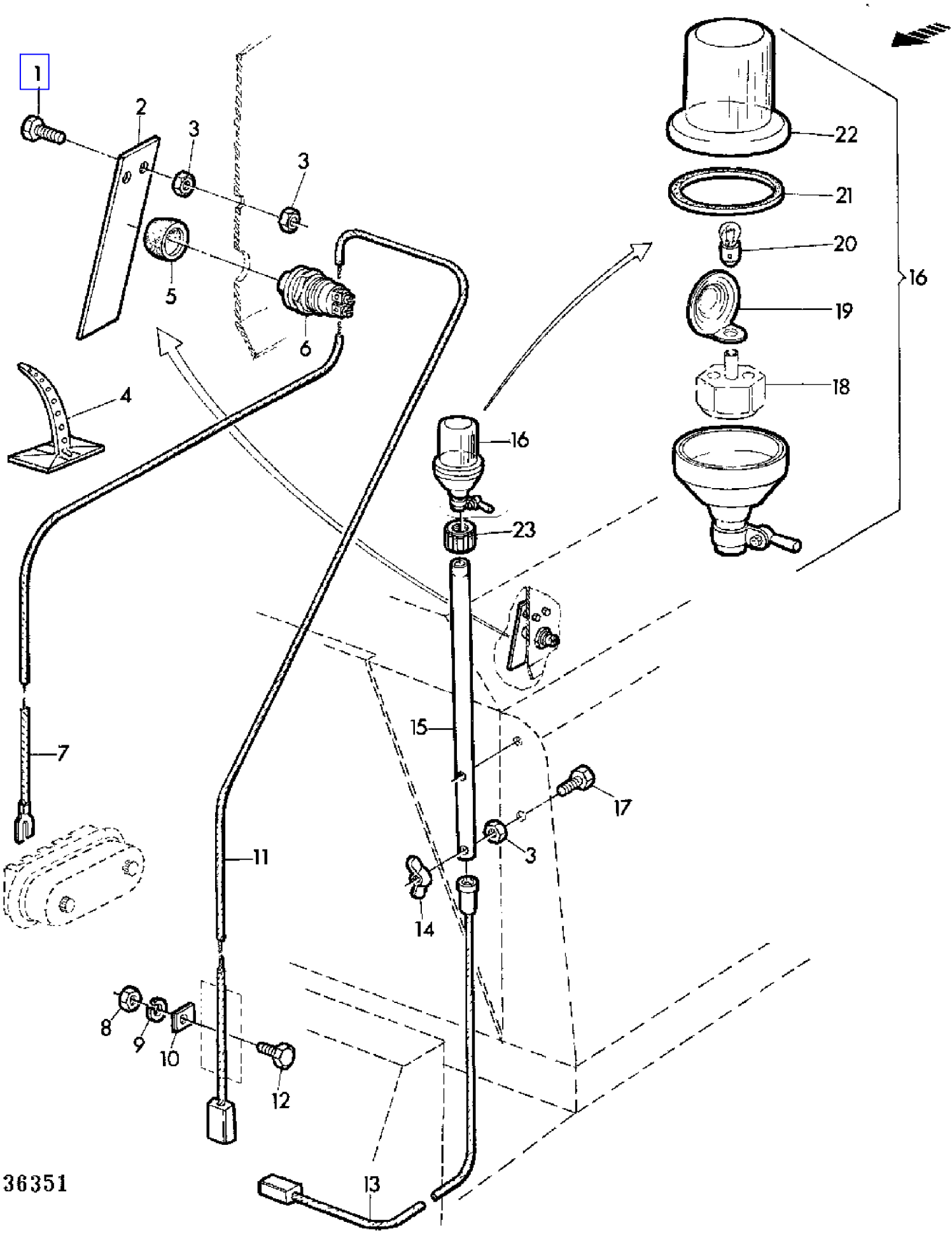

COPYRIGHT©1994 - 2008 DEERE & COMPANY Moline, Illinois All rights reserved

(1F20) GRAIN TANK "FULL" INDICATOR
INDICATEUR DE PLEIN DE TREMIE A GRAIN
KORNTANK-FUELLANZEIGE
INDICATORE DI PIENO DEL SERBATOIO GRANO
TANQUE DE GRANO-INDICADOR DE PLENO LLENADO
NIVAINDIKATOR FOR SPANNMALSTANK

KEY	PART NO.	PART NAME	QTY	SERIAL NO.	975	975HY/4	REMARKS
1	19M7139	CAP SCREW	2		X	X	M8 X 20
2	Z34806	STRAP	1		X	X	
3	14M7029	NUT	6		X	X	M8
4	Z36647	CLAMP	5		X	X	
5	Z25724	CAP	1		X	X	
6	AZ14727	PUSH BUTTON	1		X	X	ASSY, INCL KEY 5
7	AZ23835	WIRING LEAD	1		X	X	
8	14M7027	NUT	3		X	X	M6
9	12M7012	LOCK WASHER	3		X	X	6 MM
10	Z23521	CLAMP	3		X	X	
11	AZ23846	POWER CORD	1		X	X	
12	21M7086	SCREW	3		X	X	M6 X 20
13	AZ23845	CABLE	1		X	X	
14	14M7020	WING NUT	2		X	X	M8
15	Z34807	PIPE	1		X	X	
16	AZ23847	INDICATOR LIGHT	1		X	X	
17	19M7164	CAP SCREW	2		X	X	M8 X 50
18	.....	SOCKET	1		X	X	NSEP
19	Z35716	REFLECTOR	1		X	X	
20	57M7019	BULB	1		X	X	
21	Z35715	GASKET	1		X	X	
22	Z35714	LENS	1		X	X	
23	Z40668	SPACER	1		X	X	

COPYRIGHT©1994 - 2008 DEERE & COMPANY Moline, Illinois All rights reserved

(4F12) GRAIN TANK - LOADING AUGER
VIS DE REPARTITION DE TREMIE A GRAIN
KORNTANK - VERTEILERSCHNECKE
COCLEA LIVELLAMENTO DEL SERBATOIO GRANO
TANQUE DE GRANO - SINFIN DISTRIBUIDOR
SPANNMALSTANKENS UTJAMNINGSSKRUV

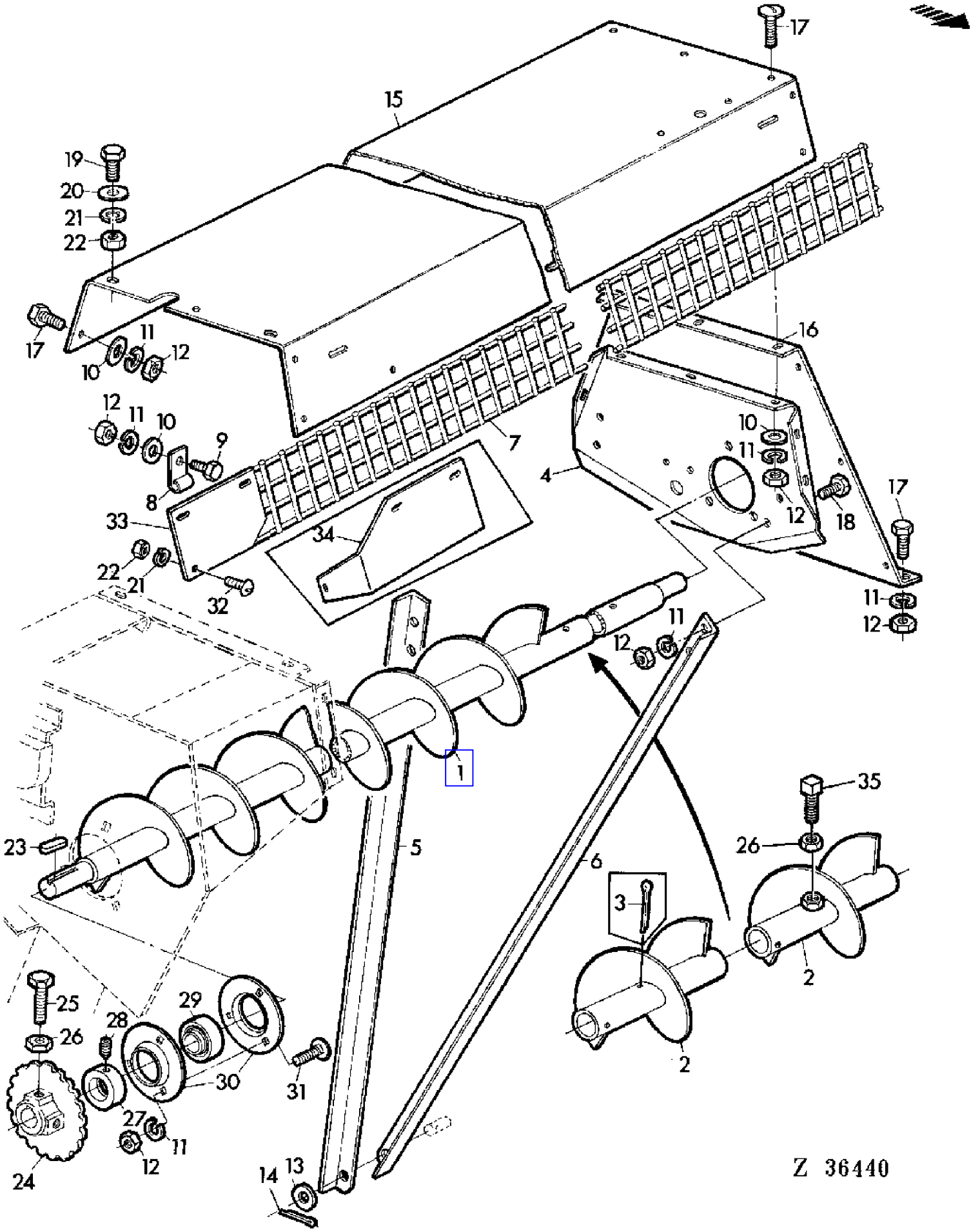

COPYRIGHT©1994 - 2008 DEERE & COMPANY Moline, Illinois All rights reserved

(4F12) GRAIN TANK - LOADING AUGER
VIS DE REPARTITION DE TREMIE A GRAIN
KORNTANK - VERTEILERSCHNECKE
COCLEA LIVELLAMENTO DEL SERBATOIO GRANO
TANQUE DE GRANO - SINFIN DISTRIBUIDOR
SPANNMALSTANKENS UTJAMNINGSSKRUV

KEY	PART NO.	PART NAME	QTY	SERIAL NO.		975	975HY/4	REMARKS
1	AZ23238	AUGER	1		- 025057	X	X	
	AZ25686	AUGER	1	025058	-	X	X	
2	AZ31512	FLIGHT	AR			X	X	(SUB FOR AZ10353, AZ28895)
3	11M7032	COTTER PIN	AR			X	X	5 X 55 MM
4	Z34354	BRACKET	1			X	X	
5	Z34341	BRACE	1			X	X	
6	Z34342	BRACE	1			X	X	
7	AZ23809	GRATE	1			X	X	(SUB FOR AZ24245)
8	Z22561	CLAMP	4			X	X	
9	19M7284	CAP SCREW	AR			X	X	M8 X 18
10	24M7036	WASHER	AR			X	X	9 MM
11	12M7008	LOCK WASHER	AR			X	X	8 MM
12	14M7029	NUT	AR			X	X	M8
13	24M7107	WASHER	AR			X	X	14 MM
14	11M7012	COTTER PIN	AR			X	X	3 X 18 MM
15	AZ30979	GUARD	1			X	X	(SUB FOR AZ23243)
16	Z34353	PANEL	1			X	X	
17	19M7162	CAP SCREW	AR			X	X	M8 X 16
18	19M7139	CAP SCREW	AR			X	X	M8 X 20
19	19M7159	CAP SCREW	AR			X	X	M6 X 16
20	Z26250	WASHER	AR			X	X	
21	12M7012	LOCK WASHER	AR			X	X	6 MM
22	14M7027	NUT	AR			X	X	M6
23	49M4108	SHAFT KEY	1			X	X	8 X 7 X 32 MM
24	Z10117	CHAIN SPROCKET	1			X	X	
25	Z26249	SET SCREW	1			X	X	
26	14M7152	NUT	AR			X	X	M10
27	AZ10044	ECCENTRIC LOCKING COLLAR	2			X	X	ASSY, INCL KEY 28
28	AZ19843	SET SCREW	2			X	X	KIT
29	JD39102	BALL BEARING	2			X	X	
30	P47232	PRESSED FLANGED HOUSING	4			X	X	
31	03M7090	BOLT	AR			X	X	M8 X 20
32	21M7087	SCREW	AR			X	X	M6 X 12
33	Z36521	HOLDER	1	007452	-	X	X	
34	Z36522	GUARD	AR		- 007471	X		
35	Z32433	SET SCREW	AR	025058	-	X	X	

COPYRIGHT©1994 - 2008 DEERE & COMPANY Moline, Illinois All rights reserved

(4E22) GRAIN TANK - LOWER PART
TREMIE GRAIN - PARTIE INFERIEURE
KORNTANK - UNTERTEIL
SERBATOIO GRANO - PARTE INFERIORE
TANQUE DE GRANO - PARTE INFERIOR
SPANNMALSTANK - NEDRE DEL

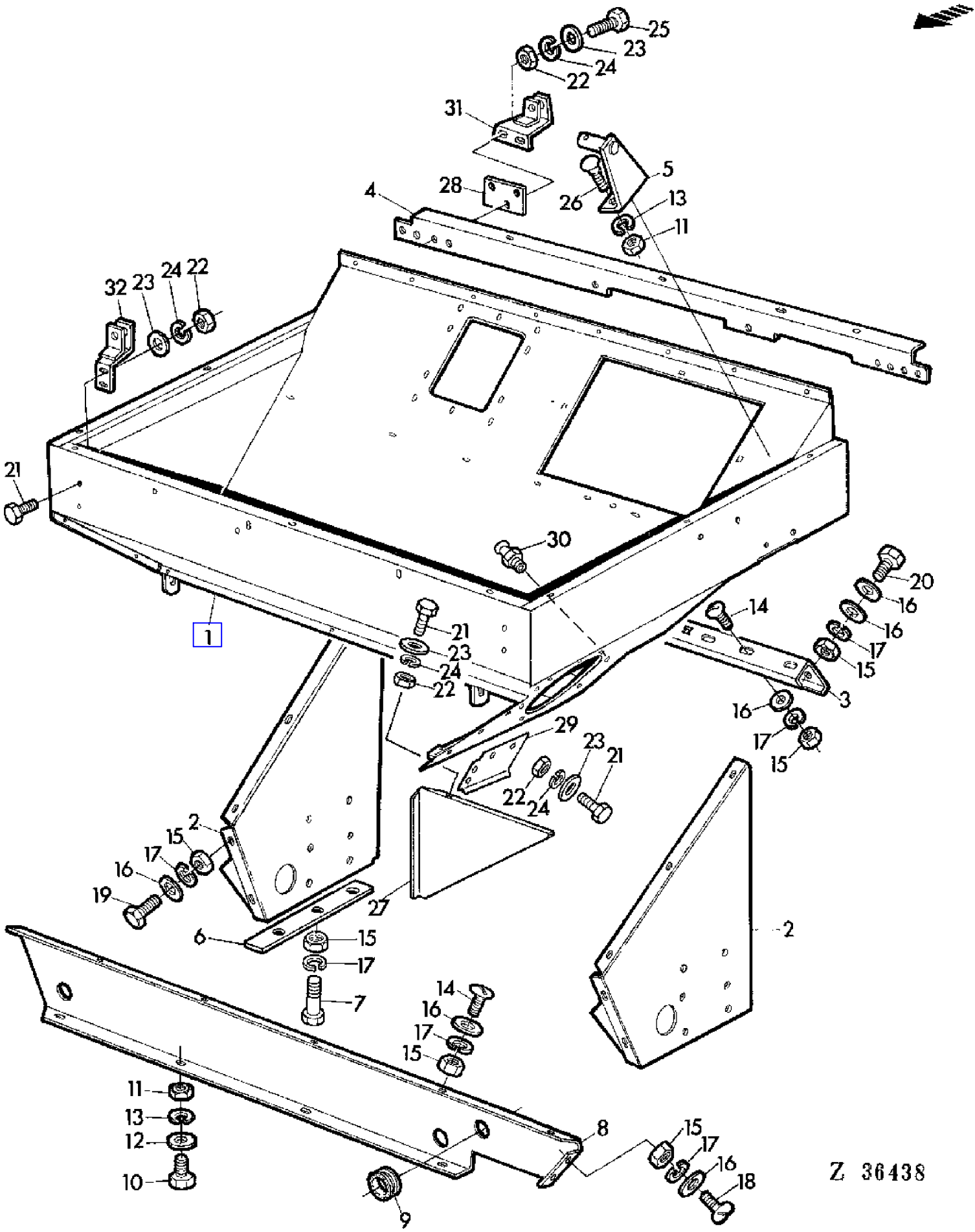

COPYRIGHT©1994 - 2008 DEERE & COMPANY Moline, Illinois All rights reserved

(4E22) GRAIN TANK - LOWER PART
TREMIE GRAIN - PARTIE INFERIEURE
KORNTANK - UNTERTEIL
SERBATOIO GRANO - PARTE INFERIORE
TANQUE DE GRANO - PARTE INFERIOR
SPANNMALSTANK - NEDRE DEL

KEY	PART NO.	PART NAME	QTY	SERIAL NO.	975	975HY/4	REMARKS
1	AZ22414	TANK	1		X	X	
2	Z33245	PANEL	2		X	X	
3	Z34322	BRACKET	1		X	X	
4	Z34324	BRACKET	1		X	X	
5	AZ23190	HOLDER	1			X	
6	Z36744	STRAP	AR		X	X	
7	19M7288	CAP SCREW	AR		X	X	M8 X 30
8	Z33250	BRACKET	1		X	X	
9	Z34467	GROMMET	3		X	X	
10	19M7167	CAP SCREW	AR		X	X	M10 X 25
11	14M7140	NUT	AR		X	X	M10
12	24M7040	WASHER	AR		X	X	11 MM
13	12M7013	LOCK WASHER	AR		X	X	10 MM
14	21M7160	SCREW	AR		X	X	M8 X 18
15	14M7029	NUT	AR		X	X	M8
16	24M7036	WASHER	AR		X	X	9 MM
17	12M7008	LOCK WASHER	AR		X	X	8 MM
18	21M7125	SCREW	AR		X	X	M8 X 25
19	19M7376	CAP SCREW	AR		X	X	M8 X 25
20	21M7089	SCREW	AR		X	X	M8 X 20
21	19M7159	CAP SCREW	AR		X	X	M6 X 16
22	14M7027	NUT	AR		X	X	M6
23	24M7088	WASHER	AR		X	X	6,6 MM
24	12M7012	LOCK WASHER	AR		X	X	6 MM
25	19M7375	CAP SCREW	AR		X	X	M6 X 18
26	03M7084	BOLT	AR		X	X	M10 X 25
27	AZ23189	GUARD	AR		X	X	
28	Z35856	PLATE	2	004831 -	X	X	
29	AZ23797	GUARD	1		X	X	
30	58M7007	LUBRICATION FITTING	AR		X	X	8 X 1 MM
31	AZ22478	HOLDER	2	- 004830	X		
32	AZ22477	HOLDER	2	- 004830	X		

COPYRIGHT©1994 - 2008 DEERE & COMPANY Moline, Illinois All rights reserved

(4E24) GRAIN TANK - UPPER PART
TREMIE A GRAIN - PARTIE SUPERIEURE
KORNTANK - OBERTEIL
SERBATOIO GRANO - PARTE SUPERIORE
TANQUE DE GRANO - PARTE SUPERIOR
SPANNMALSTANK - OVRE DEL

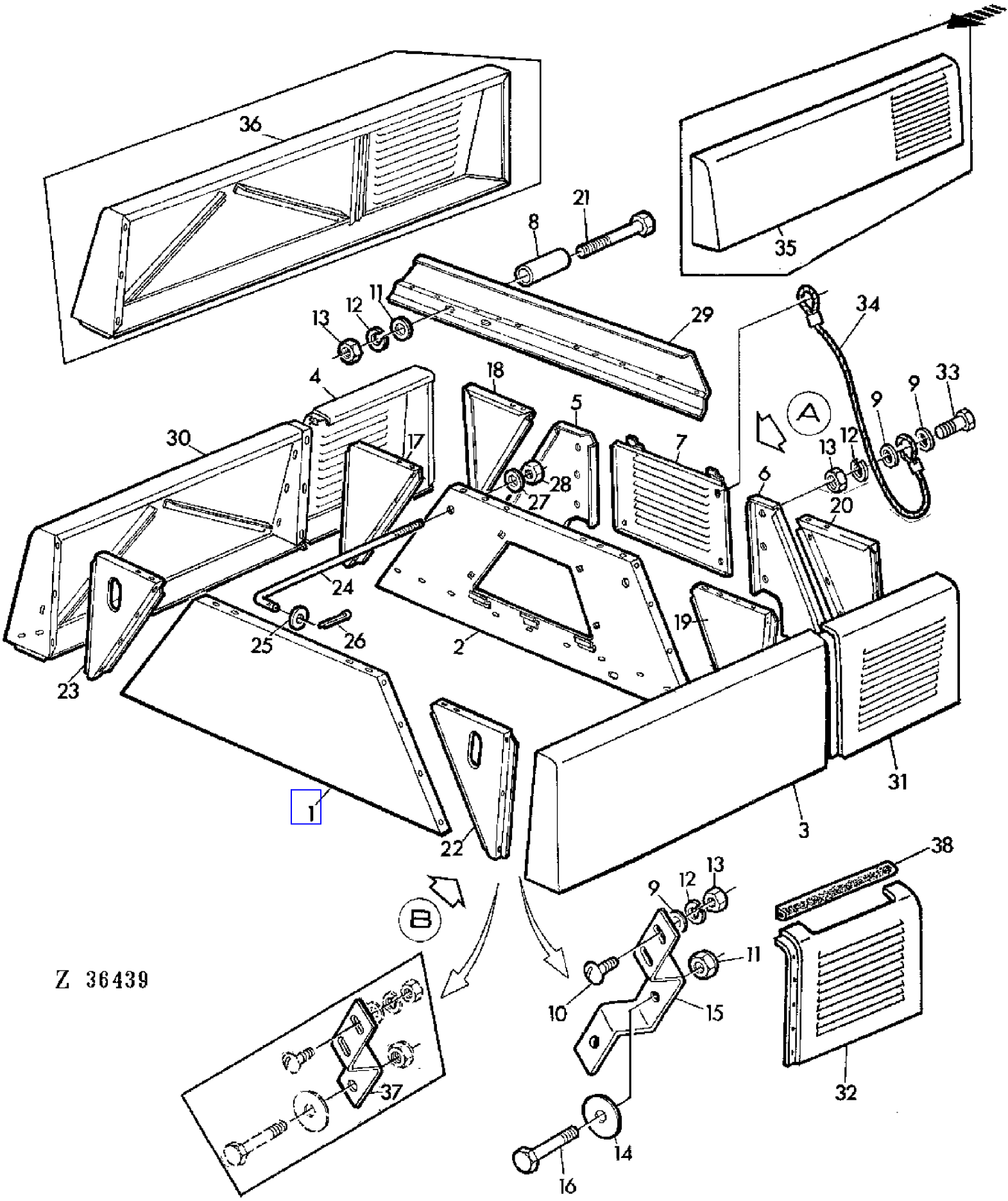

COPYRIGHT©1994 - 2008 DEERE & COMPANY Moline, Illinois All rights reserved

(4E24) GRAIN TANK - UPPER PART
TREMIE A GRAIN - PARTIE SUPERIEURE
KORNTANK - OBERTEIL
SERBATOIO GRANO - PARTE SUPERIORE
TANQUE DE GRANO - PARTE SUPERIOR
SPANNMALSTANK - OVRE DEL

KEY	PART NO.	PART NAME	QTY	SERIAL NO.			975	975HY/4	REMARKS
1	AZ22467	PANEL	1		-	004830	X		
	AZ24847	PANEL	1	004831	-		X	X	
2	AZ22469	PANEL	1		-	004830	X		
	AZ24846	PANEL	1	004831	-		X	X	
3	AZ27110	SIDE WALL	1	018098	-		X	X	
4	AZ24862	PANEL	1	004831	-		X	X	
5	AZ23007	PANEL	1		-	004830	X		
	AZ24849	PANEL	1	004831	-		X	X	
6	AZ23008	PANEL	1		-	004830	X		
	AZ24848	PANEL	1	004831	-	015187	X		
	AZ26748	PANEL	1	015188	-		X	X	
7	AZ23009	DOOR	1		-	004830	X		
	AZ24873	DOOR	1	004831	-		X	X	
8	Z34500	SPACER	4				X	X	
9	24M7036	WASHER	AR				X	X	9 MM
10	21M7160	SCREW	AR				X	X	M8 X 18
11	14M7166	LOCK NUT	AR				X	X	M8
12	12M7008	LOCK WASHER	AR				X	X	8 MM
13	14M7029	NUT	AR				X	X	M8
14	E10079	WASHER	4				X	X	
15	Z35858	HOLDER	4	004831	-		X	X	
16	19M7274	CAP SCREW	AR				X	X	M8 X 70
17	Z33271	PANEL	1		-	004830	X		
	Z35872	PANEL	1	004831	-		X	X	
18	Z33292	PANEL	1		-	004830	X		
	Z35878	PANEL	1	004831	-		X	X	
19	Z33270	PANEL	1		-	004830	X		
	Z35870	PANEL	1	004831	-		X	X	
20	Z33293	PANEL	1		-	004830	X		
	Z35875	PANEL	1	004831	-		X	X	
21	19M7398	CAP SCREW	AR				X	X	M8 X 90
22	Z34649	PANEL	1		-	004830	X		
	Z35874	PANEL	1	004831	-		X	X	
23	Z34650	PANEL	1		-	004830	X		
	Z35877	PANEL	1	004831	-		X	X	
24	Z34757	HOOK BOLT	2				X	X	
25	24M7043	WASHER	AR				X	X	12 MM
26	11M7020	COTTER PIN	AR				X	X	4 X 20 MM
27	24M7102	WASHER	AR				X	X	14 MM
28	14M7031	NUT	AR				X	X	M12
29	Z34770	SPILL SHEET	1		-	004830	X		
	Z35866	SPILL SHEET	1	004831	-		X	X	

COPYRIGHT©1994 - 2008 DEERE & COMPANY Moline, Illinois All rights reserved

(4E24) GRAIN TANK - UPPER PART
TREMIE A GRAIN - PARTIE SUPERIEURE
KORNTANK - OBERTEIL
SERBATOIO GRANO - PARTE SUPERIORE
TANQUE DE GRANO - PARTE SUPERIOR
SPANNMALSTANK - OVRE DEL

KEY	PART NO.	PART NAME	QTY	SERIAL NO.			975	975HY/4	REMARKS
30	AZ24864	PANEL	1	004831	-		X	X	
31	AZ27687	PANEL	1	018098	-		X	X	AR
32	AZ27688	PANEL	1	018098	-		X	X	AR
33	19M7139	CAP SCREW	2				X	X	M8 X 20
34	AZ26782	CABLE	1				X	X	
35	AZ22470	PANEL	1		-	004830	X		
	AZ24865	SHEET	1	004831	-	018097	X		(ORD AZ27110, AZ27687)
36	AZ22471	PANEL	1		-	004830	X		
37	Z33302	HOLDER	1		-	004830	X		
38	Z30992	GUARD	1				X	X	

COPYRIGHT©1994 - 2008 DEERE & COMPANY Moline, Illinois All rights reserved

(4F02) GRAIN TANK ASSEMBLY PARTS
TREMIE A GRAIN-PIECES DE MONTAGE
KORNTANK ANBAUTEILE
SERBATOIO DEL GRANO-PARTI DI MONTAGGIO
TANQUE DE GRANO,PIEZAS DE MONTAJE
SPANNMALSTANK-MONTERINGSDETALJER

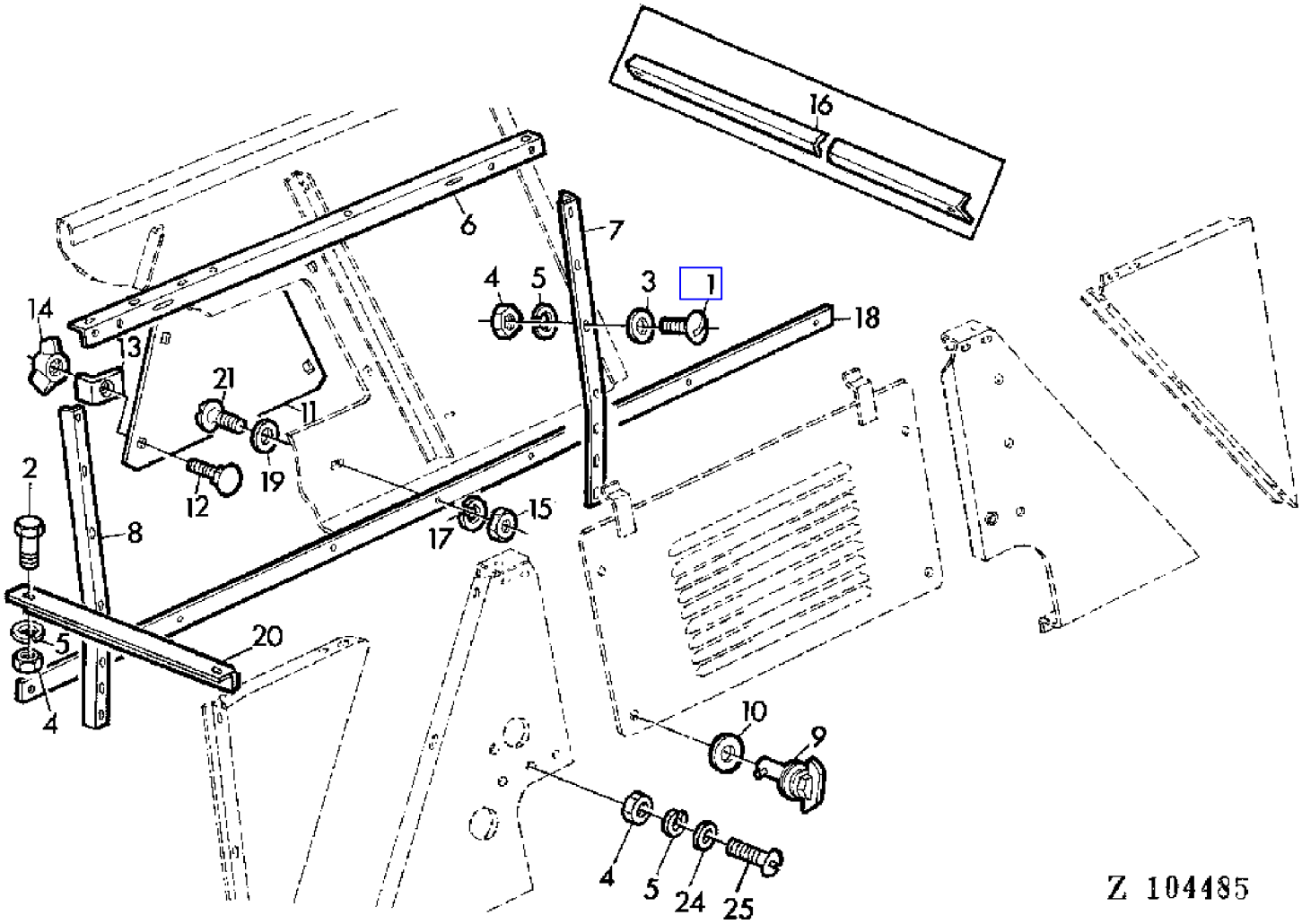

COPYRIGHT©1994 - 2008 DEERE & COMPANY Moline, Illinois All rights reserved

(4F02) GRAIN TANK ASSEMBLY PARTS
TREMIE A GRAIN-PIECES DE MONTAGE
KORNTANK ANBAUTEILE
SERBATOIO DEL GRANO-PARTI DI MONTAGGIO
TANQUE DE GRANO,PIEZAS DE MONTAJE
SPANNMALSTANK-MONTERINGSDETALJER

KEY	PART NO.	PART NAME	QTY	SERIAL NO.		975	975HY/4	REMARKS
1	21M7160	SCREW	AR			X	X	M8 X 18
2	19M7139	CAP SCREW	AR			X	X	M8 X 20
3	24M7036	WASHER	AR			X	X	9 MM
4	14M7029	NUT	AR			X	X	M8
5	12M7008	LOCK WASHER	AR			X	X	8 MM
6	Z34142	ANGLE	1		- 004830	X		
	Z35859	ANGLE	1	004831	-	X	X	
7	Z34145	ANGLE	1		- 004830	X		
	Z35860	ANGLE	1	004831	-	X	X	
8	Z34146	ANGLE	1		- 004830	X		
	Z35865	ANGLE	1	004831	-	X	X	
9	AZ23253	LATCH	2			X	X	
10	Z34136	WASHER	2			X	X	
11	Z33296	COVER	1			X	X	
12	03M7093	BOLT	AR			X	X	M8 X 25
13	Z20367	CLAMP	4			X	X	
14	14M7020	WING NUT	AR			X	X	M8
15	14M7027	NUT	AR			X	X	M6
16	Z34516	ANGLE	1		- 004830	X		
17	12M7012	LOCK WASHER	AR			X	X	6 MM
18	Z34759	RETAINER	1			X	X	
19	Z26250	WASHER	AR			X	X	
20	CA23766	ANGLE	1			X	X	
21	21M7127	SCREW	AR			X	X	M6 X 18

COPYRIGHT©1994 - 2008 DEERE & COMPANY Moline, Illinois All rights reserved

(4F04) GRAIN TANK ASSEMBLY PARTS
TREMIE A GRAIN-PIECES DE MONTAGE
KORNTANK ANBAUTEILE
SERBATOIO DEL GRANO-PARTI DI MONTAGGIO
TANQUE DE GRANO,PIEZAS DE MONTAJE
SPANNMALSTANK-MONTERINGSDETALJER

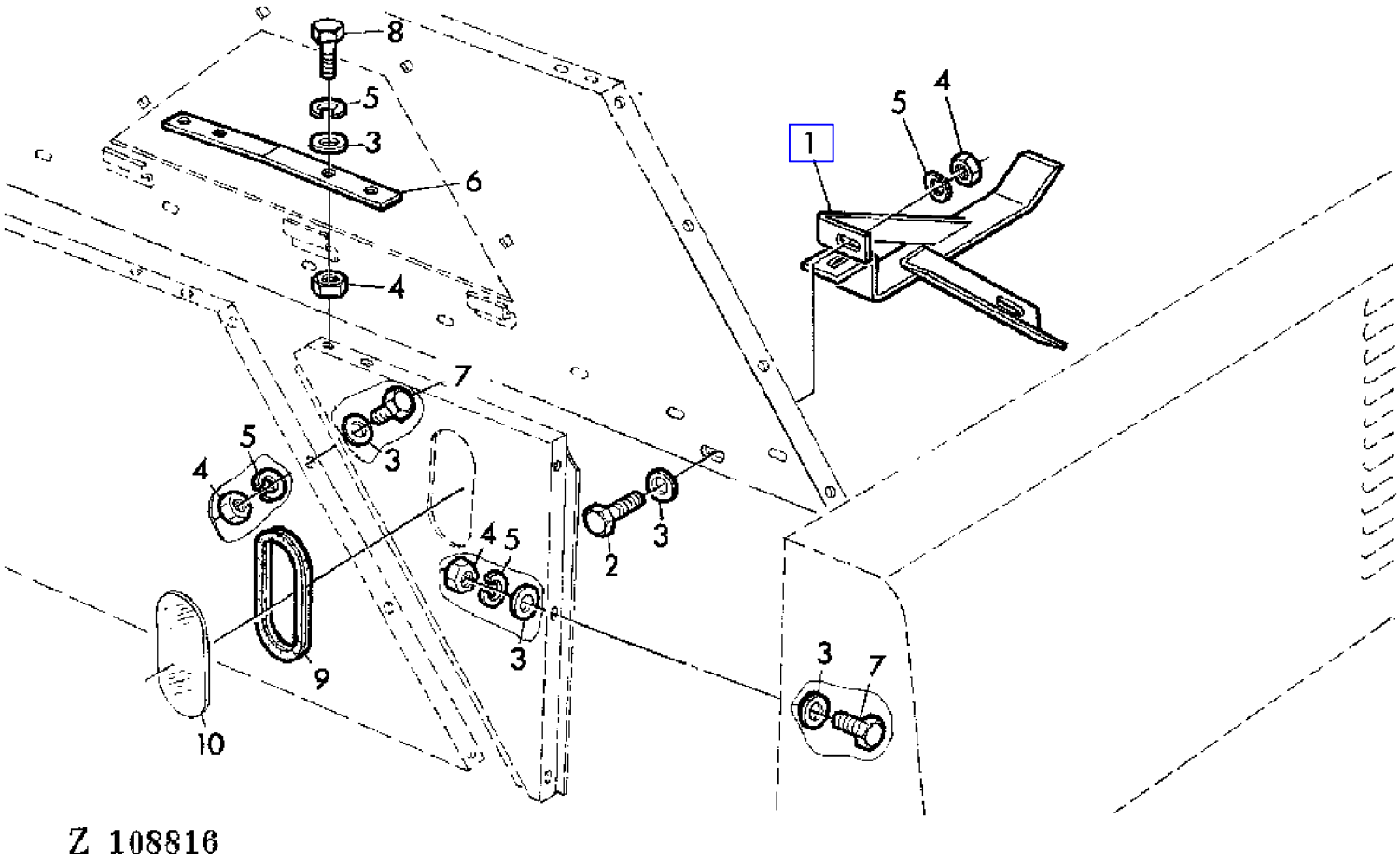

COPYRIGHT©1994 - 2008 DEERE & COMPANY Moline, Illinois All rights reserved

(4F04) GRAIN TANK ASSEMBLY PARTS
TREMIE A GRAIN-PIECES DE MONTAGE
KORNTANK ANBAUTEILE
SERBATOIO DEL GRANO-PARTI DI MONTAGGIO
TANQUE DE GRANO,PIEZAS DE MONTAJE
SPANNMALSTANK-MONTERINGSDETALJER

KEY	PART NO.	PART NAME	QTY	SERIAL NO.	975	975HY/4	REMARKS
1	AZ22900	GUIDE	1	- XXXX	X	X	(ORD AZ35070 W/ AZ35071)
	AZ35070	GUIDE	1	XXXX -	X	X	(SUB FOR AZ22900)
2	19M7139	CAP SCREW	AR		X	X	M8 X 20
3	24M7036	WASHER	AR		X	X	9 MM
4	14M7029	NUT	AR		X	X	M8
5	12M7008	LOCK WASHER	AR		X	X	8 MM
6	Z33295	STRAP	4		X	X	
7	19M7284	CAP SCREW	AR		X	X	M8 X 18
8	19M7163	CAP SCREW	AR		X	X	M8 X 25
9	Z23294	GASKET	2		X	X	
10	Z23295	WINDOWPANE	2		X	X	

COPYRIGHT©1994 - 2008 DEERE & COMPANY Moline, Illinois All rights reserved

(4F08) GRAIN TANK ASSEMBLY PARTS
TREMIE A GRAIN-PIECES DE MONTAGE
KORNTANK-ANBAUTEILE
SERBATOIO GRANO-PARTI MONTAGGIO
TANQUE DE GRANO,PIEZAS DE MONTAJE
SPANNMALSTANK-MONTERINGSDETALJER

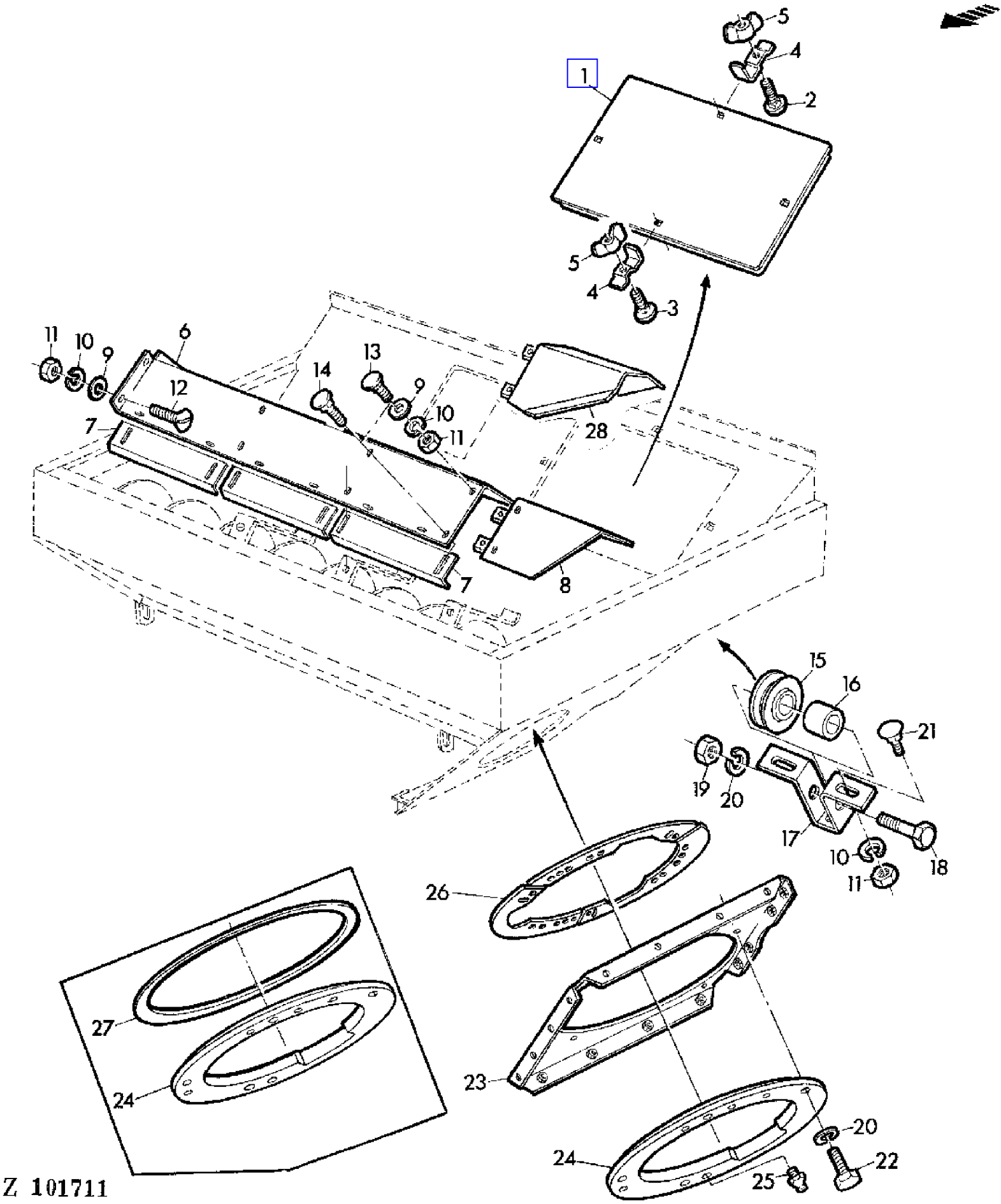

COPYRIGHT©1994 - 2008 DEERE & COMPANY Moline, Illinois All rights reserved

(4F08) GRAIN TANK ASSEMBLY PARTS
TREMIE A GRAIN-PIECES DE MONTAGE
KORNTANK-ANBAUTEILE
SERBATOIO GRANO-PARTI MONTAGGIO
TANQUE DE GRANO,PIEZAS DE MONTAJE
SPANNMALSTANK-MONTERINGSDETALJER

KEY	PART NO.	PART NAME	QTY	SERIAL NO.	975	975HY/4	REMARKS
1	Z35406	COVER	1		X	X	
2	03M7093	BOLT	AR		X	X	M8 X 25
3	03M7094	BOLT	AR		X	X	M8 X 30
4	Z20367	CLAMP	4		X	X	
5	14M7020	WING NUT	4		X	X	M8
6	Z38785	COVER	1		X	X	(SUB FOR Z33249)
	Z42267	SHEET	1		X	X	(A)
7	Z33244	ADJUSTER	6		X	X	
8	AZ27946	COVER	1		X	X	
9	24M7036	WASHER	AR		X	X	9 MM
10	12M7008	LOCK WASHER	AR		X	X	8 MM
11	14M7029	NUT	AR		X	X	M8
12	21M7081	SCREW	AR		X	X	M8 X 15
13	21M7125	SCREW	AR		X	X	M8 X 25
14	21M7160	SCREW	AR		X	X	M8 X 18
15	Z32900	ROLLER	1		X	X	
16	Z34438	SPACER	1		X	X	
17	Z33379	HOLDER	1		X	X	
18	19M7169	CAP SCREW	AR		X	X	M10 X 35
19	14M7140	NUT	AR		X	X	M10
20	12M7013	LOCK WASHER	AR		X	X	10 MM
21	03M7135	BOLT	AR		X	X	M8 X 15
22	19M7183	CAP SCREW	AR		X	X	M10 X 40
23	AZ22558	ROTATOR	1		X	X	
24	Z10895	RING	1	- 008971	X		
	Z11065	CIRCLE	1	008972 -	X	X	
25	58M7007	LUBRICATION FITTING	1		X	X	8 X 1 MM
26	Z36002	SECTOR	3	008972 -	X	X	
27	Z33526	RING	1	- 008971	X		
28	AZ37640	SHIELD	1		X	X	(A) (SUB FOR AZ32306)

(A) ONLY WITH UNLOADING PADDLE
UNIQUEMENT AVEC ROULEAU A PALETTES
NUR BEI PADDELWALZE
SOLO CON TAMBURO A PALETTE
SOLO CON TAMBOR DE PALETAS
ENDAST VID SKOVELAXEL

COPYRIGHT©1994 - 2008 DEERE & COMPANY Moline, Illinois All rights reserved

(4F14) GRAIN TANK COVER
BACHE DE PROTECTION DE TREMIE A GRAIN
KORNTANK - ABDECKUNG
TELA DI PROTEZIONE DEL SERBATOIO GRANO
CUBIERTA DEL TANQUE DE GRANO
SPANNMALSTANKENS SKYDDSDUK

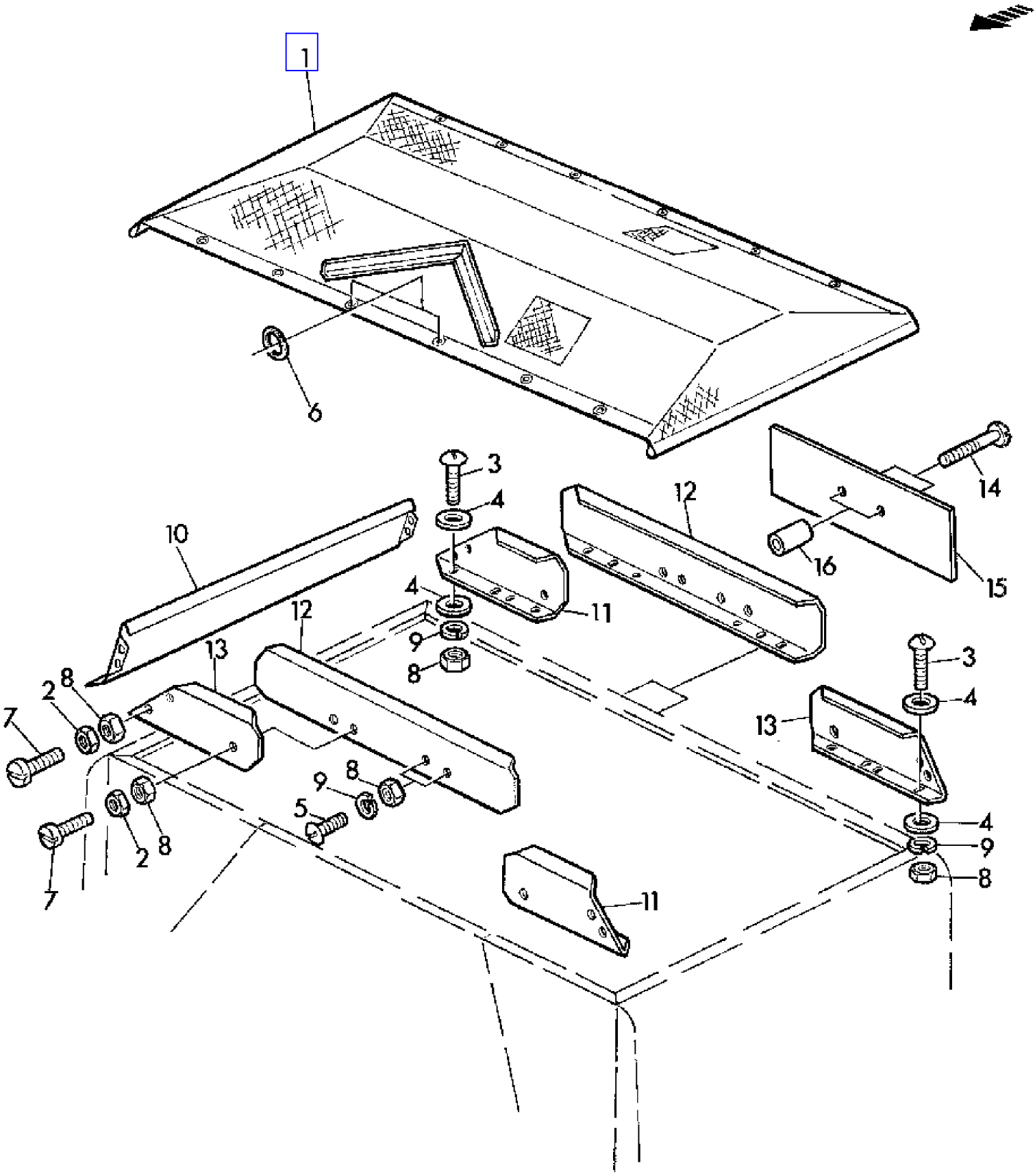

Z 31710

COPYRIGHT©1994 - 2008 DEERE & COMPANY Moline, Illinois All rights reserved

(4F14) GRAIN TANK COVER
BACHE DE PROTECTION DE TREMIE A GRAIN
KORNTANK - ABDECKUNG
TELA DI PROTEZIONE DEL SERBATOIO GRANO
CUBIERTA DEL TANQUE DE GRANO
SPANNMALSTANKENS SKYDDSDUK

KEY	PART NO.	PART NAME	QTY	SERIAL NO.	975	975HY	REMARKS
1	AZ23863	COVER	1		X	X	ASSY, INCL KEY 2-6
2	14M7151	NUT	AR		X	X	M8
3	21M7125	SCREW	AR		X	X	M8 X 25
4	24M7036	WASHER	AR		X	X	9 MM
5	21M7081	SCREW	AR		X	X	M8 X 15
6	Z34842	RING	6		X	X	
7	21M7096	BOLT	AR		X	X	M8 X 25
8	14M7029	NUT	AR		X	X	M8
9	12M7008	LOCK WASHER	AR		X	X	8 MM
10	Z35158	SHEET	1		X	X	
11	Z34845	SHEET	1	- 004830	X		
	Z36431	SHEET	2	004831 -	X	X	
12	Z34844	SHEET	2	- 004830	X		
	Z36432	SHEET	2	004831 -	X	X	
13	Z34846	SHEET	1	- 004830	X		
	Z36430	SHEET	2	004831 -	X	X	
14	21M7161	SCREW	AR		X	X	M8 X 36
15	Z38803	GUARD	AR		X	X	
16	Z24963	SPACER	AR		X	X	

COPYRIGHT©1994 - 2008 DEERE & COMPANY Moline, Illinois All rights reserved

(4F06) GRAIN TANK UNLOADING AUGER
VIS DE VIDANGE DE LA TREMIE A GRAIN
KORNTANK-ENTLEERSCHNECKE
COCLEA SCARICO DEL SERBATOIO GRANO
SINFIN DE DESCARGA DEL TANQUE DE GRANO
SPANNMALSTANKENS TOMNINGSSKRUV

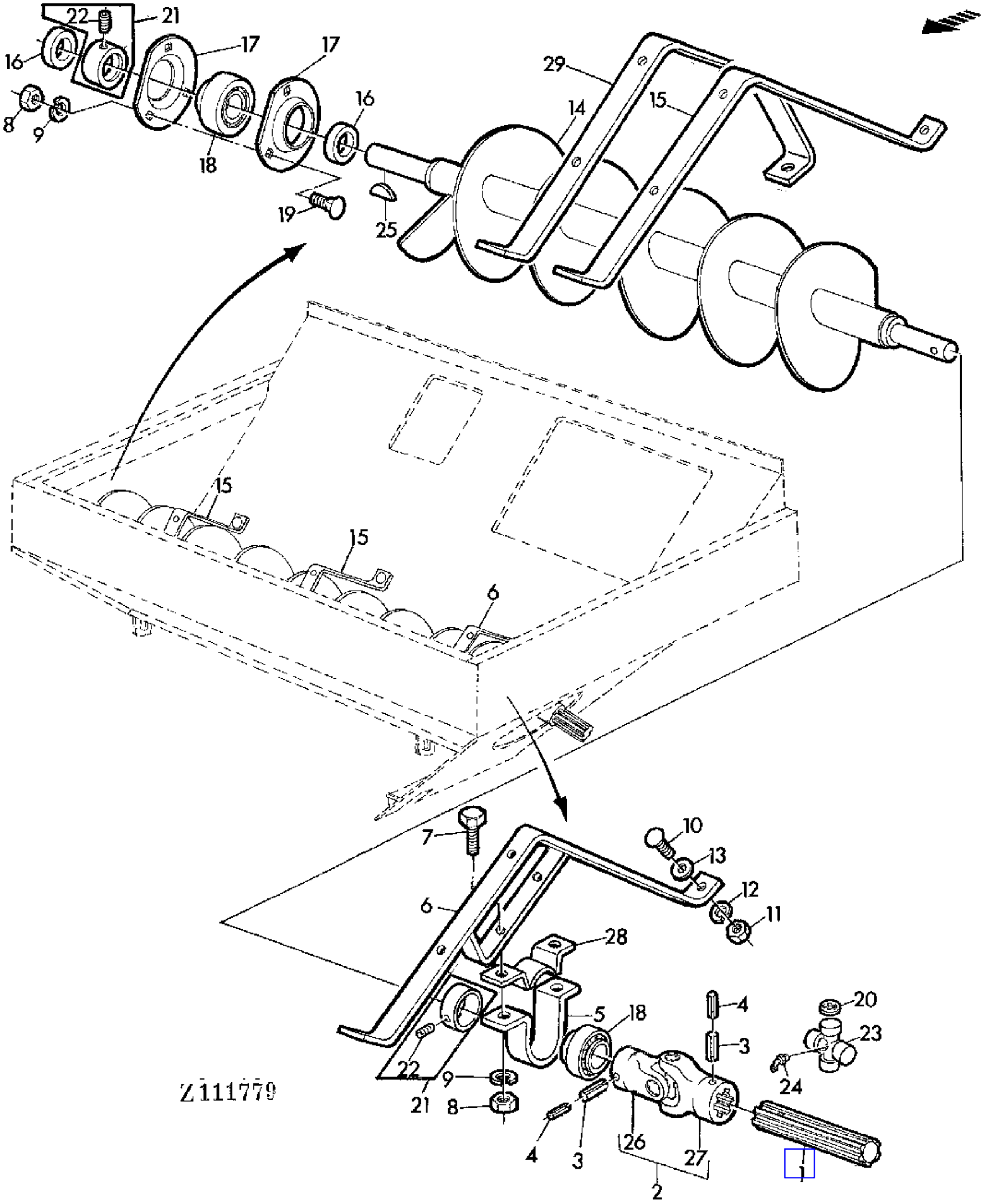

COPYRIGHT©1994 - 2008 DEERE & COMPANY Moline, Illinois All rights reserved

(4F06) GRAIN TANK UNLOADING AUGER
VIS DE VIDANGE DE LA TREMIE A GRAIN
KORNTANK-ENTLEERSCHNECKE
COCLEA SCARICO DEL SERBATOIO GRANO
SINFIN DE DESCARGA DEL TANQUE DE GRANO
SPANNMALSTANKENS TOMNINGSSKRUV

KEY	PART NO.	PART NAME	QTY	SERIAL NO.	975	975HY/4	REMARKS
1	Z33230	SHAFT	1		X	X	
	Z42495	SHAFT	1		X	X	(A)
2	AZ32225	UNIVERSAL JOINT	1		X	X	(SUB FOR AZ28096, AZ32224)
	AZ28096	UNIVERSAL JOINT	1	- 027877	X	X	(ORD AZ32225) (SUB FOR AZ22438)
3	34M7070	SPRING PIN	2		X	X	10 X 45 MM
4	34M7043	SPRING PIN	2		X	X	6 X 45 MM
5	Z35893	BAIL	AR		X	X	
6	AZ28083	BRACE	1		X	X	(SUB FOR AZ22441)
	AZ32323	BRACE	1		X	X	(A)
7	19M7167	CAP SCREW	AR		X	X	M10 X 25
8	14M7140	NUT	AR		X	X	M10
9	12M7013	LOCK WASHER	AR		X	X	10 MM
10	21M7125	SCREW	AR		X	X	M8 X 25
11	14M7029	NUT	AR		X	X	M8
12	12M7008	LOCK WASHER	AR		X	X	8 MM
13	24M7036	WASHER	AR		X	X	9 MM
14	AZ22507	AUGER	1		X	X	
15	Z33242	HOLDER	2		X	X	
16	Z33405	WASHER	1	- 021357	X	X	
	Z22126	WASHER	1	021358 -	X	X	
17	Z38395	PRESSED FLANGED HOUSING	2		X	X	(SUB FOR P45502)
18	JD39103	BALL BEARING	2		X	X	
19	03M7097	BOLT	AR		X	X	M10 X 30
20	Z32725	SNAP RING	4		X	X	(FOR AZ28096)
	Z43195	SNAP RING	4		X	X	(FOR AZ32225)
21	AZ10045	ECCENTRIC LOCKING COLLAR	2		X	X	
22	AZ19844	SET SCREW	2		X	X	KIT
23	AZ21542	SPIDER	1		X	X	INCL KEYS 20,24 (FOR AZ28096)
	AZ32226	SPIDER	1		X	X	(FOR AZ32225)
24	58M5577	LUBRICATION FITTING	1		X	X	(FOR AZ28096)
	58M7010	LUBRICATION FITTING	1		X	X	(FOR AZ32225)
25	26M4228	SHAFT KEY	1		X	X	8 X 11 MM
26	Z11268	UNIVERSAL JOINT YOKE	1		X	X	(FOR AZ28096)
	Z11457	UNIVERSAL JOINT YOKE	1		X	X	(FOR AZ32225)
27	Z11269	UNIVERSAL JOINT YOKE	1		X	X	(FOR AZ28096)
	Z11456	UNIVERSAL JOINT YOKE	1		X	X	(FOR AZ32225)
28	Z35894	BAIL	AR		X	X	
29	Z42266	BAIL	2		X	X	(A)

(A) ONLY WITH UNLOADING PADDLE
UNIQUEMENT AVEC ROULEAU A PALETTES
NUR BEI PADDELWALZE
SOLO CON TAMBURO A PALETTE
SOLO CON TAMBOR DE PALETAS
ENDAST VID SKOVELAXEL

COPYRIGHT©1994 - 2008 DEERE & COMPANY Moline, Illinois All rights reserved

(4F06) GRAIN TANK UNLOADING AUGER
VIS DE VIDANGE DE LA TREMIE A GRAIN
KORNTANK-ENTLEERSCHNECKE
COCLEA SCARICO DEL SERBATOIO GRANO
SINFIN DE DESCARGA DEL TANQUE DE GRANO
SPANNMALSTANKENS TOMNINGSSKRUV

KEY	PART NO.	PART NAME	QTY	SERIAL NO.	975 / 975HY	REMARKS

(A) ONLY WITH UNLOADING PADDLE
UNIQUEMENT AVEC ROULEAU A PALETTES
NUR BEI PADDELWALZE
SOLO CON TAMBURO A PALETTE
SOLO CON TAMBOR DE PALETAS
ENDAST VID SKOVELAXEL

COPYRIGHT©1994 - 2008 DEERE & COMPANY Moline, Illinois All rights reserved

(4G03) GRAIN TANK UNLOADING DRIVE
ENTRAINEMENT DE VIS DE VIDANGE DE TREMIE A GRAIN
KORNTANK-ENTLEER-ANTRIEB
COMANDO DI SCARICO DEL SERBATOIO GRANO
ACCIONAMIENTO DE DESCARGA DEL TANQUE DE GRANO
SPANNMALSTANKENS TOMNINGSSKRUV-DRIVNING

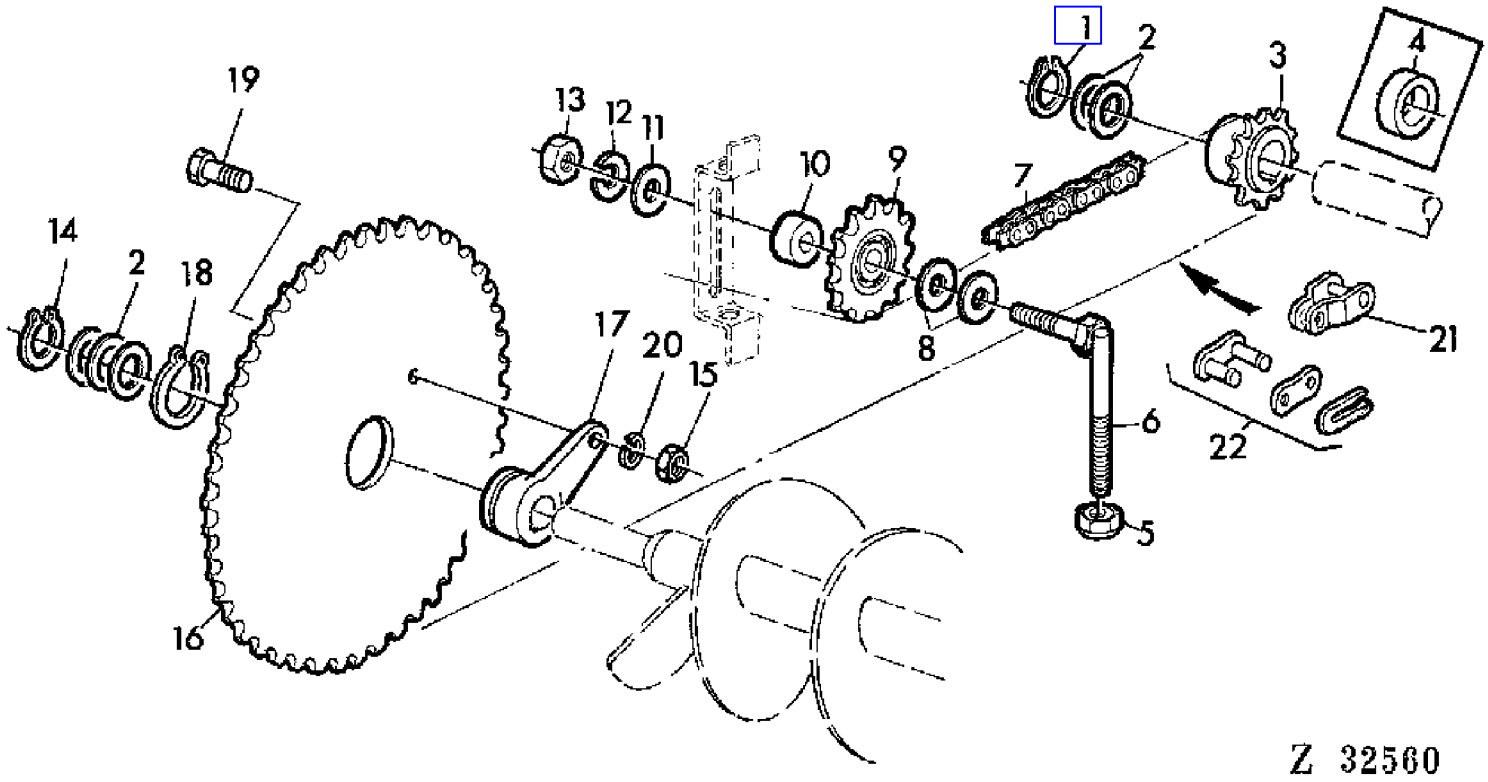

COPYRIGHT©1994 - 2008 DEERE & COMPANY Moline, Illinois All rights reserved

(4G03) GRAIN TANK UNLOADING DRIVE
ENTRAINEMENT DE VIS DE VIDANGE DE TREMIE A GRAIN
KORNTANK-ENTLEER-ANTRIEB
COMANDO DI SCARICO DEL SERBATOIO GRANO
ACCIONAMIENTO DE DESCARGA DEL TANQUE DE GRANO
SPANNMALSTANKENS TOMNINGSSKRUV-DRIVNING

KEY	PART NO.	PART NAME	QTY	SERIAL NO.	975	975HY/4	REMARKS
1	40M1831	SNAP RING	1		X	X	30 X 1,5 MM
2	24M7199	SHIM	AR		X	X	30 X 42 X 0,5 MM
3	Z11079	CHAIN SPROCKET	1		X	X	
4	Z33364	SPACER	AR		X	X	
5	14M7167	LOCK NUT	1		X	X	M10
6	AZ22497	TIGHTENER	1		X	X	
7	AZ22499	LINK CHAIN	1		X	X	L = 123, INCL KEYS 21,22
8	24M3527	WASHER	2		X	X	17 X 24 X 2 MM
9	AZ10272	CHAIN SPROCKET	1		X	X	
10	Z33404	SPACER	1		X	X	
11	24M7103	WASHER	1		X	X	18 MM
12	12M7017	LOCK WASHER	1		X	X	16 MM
13	14M7142	NUT	1		X	X	M16
14	40M1831	SNAP RING	1		X	X	
15	14M7029	NUT	1	021358 -	X	X	M8
16	AZ22500	CHAIN SPROCKET	1	- 021357	X	X	(ORD AZ28136)
	AZ33053	CHAIN SPROCKET	1	021358 -	X	X	(SUB FOR AZ28103)
17	Z11459	HOLDER	1	021358 -	X	X	(SUB FOR Z11233)
18	40M1839	SNAP RING	1	021358 -	X	X	
19	Z38827	CAP SCREW	1	021358 -	X	X	
20	12M7008	LOCK WASHER	1	021358 -	X	X	
21	AZ12882	LINK	1		X	X	
22	AL14209	LINK	1		X	X	
..	AZ28136	CHAIN SPROCKET	1	- 021357	X	X	INCL KEYS 15-20

COPYRIGHT©1994 - 2008 DEERE & COMPANY Moline, Illinois All rights reserved

(4G04) GRAIN TANK UNLOADING-DRIVE I
ENTRAINEMENT DE VIS DE VIDANGE DE TREMIE A GRAIN I
KORNTANK-ENTLEERANTRIEB I
COMANDO SCARICO SERBATOIO GRANO I
ACCIONAMIENTO DE DESCARGA DEL TANQUE DE GRANO I
SPANNMALSTANKENS TOMNINGSSKRUV-DRIVNING I

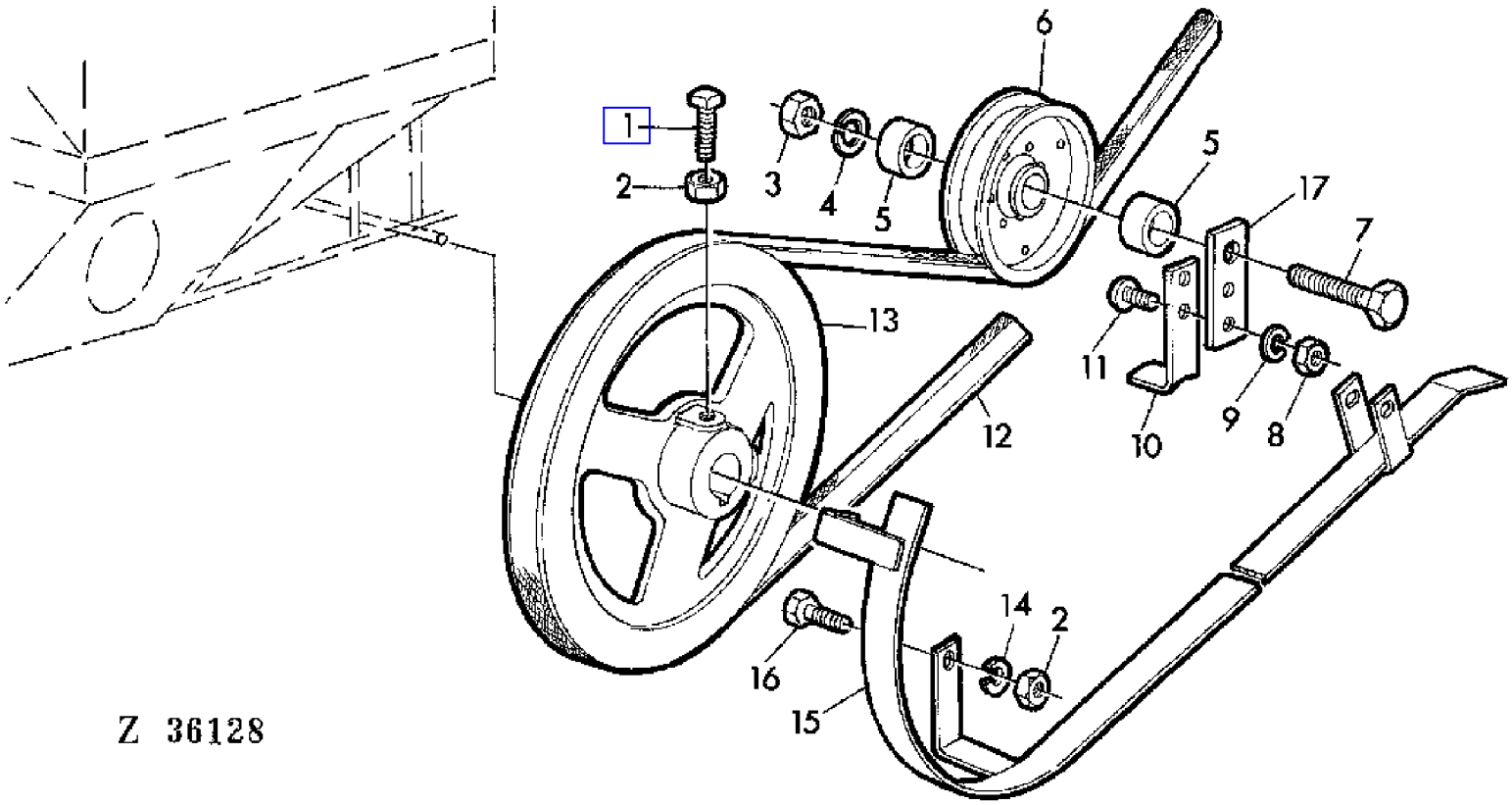

COPYRIGHT©1994 - 2008 DEERE & COMPANY Moline, Illinois All rights reserved

(4G04) GRAIN TANK UNLOADING-DRIVE I
ENTRAINEMENT DE VIS DE VIDANGE DE TREMIE A GRAIN I
KORNTANK-ENTLEERANTRIEB I
COMANDO SCARICO SERBATOIO GRANO I
ACCIONAMIENTO DE DESCARGA DEL TANQUE DE GRANO I
SPANNMALSTANKENS TOMNINGSSKRUV-DRIVNING I

KEY	PART NO.	PART NAME	QTY	SERIAL NO.	975	975HY	REMARKS
1	Z32433	SET SCREW	2		X	X	
2	14M7140	NUT	AR		X	X	M10
3	14M7141	NUT	1		X	X	M14
4	12M7009	LOCK WASHER	1		X	X	14 MM
5	Z33402	SPACER	2		X	X	
6	AP24917	IDLER	1		X	X	
7	19M7291	CAP SCREW	1		X	X	M14 X 90
8	14M7029	NUT	1		X	X	M8
9	12M7008	LOCK WASHER	1		X	X	8 MM
10	Z21892	STRAP	1		X	X	
11	21M7089	SCREW	AR		X	X	M8 X 20
12	Z47911	BELT	1		X	X	(SUB FOR Z33368)
13	Z10880	PULLEY	1		X	X	
14	12M7013	LOCK WASHER	AR		X	X	10 MM
15	AZ22510	GUIDE	1	- XXXX	X	X	(ORD AZ35071 W/ AZ35070)
	AZ35071	GUIDE	1	XXXX -	X	X	(SUB FOR AZ22510)
16	19M7166	CAP SCREW	AR		X	X	M10 X 20
17	Z34742	PLATE	1		X	X	

COPYRIGHT©1994 - 2008 DEERE & COMPANY Moline, Illinois All rights reserved

(4G08) GRAIN TANK UNLOADING-DRIVE II
ENTRAINEMENT DE VIS DE VIDANGE DE TREMIE A GRAIN II
KORNTANK-ENTLEERANTRIEB II
COMANDO SCARICO SERBATOIO GRANO II
ACCIONAMIENTO DE DESCARGA DEL TANQUE DE GRANO II
SPANNMALSTANKENS TOMNINGSSKRUV-DRIVNING II

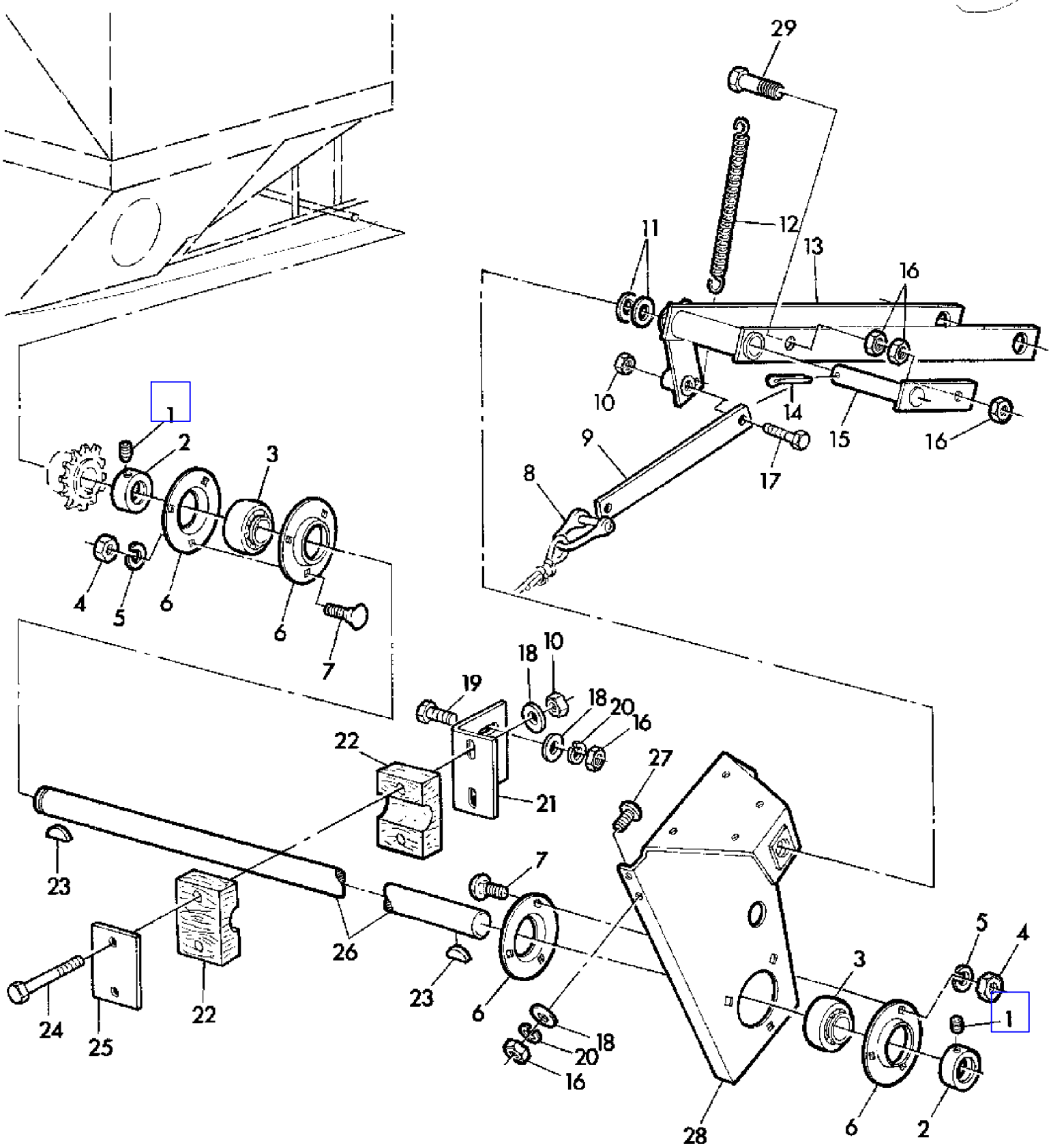

COPYRIGHT©1994 - 2008 DEERE & COMPANY Moline, Illinois All rights reserved

(4G08) GRAIN TANK UNLOADING-DRIVE II
ENTRAINEMENT DE VIS DE VIDANGE DE TREMIE A GRAIN II
KORNTANK-ENTLEERANTRIEB II
COMANDO SCARICO SERBATOIO GRANO II
ACCIONAMIENTO DE DESCARGA DEL TANQUE DE GRANO II
SPANNMALSTANKENS TOMNINGSSKRUV-DRIVNING II

KEY	PART NO.	PART NAME	QTY	SERIAL NO.	975	975HY/4	REMARKS
1	22H975	SET SCREW	2		X	X	
2	AZ10045	ECCENTRIC LOCKING COLLAR	2		X	X	
3	JD39103	BALL BEARING	2		X	X	
4	14M7140	NUT	AR		X	X	M10
5	12M7013	LOCK WASHER	AR		X	X	10 MM
6	Z38395	PRESSED FLANGED HOUSING	4		X	X	
7	03M7084	BOLT	6		X	X	M10 X 25
8	AZ24271	SHACKLE	1		X	X	
9	Z35209	STRAP	1		X	X	
10	14M7166	LOCK NUT	AR		X	X	M8
11	24M7097	WASHER	2		X	X	17 MM
12	Z21325	EXTENSION SPRING	1		X	X	
13	AZ22501	LEVER	1		X	X	
14	11M7020	COTTER PIN	1		X	X	4 X 22 MM
15	AZ22498	LEVER	1		X	X	
16	14M7029	NUT	AR		X	X	M8
17	03M7090	BOLT	1		X	X	M8 X 16
18	24M7036	WASHER	AR		X	X	9 MM
19	19M7284	CAP SCREW	AR		X	X	M8 X 18
20	12M7008	LOCK WASHER	AR		X	X	8 MM
21	Z35957	HOLDER	1		X	X	
22	Z33527	BEARING	2		X	X	
23	26M4228	SHAFT KEY	2		X	X	8 X 11 MM
24	19M7270	CAP SCREW	AR		X	X	M8 X 65
25	Z35956	STRAP	1		X	X	
26	Z33380	SHAFT	1		X	X	
27	21M7160	SCREW	AR		X	X	M8 X 18
28	AZ22509	HOLDER	1		X	X	
29	19M7165	CAP SCREW	1		X	X	M8 X 55

COPYRIGHT©1994 - 2008 DEERE & COMPANY Moline, Illinois All rights reserved

(3B16) GROUND SPEED CONTROL LEVER
LEVIER DE REGLAGE DE LA VITESSE DE DEPLACEMENT
BEDIENUNGSHEBEL-FAHRANTRIEB
LEVA COMANDO DI VELOCITA D'AVANZAMENTO
PALANCA DE MANDO DE LA VELOCIDAD DE MARCHA
SPAK FOR KORHASTIGHETSREGLERING

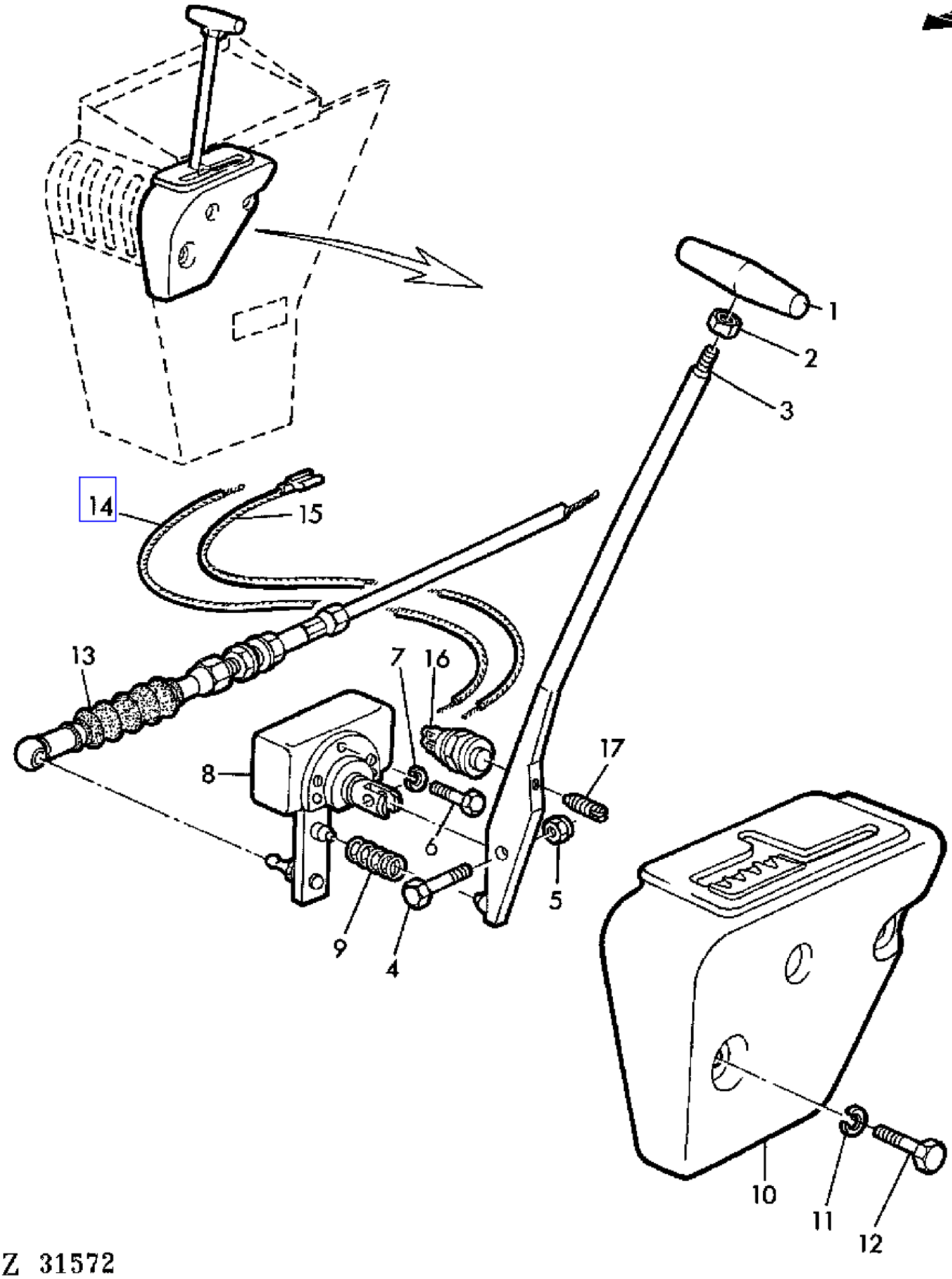

COPYRIGHT©1994 - 2008 DEERE & COMPANY Moline, Illinois All rights reserved

(3B16) GROUND SPEED CONTROL LEVER
LEVIER DE REGLAGE DE LA VITESSE DE DEPLACEMENT
BEDIENUNGSHEBEL-FAHRANTRIEB
LEVA COMANDO DI VELOCITA D'AVANZAMENTO
PALANCA DE MANDO DE LA VELOCIDAD DE MARCHA
SPAK FOR KORHASTIGHETSREGLERING

KEY	PART NO.	PART NAME	QTY	SERIAL NO.	975	975HY/4	REMARKS
1	Z30244	GRIP	1			X	
2	14M7152	NUT	1			X	M10
3	AZ26435	LEVER	1			X	
4	53M7008	SCREW	1			X	M8 X 35 (SUB FOR Z37540)
5	14M7166	LOCK NUT	1			X	M8
6	19M7320	CAP SCREW	3			X	M6 X 40
7	12M7012	LOCK WASHER	AR			X	6 MM
8	AZ26434	REGULATOR	1			X	
9	288SE	SPRING	1			X	
10	Z11246	CONSOLE	1			X	
11	12M7008	LOCK WASHER	AR			X	8 MM
12	19M7269	CAP SCREW	2			X	M8 X 50
13	AZ28521	PUSH PULL CABLE	1			X	
14	Z41636	POWER CORD	1			X	(SUB FOR Z37589)
15	AZ31103	POWER CORD	1			X	(SUB FOR AZ26492)
16	AZ29697	SWITCH	1			X	(SUB FOR Z21979)
17	22M7096	SET SCREW	1			X	5 X 25 MM

COPYRIGHT©1994 - 2008 DEERE & COMPANY Moline, Illinois All rights reserved

(1C25) GUARD-TURBOCHARGER
GARANT-TURBOCOMPRESSEUR
SCHUTZ-TURBOLADER
PROTEZIONE-TURBOCOMPRESSORE
CORAZA-TURBOCOMPRESOR
SKYDD-TURBOAGGREGAT

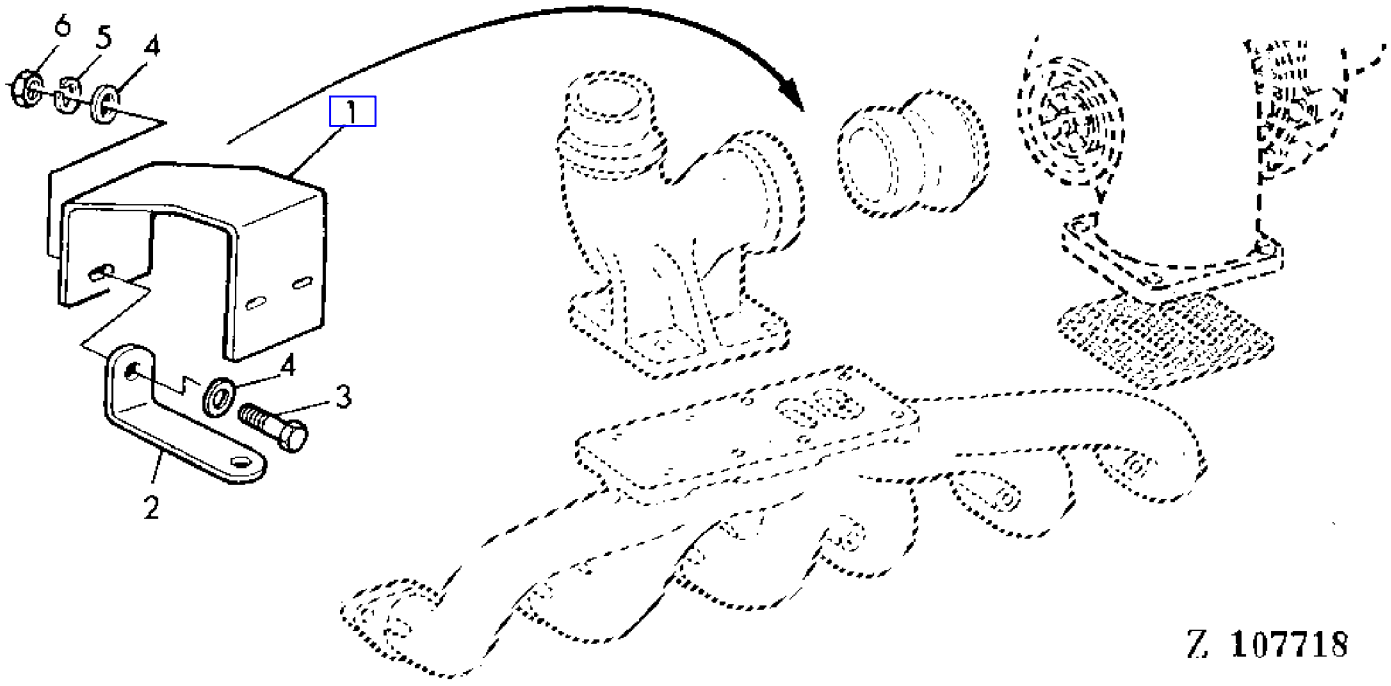

COPYRIGHT©1994 - 2008 DEERE & COMPANY Moline, Illinois All rights reserved

(1C25) GUARD-TURBOCHARGER
GARANT-TURBOCOMPRESSEUR
SCHUTZ-TURBOLADER
PROTEZIONE-TURBOCOMPRESSORE
CORAZA-TURBOCOMPRESOR
SKYDD-TURBOAGGREGAT

KEY	PART NO.	PART NAME	QTY	SERIAL NO.	975	975HY/4	REMARKS
1	Z41048	GUARD	1		X	X	
2	Z39911	HOLDER	3		X	X	
3	19M7077	CAP SCREW	AR		X	X	M6 X 20
4	24M7088	WASHER	AR		X	X	6,6 MM
5	12M7012	LOCK WASHER	AR		X	X	6 MM
6	14M7027	NUT	AR		X	X	M6

COPYRIGHT©1994 - 2008 DEERE & COMPANY Moline, Illinois All rights reserved

(2G10) GUARDS
GARANTS
SCHUTZE
PROTEZIONI
CHAPA Y REJILLA DE PROTECCION
SKYDD

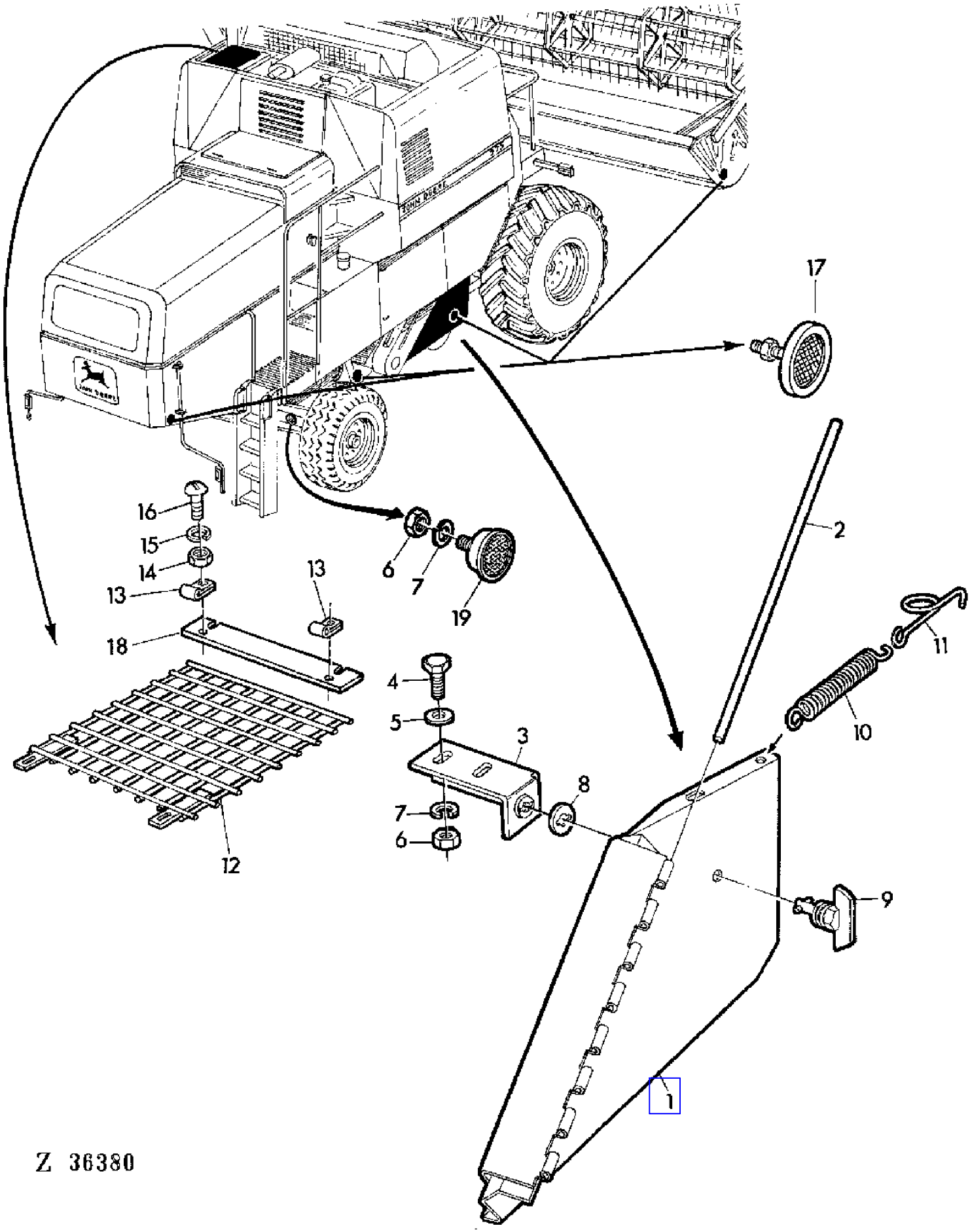

COPYRIGHT©1994 - 2008 DEERE & COMPANY Moline, Illinois All rights reserved

(2G10) GUARDS
GARANTS
SCHUTZE
PROTEZIONI
CHAPA Y REJILLA DE PROTECCION
SKYDD

KEY	PART NO.	PART NAME	QTY	SERIAL NO.	975	975HY	REMARKS
1	AZ23299	GUARD	1		X	X	
2	Z20277	PIN	1		X	X	
3	AZ23300	HOLDER	1		X	X	
4	19M7077	CAP SCREW	2		X	X	M6 X 20
5	Z26250	WASHER	2		X	X	6,5 MM
6	14M7027	NUT	AR		X	X	M6
7	12M7012	LOCK WASHER	AR		X	X	6 MM
8	Z34136	WASHER	1		X	X	
9	AZ23253	LATCH	1		X	X	
10	Z25462	EXTENSION SPRING	1		X	X	
11	Z34398	HOOK	1		X	X	
12	DA21299	GRATE	1		X	X	AR
13	Z22561	CLAMP	2		X	X	AR
14	14M7029	NUT	AR		X	X	M8
15	12H303	LOCK WASHER	2		X	X	8,5 MM
16	21M7081	SCREW	2		X	X	M8 X 15
17	AL26674	REFLECTOR	4		X	X	LH, AR
	AL26674	REFLECTOR	4		X	X	RH, AR
18	CA21302	REINFORCEMENT	1		X	X	
19	L39871	REFLECTOR	2		X	X	(SUB FOR 99M6488)

COPYRIGHT©1994 - 2008 DEERE & COMPANY Moline, Illinois All rights reserved

(2F16) GUARDS (GROSS SHAKER DRIVE)
GARANT (ENTRAINEMENT DU SECOUEUR ROTATIF)
SCHUTZ (QUERSCHUETTLERANTRIEB)
DIFESA (COMANDO DELLO SCUOTITORE INCROCIATO)
CORAZA (MEC.ACCION.DEL SACUDIDOR TRANSVERSAL)
SKYDD (TVARSKAKARDRIVNING)

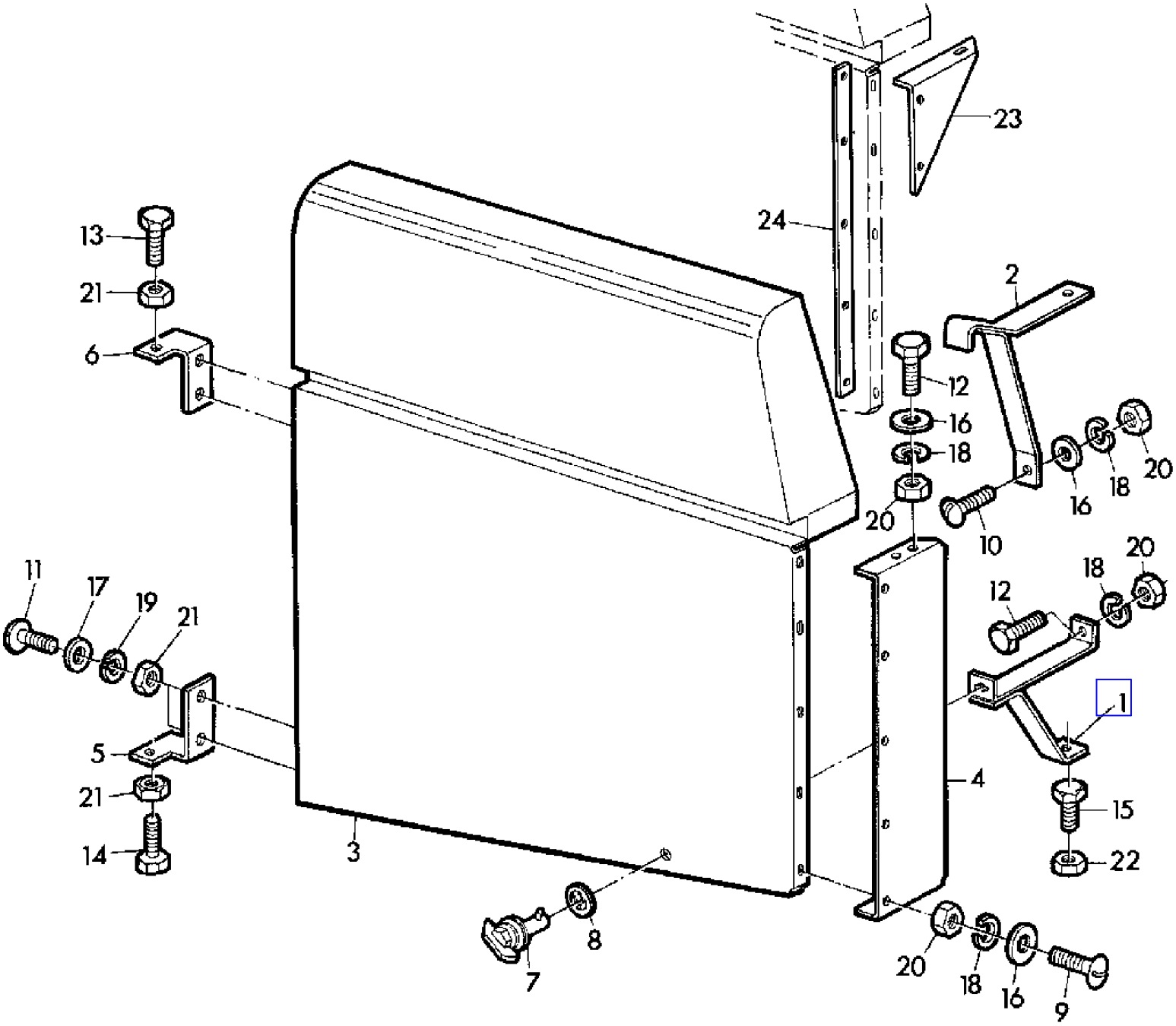

Z 31533

COPYRIGHT©1994 - 2008 DEERE & COMPANY Moline, Illinois All rights reserved

(2F16) GUARDS (GROSS SHAKER DRIVE)
GARANT (ENTRAINEMENT DU SECOUEUR ROTATIF)
SCHUTZ (QUERSCHUETTLERANTRIEB)
DIFESA (COMANDO DELLO SCUOTITORE INCROCIATO)
CORAZA (MEC.ACCION.DEL SACUDIDOR TRANSVERSAL)
SKYDD (TVARSKAKARDRIVNING)

KEY	PART NO.	PART NAME	QTY	SERIAL NO.	975	975HY/4	REMARKS
1	AZ23252	HOLDER	1		X	X	
2	AZ23251	HOLDER	1		X	X	
3	AZ23248	GUARD	1		X	X	
4	Z34369	GUARD	1		X	X	
5	Z34374	HOLDER	1		X	X	LOW
6	Z34375	HOLDER	1		X	X	UP
7	AZ23253	LATCH	1		X	X	
8	Z34136	WASHER	1		X	X	
9	21M7031	SCREW	5		X	X	M6 X 15
10	21M7085	SCREW	1		X	X	M6 X 20
11	21M7089	SCREW	4		X	X	M8 X 20
12	19M7159	CAP SCREW	3		X	X	M6 X 16
13	19M7139	CAP SCREW	1		X	X	M8 X 20
14	19M7288	CAP SCREW	1		X	X	M8 X 30
15	19M7171	CAP SCREW	1		X	X	M12 X 35
16	Z26250	WASHER	8		X	X	6,5 MM
17	24M7036	WASHER	4		X	X	9 MM
18	12M7012	LOCK WASHER	9		X	X	6 MM
19	12M7008	LOCK WASHER	4		X	X	8 MM
20	14M7027	NUT	8		X	X	M6
21	14M7029	NUT	6		X	X	M8
22	14M7168	LOCK NUT	1		X	X	M12
23	Z34887	REINFORCEMENT	1		X	X	(A)
24	Z34880	GUARD	1		X	X	(A)

(A) FOR STRAW SPREADER AND CHOPPER ONLY
UNIQUEMENT POUR EPANDEUR ET BROYEUR DE PAILLE
NUR BEI STROH-STEUER UND HAECKSLER
SOLTANTO PER SPANDI-PAGLIA E TRINCIA-PAGLIA
TAN SOLO PARA DISTRIBUIDOR Y PICADOR DE PAJA
ENDAST FOR HALMSPRIDARE OCH HALMHACK

COPYRIGHT©1994 - 2008 DEERE & COMPANY Moline, Illinois All rights reserved

(2F18) GUARDS,LEFT-HAND
GARANTS GAUCHES
SCHUTZE LINKS
DIFESE SINISTRE
PROTECCIONES,LADO IZQUIERDO
SKYDD,VANSTER

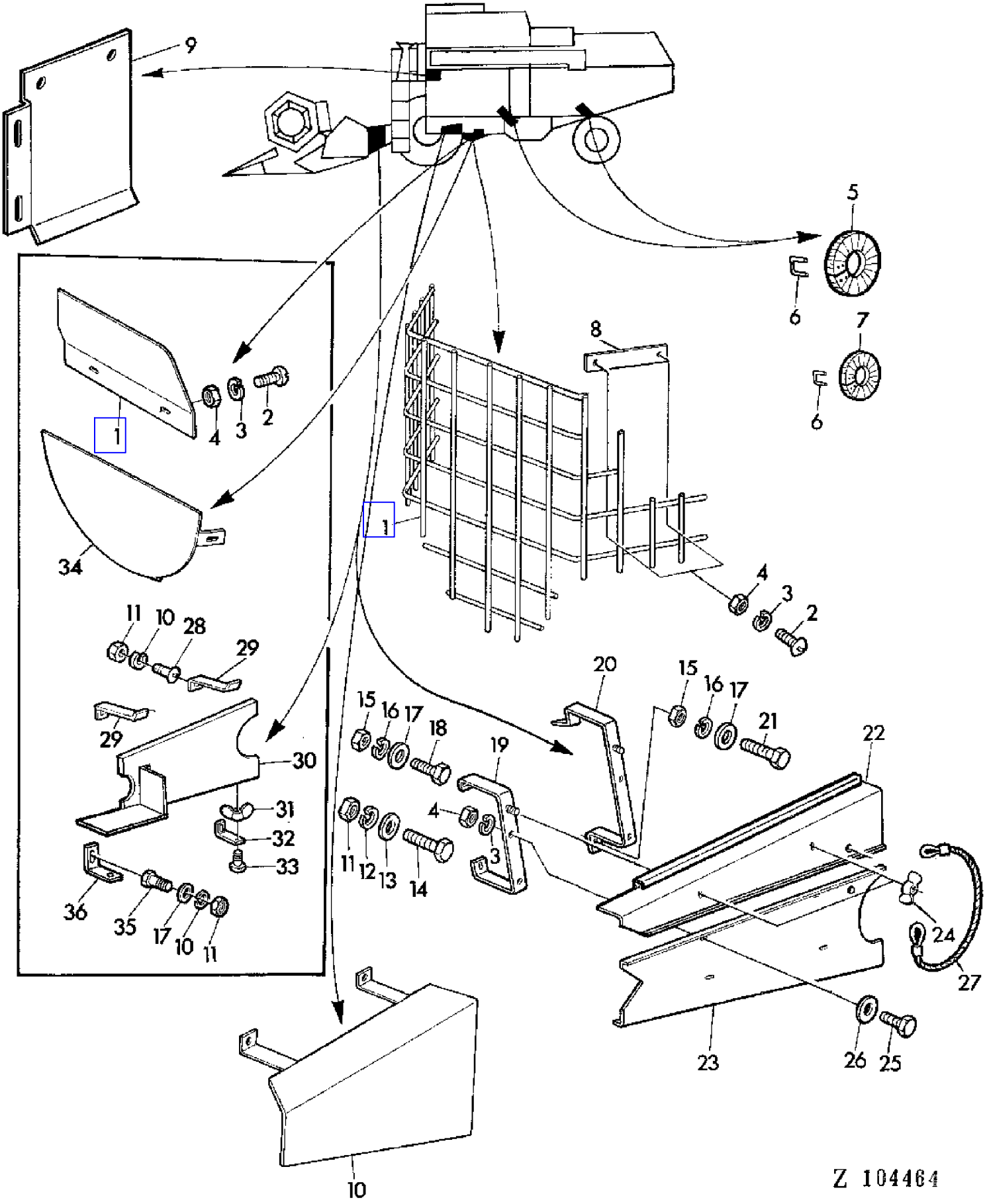

COPYRIGHT©1994 - 2008 DEERE & COMPANY Moline, Illinois All rights reserved

(2F18) GUARDS,LEFT-HAND
GARANTS GAUCHES
SCHUTZE LINKS
DIFESE SINISTRE
PROTECCIONES,LADO IZQUIERDO
SKYDD,VANSTER

KEY	PART NO.	PART NAME	QTY	SERIAL NO.			975	975HY/4	REMARKS
1	Z33259	GUARD	1		-	006195	X		(SUB Z44635)
	AZ22458	GUARD	1	006196	-		X	X	
2	21M7087	SCREW	4		-	006195	X		M6 X 12
	21M7031	SCREW	4	006196	-		X	X	M6 X 15
3	12M7012	LOCK WASHER	AR				X	X	6 MM
4	14M7027	NUT	AR				X	X	M6
5	Z22622	GUARD	2				X	X	
6	Z91612	NAIL	AR				X	X	(SUB FOR Z90003)
7	Z22621	GUARD	4				X	X	
8	Z33255	STRAP	2	006196	-		X	X	
9	AZ23797	GUARD	1				X	X	
10	AZ23834	GUARD	1				X	X	
11	14M7140	NUT	AR				X	X	M10
12	12M7013	LOCK WASHER	AR				X	X	10 MM
13	24M7040	WASHER	AR				X	X	11 MM
14	19M7167	CAP SCREW	1				X	X	M10 X 25
15	14M7029	NUT	AR				X	X	M9
16	12M7008	LOCK WASHER	AR				X	X	8 MM
17	24M7036	WASHER	AR				X	X	9 MM
18	19M7139	CAP SCREW	1	006196	-		X	X	M8 X 20
19	AZ25942	HOLDER	1	013568	-	025572	X	X	(A)
	AZ24892	HOLDER	1	006196	-		X	X	
	AZ28927	HOLDER	1	025573	-		X		(A)
20	AZ24926	HOLDER	1	006196	-		X	X	
	AZ25943	HOLDER	1	006196	-		X	X	(A)
21	19M7163	CAP SCREW	2				X	X	M8 X 25
22	Z43582	GUARD	1	006196	-		X	X	(SUB FOR Z35917)
	Z43581	GUARD	1	013568	-		X	X	(A) (SUB FOR Z36948)
23	Z35927	GUARD	1	006196	-		X	X	
	Z36947	GUARD	1	006196	-		X	X	(A)
24	Z20285	WING NUT	2	006196	-		X	X	8 MM
25	19M7159	CAP SCREW	2				X	X	M6 X 16
26	Z26250	WASHER	AR	006196	-		X	X	7 MM
27	AZ26782	CABLE	1				X	X	
28	03M7017	BOLT	2				X		M10 X 25
29	Z30542	ANGLE	2		-	006195	X		
30	AZ22400	GUARD	1		-	006195	X		
	AZ32111	SHIELD	1		-	006195	X		(A) (SUB FOR AZ22399)

(A) FOR FEEDER CONVEYOR LONG
POUR CONVOYEUR D'ALIMENTATION LONG
FUER LANGEN SCHRAEGFOERDERER
PER COLLO ALIMENTATORE LUNGO
PARA ELEVADOR DE MIES LARGO
FOR INMATNINGSELEVATOR,LANG

COPYRIGHT©1994 - 2008 DEERE & COMPANY Moline, Illinois All rights reserved

(2F18) GUARDS,LEFT-HAND
GARANTS GAUCHES
SCHUTZE LINKS
DIFESE SINISTRE
PROTECCIONES,LADO IZQUIERDO
SKYDD,VANSTER

KEY	PART NO.	PART NAME	QTY	SERIAL NO.	975	975HY/4	REMARKS
31	14M7025	WING NUT	1		X		M10
32	Z30541	ANGLE	1	- 006195	X		
33	03M7084	BOLT	1		X		M10 X 25
34	AZ22461	GUARD	1	- 006195	X		
35	19M7168	CAP SCREW	1		X		M10 X 30
36	Z30540	ANGLE	1	- 006195	X		

(A) FOR FEEDER CONVEYOR LONG
POUR CONVOYEUR D'ALIMENTATION LONG
FUER LANGEN SCHRAEGFOERDERER
PER COLLO ALIMENTATORE LUNGO
PARA ELEVADOR DE MIES LARGO
FOR INMATNINGSELEVATOR,LANG

COPYRIGHT©1994 - 2008 DEERE & COMPANY Moline, Illinois All rights reserved

(PC4180) 975, 975HY/4 Combines

(2H10) GUARDS,LEFT-HAND
GARANTS,COTE GAUCHE
SCHUTZE LINKS
PROTEZIONI,LATO SINISTRO
CHAPA Y REJILLA DE PROTECCION,LADO IZQUIERDO
SKIDD,VANSTER

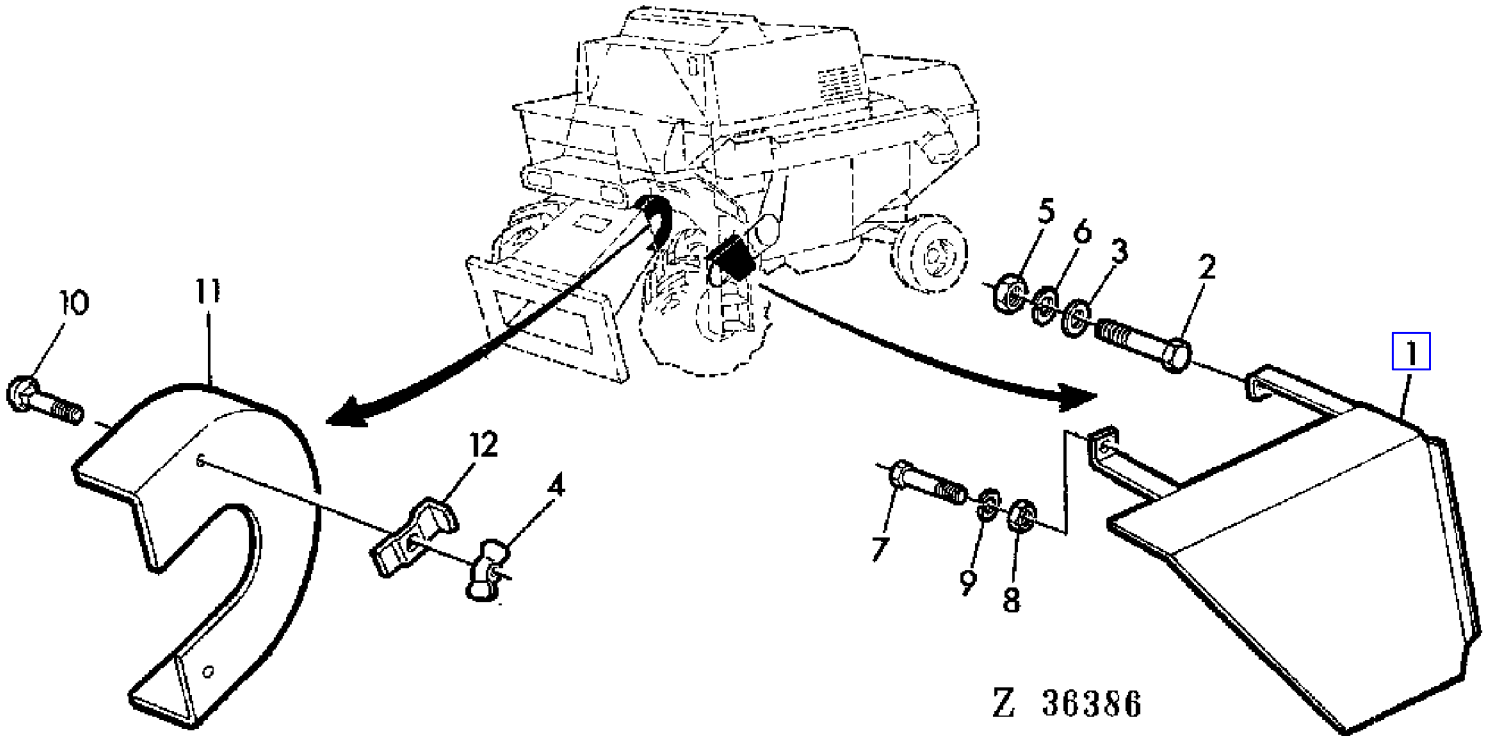

COPYRIGHT©1994 - 2008 DEERE & COMPANY Moline, Illinois All rights reserved

(2H10) GUARDS,LEFT-HAND
GARANTS,COTE GAUCHE
SCHUTZE LINKS
PROTEZIONI,LATO SINISTRO
CHAPA Y REJILLA DE PROTECCION,LADO IZQUIERDO
SKIDD,VANSTER

KEY	PART NO.	PART NAME	QTY	SERIAL NO.	975	975HY/4	REMARKS
1	AZ29885	GUARD	1		X		
2	19M7180	CAP SCREW	1		X		M10 X 45
3	24M7040	WASHER	AR		X		11 MM
4	14M7020	WING NUT	AR		X		M8
5	14M7140	NUT	AR		X		M10
6	12M7013	LOCK WASHER	AR		X		10 MM
7	19M7298	CAP SCREW	1		X		M8 X 35
8	14M7029	NUT	AR		X		M8
9	12M7008	LOCK WASHER	AR		X		8 MM
10	03M7054	BOLT	2		X		M8 X 20
11	Z40268	GUARD	1		X		
12	Z20367	CLAMP	2		X		

COPYRIGHT©1994 - 2008 DEERE & COMPANY Moline, Illinois All rights reserved

(2F20) GUARDS,RIGHT-HAND
GARANTS DROITS
SCHUTZE RECHTS
DIFESE DESTRE
PROTECCIONES,LADO DERECHO
SKYDD,HOGER

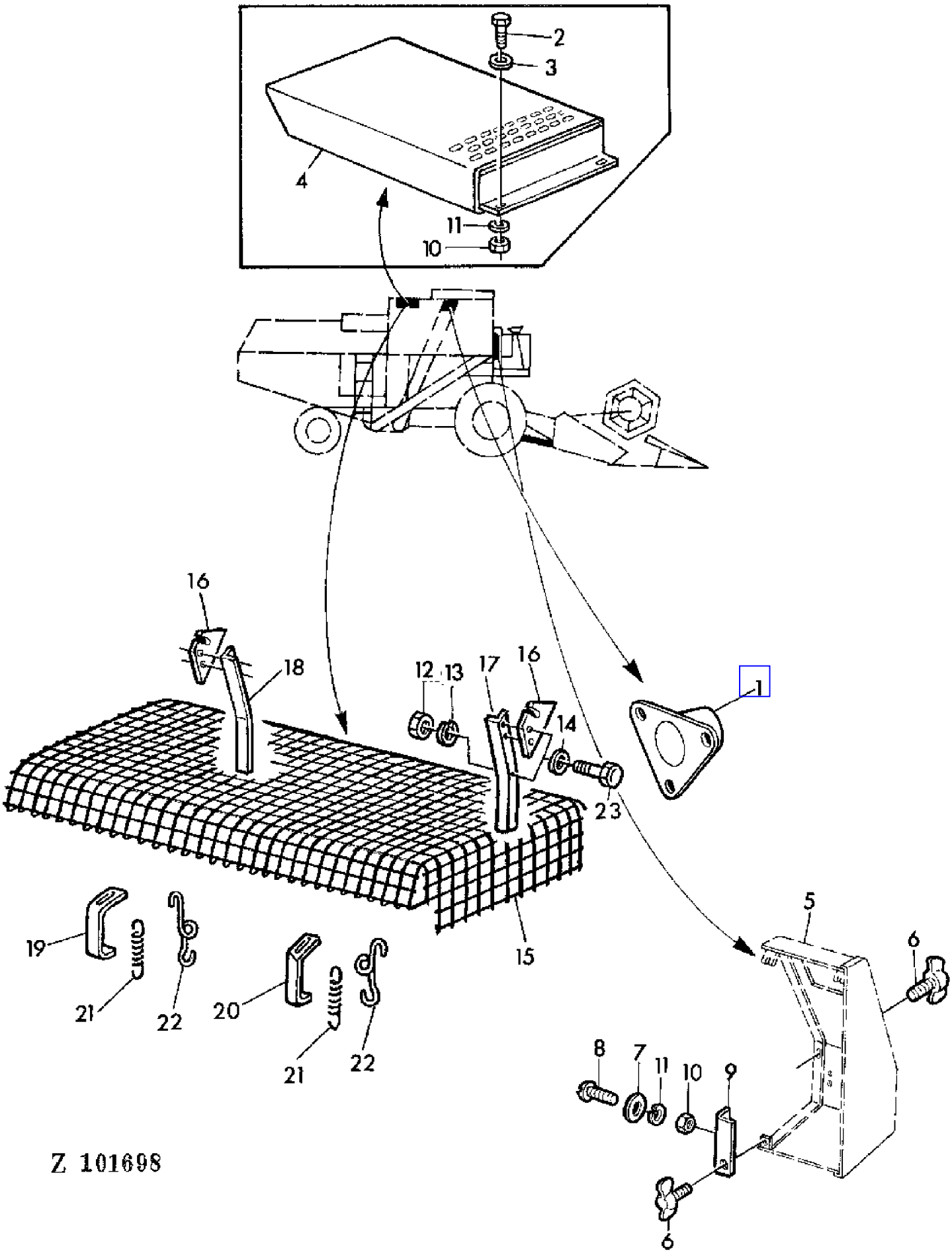

COPYRIGHT©1994 - 2008 DEERE & COMPANY Moline, Illinois All rights reserved

(2F20) GUARDS,RIGHT-HAND
GARANTS DROITS
SCHUTZE RECHTS
DIFESE DESTRE
PROTECCIONES,LADO DERECHO
SKYDD,HOGER

KEY	PART NO.	PART NAME	QTY	SERIAL NO.		975	975HY/4	REMARKS
1	Z38381	GUARD	1		- 016667	X	X	(SUB FOR Z24113, Z36139)
	Z38380	GUARD	1	016668	-	X	X	(SUB FOR Z35647)
2	19M7159	CAP SCREW	4			X		M6 X 16
3	Z26250	WASHER	4			X		7 MM
4	AZ24900	GUARD	1		- 015187	X		
5	.....	GUARD	1			X	X	(ORD AZ22860)
6	21M7208	WING SCREW	2			X	X	M8 X 12
7	24M7088	WASHER	1			X	X	6 MM
8	21M7031	SCREW	1			X	X	M6 X 15
9	Z34182	ANGLE	1			X	X	(ORD Z45011)
10	14M7027	NUT	AR			X	X	M6
11	12M7012	LOCK WASHER	AR			X	X	6 MM
12	14M7029	NUT	AR			X	X	M8 X 20
13	12M7008	LOCK WASHER	AR			X	X	8 MM
14	24M7036	WASHER	AR			X	X	9 MM
15	AZ27237	GRATE	1	015188	-	X	X	
16	Z38128	HOLDER	2	015188	-	X	X	
17	Z38129	ANGLE	1	015188	-	X	X	RH
18	Z38130	ANGLE	1	015188	-	X	X	LH
19	Z38126	HOLDER	1	015188	-	X	X	LH
20	Z38132	HOLDER	1	015188	-	X	X	RH
21	Z21613	EXTENSION SPRING	2	015188	-	X	X	
22	Z34398	HOOK	2	015188	-	X	X	
23	19M7139	CAP SCREW	8			X	X	M8 X 20

COPYRIGHT©1994 - 2008 DEERE & COMPANY Moline, Illinois All rights reserved

(2H09) GUARDS,RIGHT-HAND
GARANTS,COTE DROIT
SCHUTZE RECHTS
PROTEZIONI,LATO DESTRO
CHAPA Y REJILLA DE PROTECCION,LADO DERECHO
SKYDD,HOGER

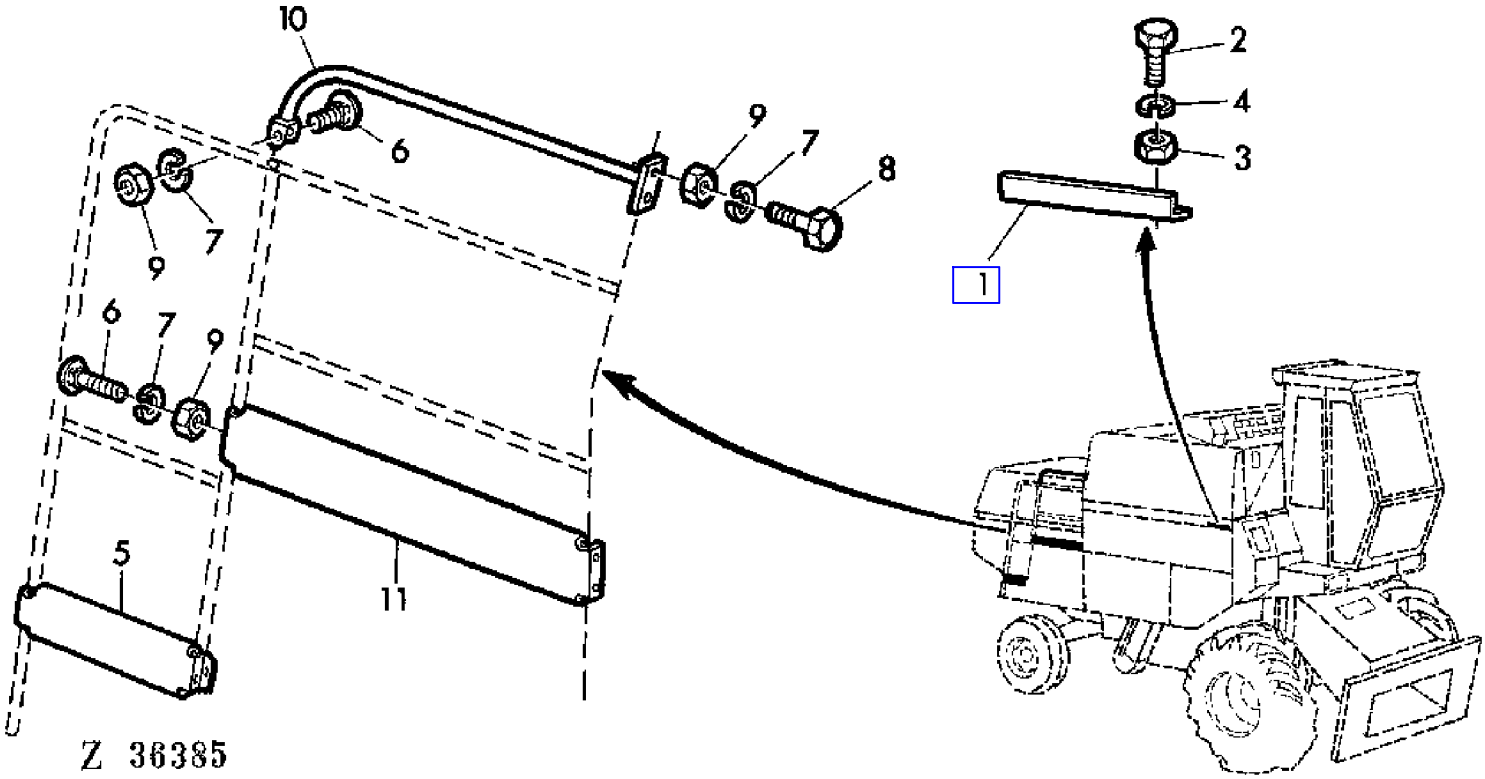

COPYRIGHT©1994 - 2008 DEERE & COMPANY Moline, Illinois All rights reserved

(2H09) GUARDS,RIGHT-HAND
GARANTS,COTE DROIT
SCHUTZE RECHTS
PROTEZIONI,LATO DESTRO
CHAPA Y REJILLA DE PROTECCION,LADO DERECHO
SKYDD,HOGER

KEY	PART NO.	PART NAME	QTY	SERIAL NO.	975	975HY/4	REMARKS
1	Z40257	ANGLE	1		X	X	
2	19M6614	CAP SCREW	2		X	X	M6 X 12
3	14M7027	NUT	AR		X	X	M6
4	12M7012	LOCK WASHER	AR		X	X	6 MM
5	Z40266	RETAINER	1		X	X	
6	21M7205	SCREW	3		X	X	M8 X 45
7	12M7008	LOCK WASHER	AR		X	X	8 MM
8	19M7139	CAP SCREW	4		X	X	M8 X 20
9	14M7029	NUT	AR		X	X	M8
10	AZ29890	HANDRAIL	1		X	X	
11	Z40265	RETAINER	1		X	X	

COPYRIGHT©1994 - 2008 DEERE & COMPANY Moline, Illinois All rights reserved

(3A14) HANDRAILS-OPERATOR'S CAB
GARDE-CORPS DE CABINE
GELAENDER-FAHRERKABINE
PASSAMANI DELLA CABINA
PASAMANOS DE CABINA
RACKE FOR FORARHYTT

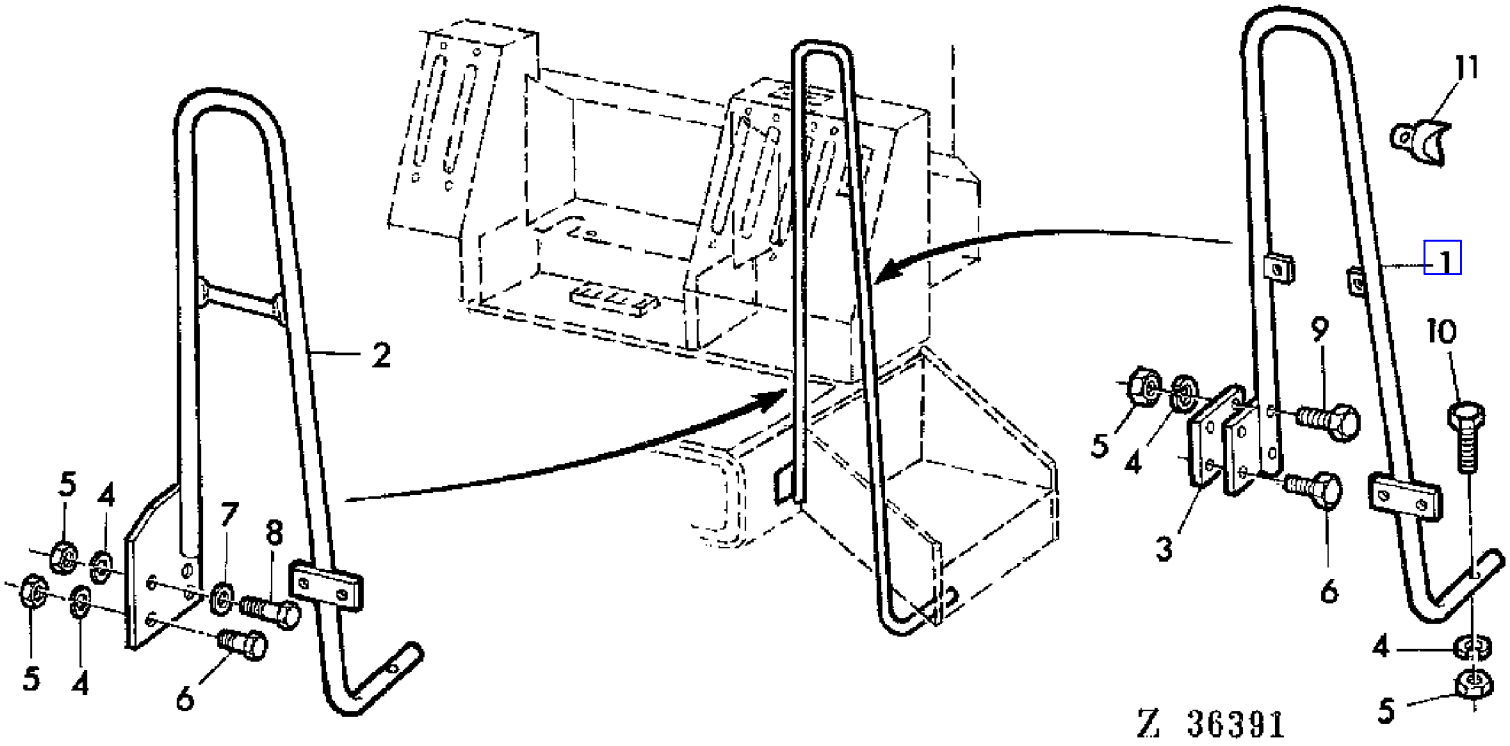

COPYRIGHT©1994 - 2008 DEERE & COMPANY Moline, Illinois All rights reserved

(3A14) HANDRAILS-OPERATOR'S CAB
GARDE-CORPS DE CABINE
GELAENDER-FAHRERKABINE
PASSAMANI DELLA CABINA
PASAMANOS DE CABINA
RACKE FOR FORARHYTT

KEY	PART NO.	PART NAME	QTY	SERIAL NO.	975	975HY	REMARKS
1	DA21238	RAMP	1		X	X	(SUB FOR DA19457)
2	AZ30527	HANDRAIL	1		X	X	(AR)
3	CA19458	PLATE	1		X	X	
4	12M7008	LOCK WASHER	AR		X	X	8 MM
5	14M7029	NUT	AR		X	X	M8
6	19M7139	CAP SCREW	AR		X	X	M8 X 20
7	24M7036	WASHER	AR		X	X	9 MM
8	19M7163	CAP SCREW	AR		X	X	M8 X 25
9	19M7269	CAP SCREW	AR		X	X	M8 X 50
10	19M7323	CAP SCREW	AR		X	X	M8 X 40
11	Z29723	SLEEVE	2		X		

COPYRIGHT©1994 - 2008 DEERE & COMPANY Moline, Illinois All rights reserved

(3E10) HANDRAILS-OPERATOR'S PLATFORM
GARDE-CORPS-PLATE-FORME DE CONDUITE
GELAENDER-FAHRERPLATTFORM
PASSAMANI DELLA PIATTAFORMA DI CONDUZIONE
PASAMANOS DE LA PLATAFORMA DE CONDUCCION
RACKE FOR FORARPLATTFORM

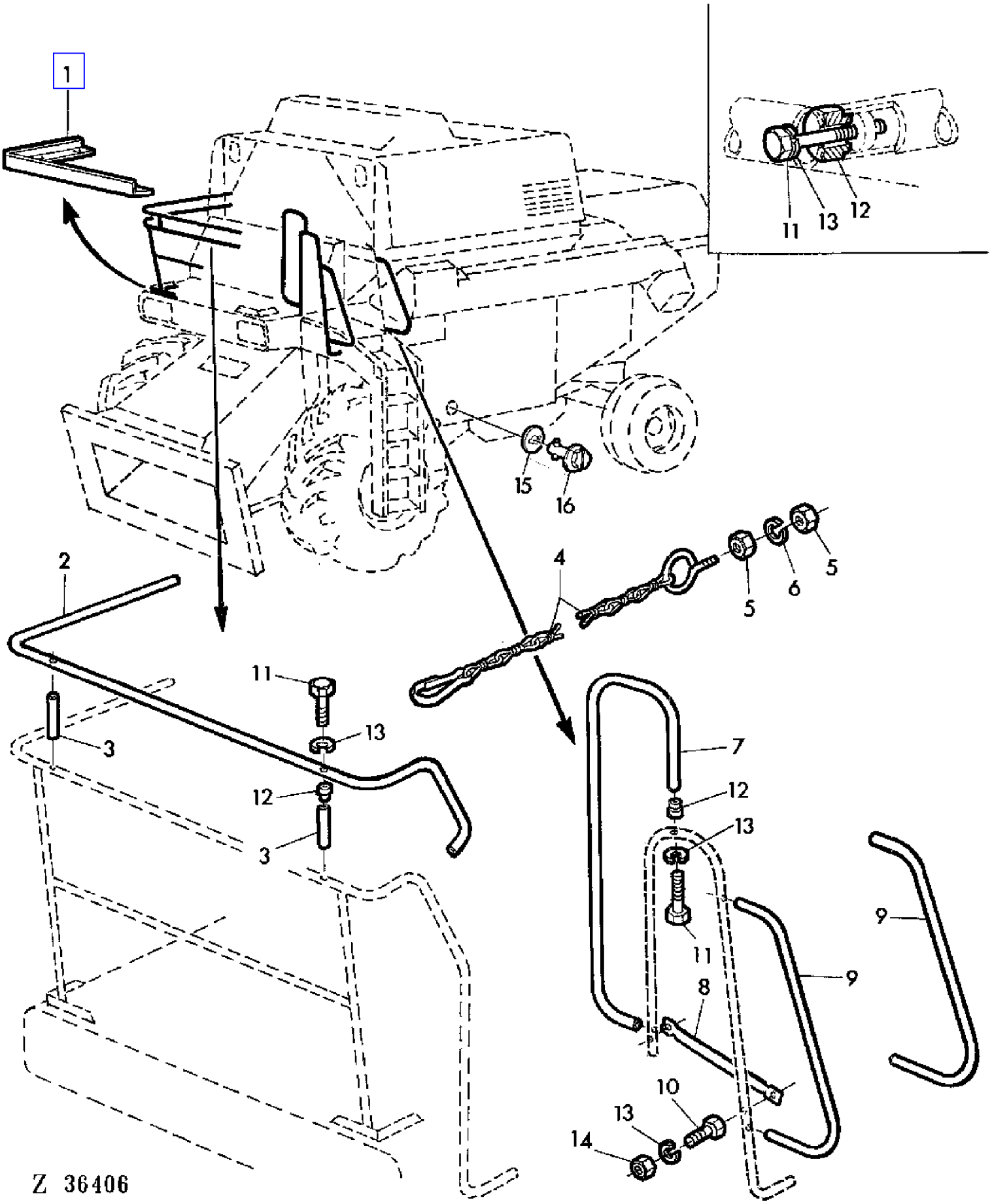

COPYRIGHT©1994 - 2008 DEERE & COMPANY Moline, Illinois All rights reserved

(3E10) HANDRAILS-OPERATOR'S PLATFORM
GARDE-CORPS-PLATE-FORME DE CONDUITE
GELAENDER-FAHRERPLATTFORM
PASSAMANI DELLA PIATTAFORMA DI CONDUZIONE
PASAMANOS DE LA PLATAFORMA DE CONDUCCION
RACKE FOR FORARPLATTFORM

KEY	PART NO.	PART NAME	QTY	SERIAL NO.	975	975HY/4	REMARKS
1	Z40281	SHIELD	1		X	X	AR, LH
	Z40280	REINFORCEMENT	1		X	X	AR, RH
2	AZ21779	HANDRAIL	1		X	X	
3	AZ21762	ROD	2		X	X	AR
4	AZ29878	LINK CHAIN	1		X	X	
5	14M7027	NUT	AR		X	X	M6
6	12M7012	LOCK WASHER	AR		X	X	6 MM
7	AZ29882	HANDRAIL	1		X	X	AR
8	Z40795	BRACE	1		X	X	AR
9	AZ29881	HANDRAIL	2		X	X	
10	19M7295	CAP SCREW	AR		X	X	M8 X 45
11	19M7185	CAP SCREW	AR		X	X	M8 X 60
12	Z29723	SLEEVE	AR		X	X	
13	12M7008	LOCK WASHER	AR		X	X	8 MM
14	14M7029	NUT	AR		X	X	M8
15	Z34136	WASHER	AR		X	X	
16	AZ26107	LATCH	AR		X	X	

COPYRIGHT©1994 - 2008 DEERE & COMPANY Moline, Illinois All rights reserved

(3D19) HEATER AND EVAPORATOR-AIR CONDITIONED CAB
CHAUFFAGE ET EVAPORATEUR-CABINE CLIMATISEE
HEIZUNG UND VERDAMPFER-KABINE MIT KLIMAANLAGE
RISCALDAMENTO E EVAPORATORE-CABINA CONDIZIONATA
CALENTADOR Y EVAPORADOR-CABINA CON AIRE ACONDICIONADO
HYTTVAERMARE OCH FORANGARE-HYTT MED LUFTKONDITIONERING

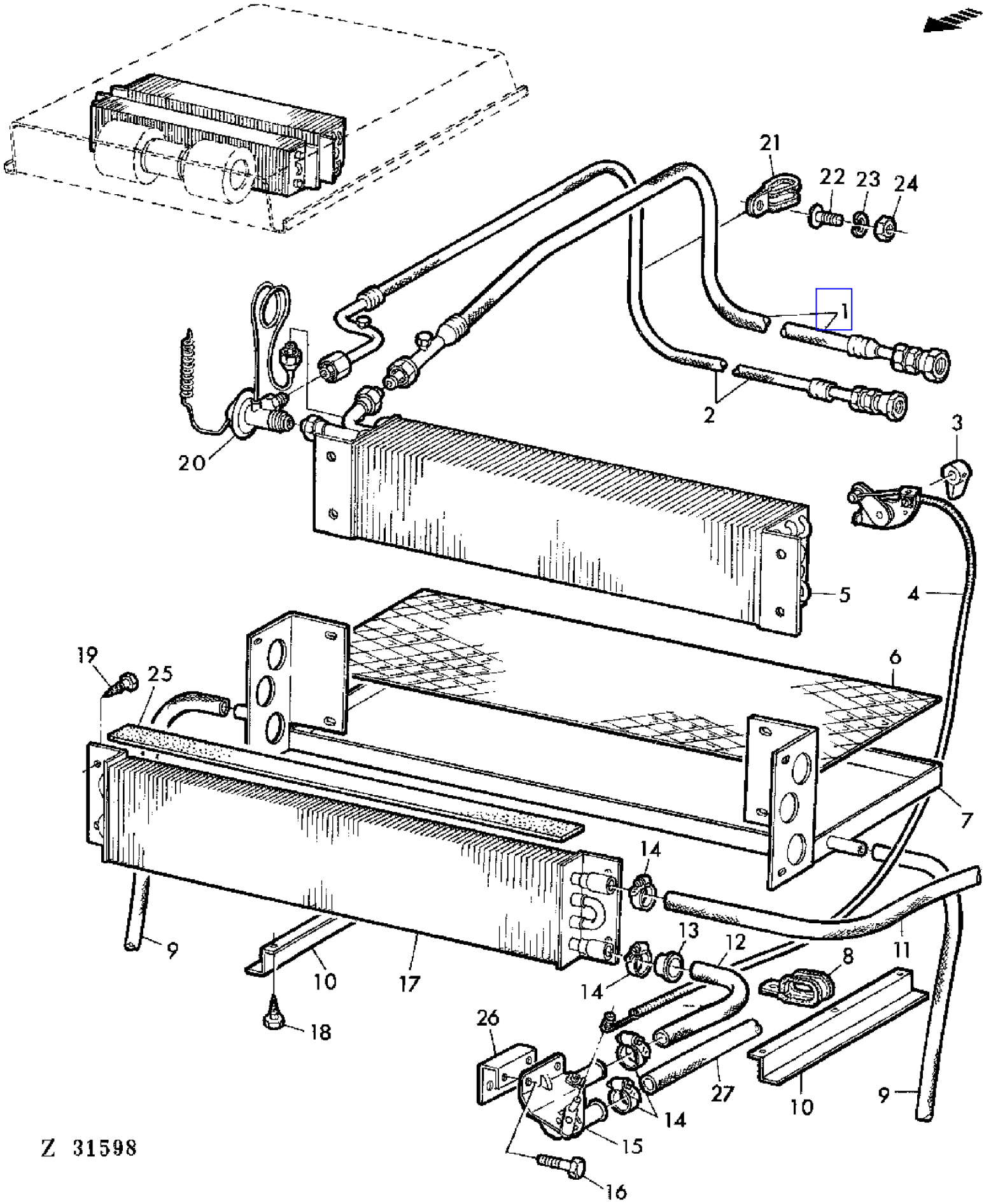

COPYRIGHT©1994 - 2008 DEERE & COMPANY Moline, Illinois All rights reserved

(3D19) HEATER AND EVAPORATOR-AIR CONDITIONED CAB
CHAUFFAGE ET EVAPORATEUR-CABINE CLIMATISEE
HEIZUNG UND VERDAMPFER-KABINE MIT KLIMAANLAGE
RISCALDAMENTO E EVAPORATORE-CABINA CONDIZIONATA
CALENTADOR Y EVAPORADOR-CABINA CON AIRE ACONDICIONADO
HYTTVAERMARE OCH FORANGARE-HYTT MED LUFTKONDITIONERING

KEY	PART NO.	PART NAME	QTY	SERIAL NO.	975	975HY	REMARKS
1	DA19972	HYDRAULIC HOSE	1		X	X	
2	DA19973	HYDRAULIC HOSE	1		X	X	
3	AH91003	KNOB	1		X	X	
4	AH80165	PUSH PULL CABLE	1		X	X	
5	AH80696	EVAPORATOR	1		X	X	
6	H82237	SCREEN	1		X	X	
7	AH88881	HOLDER	1		X	X	
8	CA20328	CLAMP	3		X	X	
9	H83025	LINE	2		X	X	
10	H85485	SHIELD	2		X	X	
11	CA22662	HOSE	1		X	X	
12	H82425	HOSE	1		X	X	
13	H82426	GROMMET	1		X	X	
14	AR21837	CLAMP	4		X	X	
15	AH80166	VALVE	1		X	X	
16	19H1919	CAP SCREW	3		X	X	1/4" X 5/8"
17	AH80167	HEATER	1		X	X	
18	37H32	SCREW	6		X	X	3/8"
19	37H14	SCREW	4		X	X	1/2"
20	AH80191	VALVE	1		X	X	
21	CA20325	CLAMP	3		X	X	
22	21M7081	SCREW	3		X	X	M8 X 15
23	12M7008	LOCK WASHER	3		X	X	8MM
24	14M7029	NUT	3		X	X	M8
25	H81669	WEATHERSTRIP	1		X	X	
26	AH80164	BRACKET	1		X	X	
27	CA22662	HOSE	2		X	X	(SUB FOR CA19971)

COPYRIGHT©1994 - 2008 DEERE & COMPANY Moline, Illinois All rights reserved

(3C22) HEATER PARTS-STANDARD CAB
ELEMENTS DU CHAUFFAGE-CABINE STANDARD
HEIZUNGSTEILE-STANDARD KABINE
PARTI DEL RISCALDAMENTO-CABINA STANDARD
ELEMENTOS DE CALEFACCION-CABINA STANDARD
VARMARENS DETALJER-STANDARD FORARHYTT

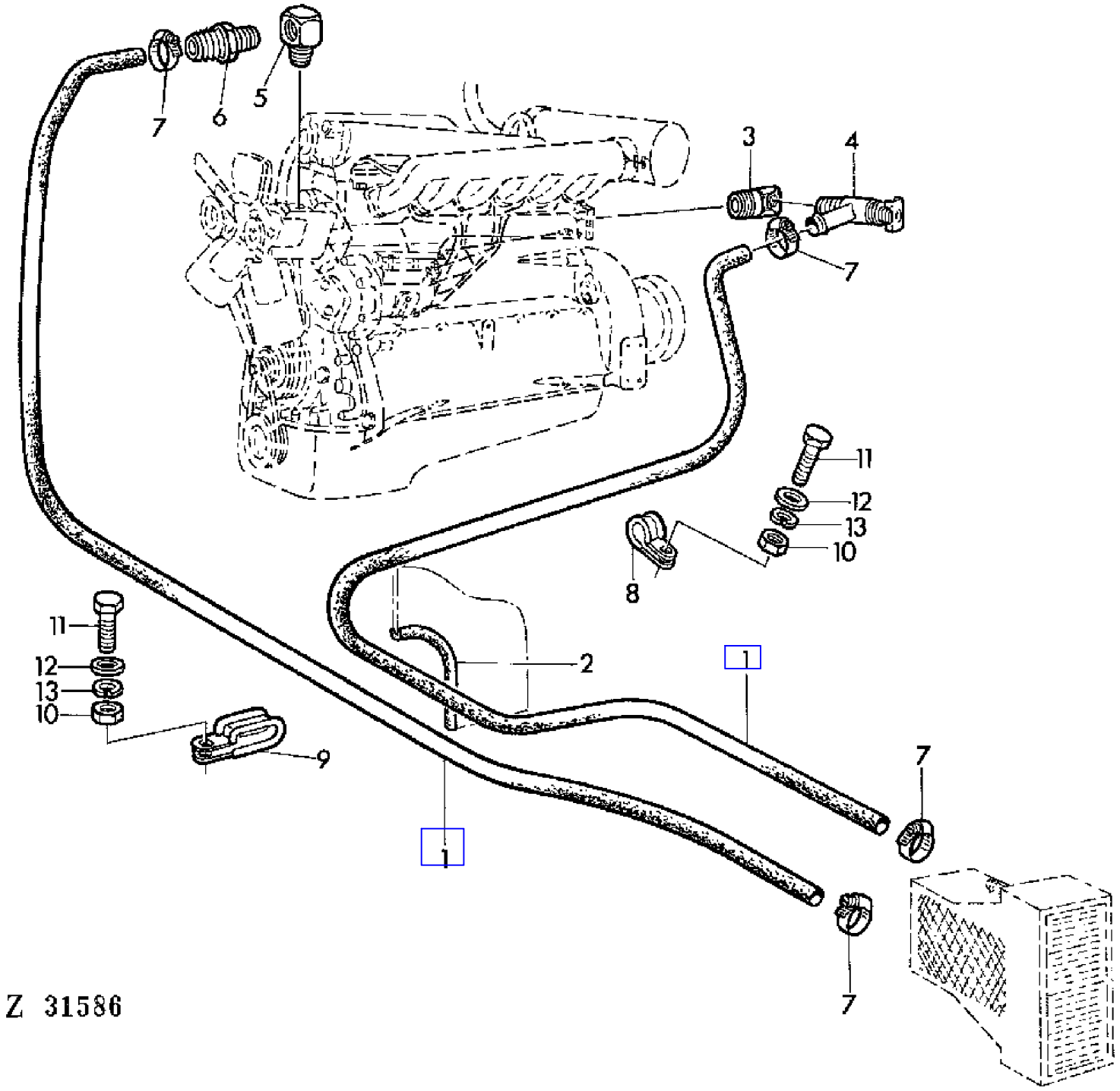

COPYRIGHT©1994 - 2008 DEERE & COMPANY Moline, Illinois All rights reserved

(3C22) HEATER PARTS-STANDARD CAB
ELEMENTS DU CHAUFFAGE-CABINE STANDARD
HEIZUNGSTEILE-STANDARD KABINE
PARTI DEL RISCALDAMENTO-CABINA STANDARD
ELEMENTOS DE CALEFACCION-CABINA STANDARD
VARMARENS DETALJER-STANDARD FORARHYTT

KEY	PART NO.	PART NAME	QTY	SERIAL NO.	975	975HY/4	REMARKS
1	VS907.05.02	HOSE	2		X	X	
2	Z34892	GUARD	1		X	X	(SUB FOR VS909.00.07)
3	T37027	FITTING	1		X	X	
4	AT35831	VALVE	1		X	X	
5	T37041	ELBOW FITTING	1		X	X	
6	H23196	FITTING	1		X	X	
7	VS905.01.42	CLAMP	4		X	X	
8	Z28191	CLAMP	2		X	X	
9	VS905.01.82	CLAMP	4		X	X	
10	14M7194	NUT	5		X	X	M6
11	19M7077	CAP SCREW	6		X	X	M6 X 20
12	24M7054	WASHER	6		X	X	6,4 MM
13	12M7012	LOCK WASHER	6		X	X	6 MM

COPYRIGHT©1994 - 2008 DEERE & COMPANY Moline, Illinois All rights reserved

(1I19) HOUSING-FINAL DRIVE
CARTER-COMMANDES FINALES
GEHAEUSE-ENDANTRIEB
CARTER-RIDUZIONE FINALE
CARCASA DE MANDO FINAL
SLUTDREVSHUS

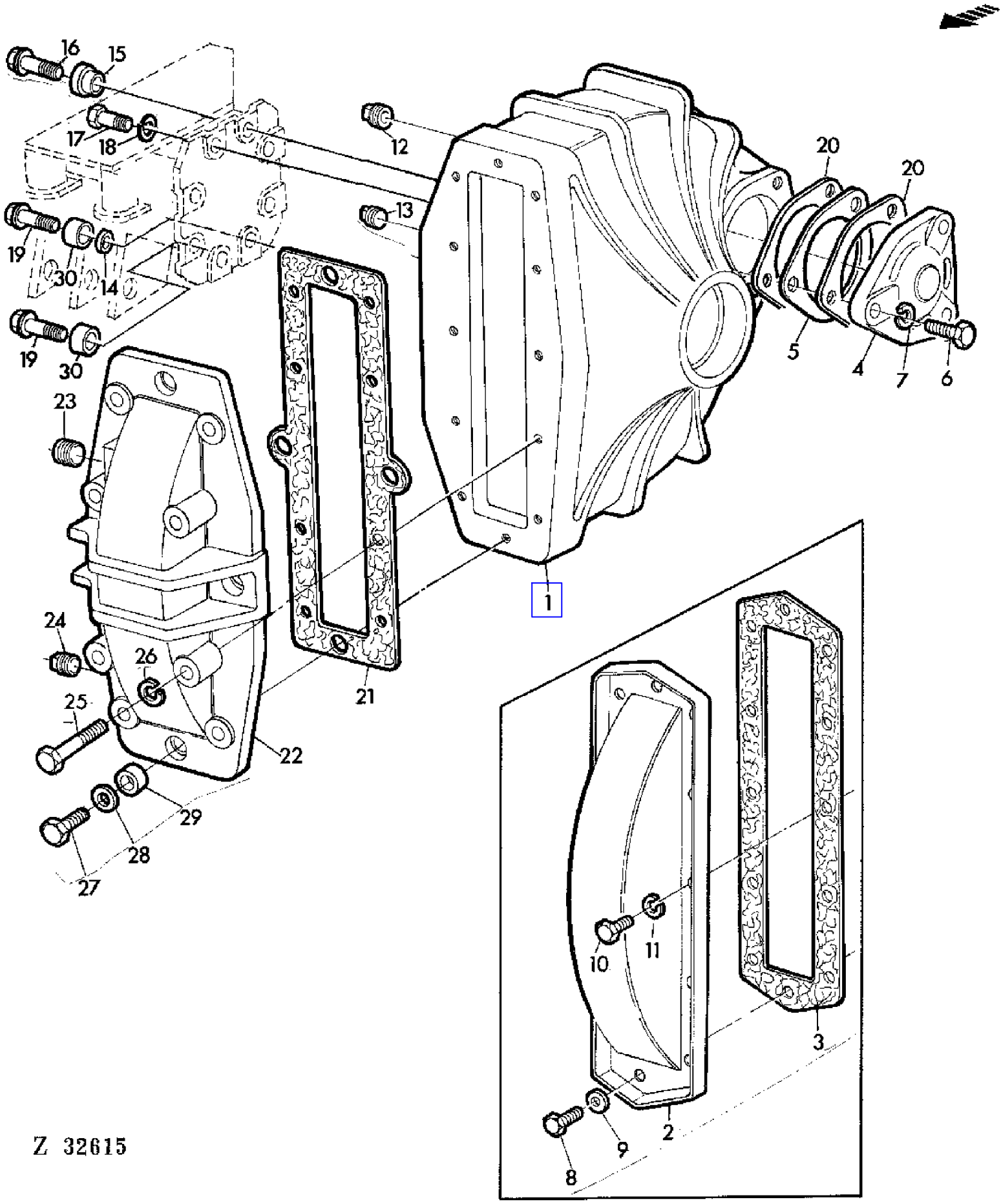

COPYRIGHT©1994 - 2008 DEERE & COMPANY Moline, Illinois All rights reserved

(1I19) HOUSING-FINAL DRIVE
CARTER-COMMANDES FINALES
GEHAEUSE-ENDANTRIEB
CARTER-RIDUZIONE FINALE
CARCASA DE MANDO FINAL
SLUTDREVSHUS

KEY	PART NO.	PART NAME	QTY	SERIAL NO.			975	975HY/4	REMARKS
1	Z11386	HOUSING	2		-	009171	X		(ORD AZ30974) (SUB FOR Z10945)
	Z11362	HOUSING	2	XXXX	-		X		
	Z11385	HOUSING	2	009172	-	010731	X		(SUB FOR Z11097)
	Z11014	HOUSING	2	010732	-	XXXX	X		(ORD JD8249, Z11362, Z40239)
2	P46363	COVER	2		-	009171	X		
3	Z44621	OIL LINE	2		-	009171	X		(SUB FOR P46362)
4	Z10941	QUILL	2				X		
5	Z34378	SHIM	AR				X		0,13 MM
	Z34377	SHIM	AR				X		0,25 MM
	Z34376	SHIM	AR				X		0,50 MM
6	19H1821	CAP SCREW	6				X		7/16" X 1-1/4"
7	H20551	LOCK WASHER	6				X		
8	H65076	CAP SCREW	AR		-	009171	X		5/16" X 5/8"
9	H30194	WASHER	AR		-	009171	X		
10	19H1813	CAP SCREW	AR				X		5/16" X5/8"
11	12H291	LOCK WASHER	AR				X		5/16"
12	P46369	FITTING	2		-	009171	X		1/2"
13	15H237	PIPE PLUG	2				X		1/2"
14	Z39561	BUSHING	2				X		
15	Z39355	BUSHING	2				X		(SUB FOR Z29008)
16	Z39677	CAP SCREW	2				X		3/4" X 2-1/4"
17	19H1374	CAP SCREW	6				X		3/4" X 2"
18	12H312	LOCK WASHER	AR				X		3/4"
19	Z39562	CAP SCREW	4				X		
20	Z34380	SHIM	2				X		0,08 MM
21	H22782	GASKET	2	009172	-		X		
22	H10280	COVER	2	009172	-		X		
23	H22789	PIPE PLUG	2	009172	-		X		
24	15H255	PIPE PLUG	2	009172	-		X		
25	19H2128	CAP SCREW	8	009172	-		X		3/8" X 3"
26	12H304	LOCK WASHER	8	009172	-		X		3/8"
27	19H1800	CAP SCREW	8	009172	-		X		3/8" X 1-1/2"
28	E12817	WASHER	8	009172	-		X		
29	H22785	BUSHING	8	009172	-		X		
30	Z39560	BUSHING	4				X		
..	AZ30974	KIT	1		-	009171	X		ASSY (INCL KEYS 21-29, Z11385)

COPYRIGHT©1994 - 2008 DEERE & COMPANY Moline, Illinois All rights reserved

(2D20) HYDRAULIC CONNECTIONS FOR HYDROSTATIC REEL DRIVE
RACCORDS POUR ENTRAINEMENT HYDROSTATIQUE DU RABATTEUR
ARMATUREN FUER HYDROST.HASPELANTRIEB
RACCORDI PER COMANDO IDROSTATICO DELL'ASPO
RACORES DE TUBERIAS PARA EL ACCION.HIDR.DEL MOLINETE
HYDRAULKOPPLINGGAR FOR HASPELDRIVNING

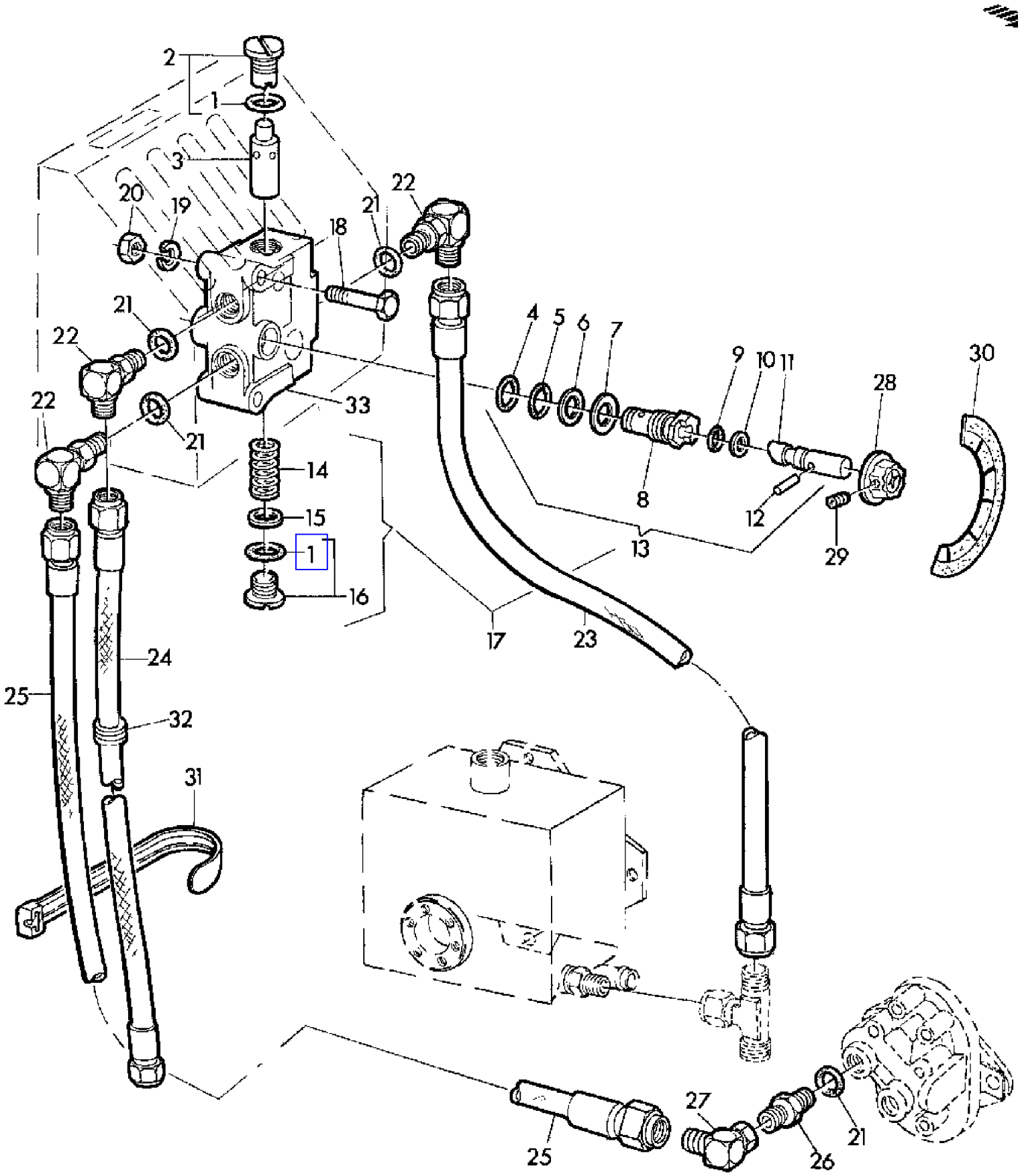

Z 31512

COPYRIGHT©1994 - 2008 DEERE & COMPANY Moline, Illinois All rights reserved

(2D20) HYDRAULIC CONNECTIONS FOR HYDROSTATIC REEL DRIVE
RACCORDS POUR ENTRAINEMENT HYDROSTATIQUE DU RABATTEUR
ARMATUREN FUER HYDROST.HASPELANTRIEB
RACCORDI PER COMANDO IDROSTATICO DELL'ASPO
RACORES DE TUBERIAS PARA EL ACCION.HIDR.DEL MOLINETE
HYDRAULKOPPLINGGAR FOR HASPELDRIVNING

KEY	PART NO.	PART NAME	QTY	SERIAL NO.	975	975HY/4	REMARKS
1	H63289	O-RING	AR		X	X	NSEP (ORD AH81167) (SUB FOR P47889)
2	AH81165	PLUG	1		X	X	W/ KEY 1
3	.....	RELIEF VALVE	1		X	X	NSEP (ORD AH122371)
4	R28776	O-RING	AR		X	X	NSEP (ORD AH81167)
5	R375R	O-RING	AR		X	X	NSEP (ORD AH81167)
6	H63357	BACK-UP RING	1		X	X	NSEP (ORD AH81167)
7	H80404	SHIM	AR		X	X	
8	.....	SLEEVE	1		X	X	NSEP (ORD AH122354)
9	P51212	O-RING	AR		X	X	NSEP (ORD AH81167) (SUB FOR R10093)
10	T27624	BACK-UP RING	1		X	X	NSEP (ORD AH81167) (SUB FOR H61397)
11	.....	SPOOL VALVE	1		X	X	NSEP (ORD AH122354)
12	H101370	GROOVE PIN	1		X	X	(SUB FOR H80403)
13	AH122354	KIT	1		X	X	KIT, INCL KEYS 4-12 (SUB FOR AH81166)
14	.....	SPRING	1		X	X	NSEP (ORD AH122371)
15	.....	WASHER	1		X	X	NSEP (ORD AH122371)
16	AH78760	DRAIN PLUG	1		X	X	W/ KEY 1
17	AH122371	CHECK VALVE	1		X	X	ASSY, INCL KEYS 1-16,33 (SUB FOR AH81164)
18	19M7185	CAP SCREW	2		X	X	M8 X 60
19	12M7008	LOCK WASHER	2		X	X	8 MM
20	14M7029	NUT	2		X	X	M8
21	R26906	O-RING	AR		X	X	
22	AR26724	ELBOW FITTING	3		X	X	
23	AZ25026	HYDRAULIC HOSE	1		X	X	
24	AZ25024	HYDRAULIC HOSE	1		X	X	
25	AZ35342	HYDRAULIC HOSE	1		X	X	(SUB FOR AZ25025, AZ25460)
26	R27270	FITTING	1		X	X	
27	AH77612	ELBOW FITTING	1		X	X	
28	AH76955	KNOB	1		X	X	
29	22H922	SET SCREW	1		X	X	
30	H78701	DECAL	1		X	X	
31	Z34568	CLAMP	5		X	X	
32	Z36557	GROMMET	3		X	X	
33	.....	CONTROL VALVE	1		X	X	NSEP (ORD AH122371)
..	AH81167	SEAL KIT	1		X	X	KIT, INCL KEYS 1,4-6,9,10

COPYRIGHT©1994 - 2008 DEERE & COMPANY Moline, Illinois All rights reserved

(4G12) HYDRAULIC CYLINDER SUPPORTS
ANCRAGE DES VERINS
GEGENLAGER HYDRAULIKZYLINDER,ABSTUETZUNG
SUPPORTI CILINDRO IDRAULICO
SOPORTES DE APOYO DE LOS CILINDROS HIDRAULICOS
KONSOLER FOR HYDRAULCYLINDER

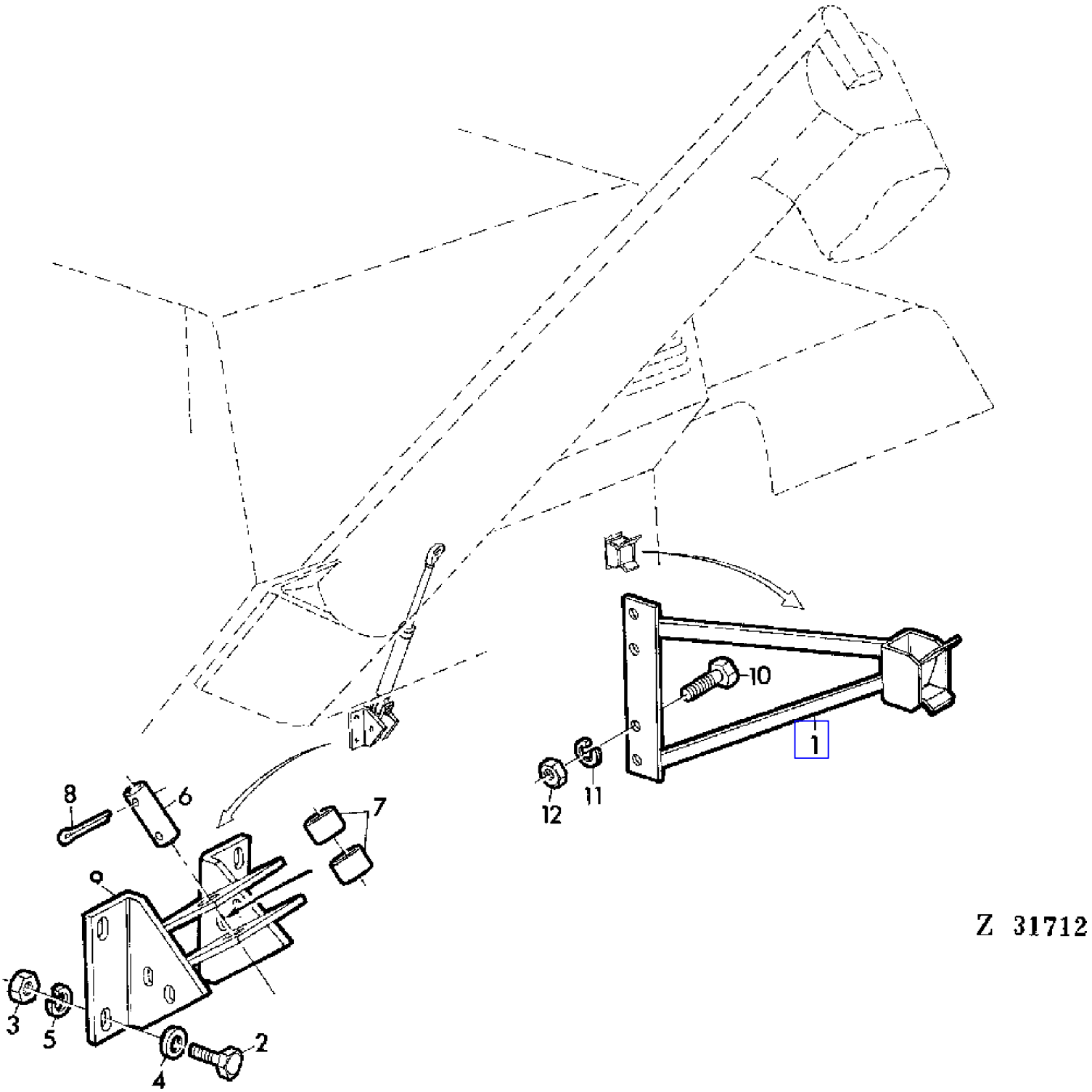

COPYRIGHT©1994 - 2008 DEERE & COMPANY Moline, Illinois All rights reserved

(4G12) HYDRAULIC CYLINDER SUPPORTS
ANCRAGE DES VERINS
GEGENLAGER HYDRAULIKZYLINDER,ABSTUETZUNG
SUPPORTI CILINDRO IDRAULICO
SOPORTES DE APOYO DE LOS CILINDROS HIDRAULICOS
KONSOLER FOR HYDRAULCYLINDER

KEY	PART NO.	PART NAME	QTY	SERIAL NO.		975	975HY/4	REMARKS
1	AZ23820	SUPPORT	1		- 009741	X		(ORD AZ25492 W/ Z36590)
	AZ25492	SUPPORT	1	009742	-	X	X	(SUB FOR AZ23820)
2	19M7166	CAP SCREW	AR			X	X	M10 X 20
3	AZ22706	HOLDER	1			X	X	
4	24M7040	WASHER	AR			X	X	11 MM
5	12M7013	LOCK WASHER	AR			X	X	10 MM
6	44M7029	PIN	1			X	X	25 X 90 X 74 MM
7	Z33538	SPACER	2			X	X	
8	11M7037	COTTER PIN	AR			X	X	6,3 X 40 MM
9	AZ22706	HOLDER	1			X	X	
10	19M7139	CAP SCREW	AR			X	X	M8 X 20
11	12M7008	LOCK WASHER	AR			X	X	8 MM
12	14M7029	NUT	AR			X	X	M8

COPYRIGHT©1994 - 2008 DEERE & COMPANY Moline, Illinois All rights reserved

(2D22) HYDRAULIC HOSES FOR HYDROSTATIC REEL DRIVE
FLEXIBLES HYDRAULIQUES POUR ENTRAINEMENT DU RABATTEUR
HYDRAULIKSCHLAEUCHE FUER HYDROST.HASPELANTRIEB
FLESSIBILI IDRAULICI PER COMANDO ASPO
MANGUERAS PARA EL ACCIONAMIENTO HIDR.DEL MOLINETE
HYDRAULSANGAR FOR HASPELDRIVNING

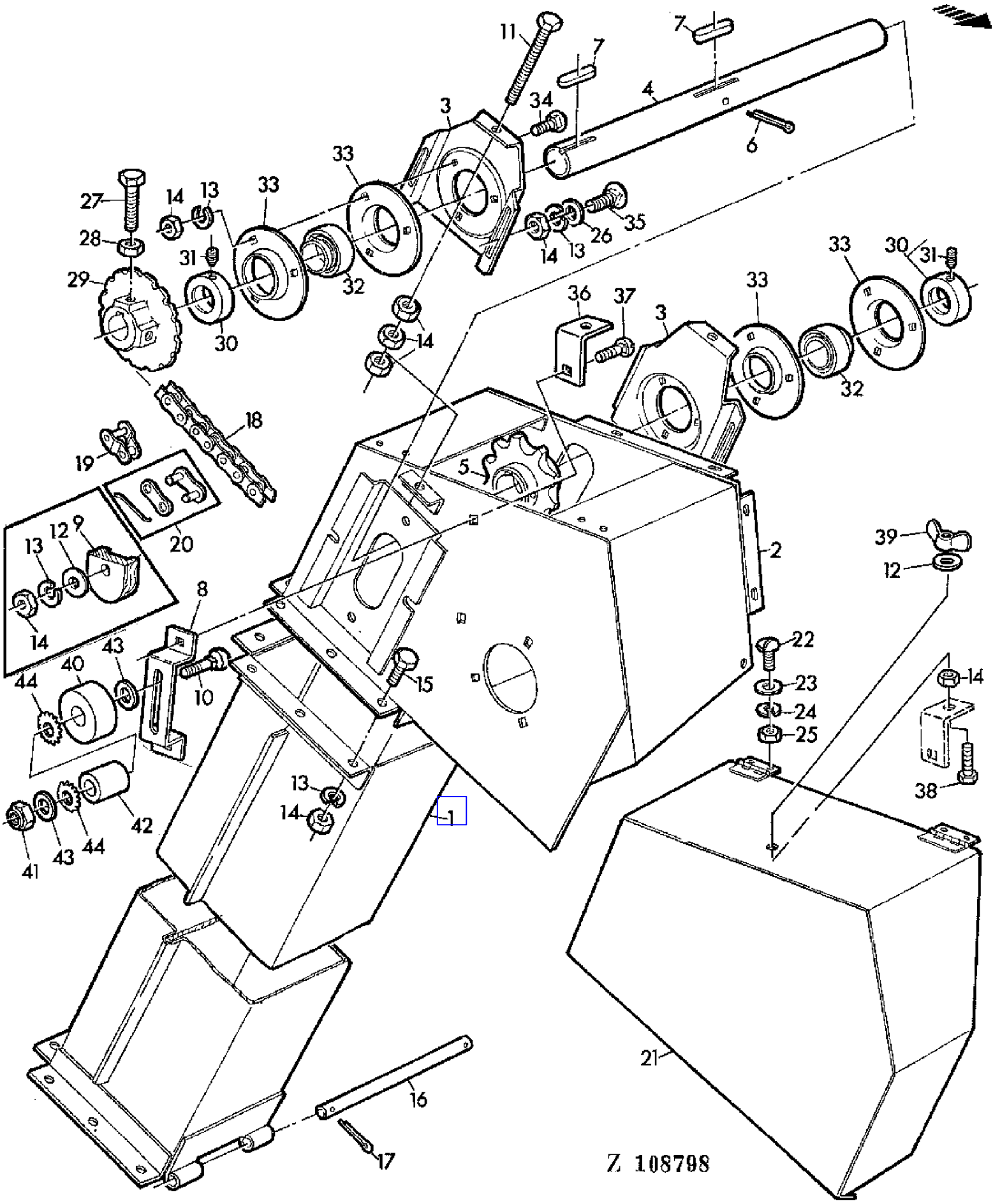

COPYRIGHT©1994 - 2008 DEERE & COMPANY Moline, Illinois All rights reserved

(2D22) HYDRAULIC HOSES FOR HYDROSTATIC REEL DRIVE
FLEXIBLES HYDRAULIQUES POUR ENTRAINEMENT DU RABATTEUR
HYDRAULIKSCHLAEUCHE FUER HYDROST.HASPELANTRIEB
FLESSIBILI IDRAULICI PER COMANDO ASPO
MANGUERAS PARA EL ACCIONAMIENTO HIDR.DEL MOLINETE
HYDRAULSANGAR FOR HASPELDRIVNING

KEY	PART NO.	PART NAME	QTY	SERIAL NO.	975	975HY/4	REMARKS
1	AZ24580	TEE FITTING	1		X	X	(SUB FOR AZ25032)
2	AZ25023	HYDRAULIC HOSE	1		X	X	
3	Z26822	CLAMP	2		X	X	
4	Z46100	HOSE	1		X	X	(SUB FOR Z28156)
5	Z28154	PIPE	1		X	X	
6	Z32993	SLEEVE FITTING	1		X	X	
7	Z32973	TUBE NUT	1		X	X	
8	Z28155	PIPE PLUG	1		X	X	
9	T45644	FITTING	2		X	X	
10	R26375	O-RING	4		X	X	
11	AH75167	HYD. QUICK-CONNECT COUPLER	2		X	X	
12	AR94522	INTERNAL HALF COUPLER	2		X	X	(SUB FOR AH15000)
13	AZ26930	HYDRAULIC HOSE	2		X	X	INCL KEY 14
14	R34063	FITTING	2		X	X	
15	R21722	O-RING	1		X	X	

COPYRIGHT©1994 - 2008 DEERE & COMPANY Moline, Illinois All rights reserved

(2D04) HYDRAULIC LINES (BRAKE SYSTEM)
CANALISATIONS HYDRAULIQUES (SYSTEME DE FREINAGE)
HYDRAULIKLEITUNGEN (BREMSSYSTEM)
TUBAZIONI IDRAULICHE (SISTEMA DI FRENI)
TUBERIAS HIDRAULICAS (SISTEMA DE FRENO)
HYDRAULLEDNINGAR (BROMSSYSTEM)

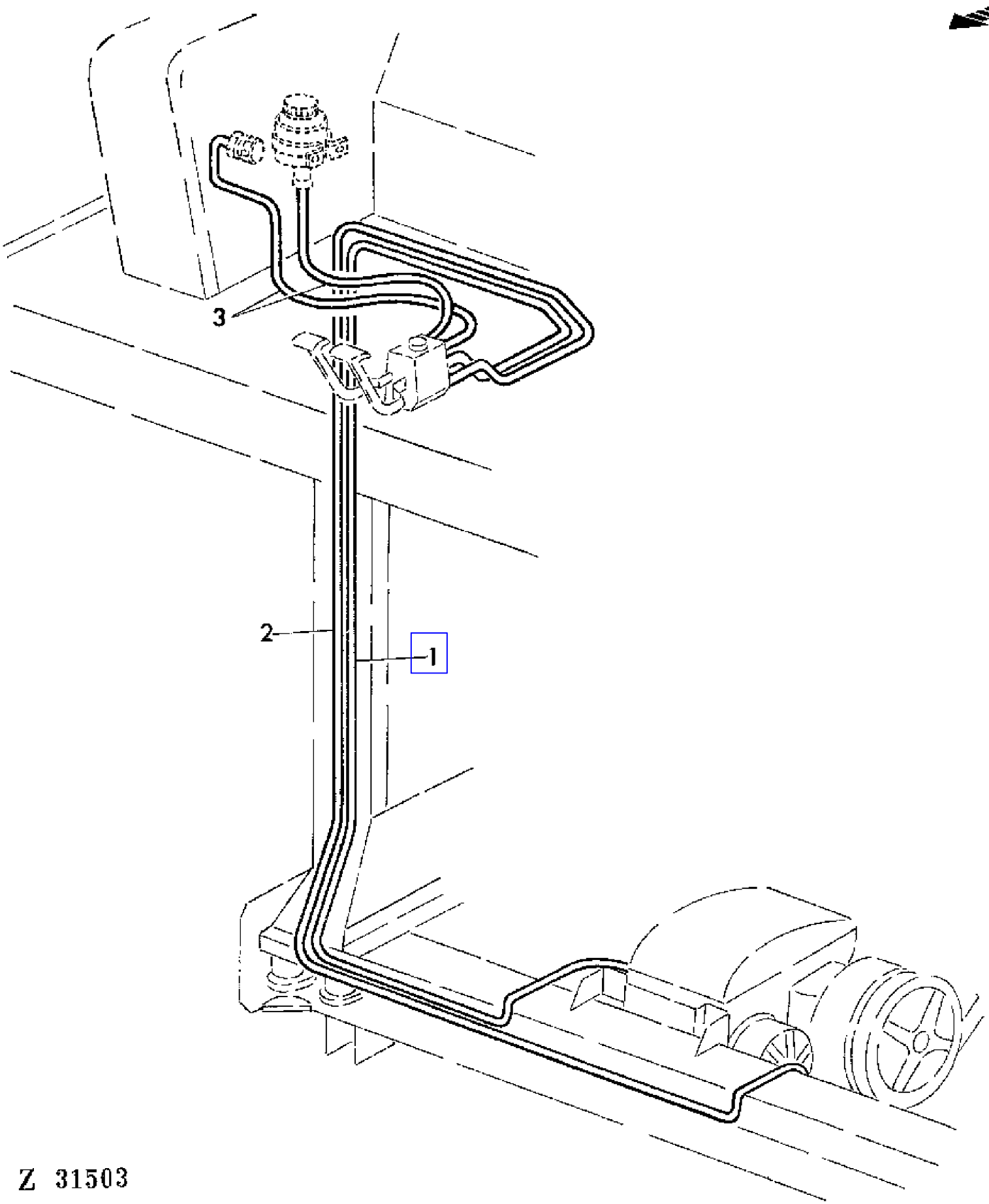

COPYRIGHT©1994 - 2008 DEERE & COMPANY Moline, Illinois All rights reserved

(2D04) HYDRAULIC LINES (BRAKE SYSTEM)
CANALISATIONS HYDRAULIQUES (SYSTEME DE FREINAGE)
HYDRAULIKLEITUNGEN (BREMSSYSTEM)
TUBAZIONI IDRAULICHE (SISTEMA DI FRENI)
TUBERIAS HIDRAULICAS (SISTEMA DE FRENO)
HYDRAULLEDNINGAR (BROMSSYSTEM)

KEY	PART NO.	PART NAME	QTY	SERIAL NO.	975	975HY/4	REMARKS
1	AZ33236	OIL LINE	1		X	X	
2	AZ23931	OIL LINE	1		X	X	
3	Z34641	HOSE	AR			X	

COPYRIGHT©1994 - 2008 DEERE & COMPANY Moline, Illinois All rights reserved

(2C24) HYDRAULIC LINES (REEL ADJUSTMENT)
CANALISATIONS HYDRAULIQUES (REGLAGE DU RABATTEUR)
HYDRAULIKLEITUNGEN (HASPELVERSTELLUNG)
TUBAZIONI IDRAULICHE (REGOLAZIONE DELL'ASPO)
TUBERIAS HIDRAULICAS (AJUSTE DEL MOLINETE)
HYDRAULLEDNINGAR (HASPELINSTALLING)

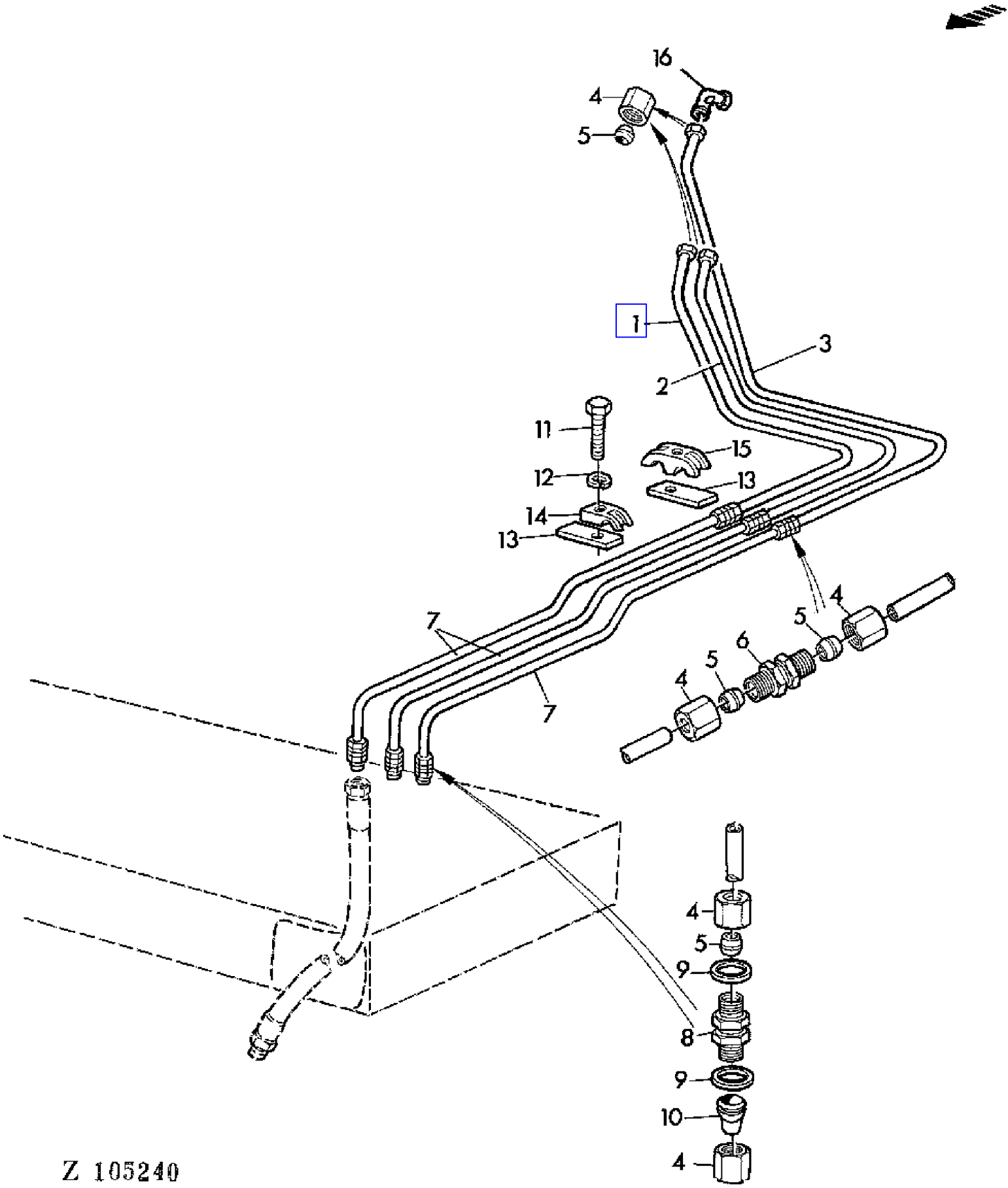

COPYRIGHT©1994 - 2008 DEERE & COMPANY Moline, Illinois All rights reserved

(2C24) HYDRAULIC LINES (REEL ADJUSTMENT)
CANALISATIONS HYDRAULIQUES (REGLAGE DU RABATTEUR)
HYDRAULIKLEITUNGEN (HASPELVERSTELLUNG)
TUBAZIONI IDRAULICHE (REGOLAZIONE DELL'ASPO)
TUBERIAS HIDRAULICAS (AJUSTE DEL MOLINETE)
HYDRAULLEDNINGAR (HASPELINSTALLING)

KEY	PART NO.	PART NAME	QTY	SERIAL NO.	975	975HY/4	REMARKS
1	AZ23971	OIL LINE	1		X	X	ASSY, INCL KEYS 4,5
2	AZ23972	OIL LINE	1		X	X	ASSY, INCL KEYS 4,5
3	AZ23973	OIL LINE	1		X	X	ASSY, INCL KEYS 4,5
4	Z32976	TUBE NUT	12		X	X	
5	Z32996	SLEEVE FITTING	12		X	X	
6	Z32962	FITTING	3		X	X	
7	AZ23970	OIL LINE	3		X	X	ASSY, INCL KEYS 4,5
8	Z32977	UNION FITTING	3		X	X	
9	24M7038	WASHER	2		X	X	14 MM
10	Z32998	SLEEVE FITTING	2		X	X	
11	19M7177	CAP SCREW	3		X	X	M6 X 35
12	12M7012	LOCK WASHER	3		X	X	6 MM
13	Z30667	PLATE	4		X	X	
14	Z34951	CLAMP	2		X	X	
15	Z34954	CLAMP	2		X	X	
16	AZ21973	ELBOW FITTING	1		X	X	

COPYRIGHT©1994 - 2008 DEERE & COMPANY Moline, Illinois All rights reserved

(2C20) HYDRAULIC LINES (RESERVOIR,PUMP,CONTROL VALVE)
CANALISATIONS (RESERVOIR-POMPE-DISTRIBUTEUR)
LEITUNGEN (OELTANK-PUMPE-STEUERGERAET)
TUBAZIONI (SERBATOIO-POMPA-DISTRIBUTORE)
TUBERIAS (DEPOSITO DE ACEITE-BOMBA-VALVULA DE MANDO)
LEDNINGGAR (OLJETANK-PUMP-MANOVERVENTIL)

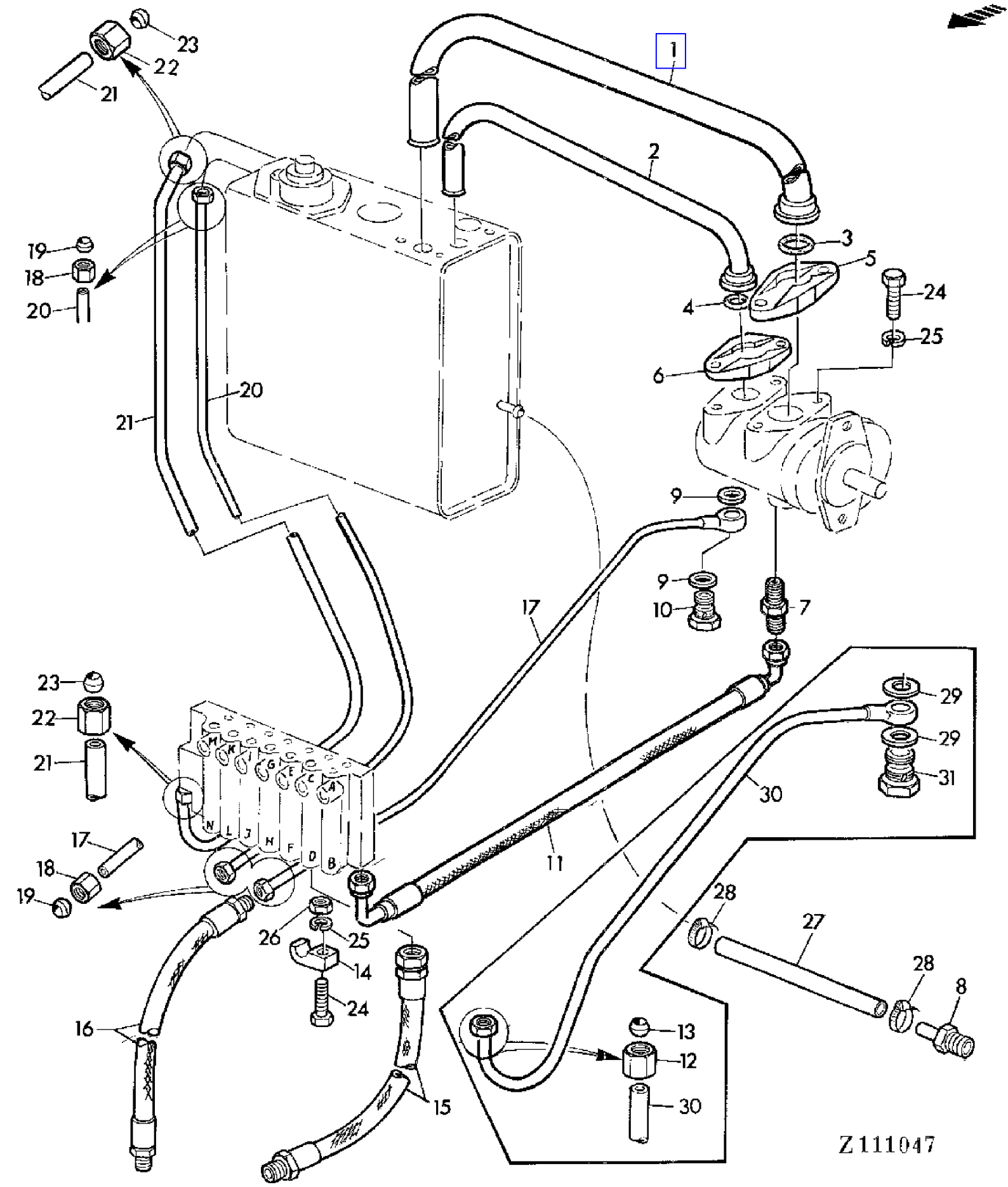

COPYRIGHT©1994 - 2008 DEERE & COMPANY Moline, Illinois All rights reserved

(2C20) HYDRAULIC LINES (RESERVOIR,PUMP,CONTROL VALVE)
CANALISATIONS (RESERVOIR-POMPE-DISTRIBUTEUR)
LEITUNGEN (OELTANK-PUMPE-STEUERGERAET)
TUBAZIONI (SERBATOIO-POMPA-DISTRIBUTORE)
TUBERIAS (DEPOSITO DE ACEITE-BOMBA-VALVULA DE MANDO)
LEDNINGGAR (OLJETANK-PUMP-MANOVERVENTIL)

KEY	PART NO.	PART NAME	QTY	SERIAL NO.	975	975HY/4	REMARKS
1	AZ25211	OIL LINE	1		X	X	(SUB FOR AZ23886)
2	AZ25212	OIL LINE	1		X	X	(SUB FOR AZ23883)
3	A4730R	O-RING	1		X	X	
4	B2762R	O-RING	1		X	X	
5	Z11033	FLANGE	1		X	X	
6	Z11032	FLANGE	1		X	X	
7	Z35625	FITTING	1		X	X	
8	Z34065	FITTING	1		X	X	
9	51M4236	RING	2		X	X	14MM
10	38M7008	FITTING	1		X	X	
11	AZ36726	HYDRAULIC HOSE	1		X	X	(SUB FOR AZ23892)
12	Z33010	TUBE NUT	1		X	X	
13	Z33009	SLEEVE FITTING	1		X	X	
14	Z34861	CLAMP	2		X	X	
15	AZ23702	HYDRAULIC HOSE	1		X	X	
16	AZ23701	HYDRAULIC HOSE	2		X	X	
17	AZ23893	OIL LINE	1		X	X	ASSY, INCL KEYS 18,19
18	Z32974	TUBE NUT	3		X	X	
19	Z32995	SLEEVE FITTING	3		X	X	
20	AZ23894	OIL LINE	1		X	X	ASSY, INCL KEYS 18,19
21	AZ23895	OIL LINE	1		X	X	ASSY, INCL KEYS 22,23
22	Z32972	TUBE NUT	2		X	X	
23	Z32992	SLEEVE FITTING	2		X	X	
24	19M7374	CAP SCREW	AR		X	X	M6 X 40
25	12M7012	LOCK WASHER	AR		X	X	6 MM
26	14M7027	NUT	2		X	X	M6
27	Z34069	HOSE	1		X	X	
28	Z34829	CLAMP	2		X	X	
29	51M4240	RING	2		X	X	18 MM
30	AZ23892	OIL LINE	1		X	X	SUB (ORD AZ36726, Z35625)
31	38M7007	FITTING	1		X	X	

COPYRIGHT©1994 - 2008 DEERE & COMPANY Moline, Illinois All rights reserved

(2D06) HYDRAULIC LINES (STEERING)
CANALISATIONS HYDRAULIQUES (DIRECTION)
HYDRAULIKLEITUNGEN (LENKUNG)
TUBAZIONI IDRAULICHE (STERZO)
TUBERIAS HIDRAULICAS (DIRECCION)
HYDRAULLEDNINGAR (STYRNING)

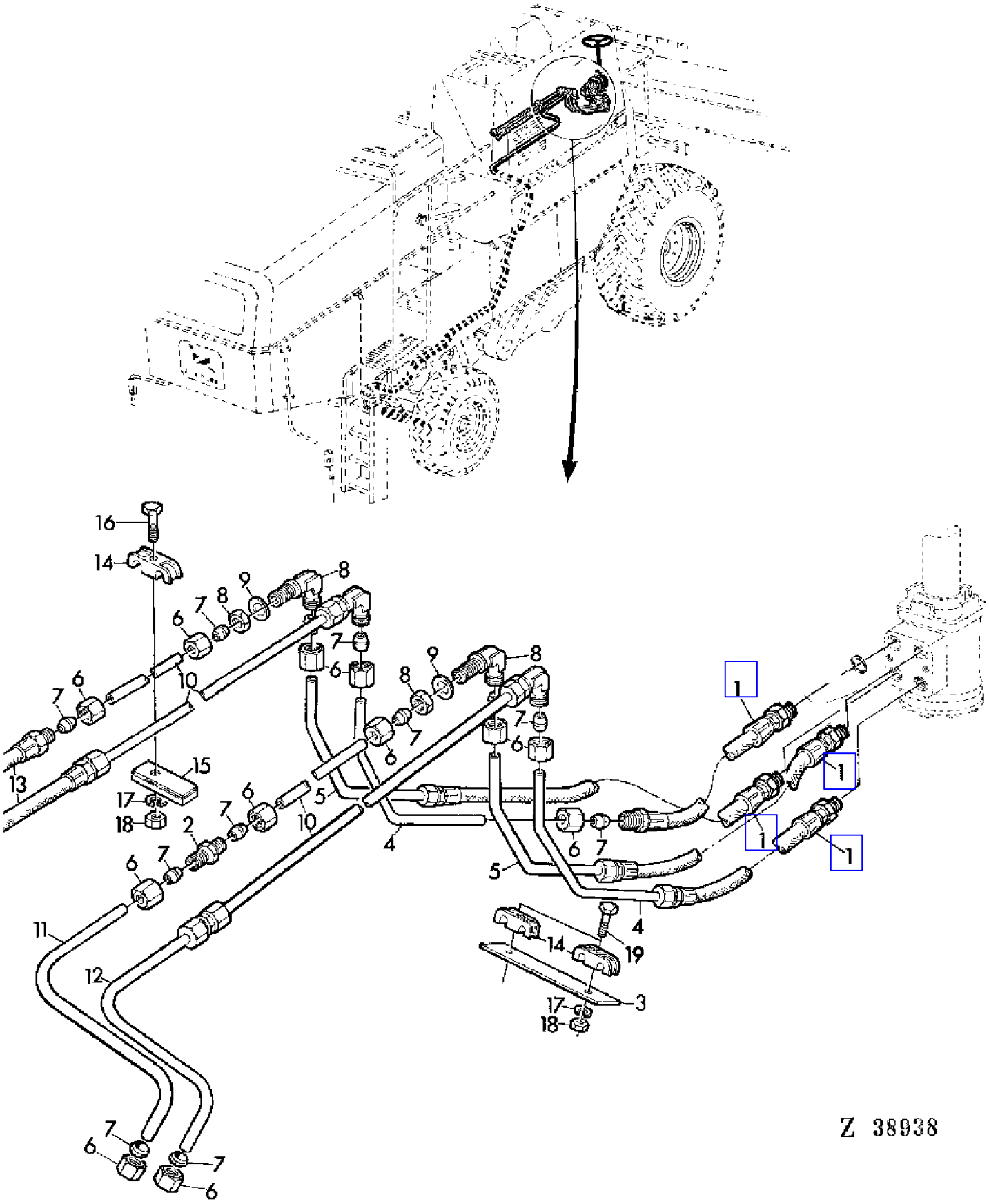

COPYRIGHT©1994 - 2008 DEERE & COMPANY Moline, Illinois All rights reserved

(2D06) HYDRAULIC LINES (STEERING)
CANALISATIONS HYDRAULIQUES (DIRECTION)
HYDRAULIKLEITUNGEN (LENKUNG)
TUBAZIONI IDRAULICHE (STERZO)
TUBERIAS HIDRAULICAS (DIRECCION)
HYDRAULLEDNINGAR (STYRNING)

KEY	PART NO.	PART NAME	QTY	SERIAL NO.	975	975HY/4	REMARKS
1	AZ31463	HYDRAULIC HOSE	4		X	X	(SUB FOR AZ16228, AZ29328)
2	Z32960	COUPLING	AR		X	X	
3	Z34958	STRAP	AR		X	X	
4	AZ23963	OIL LINE	2		X	X	
5	AZ23964	OIL LINE	2		X	X	
6	Z32974	TUBE NUT	16		X	X	
7	Z32995	SLEEVE FITTING	18		X	X	
8	Z34066	ELBOW FITTING	4		X	X	
9	24M7048	WASHER	4		X	X	16 MM
10	AZ23962	OIL LINE	1		X	X	ASSY, INCL KEYS 6,7
11	AZ23952	OIL LINE	1		X	X	ASSY, INCL KEYS 6,7
12	AZ23951	OIL LINE	1		X	X	ASSY, INCL KEYS 6,7
13	AZ23701	HYDRAULIC HOSE	2		X	X	
14	Z34955	CLAMP	4		X	X	
15	Z30667	PLATE	4		X	X	
16	19M7177	CAP SCREW	AR		X	X	M6 X 35
17	12M7012	LOCK WASHER	AR		X	X	6 MM
18	14M7027	NUT	AR		X	X	M6
19	19M7286	CAP SCREW	AR		X	X	M6 X 25

COPYRIGHT©1994 - 2008 DEERE & COMPANY Moline, Illinois All rights reserved

(2D08) HYDRAULIC LINES (STEERING)
CANALISATIONS HYDRAULIQUES (DIRECTION)
HYDRAULIKLEITUNGEN (LENKUNG)
TUBAZIONI IDRAULICHE (STERZO)
TUBERIAS-HIDRAULICAS (DIRECCION)
HYDRAULLEDNINGAR (STYRNING)

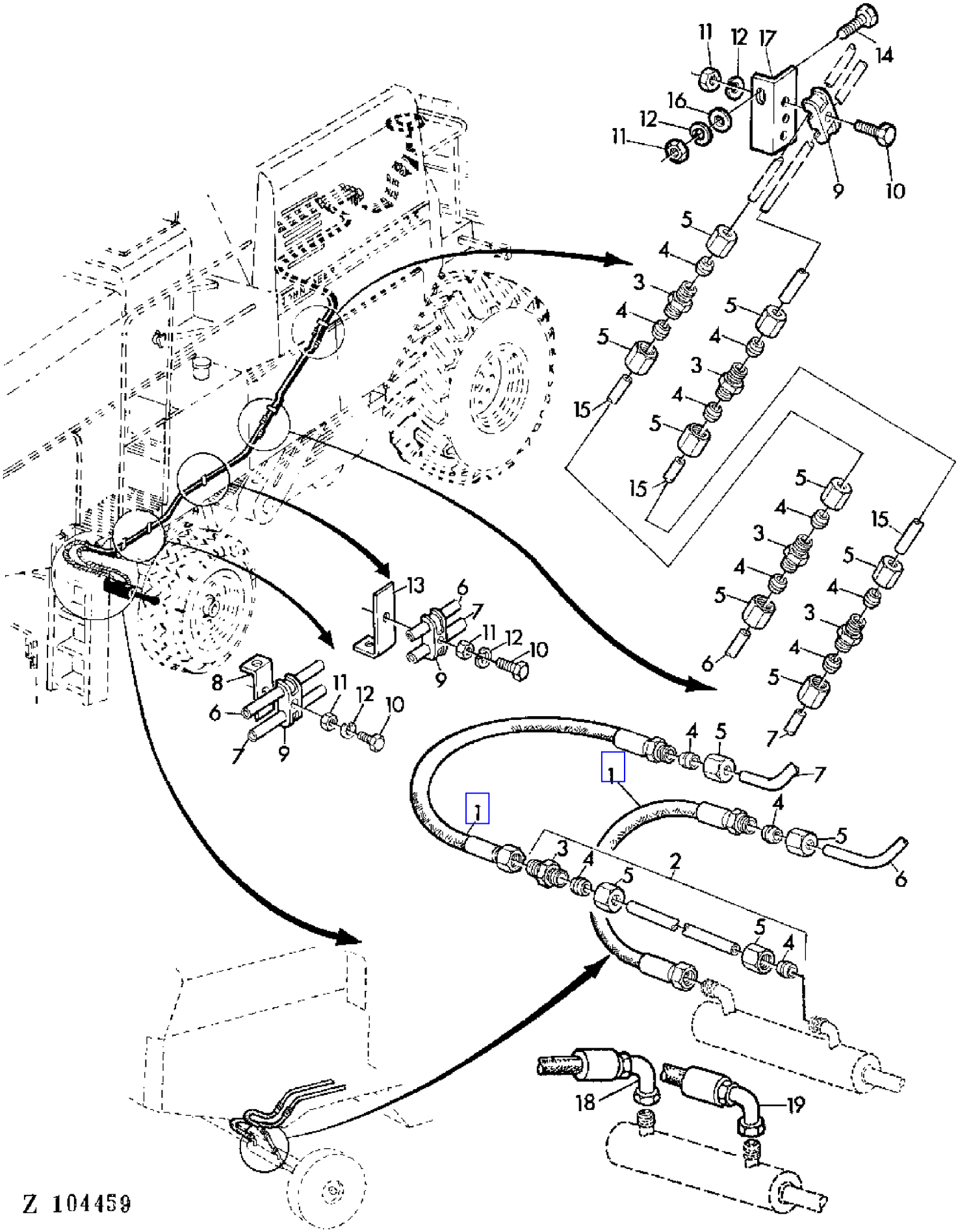

COPYRIGHT©1994 - 2008 DEERE & COMPANY Moline, Illinois All rights reserved

(2D08) HYDRAULIC LINES (STEERING)
CANALISATIONS HYDRAULIQUES (DIRECTION)
HYDRAULIKLEITUNGEN (LENKUNG)
TUBAZIONI IDRAULICHE (STERZO)
TUBERIAS-HIDRAULICAS (DIRECCION)
HYDRAULLEDNINGAR (STYRNING)

KEY	PART NO.	PART NAME	QTY	SERIAL NO.		975	975HY/4	REMARKS
1	AZ16228	HYDRAULIC HOSE	2		- 023197	X	X	
2	AZ22176	OIL LINE	2		- 023197	X	X	(A) INCL KEYS 3-5
3	Z32960	COUPLING	6			X	X	
4	Z32995	SLEEVE FITTING	10			X	X	
5	Z32974	TUBE NUT	10			X	X	
6	AZ23965	OIL LINE	1			X	X	ASSY
7	AZ23966	OIL LINE	1			X	X	ASSY
8	Z32683	ANGLE	2			X	X	
9	Z34955	CLAMP	4			X	X	
10	19M7286	CAP SCREW	4			X	X	M6 X 25
11	14M7027	NUT	AR			X	X	M6
12	12M7012	LOCK WASHER	AR			X	X	6 MM
13	Z27437	ANGLE	4			X	X	
14	19M7077	CAP SCREW	AR			X	X	M6 X 20
15	AZ23967	OIL LINE	2			X	X	ASSY
16	24M7088	WASHER	AR			X	X	6,6 MM
17	Z44181	ANGLE	AR			X	X	(SUB FOR Z27447)
18	AZ25674	HYDRAULIC HOSE	1	023198	-	X	X	
19	AZ25675	HYDRAULIC HOSE	1	023198	-	X	X	

(A) FOR RICE ATTACHEMENT
POUR EQUIPEMENT RIZ
FUER REISAUSRUESTUNG
PER ATTREZZATURE DA RISO
PARA EQUIPO DE ARROZ
FOR RISTILLBEHOR

COPYRIGHT©1994 - 2008 DEERE & COMPANY Moline, Illinois All rights reserved

(2D12) HYDRAULIC LINES (UNLOADING TUBE)
CANALISATIONS HYDRAULIQUES/TUYAU DE DECHARGE
HYDRAULIKLEITUNGEN/ENTLEEROHR
TUBAZIONI IDRAULICHE (TUBO DI SCARICO)
TUBERIAS HIDRAULICAS/TUBO DE DESCARGA
HYDRAULLEDNINGAR (AVLASTNINGSROR)

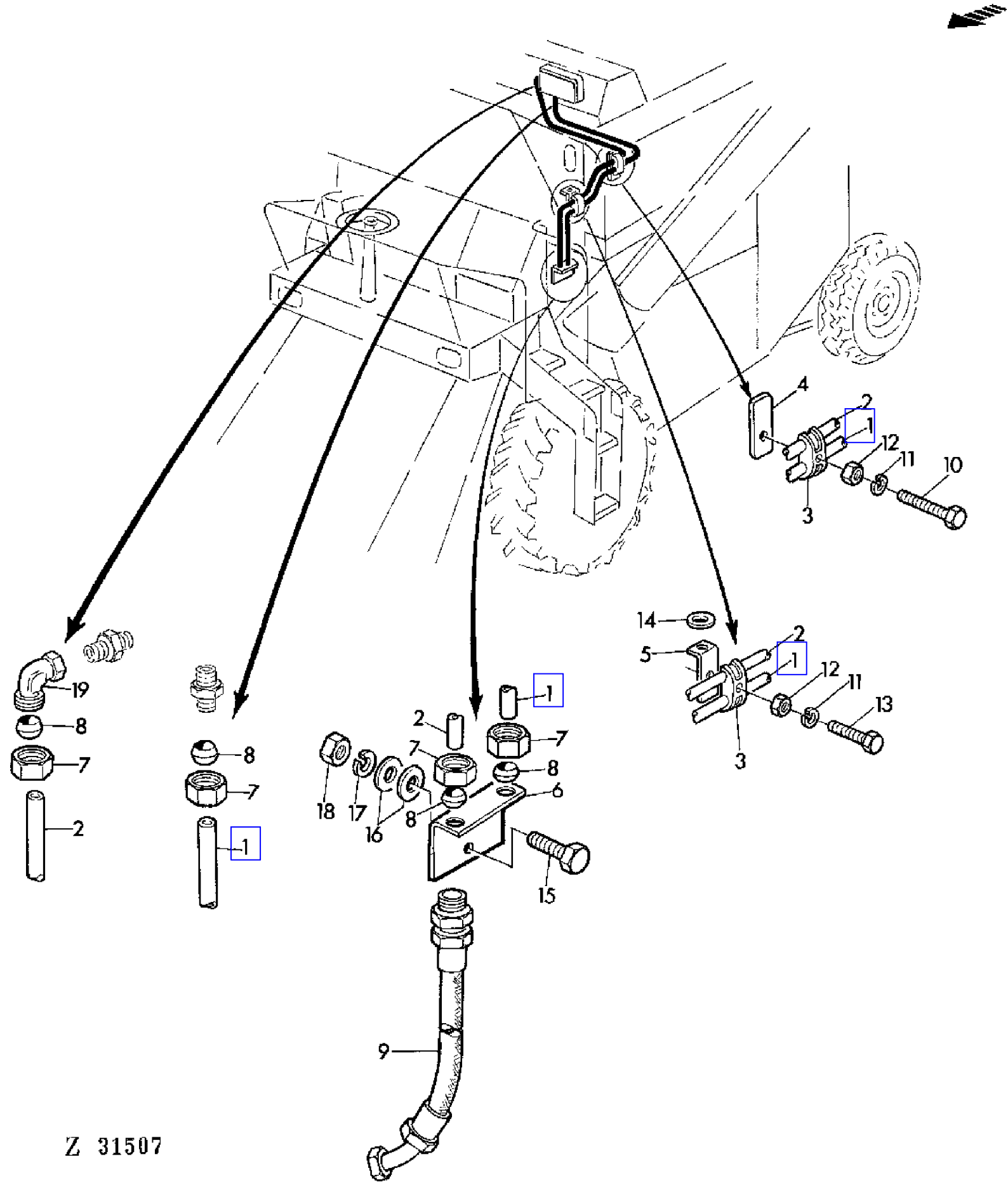

COPYRIGHT©1994 - 2008 DEERE & COMPANY Moline, Illinois All rights reserved

(2D12) HYDRAULIC LINES (UNLOADING TUBE)
CANALISATIONS HYDRAULIQUES/TUYAU DE DECHARGE
HYDRAULIKLEITUNGEN/ENTLEEROHR
TUBAZIONI IDRAULICHE (TUBO DI SCARICO)
TUBERIAS HIDRAULICAS/TUBO DE DESCARGA
HYDRAULLEDNINGAR (AVLASTNINGSROR)

KEY	PART NO.	PART NAME	QTY	SERIAL NO.	975	975HY/4	REMARKS
1	AZ23974	OIL LINE	1		X	X	ASSY, INCL KEYS 7,8
2	AZ23975	OIL LINE	1		X	X	ASSY, INCL KEYS 7,8
3	Z34953	CLAMP	2		X	X	
4	Z30667	PLATE	1		X	X	
5	Z32683	ANGLE	1		X	X	
6	Z34956	RETAINER	1		X	X	
7	Z32975	TUBE NUT	4		X	X	
8	Z32997	SLEEVE FITTING	4		X	X	
9	AZ26172	HYDRAULIC HOSE	2		X	X	(SUB FOR AZ22898, AZ30774)
10	19M7177	CAP SCREW	1		X	X	M6 X 35
11	12M7012	LOCK WASHER	2		X	X	6 MM
12	14M7027	NUT	2		X	X	M6
13	19M7077	CAP SCREW	1		X	X	M6 X 20
14	24M7036	WASHER	1		X	X	9 MM
15	19M7380	CAP SCREW	1		X	X	M10 X 22
16	24M7028	WASHER	2		X	X	10,5 MM
17	12M7013	LOCK WASHER	1		X	X	10 MM
18	14M7140	NUT	1		X	X	M10 |
19	AZ21972	ELBOW FITTING	1		X	X	

COPYRIGHT©1994 - 2008 DEERE & COMPANY Moline, Illinois All rights reserved

(2D14) HYDRAULIC LINES FOR DUAL LIGHT CYLINDERS
CANALISATIONS POUR VERINS DE LEVAGE DOUBLES
LEITUNGEN MIT DOPPELHUBZYLINDER
TUBAZIONI PER CILINDRI DI SOLLEVAMENTO DOPPI
TUBERIAS Y CILINDROS DE ELEVACION GEMELOS
HYDRAULLEDNINGAR FOR DUBBELLYFTCYLINDRAR

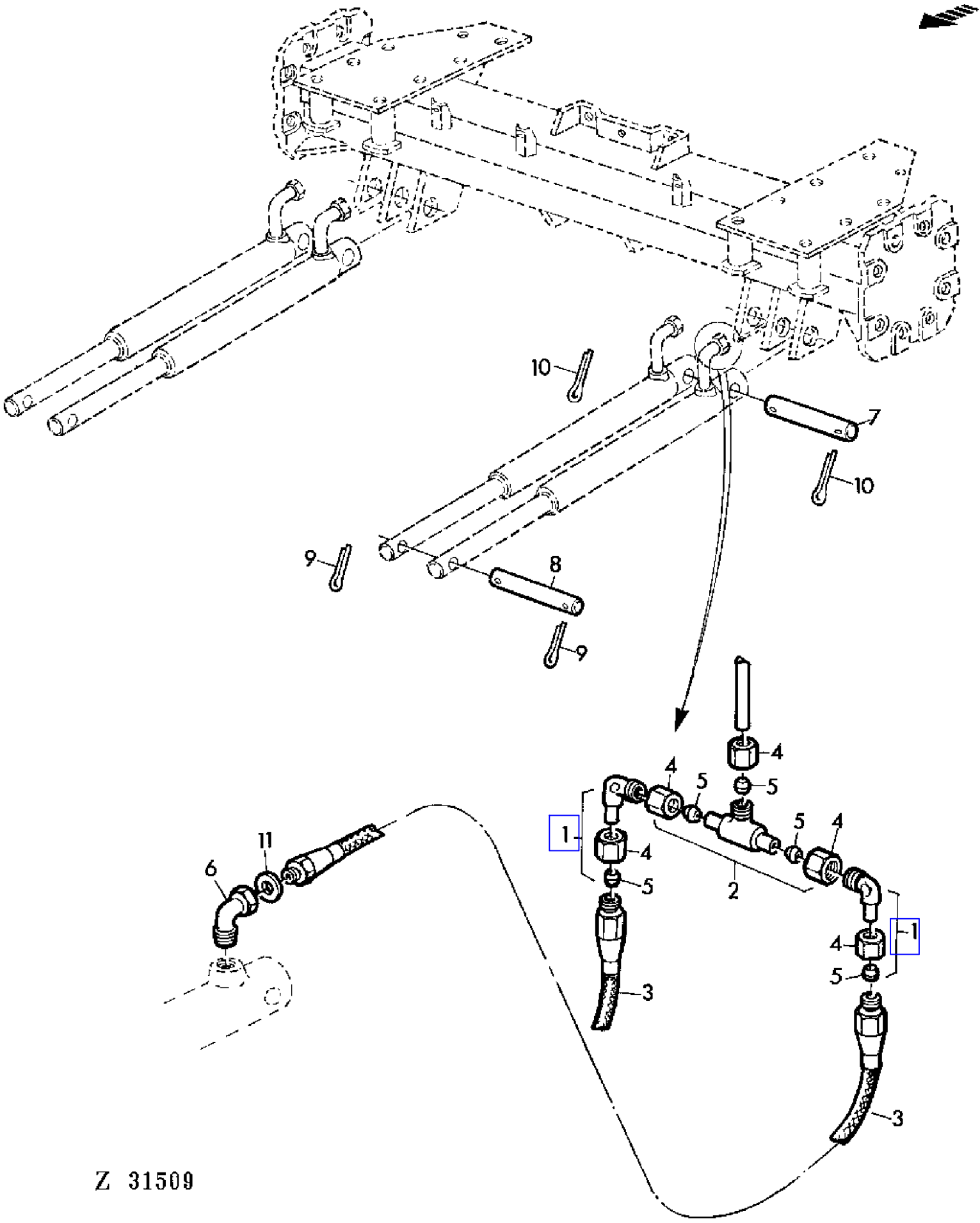

COPYRIGHT©1994 - 2008 DEERE & COMPANY Moline, Illinois All rights reserved

(2D14) HYDRAULIC LINES FOR DUAL LIGHT CYLINDERS
CANALISATIONS POUR VERINS DE LEVAGE DOUBLES
LEITUNGEN MIT DOPPELHUBZYLINDER
TUBAZIONI PER CILINDRI DI SOLLEVAMENTO DOPPI
TUBERIAS Y CILINDROS DE ELEVACION GEMELOS
HYDRAULLEDNINGAR FOR DUBBELLYFTCYLINDRAR

KEY	PART NO.	PART NAME	QTY	SERIAL NO.	975	975HY/4	REMARKS
1	AZ22524	ELBOW FITTING	AR		X	X	INCL KEYS 4,5
2	AZ22525	TEE FITTING	AR		X	X	INCL KEYS 4,5
3	AZ15362	HYDRAULIC HOSE	AR		X	X	
4	Z32971	TUBE NUT	AR		X	X	
5	Z32994	TAPERED SLEEVE	AR		X	X	
6	Z28060	ELBOW FITTING	AR		X	X	
7	Z33440	PIN	AR		X	X	
8	Z33441	PIN	AR		X	X	
9	11M7028	COTTER PIN	AR		X	X	5 X 35 MM
10	11M7030	COTTER PIN	AR		X		5 X 45 MM
	11M7038	COTTER PIN	AR			X	6,3 X 45 MM
11	51M4240	RING	AR		X	X	

COPYRIGHT©1994 - 2008 DEERE & COMPANY Moline, Illinois All rights reserved

(2C22) HYDRAULIC LINES(CUTTING PLATFORM)
CANALISATIONS HYDRAULIQUES(PLATE-FORME DE COUPE)
HYDRAULIKLEITUNGEN(SCHNEIDWERK)
LINEE IDRAULICHE(PLATTAFORMA DI TAGLIO)
TUBERIAS HIDRAULICAS(PLATAFORMA DE CORTE)
HYDRAULLEDNINGAR(SKARBORD)

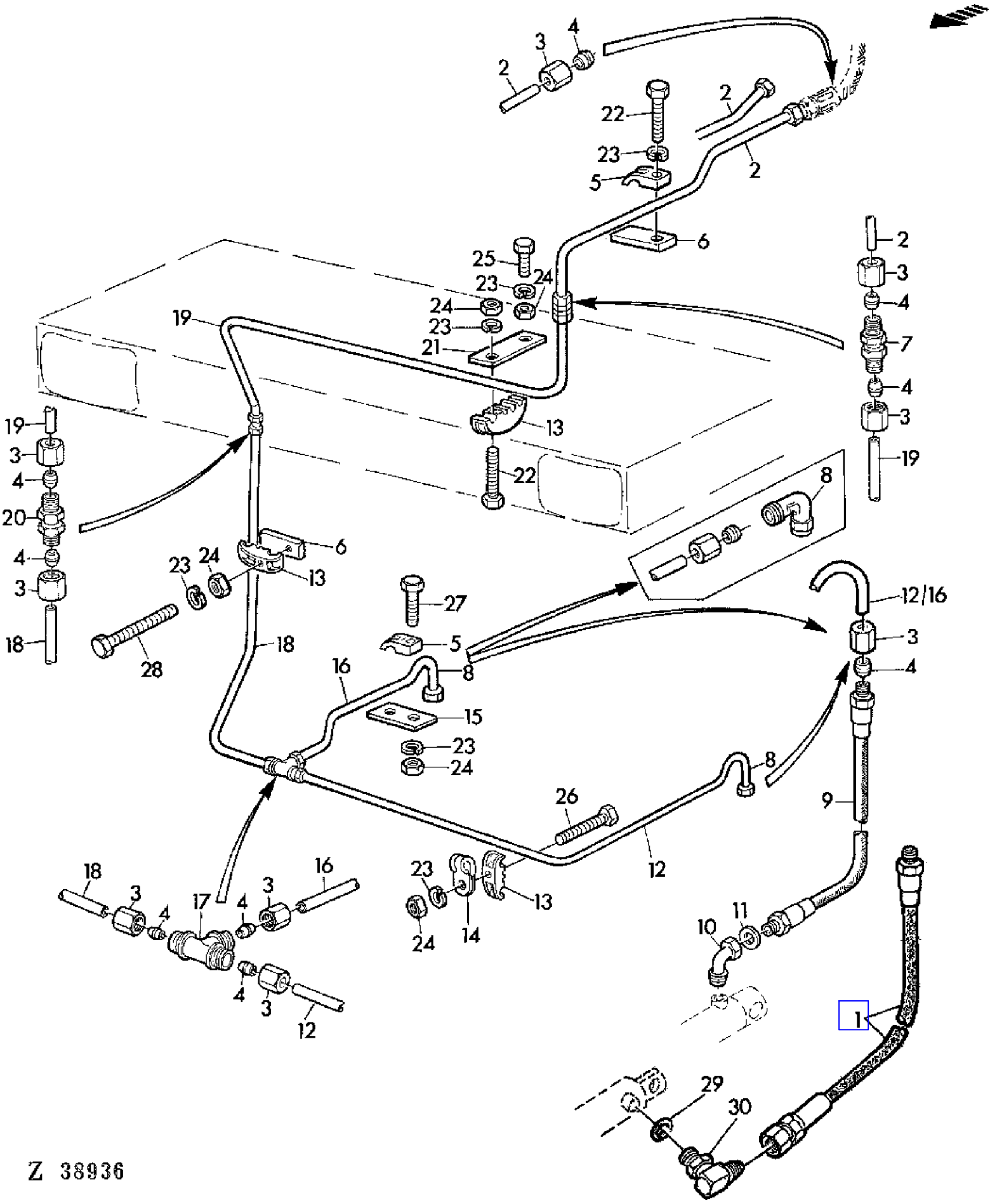

COPYRIGHT©1994 - 2008 DEERE & COMPANY Moline, Illinois All rights reserved

(2C22) HYDRAULIC LINES(CUTTING PLATFORM)
CANALISATIONS HYDRAULIQUES(PLATE-FORME DE COUPE)
HYDRAULIKLEITUNGEN(SCHNEIDWERK)
LINEE IDRAULICHE(PLATTAFORMA DI TAGLIO)
TUBERIAS HIDRAULICAS(PLATAFORMA DE CORTE)
HYDRAULLEDNINGAR(SKARBORD)

KEY	PART NO.	PART NAME	QTY	SERIAL NO.	975	975HY/4	REMARKS
1	AZ29901	HYDRAULIC HOSE	2		X	X	(FOR AR103522, AZ37511)
2	AZ23950	OIL LINE	1		X	X	INCL KEYS 3,4
3	Z32971	TUBE NUT	10		X	X	
4	Z32994	TAPERED SLEEVE	10		X	X	
5	Z34952	CLAMP	4		X	X	
6	Z30667	PLATE	4		X	X	
7	Z32980	UNION FITTING	1		X	X	
8	AZ22524	ELBOW FITTING	2	- 014887	X		
9	AZ15362	HYDRAULIC HOSE	2		X	X	(FOR AR90989, AZ37512)
10	Z28060	ELBOW FITTING	2		X	X	(FOR AR90989, AZ37512)
11	51M4240	RING	2		X	X	M18 X 22 (FOR AR90989, AZ37512)
12	AZ25659	OIL LINE	1		X	X	ASSY, INCL KEYS 3-4 (SUB FOR AZ23969)
13	Z30668	CLAMP	6		X	X	
14	Z22067	CLAMP	3		X	X	
15	Z34957	HOLDER	2		X	X	
16	AZ25660	OIL LINE	1		X	X	ASSY, INCL KEYS 3,4 (SUB FOR AZ23969)
17	Z32985	TEE FITTING	1		X	X	
18	AZ23968	OIL LINE	1		X	X	ASSY, INCL KEYS 3,4
19	AZ23954	OIL LINE	1		X	X	ASSY, INCL KEYS 3,4
20	Z32961	FITTING	1		X	X	
21	Z34959	STRAP	2		X	X	
22	19M7177	CAP SCREW	AR		X	X	M6 X 35
23	12M7012	LOCK WASHER	AR		X	X	6 MM
24	14M7027	NUT	AR		X	X	M6
25	19M7375	CAP SCREW	AR		X	X	M6 X 18
26	19M7320	CAP SCREW	AR		X	X	M6 X 40
27	19M7160	CAP SCREW	AR		X	X	M6 X 30
28	19M7547	CAP SCREW	AR		X	X	M6 X 55
29	R26375	O-RING	2		X	X	(FOR AR103522, AZ37511)
30	AR26763	ELBOW FITTING	2		X	X	(FOR AR103522, AZ37511)

COPYRIGHT©1994 - 2008 DEERE & COMPANY Moline, Illinois All rights reserved

(2D10) HYDRAULIC LINES-GROUND DRIVE
CANALISATIONS HYDRAULIQUES-COMMANDE D'AVANCEMENT
HYDRAULIKLEITUNGEN FAHRANTRIEB
LINEE IDRAULICHE-COMANDO D'AVANZAMENTO
TUBERIAS PARA EL VARIADOR DE VELOCIDAD DE MARCHA
HYDRAULLEDNINGAR-KORDRIVNING

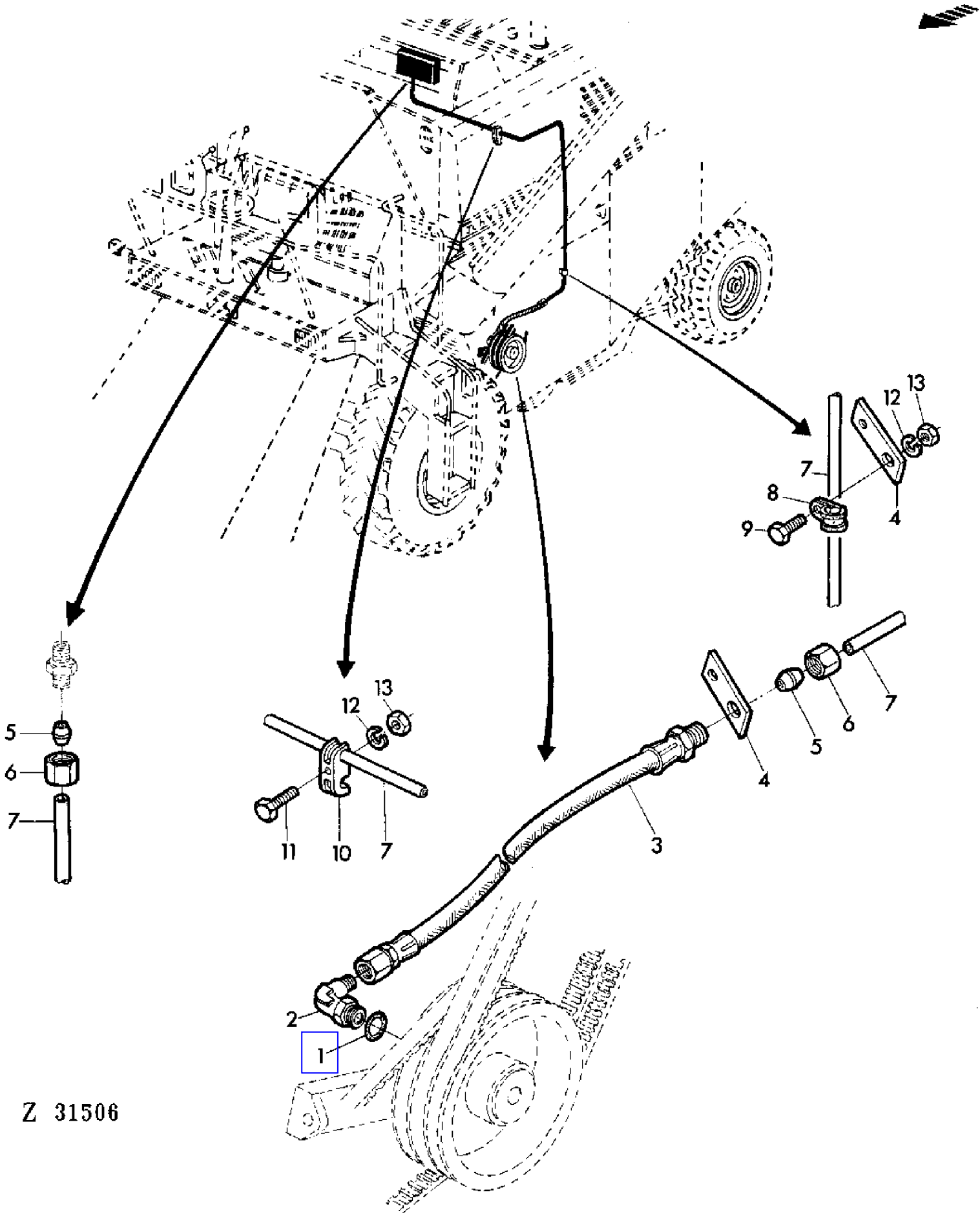

COPYRIGHT©1994 - 2008 DEERE & COMPANY Moline, Illinois All rights reserved

(2D10) HYDRAULIC LINES-GROUND DRIVE
CANALISATIONS HYDRAULIQUES-COMMANDE D'AVANCEMENT
HYDRAULIKLEITUNGEN FAHRANTRIEB
LINEE IDRAULICHE-COMANDO D'AVANZAMENTO
TUBERIAS PARA EL VARIADOR DE VELOCIDAD DE MARCHA
HYDRAULLEDNINGAR-KORDRIVNING

KEY	PART NO.	PART NAME	QTY	SERIAL NO.	975	975HY	REMARKS
1	R28782	O-RING	1		X		
2	AH63565	ELBOW FITTING	1		X		
3	AZ23700	HYDRAULIC HOSE	1		X		
4	Z34637	STRAP	2		X		
5	Z32997	SLEEVE FITTING	2		X		
6	Z32975	TUBE NUT	2		X		
7	AZ23953	OIL LINE	1		X		
8	Z29668	CLAMP	1		X		
9	19M7286	CAP SCREW	AR		X		M6 X 25
10	Z34953	CLAMP	1		X		
11	19M7177	CAP SCREW	1		X		M6 X 35
12	12M7012	LOCK WASHER	AR		X		6 MM
13	14M7027	NUT	AR		X		M6

COPYRIGHT©1994 - 2008 DEERE & COMPANY Moline, Illinois All rights reserved

(1H14) HYDRAULIC OIL RESERVOIR
RESERVOIR D'HUILE
OELTANK
SERBATOIO DELL'OLIO IDRAULICO
DEPOSITO HIDRAULICO
HYDRAULOLJETANK

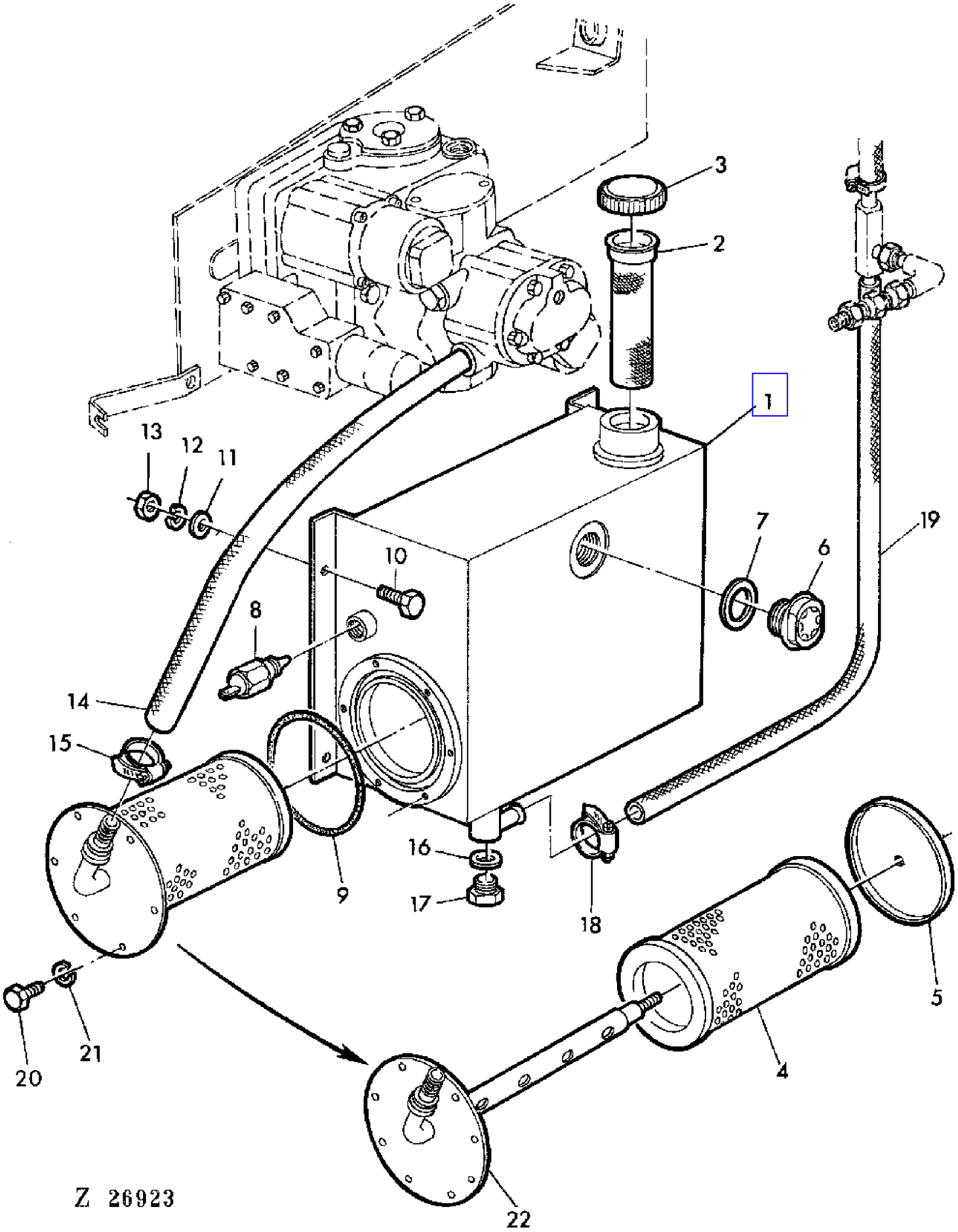

COPYRIGHT©1994 - 2008 DEERE & COMPANY Moline, Illinois All rights reserved

(1H14) HYDRAULIC OIL RESERVOIR
RESERVOIR D'HUILE
OELTANK
SERBATOIO DELL'OLIO IDRAULICO
DEPOSITO HIDRAULICO
HYDRAULOLJETANK

KEY	PART NO.	PART NAME	QTY	SERIAL NO.	975	975HY/4	REMARKS
1	AZ28526	HYDRAULIC RESERVOIR	1			X	
2	AH76992	STRAINER	1			X	
3	99M7046	FILLER CAP	1			X	
4	AE43494	FILTER ELEMENT	1			X	(SUB FOR AH76991)
5	AZ26407	COVER	1			X	
6	AZ23076	SEDIMENT BOWL	1			X	
7	U13639	O-RING	1			X	
8	AZ26994	SENDER	1			X	
9	E52687	O-RING	1			X	
10	19M7139	CAP SCREW	4			X	M8 X 20
11	24M7055	WASHER	AR			X	8,4 MM
12	12M7008	LOCK WASHER	AR			X	8 MM
13	14M7029	NUT	AR			X	M8
14	Z37507	HYDRAULIC HOSE	1			X	
15	Z26822	CLAMP	1			X	
16	51M4244	RING	1			X	22 X 27 MM
17	15M6650	DRAIN PLUG	1			X	22 X 1,5 MM
18	Z34829	CLAMP	1			X	
19	Z39178	HYDRAULIC HOSE	1			X	
20	19M6614	CAP SCREW	8			X	M6 X 12
21	12M7012	LOCK WASHER	AR			X	6 MM
22	AZ26408	FLANGE	1			X	

COPYRIGHT©1994 - 2008 DEERE & COMPANY Moline, Illinois All rights reserved

(2B06) HYDRAULIC OIL RESERVOIR
RESERVOIR D'HUILE HYDRAULIQUE
HYDRAULIK-OELBEHAELTER
SERBATOIO DELL'OLIO IDRAULICO
DEPOSITO DE ACEITE HIDRAULICO
HYDRAULOLJETANK

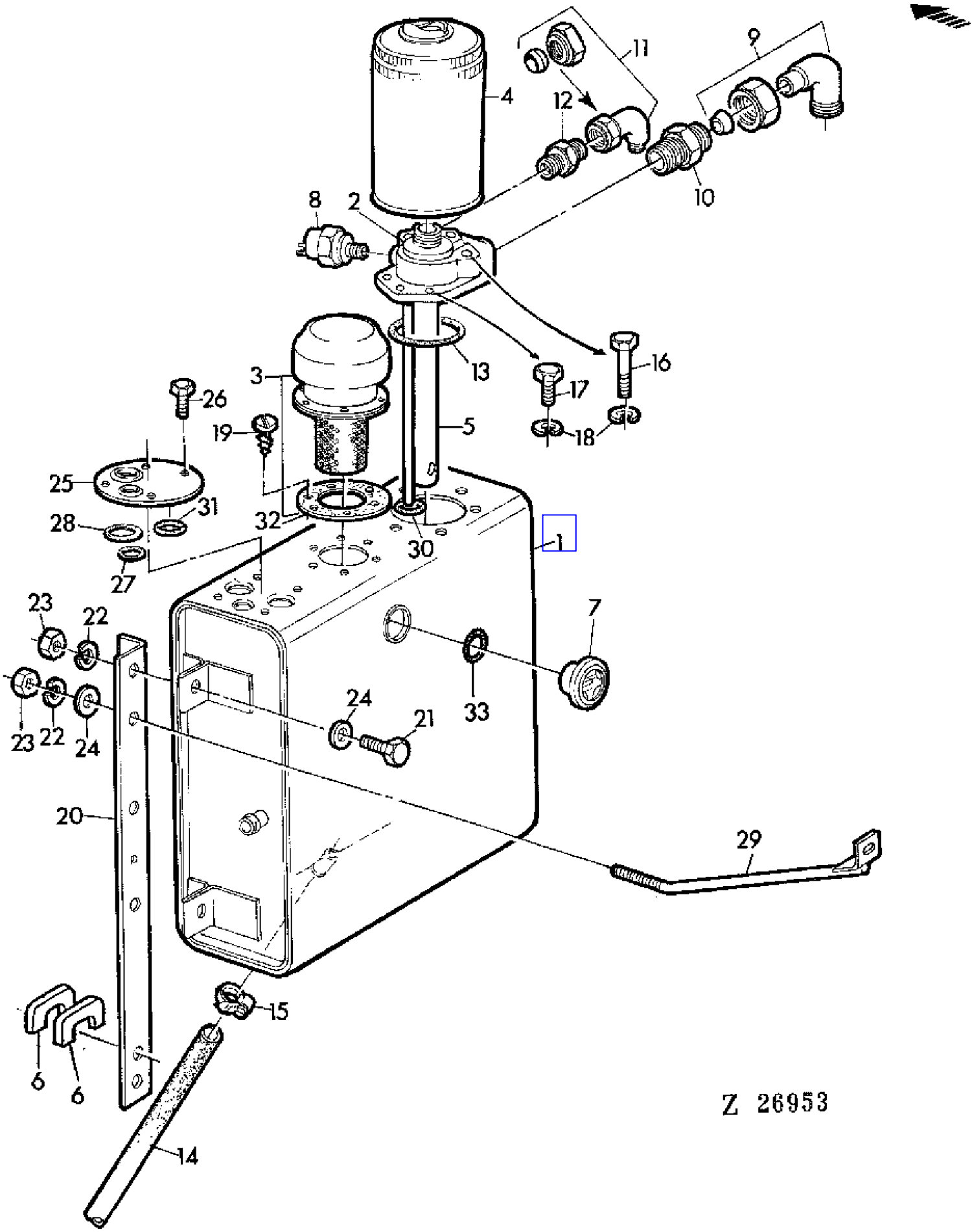

COPYRIGHT©1994 - 2008 DEERE & COMPANY Moline, Illinois All rights reserved

(2B06) HYDRAULIC OIL RESERVOIR
RESERVOIR D'HUILE HYDRAULIQUE
HYDRAULIK-OELBEHAELTER
SERBATOIO DELL'OLIO IDRAULICO
DEPOSITO DE ACEITE HIDRAULICO
HYDRAULOLJETANK

KEY	PART NO.	PART NAME	QTY	SERIAL NO.	975	975HY/4	REMARKS
1	AZ22879	HYDRAULIC RESERVOIR	1		X	X	
2	AZ22884	FILTER	1		X	X	
3	AZ36548	STRAINER	1		X	X	ASSY, INCL KEY 32 (SUB FOR AZ22882)
4	AZ22878	FILTER	1		X	X	
5	Z34046	PIPE	1		X	X	
6	Z37822	SHIM	AR	- 015187	X		
7	AZ23076	SEDIMENT BOWL	1		X	X	
8	AZ22892	SENDER	1		X	X	
9	AZ21976	ELBOW FITTING	1		X	X	
10	Z34054	ADAPTER	1		X	X	
11	AZ21974	ELBOW FITTING	1		X	X	
12	Z34060	ADAPTER	1		X	X	
13	F1430R	O-RING	1		X	X	
14	Z46100	HOSE	1		X	X	(SUB FOR Z28156)
15	Z26822	CLAMP	1		X	X	
16	19M7319	SCREW	AR		X	X	M6 X 55
17	19M7286	CAP SCREW	AR		X	X	M6 X 25
18	12M7012	LOCK WASHER	AR		X	X	6 MM
19	37M7011	SCREW	6	- 022077	X	X	4,8 X 9,5 MM
	37M7020	SCREW	6	022078 -	X	X	4,2 X 13 MM
20	Z34077	ANGLE	2		X	X	
21	19M7139	CAP SCREW	AR		X	X	8 X 20 MM
22	12M7008	LOCK WASHER	AR		X	X	8 MM
23	14M7029	NUT	AR		X	X	M8
24	24M7055	WASHER	AR		X	X	8,4 MM
25	AZ25798	COVER	1		X	X	
26	19M7375	CAP SCREW	4		X	X	M6 X 18
27	Z34796	O-RING	1		X	X	
28	Z34797	O-RING	AR		X	X	
29	AZ23828	BRACE	1		X	X	
30	R459R	O-RING	1		X	X	
31	U46166	O-RING	1		X	X	
32	Z36623	GASKET	2		X	X	
33	U13639	O-RING	1		X	X	

COPYRIGHT©1994 - 2008 DEERE & COMPANY Moline, Illinois All rights reserved

(2D18) HYDRAULIC OIL RESERVOIR FOR HYDROSTATIC REEL DRIVE
RESERVOIR D'HUILE POUR ENTRAINEMENT HYDROSTATIQUE DU RABATTE
HYDRAULIKOELTANK FUER HYDROST.HASPELANTRIEB
SERBATOIO OLIO PER COMANDO IDROSTATICO DELL'ASPO
DEPOSITO HIDRAULICO PARA EL ACCIONAMIENTO DEL MOLINETE
OLJETANK FOR HYDROSTATISK HASPELDRIVNING

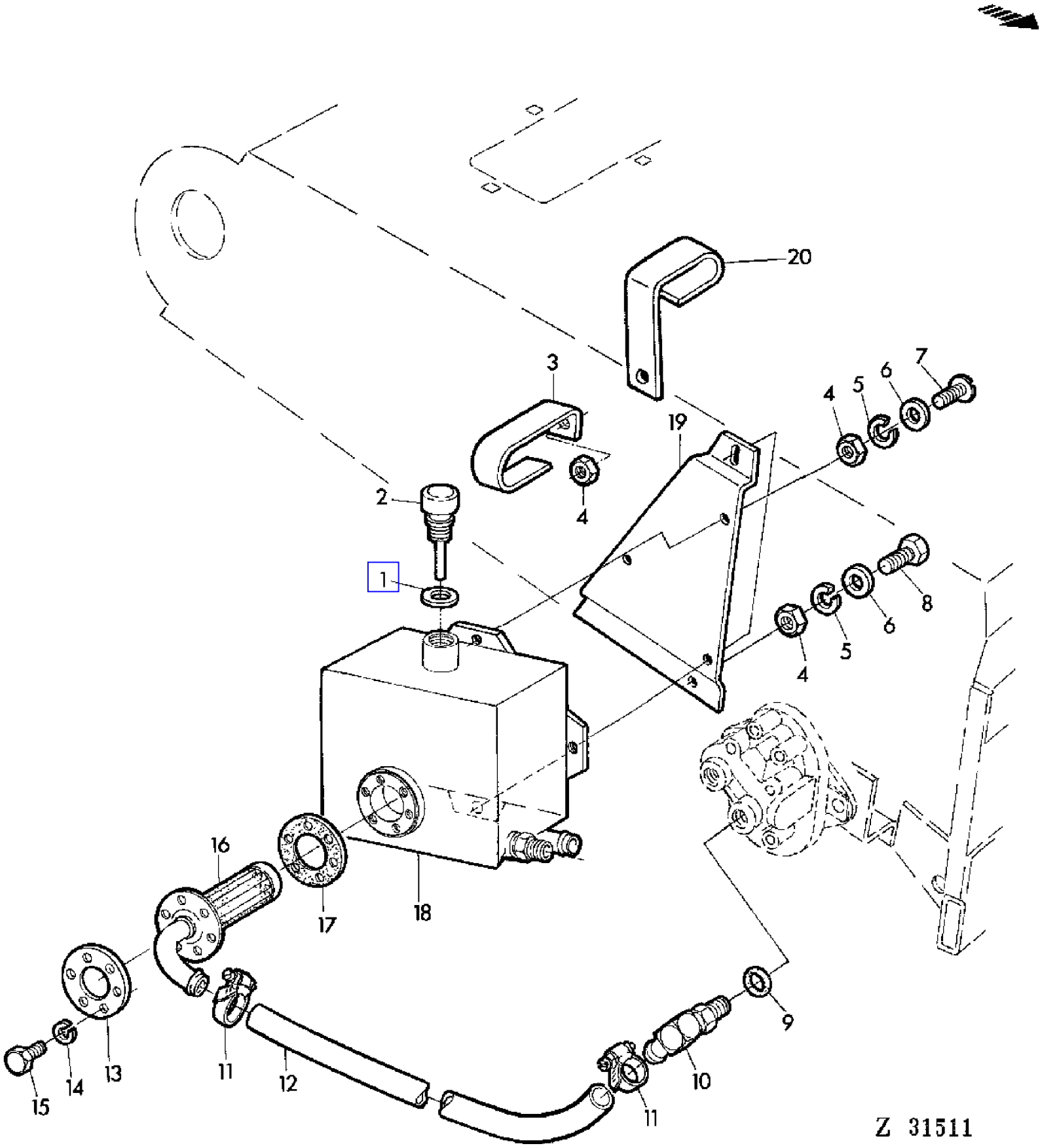

COPYRIGHT©1994 - 2008 DEERE & COMPANY Moline, Illinois All rights reserved

(2D18) HYDRAULIC OIL RESERVOIR FOR HYDROSTATIC REEL DRIVE
RESERVOIR D'HUILE POUR ENTRAINEMENT HYDROSTATIQUE DU RABATTE
HYDRAULIKOELTANK FUER HYDROST.HASPELANTRIEB
SERBATOIO OLIO PER COMANDO IDROSTATICO DELL'ASPO
DEPOSITO HIDRAULICO PARA EL ACCIONAMIENTO DEL MOLINETE
OLJETANK FOR HYDROSTATISK HASPELDRIVNING

KEY	PART NO.	PART NAME	QTY	SERIAL NO.	975	975HY	REMARKS
1	51M4247	RING	1		X	X	
2	AL17552	BREATHER	1		X	X	
3	Z36072	HOLDER	1		X		
4	14M7029	NUT	AR		X	X	M8
5	12M7008	LOCK WASHER	AR		X	X	8 MM
6	24M7036	WASHER	AR		X	X	M9
7	19M7139	CAP SCREW	AR		X	X	M8 X 20
8	19M7163	CAP SCREW	AR		X	X	M8 X 25
9	U12547	O-RING	1		X	X	
10	AR68999	ELBOW FITTING	1		X	X	
11	Z26822	CLAMP	2		X	X	
12	Z36049	HOSE	1		X	X	
13	Z26827	WASHER	1		X	X	
14	12M7012	LOCK WASHER	AR		X	X	6 MM
15	19M7077	CAP SCREW	AR		X	X	M6 X 20
16	AZ25027	FILTER	1		X	X	
17	Z26828	GASKET	1		X	X	
18	AZ32229	HYDRAULIC RESERVOIR	1		X	X	(SUB FOR AZ15811)
19	Z36558	HOLDER	1		X	X	
20	Z37637	HOLDER	1		X		(A)
	Z37637	HOLDER	1			X	

(A) WITH LONG FEEDER HOUSE
AVEC CONVOYEUR D'ALIMENTACION LONG
BEI LANGEM SCHRAEGFOERDERER
CON COLLO ALIMENTATORE LUNGO
CON ELEVADOR DE MIES LARGO
VID LANG INMATNINGSELEVATOR

COPYRIGHT©1994 - 2008 DEERE & COMPANY Moline, Illinois All rights reserved

(2B10) HYDRAULIC PUMP AND BELT TENSIONER
POMPE HYDRAULIQUE ET GALET TENDEUR
HYDRAULIKPUMPE UND RIEMENSPANNROLLE
POMPA IDRAULICA E TENDICINGHIA
BOMBA HIDRAULICA Y TENSOR DE CORREA
HYDRAULPUMP OCH REMSPANNARE

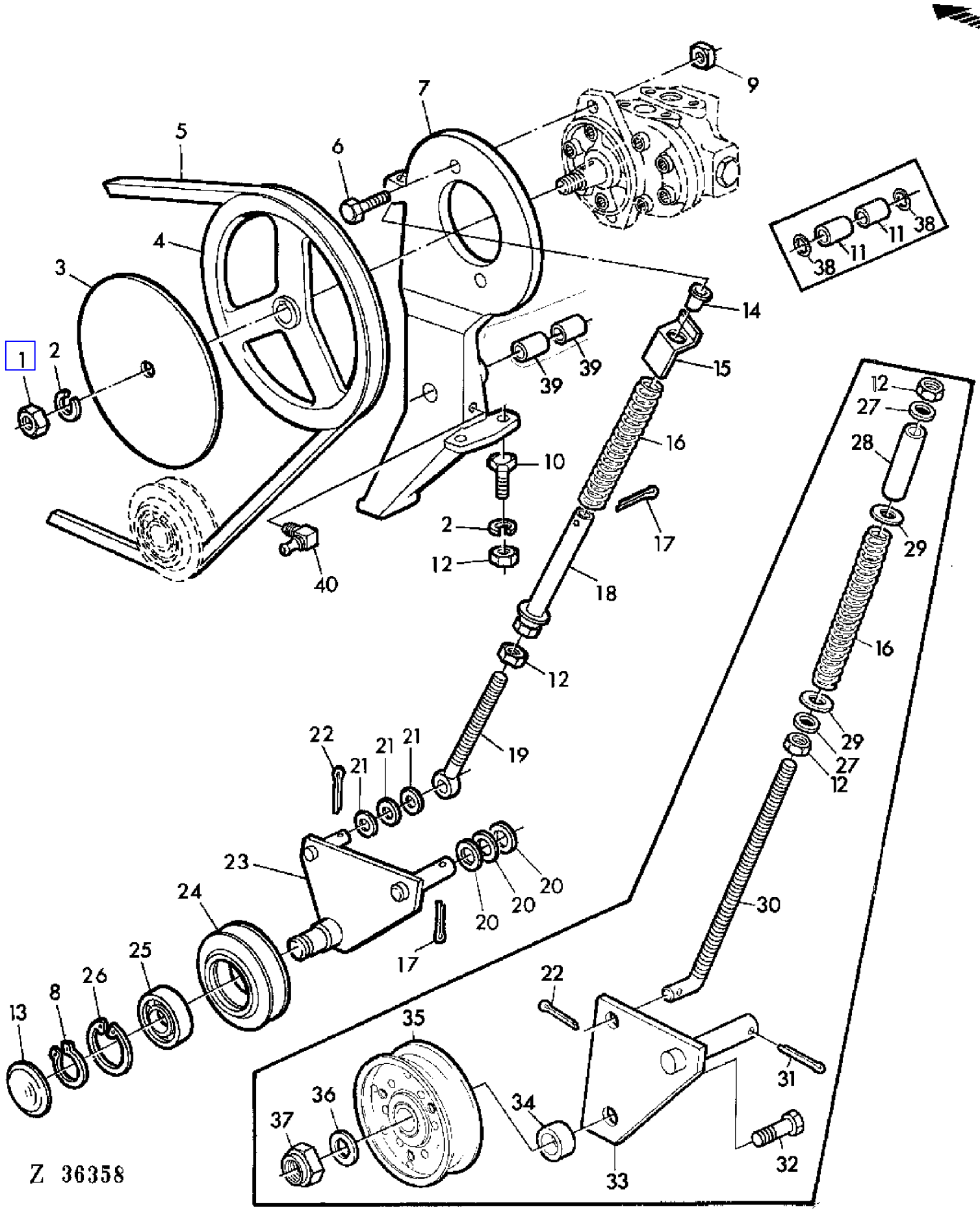

COPYRIGHT©1994 - 2008 DEERE & COMPANY Moline, Illinois All rights reserved

(2B10) HYDRAULIC PUMP AND BELT TENSIONER
POMPE HYDRAULIQUE ET GALET TENDEUR
HYDRAULIKPUMPE UND RIEMENSPANNROLLE
POMPA IDRAULICA E TENDICINGHIA
BOMBA HIDRAULICA Y TENSOR DE CORREA
HYDRAULPUMP OCH REMSPANNARE

KEY	PART NO.	PART NAME	QTY	SERIAL NO.			975	975HY/4	REMARKS
1	14H812	NUT	1				X	X	3/8"
2	12M7013	LOCK WASHER	AR				X	X	10 MM
3	Z25857	WASHER	1				X	X	
4	Z10836	PULLEY	1				X	X	
5	Z34828	BELT	1				X	X	
6	19M7168	CAP SCREW	2				X	X	M10 X 30
7	Z11113	SUPPORT	1		-	021357	X		
	AZ31053	SUPPORT	1	021358	-		X	X	(SUB FOR AZ28035)
8	40M1825	SNAP RING	1	021358	-		X	X	20 X 1,2 MM
9	Z26792	NUT	2				X	X	
10	19M7169	CAP SCREW	2				X	X	M10 X 35
11	Z38138	SPACER	2	021358	-	023492	X	X	
12	14M7140	NUT	AR				X	X	M10
13	30M7002	PLUG	1	021358	-		X	X	48 MM
14	Z22711	PLUG	1	021358	-		X	X	
15	Z38783	HOLDER	1	021358	-		X	X	
16	Z34825	COMPRESSION SPRING	1				X	X	
17	11M7022	COTTER PIN	AR	021358	-		X	X	4 X 28 MM
18	AZ28038	GUIDE	1	021358	-		X	X	
19	Z38738	EYEBOLT	1	021358	-		X	X	
20	L19386	WASHER	3	021358	-		X	X	
21	24M7056	WASHER	3	021358	-		X	X	10,5 MM
22	11M7012	COTTER PIN	1	021358	-		X	X	3,2 X 16 MM
23	AZ28037	PIVOT	1	021358	-		X	X	
24	Z11188	IDLER	1	021358	-		X	X	
25	JD30071	BALL BEARING	1	021358	-		X	X	
26	40M1863	SNAP RING	1	021358	-		X	X	47 X 1,75 MM
27	24M7040	WASHER	2		-	021357	X		11 MM
28	Z34824	SPACER	1		-	021357	X		
29	24M7113	WASHER	1		-	021357	X		17 MM
30	Z34827	HOOK BOLT	1		-	021357	X		
31	11M7020	COTTER PIN	1		-	021357	X		4 X 25 MM
32	19M7330	CAP SCREW	1		-	021357	X		M12 X 55
33	AZ23853	RETAINER	1		-	021357	X		
34	Z34823	SPACER	1		-	021357	X		
35	AZ24263	IDLER	1		-	021357	X		
36	24M7111	WASHER	1		-	021357	X		13 MM
37	14M7168	LOCK NUT	1		-	021357	X		M12
38	Z39564	FELT	2	023493	-	XXXX	X	X	
39	Z41255	SPACER	2	023493	-		X	X	(SUB FOR Z39563)
40	58M7008	LUBRICATION FITTING	1				X	X	8 X 1 MM

COPYRIGHT©1994 - 2008 DEERE & COMPANY Moline, Illinois All rights reserved

(2D16) HYDRAULIC PUMP FOR HYDROSTATIC REEL DRIVE
POMPE HYDRAULIQUE POUR ENTRAINEMENT DU RABATTEUR
HYDRAULIKPUMPE FUER HYDROST.HASPELANTRIEB
POMPA IDRAULICA PER COMANDO DELL'ASPO
BOMBA HIDRAULICA PARA EL ACCIONAMIENTO DEL MOLINETE
HYDRAULPUMP FOR HYDROSTATISK HASPELDRIVNING

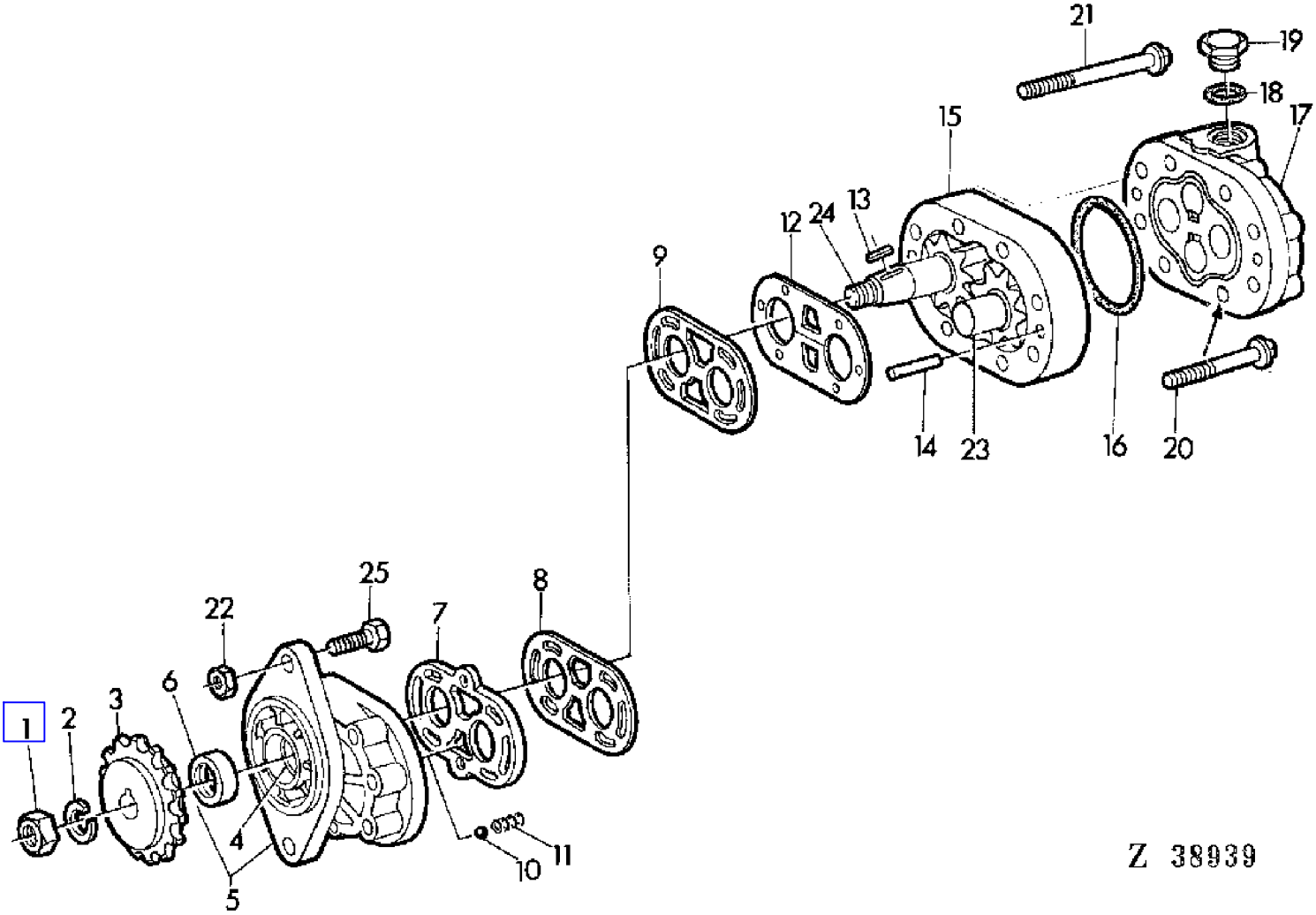

COPYRIGHT©1994 - 2008 DEERE & COMPANY Moline, Illinois All rights reserved

(2D16) HYDRAULIC PUMP FOR HYDROSTATIC REEL DRIVE
POMPE HYDRAULIQUE POUR ENTRAINEMENT DU RABATTEUR
HYDRAULIKPUMPE FUER HYDROST.HASPELANTRIEB
POMPA IDRAULICA PER COMANDO DELL'ASPO
BOMBA HIDRAULICA PARA EL ACCIONAMIENTO DEL MOLINETE
HYDRAULPUMP FOR HYDROSTATISK HASPELDRIVNING

KEY	PART NO.	PART NAME	QTY	SERIAL NO.	975	975HY	REMARKS
1	14H812	NUT	1		X	X	3/8"
2	12M7013	LOCK WASHER	1		X	X	10 MM
3	Z36048	CHAIN SPROCKET	1		X	X	Z = 19
4	.....	HOUSING	1		X	X	NSEP (ORD AT12111)
5	AT12111	HOUSING	1		X	X	W/ KEY 4
6	AH15442	SEAL	1		X	X	NSEP (ORD AH66648)
7	.....	GASKET	1		X	X	NSEP (ORD AH66648)
8	.....	GASKET	1		X	X	NSEP (ORD AH66648)
9	.....	GASKET	1		X	X	NSEP (ORD AH66648)
10	.....	BALL	2		X	X	NSEP (ORD AH66648)
11	.....	SPRING	2		X	X	NSEP (ORD AH66648)
12	.....	DIAPHRAGM	1		X	X	NSEP (ORD AH66648)
13	N34986	SHAFT KEY	1		X	X	
14	E61860	DOWEL PIN	2		X	X	(SUB FOR H65662)
15	H65661	HOUSING	1		X	X	
16	.....	O-RING	1		X	X	NSEP (ORD AH66648)
17	AH66645	PLATE	1		X	X	
18	R28782	O-RING	1		X	X	
19	R51031	FITTING	1		X	X	(ORD W/ R28782) (SUB FOR AH63282)
20	T12966	CAP SCREW	4		X	X	5/16" X 3"
21	H63061	BOLT	4		X	X	5/16" X 3-1/4"
22	Z26792	NUT	2		X	X	10 MM
23	AH66646	GEAR	1		X	X	
24	AE36861	STEERING GEAR	1		X	X	(SUB FOR AH66647)
25	19M7168	CAP SCREW	2		X	X	M10 X 30
..	AH66400	HYDRAULIC PUMP	1		X	X	ASSY, INCL KEYS 1,2,4-19,23,24
..	AH66648	KIT	1		X	X	KIT, INCL KEYS 6-12,16

COPYRIGHT©1994 - 2008 DEERE & COMPANY Moline, Illinois All rights reserved

(2C11) HYDRAULIC SWING UNLOADING AUGER CYLINDER
VERIN-GOULOTTE DE VIDANGE ORIENTABLE
ZYLINDER-SCHWENKBARES ENTLEERROHR
CILINDRO-COCLEA DI SCARICO RIBALTABILE
CILINDRO-MANGA DE DESCARGA REPLEGABLE
HYDRAULCYLINDER-SVAENGBART TOEMNINGSSKRUV

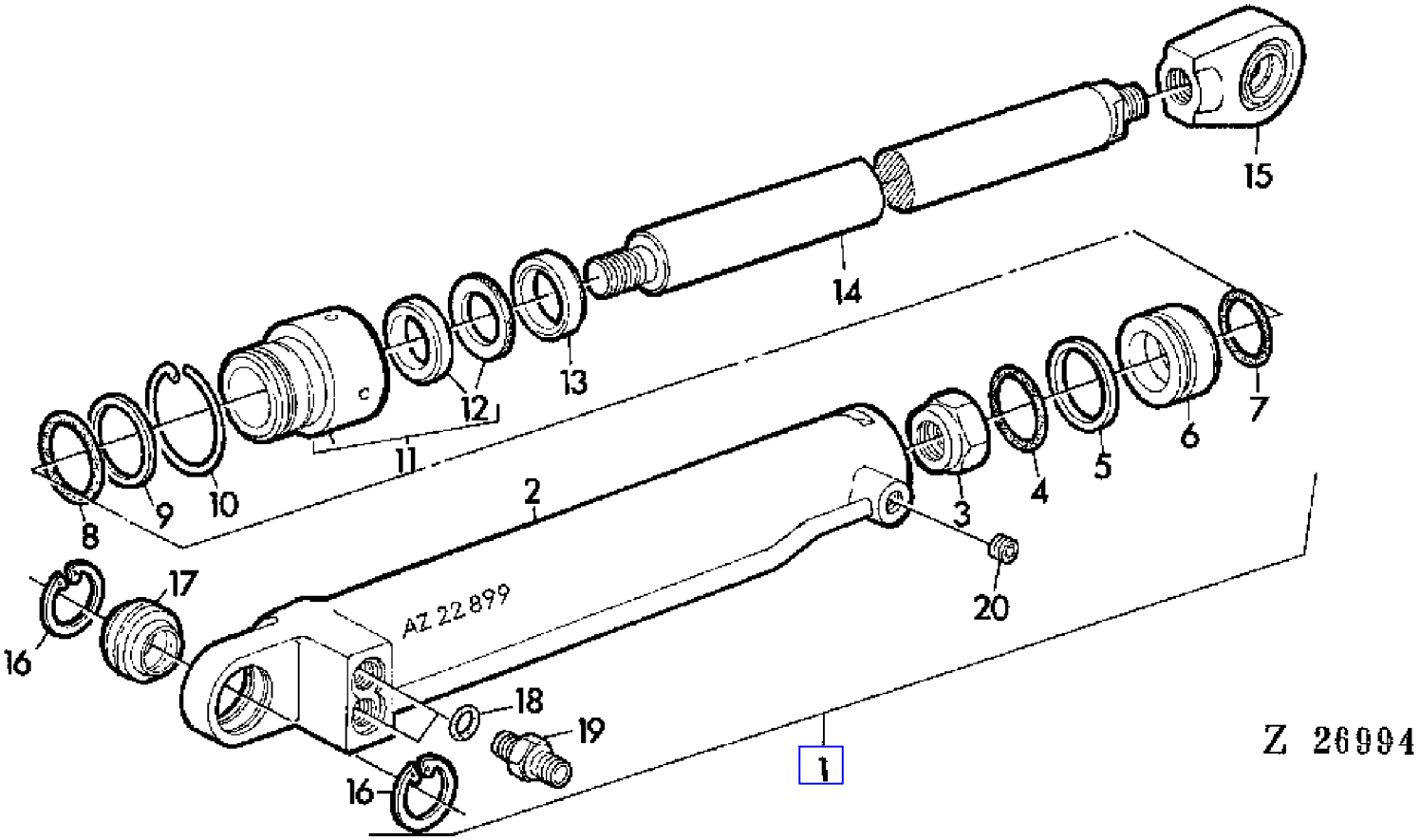

COPYRIGHT©1994 - 2008 DEERE & COMPANY Moline, Illinois All rights reserved

(2C11) HYDRAULIC SWING UNLOADING AUGER CYLINDER
VERIN-GOULOTTE DE VIDANGE ORIENTABLE
ZYLINDER-SCHWENKBARES ENTLEERROHR
CILINDRO-COCLEA DI SCARICO RIBALTABILE
CILINDRO-MANGA DE DESCARGA REPLEGABLE
HYDRAULCYLINDER-SVAENGBART TOEMNINGSSKRUV

KEY	PART NO.	PART NAME	QTY	SERIAL NO.	975	975HY/4	REMARKS
1	AZ22899	HYDRAULIC CYLINDER	1	- 021565	X	X	ASSY, INCL KEYS 2-17 (ORD AZ37519)
2	.....	HYDRAULIC CYLINDER BARREL	1	- 021565	X	X	NSEP (ORD AZ37519)
3	Z29852	LOCK NUT	1	- 021565	X	X	
4	.....	O-RING	1	- 021565	X	X	(ORD AZ37848)
5	.....	PISTON RING	1	- 021565	X	X	(ORD AZ37848)
6	.....	PISTON	1	- 021565	X	X	NSEP (ORD AZ37519)
7	.....	O-RING	1	- 021565	X	X	(ORD AZ37848)
8	.....	O-RING	1	- 021565	X	X	(ORD AZ37848) (SUB FOR R29463)
9	.....	SCRAPER RING	1	- 021565	X	X	(ORD AZ37848)
10	.....	SNAP RING	1	- 021565	X	X	(ORD AZ37848)
11	.....	GUIDE	1		X	X	(ORD AZ37519)
12	.....	SEAL KIT	1	- 021565	X	X	(ORD AZ37848)
13	.....	SCRAPER RING	1	- 021565	X	X	(ORD AZ37848) (SUB FOR Z29862)
14	.....	BAR	1	- 021565	X	X	NSEP (ORD AZ37519)
15	AZ23910	CASE	1	- 021565	X	X	
16	H85994	SNAP RING	4	- 021565	X	X	
17	AZ23708	BUSHING	2		X	X	
18	R26448	O-RING	2		X	X	
19	Z32969	FITTING	2		X	X	
20	15H560	PIPE PLUG	1	- 021565	X	X	
..	AZ37848	GASKET KIT	1	- 021565	X	X	KIT, INCL KEYS 4,5,7-10,13 (FOR AZ22899)

COPYRIGHT©1994 - 2008 DEERE & COMPANY Moline, Illinois All rights reserved

(2C12) HYDRAULIC SWING UNLOADING AUGER CYLINDER
VERIN-GOULOTTE DE VIDANGE ORIENTABLE
ZYLINDER-SCHWENKBARES ENTLEERROHR
CILINDRO-COCLEA DI SCARICO RIBALTABILE
CILINDRO-MANGA DE DESCARGA REPLEGABLE
HYDRAULCYLINDER-SVANGBART TOMNINGSSKRUV

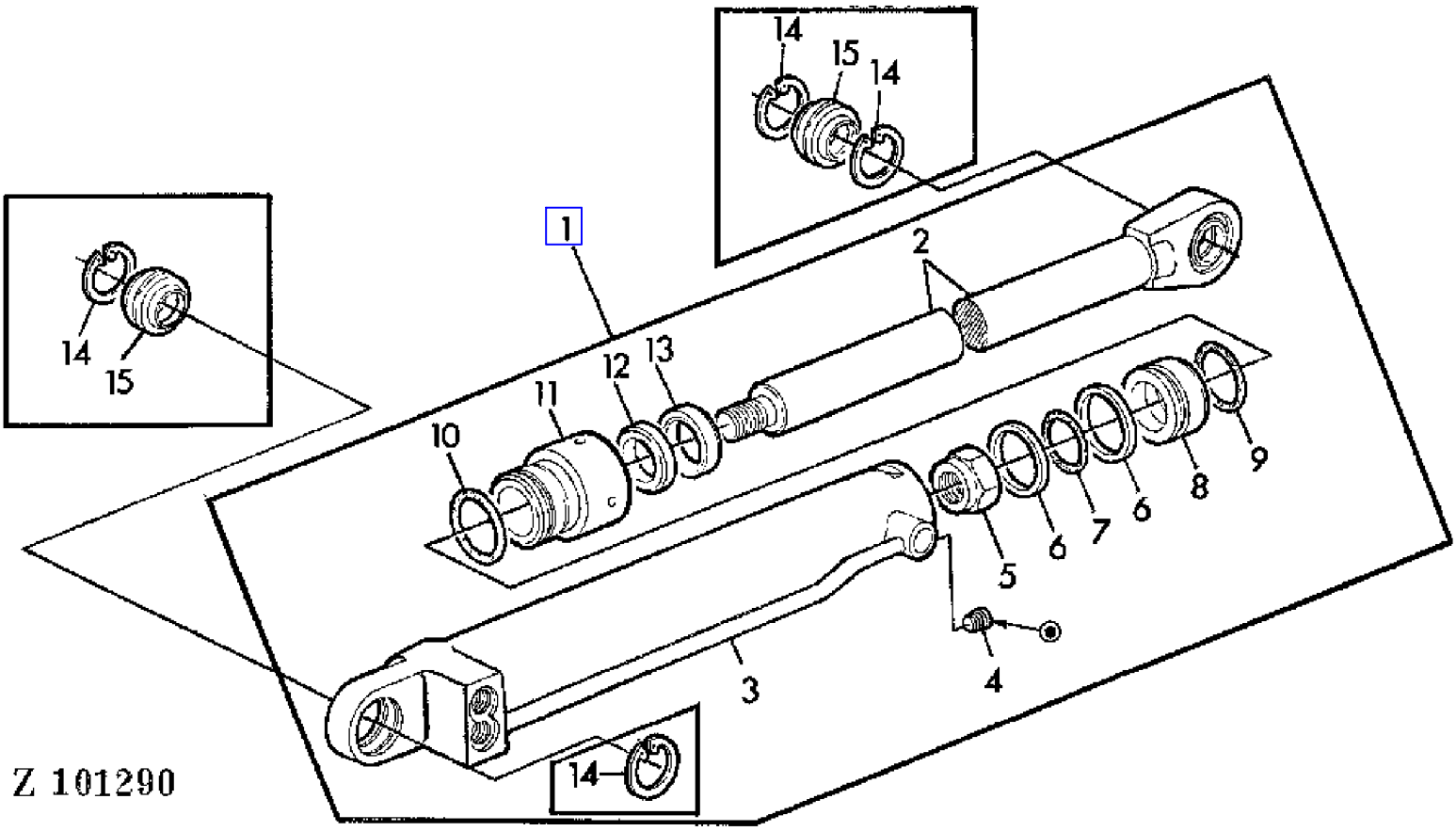

COPYRIGHT©1994 - 2008 DEERE & COMPANY Moline, Illinois All rights reserved

(2C12) HYDRAULIC SWING UNLOADING AUGER CYLINDER
VERIN-GOULOTTE DE VIDANGE ORIENTABLE
ZYLINDER-SCHWENKBARES ENTLEERROHR
CILINDRO-COCLEA DI SCARICO RIBALTABILE
CILINDRO-MANGA DE DESCARGA REPLEGABLE
HYDRAULCYLINDER-SVANGBART TOMNINGSSKRUV

KEY	PART NO.	PART NAME	QTY	SERIAL NO.			975	975HY/4	REMARKS
1	AR90986	HYDRAULIC CYLINDER	1	021566	-		X	X	(ORD AZ37519)
2	.....	BAR	1	021566	-		X	X	NSEP (ORD AZ37519) (SUB FOR AR91006)
3	.....	HYDRAULIC CYLINDER BARREL	1	021566	-		X	X	NSEP (ORD AZ37519)
4	15H559	PIPE PLUG	1	021566	-		X	X	1/4"
5	R69706	LOCK NUT	1	021566	-		X	X	
6	.....	BACK-UP RING	2	021566	-		X	X	(ORD AZ37834)
7	.....	O-RING	1	021566	-		X	X	(ORD AZ37834)
8	.....	PISTON	1	021566	-		X	X	NSEP (ORD AZ37519)
9	.....	O-RING	1	021566	-		X	X	(ORD AZ37834)
10	.....	O-RING	1	021566	-		X	X	(ORD AZ37834)
11	.....	GUIDE	1	021566	-		X	X	NSEP (ORD AZ37519)
12	.....	PACKING	1	021566	-		X	X	(ORD AZ37834)
13	.....	SEAL	1	021566	-		X	X	(ORD AZ37834) (SUB FOR A69686)
14	R54114	SNAP RING	AR	021566	-	XXXX	X	X	
15	AZ23708	BUSHING	AR	021566	-	XXXX	X	X	
..	AZ37834	GASKET KIT	1	021566	-		X	X	KIT, INCL KEYS 6,7,9,10,12,13 (FOR AR90986)

COPYRIGHT©1994 - 2008 DEERE & COMPANY Moline, Illinois All rights reserved

(2C14) HYDRAULIC SWING UNLOADING AUGER CYLINDER
VERIN-GOULOTTE DE VIDANGE ORIENTABLE
ZYLINDER-SCHWENKBARES ENTLEERROHR
CILINDRO-COCLEA DI SCARICO RIBALTABILE
CILINDRO-MANGA DE DESCARGA REPLEGABLE
HYDRAULCYLINDER-SVANGBART TOMNINGSSKRUV

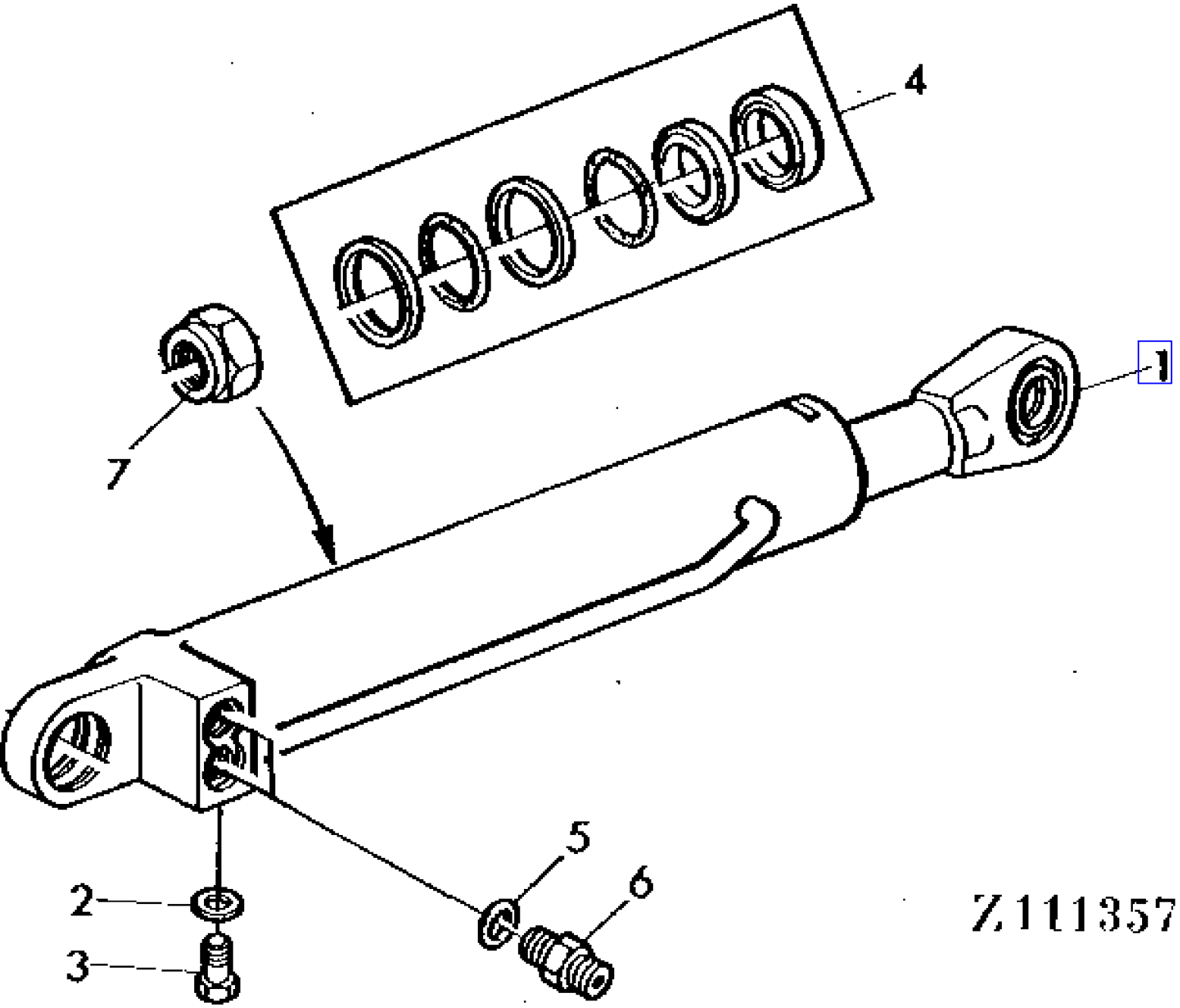

COPYRIGHT©1994 - 2008 DEERE & COMPANY Moline, Illinois All rights reserved

(2C14) HYDRAULIC SWING UNLOADING AUGER CYLINDER
VERIN-GOULOTTE DE VIDANGE ORIENTABLE
ZYLINDER-SCHWENKBARES ENTLEERROHR
CILINDRO-COCLEA DI SCARICO RIBALTABILE
CILINDRO-MANGA DE DESCARGA REPLEGABLE
HYDRAULCYLINDER-SVANGBART TOMNINGSSKRUV

KEY	PART NO.	PART NAME	QTY	SERIAL NO.	975	975HY	REMARKS
1	AZ37519	HYDRAULIC CYLINDER	1		X	X	(SUB FOR AR90986, AZ26169)
2	H35247	WASHER	1		X	X	
3	H35248	SCREW	1		X	X	
4	AZ37814	SEAL KIT	1		X	X	KIT, INCL KEY 2 (FOR AZ37519)
5	R26448	O-RING	2		X	X	
6	Z32969	FITTING	2		X	X	
7	Z47518	LOCK NUT	1		X	X	

COPYRIGHT©1994 - 2008 DEERE & COMPANY Moline, Illinois All rights reserved

(4G02) HYDRAULIC SWING UNLOADING AUGER GUARD
GARANTS DE GOULOTTE DE VIDANGE HYDRAULIQUE
SCHUTZE-HYDRAULISCH SCHWENKBARES ENTLEERROHR
RIPARICOCLEA SCARICO IDRAULICA
CORAZAS DEL TUBO DE DESCARGA HIDRAULICO
SKYDD FOR HYDRAULISKT SVANGBAR TOMNINGSSKRUV

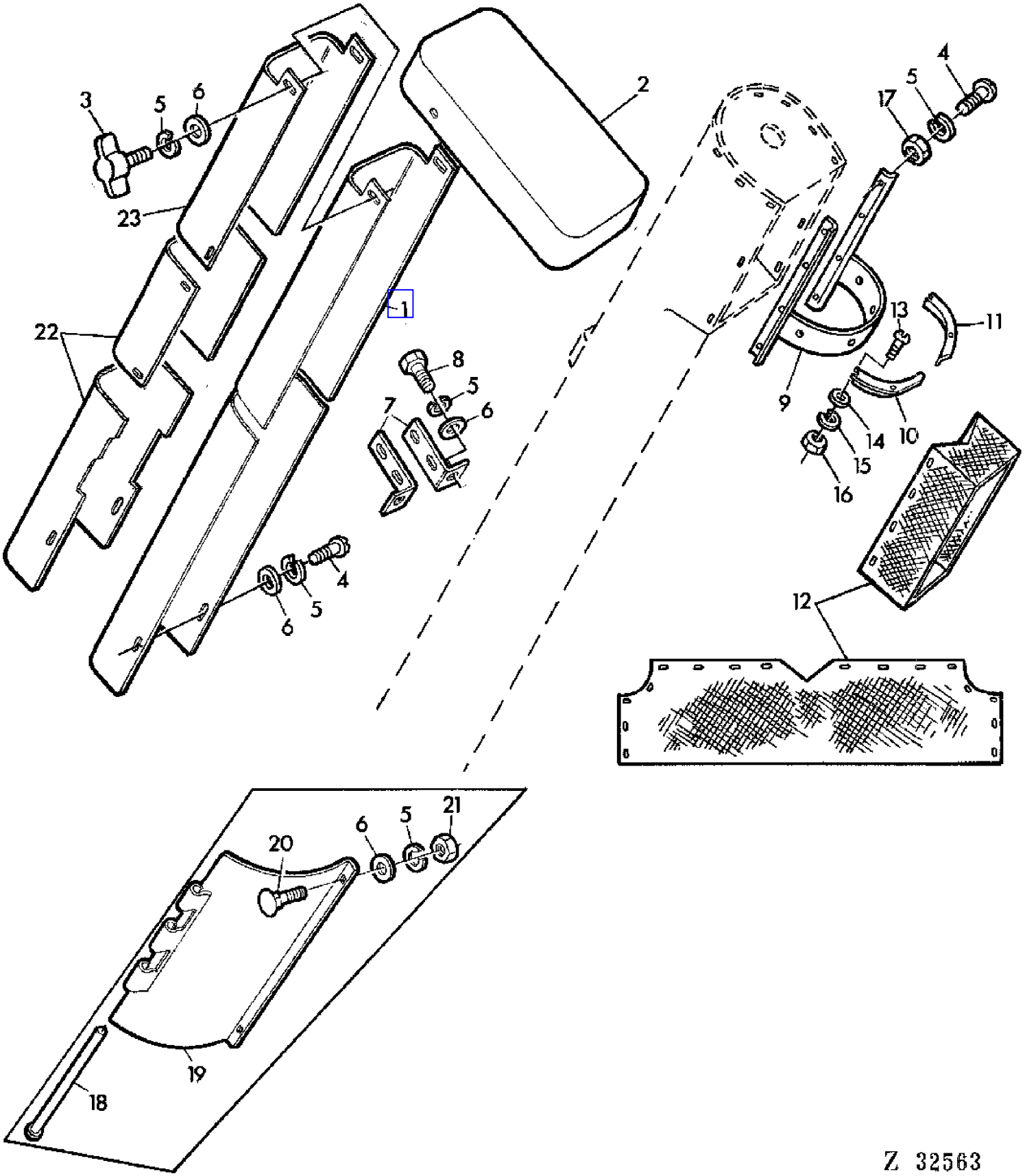

COPYRIGHT©1994 - 2008 DEERE & COMPANY Moline, Illinois All rights reserved

(4G02) HYDRAULIC SWING UNLOADING AUGER GUARD
GARANTS DE GOULOTTE DE VIDANGE HYDRAULIQUE
SCHUTZE-HYDRAULISCH SCHWENKBARES ENTLEERROHR
RIPARICOCLEA SCARICO IDRAULICA
CORAZAS DEL TUBO DE DESCARGA HIDRAULICO
SKYDD FOR HYDRAULISKT SVANGBAR TOMNINGSSKRUV

KEY	PART NO.	PART NAME	QTY	SERIAL NO.	975	9HY4	REMARKS
1	Z37821	GUARD	1		X	X	(SUB FOR Z34311)
2	Z37819	GUARD	1		X	X	(SUB FOR Z34312)
3	21M7243	WING SCREW	AR		X	X	M8 X 16
4	21M7081	SCREW	AR		X	X	M8 X 15
5	12M7008	LOCK WASHER	AR		X	X	8 MM
6	24M7036	WASHER	AR		X	X	9 MM
7	Z33525	HOLDER	2		X	X	
8	19M7297	CAP SCREW	2		X	X	M8 X 12
9	AZ27815	HOLDER	1	- 015187	X		(B)
10	Z38609	HOLDER	1	- 015187	X		(B)
11	Z38540	HOLDER	1	- 015187	X		(B)
12	Z38542	LIMIT CURTAIN	1	- 015187	X		(B)
13	21M7031	SCREW	8		X	X	M6 X 15
14	24M7088	WASHER	8		X	X	6,6 MM
15	12M7012	LOCK WASHER	8		X	X	6 MM
16	14M7027	NUT	8		X	X	M6
17	14M7166	LOCK NUT	8		X	X	M8
18	Z21066	PIN	1	- 003786	X		
19	Z21089	COVER	1	- 003786	X		
20	03M7094	BOLT	2	- 003786	X		M8 X 30
21	14M7029	NUT	2	- 003786	X		M8
22	Z39899	GUARD	1		X	X	(A)
23	Z37228	GUARD	1		X	X	(A)

(A) ONLY FOR LONG UNLOADING AUGER
SEULEMENT POUR GOULOTTE DE VIDANGE LONGUE
NUR FUER LANGES ENTLEERROHR
SOLTANTO PER COCLEA SVUOTAMENTO LUNGA
TAN SOLO PARA MANGA DE DESCARGA LARGA
ENDAST FOR LANG TOMNINGSSKRUV

(B) REINFORCED PARTS (FIELD CONVERSION)
PIECES RENFORCEES (MONTAGE-CHAMPS)
VERSTAERKUNGSTEILE (FELDUMBAU-PROGRAMM)
PARTI RINFORZATI (TRASFORMAZIONE SUL CAMPO)
PIEZAS REFORZADAS (CONVERSION EN EL CAMPO)
FORSTARKTA DELAR (OMBYGGNAD I FALT)

COPYRIGHT©1994 - 2008 DEERE & COMPANY Moline, Illinois All rights reserved

(4F20) HYDRAULIC SWIVEL UNLOADING AUGER
GOULOTTE DE VIDANGE HYDRAULIQUE
HYDRAULISCH SCHWENKBARES ENTLEERROHR
COCLEA DI SCARICO IDRAULICA RIBALTABILE
MANGA DE DESCARGA HIDRAULICA
HYDRAULISKT SVANGBAR TOMNINGSSKRUV

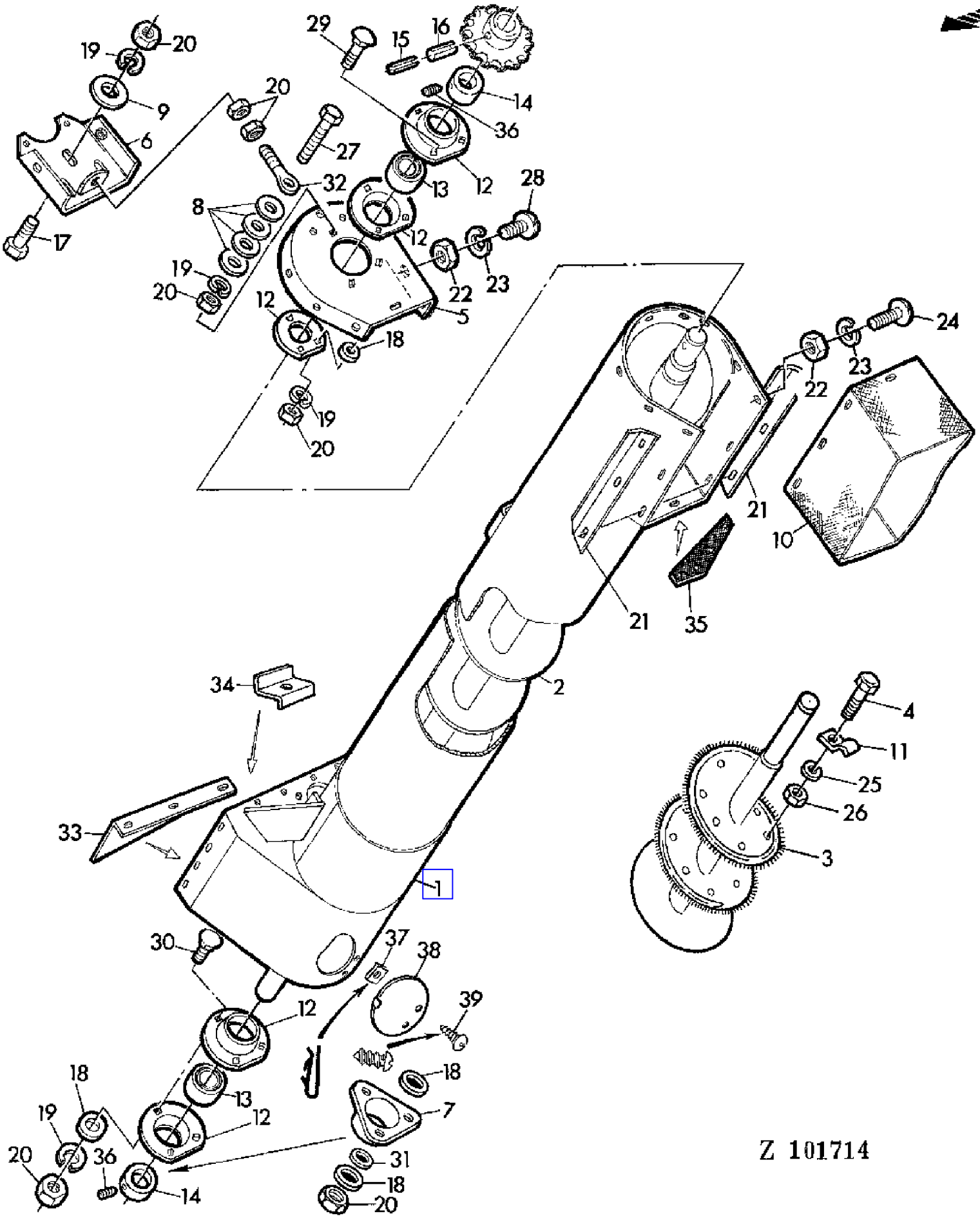

COPYRIGHT©1994 - 2008 DEERE & COMPANY Moline, Illinois All rights reserved

(4F20) HYDRAULIC SWIVEL UNLOADING AUGER
GOULOTTE DE VIDANGE HYDRAULIQUE
HYDRAULISCH SCHWENKBARES ENTLEERROHR
COCLEA DI SCARICO IDRAULICA RIBALTABILE
MANGA DE DESCARGA HIDRAULICA
HYDRAULISKT SVANGBAR TOMNINGSSKRUV

KEY	PART NO.	PART NAME	QTY	SERIAL NO.			975	975HY/4	REMARKS
1	AZ27835	SPOUT	1				X	X	(A) (SUB FOR AZ22556, AZ26792)
2	AZ21050	AUGER	1		-	015187	X		
	AZ36246	AUGER	1	015188	-		X	X	(ORD AZ38258, Z11817, (3) 24M3533, (6) 24M7302, 40M1831) (SUB FOR AZ26767)
3	AZ27913	BRUSH	1				X	X	
4	19M6614	CAP SCREW	AR				X	X	M6 X 12
5	Z32246	COVER	1		-	026172	X	X	
	Z38547	COVER	1	026173	-		X	X	
6	AZ22552	TIGHTENER	1		-	007451	X		(ORD AZ25101 W/ KEYS 41-44)
	AZ25101	TIGHTENER	1	007452	-		X	X	
7	Z38380	GUARD	1	006196	-		X	X	(SUB FOR Z35647)
8	24M7028	WASHER	AR	007452	-		X	X	10,5 MM
9	24M7178	WASHER	AR	007452	-		X	X	10,5 MM
10	Z32299	LIMIT CURTAIN	1		-	015187	X		
	Z37886	CANVAS	1	015188	-	026172	X	X	
	Z44800	LIMIT CURTAIN	1	026173	-		X	X	(SUB FOR Z38824)
11	Z38597	CLAMP	12				X	X	
12	Z38395	PRESSED FLANGED HOUSING	5				X	X	(SUB FOR P45502)
13	JD39103	BALL BEARING	2				X	X	
14	AZ10045	ECCENTRIC LOCKING COLLAR	2				X	X	INCL KEY 36
15	34M7043	SPRING PIN	1				X	X	6 X 45 MM
16	34M7070	SPRING PIN	1				X	X	10 X 45 MM
17	19M7166	CAP SCREW	AR				X	X	M10 X 20
18	24M7040	WASHER	AR				X	X	11 MM
19	12M7013	LOCK WASHER	AR				X	X	10 MM
20	14M7140	NUT	AR				X	X	M10
21	Z38417	REINFORCEMENT	2		-	026172	X	X	
	Z38539	REINFORCEMENT	2	026173	-		X	X	
22	14M7029	NUT	AR				X	X	M8
23	12M7008	LOCK WASHER	AR				X	X	8 MM
24	21M7160	SCREW	AR				X	X	M8 X 18
25	12M7012	LOCK WASHER	AR				X	X	6 MM
26	14M7027	NUT	AR				X	X	M6
27	19M7180	CAP SCREW	AR	007452	-		X	X	M10 X 45
28	21M7081	SCREW	AR				X	X	M8 X 15
29	03M7017	BOLT	AR				X	X	M10 X 25
30	03M7088	BOLT	6				X	X	M10 X 20
31	Z36140	WASHER	3				X	X	

(A) (-026172)ORD W/Z38824,2XZ38539,Z38547 AND WHEN REQD.ITEMS 37,38 AND 39
(-026172)COMMANDE AVEC W/Z38824,2XZ38539,Z38547 ET SUIVANT BESOIN PIEZES 37,38 ET 39
(-026172)ORD W/Z38824,2XZ38539,Z38547 UND NACH BEDARF POS.37,38,39
(-026172)ORD W/Z38824,2XZ38539,Z38547 E CASO DI BISOGNO,LE PART 37,38 E 39
(-026172)PEDIR W/Z38824,2XZ38539,Z38547 Y SEGUN DEMANDA,LAS PIEZAS 37,38 Y 39
(-026172)BESTALLAS MED Z38824,2XZ38539,Z38547 OCH DELAR 37,38,39 AV BEHOV

COPYRIGHT©1994 - 2008 DEERE & COMPANY Moline, Illinois All rights reserved

(4F20) HYDRAULIC SWIVEL UNLOADING AUGER
GOULOTTE DE VIDANGE HYDRAULIQUE
HYDRAULISCH SCHWENKBARES ENTLEERROHR
COCLEA DI SCARICO IDRAULICA RIBALTABILE
MANGA DE DESCARGA HIDRAULICA
HYDRAULISKT SVANGBAR TOMNINGSSKRUV

KEY	PART NO.	PART NAME	QTY	SERIAL NO.		975 HY/4	REMARKS
32	Z36681	EYEBOLT	AR	007452	-	X X	
33	Z33542	SHEET	1			X X	
34	Z35901	HOLDER	1			X X	(SUB FOR Z34872)
35	Z34986	GASKET	1			X X	
36	AZ19844	SET SCREW	2			X X	
37	Z20443	NUT	2	003787	-	X X	
38	Z22294	COVER	1	003787	-	X X	
39	37M7029	SCREW	2	003787	-	X X	M5,5 X 13

(A) (-026172)ORD W/Z38824,2XZ38539,Z38547 AND WHEN REQD.ITEMS 37,38 AND 39
(-026172)COMMANDE AVEC W/Z38824,2XZ38539,Z38547 ET SUIVANT BESOIN PIEZES 37,38 ET 39
(-026172)ORD W/Z38824,2XZ38539,Z38547 UND NACH BEDARF POS.37,38,39
(-026172)ORD W/Z38824,2XZ38539,Z38547 E CASO DI BISOGNO,LE PART 37,38 E 39
(-026172)PEDIR W/Z38824,2XZ38539,Z38547 Y SEGUN DEMANDA,LAS PIEZAS 37,38 Y 39
(-026172)BESTALLAS MED Z38824,2XZ38539,Z38547 OCH DELAR 37,38,39 AV BEHOV

COPYRIGHT©1994 - 2008 DEERE & COMPANY Moline, Illinois All rights reserved

(4F18) HYDRAULIC UNLOADING AUGER (LONG),DRIVE
ENTRAINEMENT DE GOULOTTE DE VIDANGE HYDRAULIQUE (LONGUE)
ANTRIEB DES HYDR.ENTLEERROHRES (LANG)
COMANDO COCLEA DI SCARICO LUNGA
TRANSMISION DE LA MANGA DE DESCARGA HIDRAULICA (LARGA)
LANG TOMNINGSSKRUVENS DRIVNING

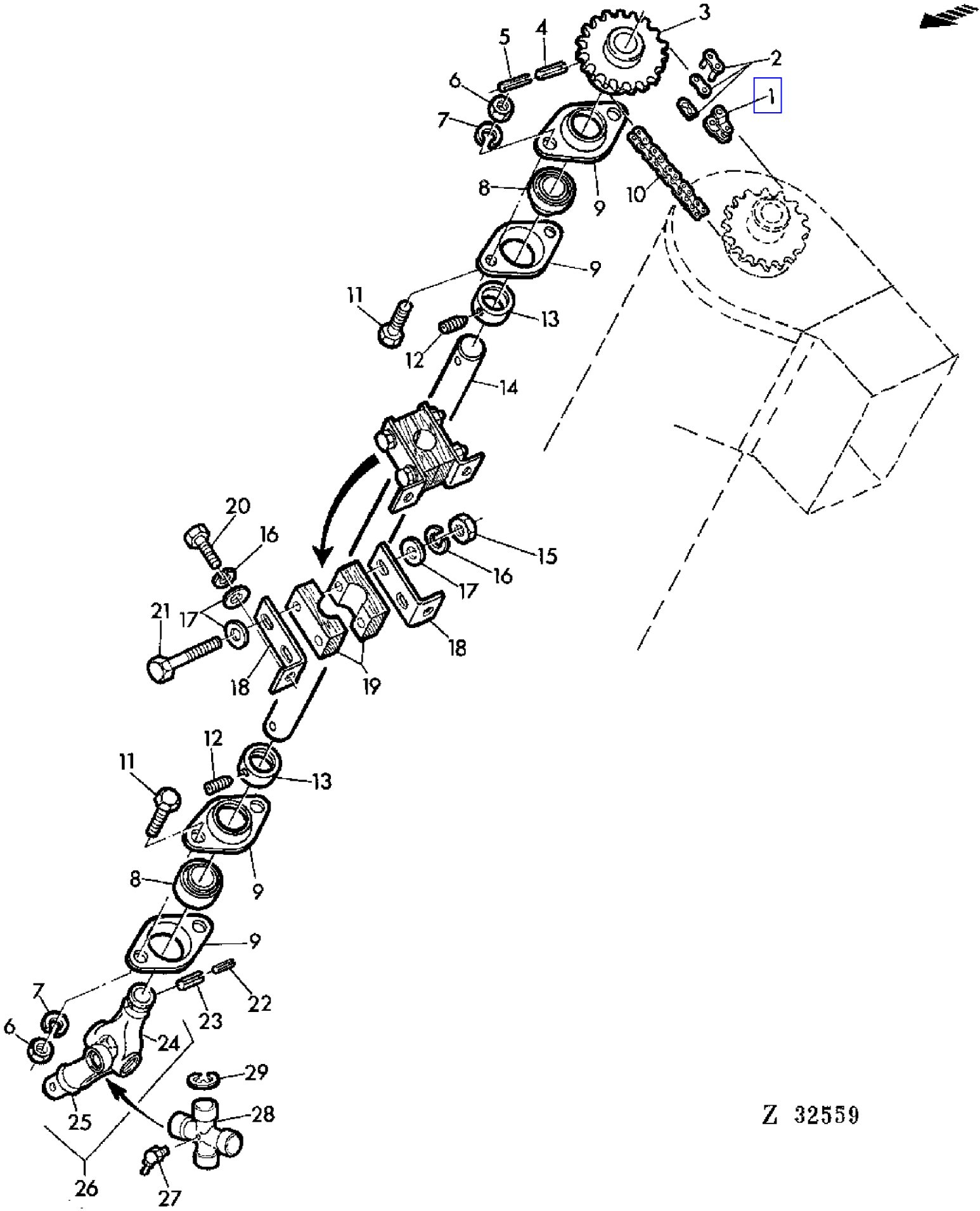

COPYRIGHT©1994 - 2008 DEERE & COMPANY Moline, Illinois All rights reserved

(4F18) HYDRAULIC UNLOADING AUGER (LONG),DRIVE
ENTRAINEMENT DE GOULOTTE DE VIDANGE HYDRAULIQUE (LONGUE)
ANTRIEB DES HYDR.ENTLEERROHRES (LANG)
COMANDO COCLEA DI SCARICO LUNGA
TRANSMISION DE LA MANGA DE DESCARGA HIDRAULICA (LARGA)
LANG TOMNINGSSKRUVENS DRIVNING

KEY	PART NO.	PART NAME	QTY	SERIAL NO.	975	975HY/4	REMARKS
1	AL14908	LINK	1		X	X	(FOR AZ32303)
	AZ36221	LINK	1		X	X	(FOR AZ36600)
2	AL14211	LINK	1		X	X	(FOR AZ32303)
	AZ36220	LINK	1		X	X	(FOR AZ36600)
3	Z11152	CHAIN SPROCKET	1		X	X	Z = 18
4	34M7070	SPRING PIN	1		X	X	10 X 45 MM
5	34M7043	SPRING PIN	1		X	X	6 X 45 MM
6	14M7140	NUT	AR		X	X	M10
7	12M7013	LOCK WASHER	AR		X	X	10 MM
8	JD39103	BALL BEARING	2		X	X	
9	Z30026	QUILL	4		X	X	
10	AZ26761	LINK CHAIN	1		X	X	L = 37, INCL KEYS 1,2
	AZ36600	ROLLER CHAIN	1		X	X	(A) Z = 36, INCL KEYS 1,2 (SUB FOR AZ32303)
11	19M7166	CAP SCREW	AR		X	X	M10 X 20
12	AZ19844	SET SCREW	2		X	X	KIT
13	AZ10045	ECCENTRIC LOCKING COLLAR	2		X	X	INCL KEY 12
14	Z37222	SHAFT	1		X	X	(ORD AZ38318, Z11683, Z48033, 34M7048, 34M7050)
15	14M7029	NUT	AR		X	X	M8
16	12M7008	LOCK WASHER	AR		X	X	8 MM
17	24M7036	WASHER	AR		X	X	9 MM
18	Z33525	HOLDER	4		X	X	
19	Z33527	BEARING	4		X	X	
20	19M7297	CAP SCREW	AR		X	X	M8 X 12
21	19M7270	CAP SCREW	AR		X	X	M8 X 65
22	34M7043	SPRING PIN	1		X	X	6 X 45 MM
23	34M7070	SPRING PIN	1		X	X	10 X 45 MM
24	Z11268	UNIVERSAL JOINT YOKE	1		X	X	(FOR AZ28867)
	Z11457	UNIVERSAL JOINT YOKE	1		X	X	(FOR AZ32225)
25	Z11269	UNIVERSAL JOINT YOKE	1		X	X	(FOR AZ28867)
	Z11456	UNIVERSAL JOINT YOKE	1		X	X	(FOR AZ32225)
26	AZ32225	UNIVERSAL JOINT	1		X	X	INCL KEYS 24,25,27-29 (SUB FOR AZ28867)
	AZ28867	UNIVERSAL JOINT	1	- 027877	X	X	INCL KEYS 24,25,27-29 (ORD AZ32225)
27	58M5577	LUBRICATION FITTING	1		X	X	(FOR AZ28867)
	58M7010	LUBRICATION FITTING	1		X	X	(FOR AZ32225)
28	AZ28866	SPIDER	1		X	X	(FOR AZ28867)
	AZ32226	SPIDER	1		X	X	(FOR AZ32225)
29	Z32725	SNAP RING	4		X	X	(FOR AZ28867)

(A) ONLY WITH UNLOADING PADDLE
UNIQUEMENT AVEC ROULEAU A PALETTES
NUR BEI PADDELWALZE
SOLO CON TAMBURO A PALETTE
SOLO CON TAMBOR DE PALETAS
ENDAST VID SKOVELAXEL

COPYRIGHT©1994 - 2008 DEERE & COMPANY Moline, Illinois All rights reserved

(4F18) HYDRAULIC UNLOADING AUGER (LONG),DRIVE
ENTRAINEMENT DE GOULOTTE DE VIDANGE HYDRAULIQUE (LONGUE)
ANTRIEB DES HYDR.ENTLEERROHRES (LANG)
COMANDO COCLEA DI SCARICO LUNGA
TRANSMISION DE LA MANGA DE DESCARGA HIDRAULICA (LARGA)
LANG TOMNINGSSKRUVENS DRIVNING

KEY	PART NO.	PART NAME	QTY	SERIAL NO.	975	975HY/4	REMARKS
	Z43195	SNAP RING	4		X	X	(FOR AZ32225)

(A) ONLY WITH UNLOADING PADDLE
UNIQUEMENT AVEC ROULEAU A PALETTES
NUR BEI PADDELWALZE
SOLO CON TAMBURO A PALETTE
SOLO CON TAMBOR DE PALETAS
ENDAST VID SKOVELAXEL

COPYRIGHT©1994 - 2008 DEERE & COMPANY Moline, Illinois All rights reserved

(4F16) HYDRAULIC UNLOADING AUGER DRIVE
ENTRAINEMENT DE GOULOTTE DE VIDANGE
ANTRIEB DES HYDR.ENTLEERROHRES
COMANDO COCLEA DI SCARICO
TRANSMISION DE LA MANGA DE DESCARGA HIDRAULICA
KORT TOMNINGSSKRUVENS DRIVNING

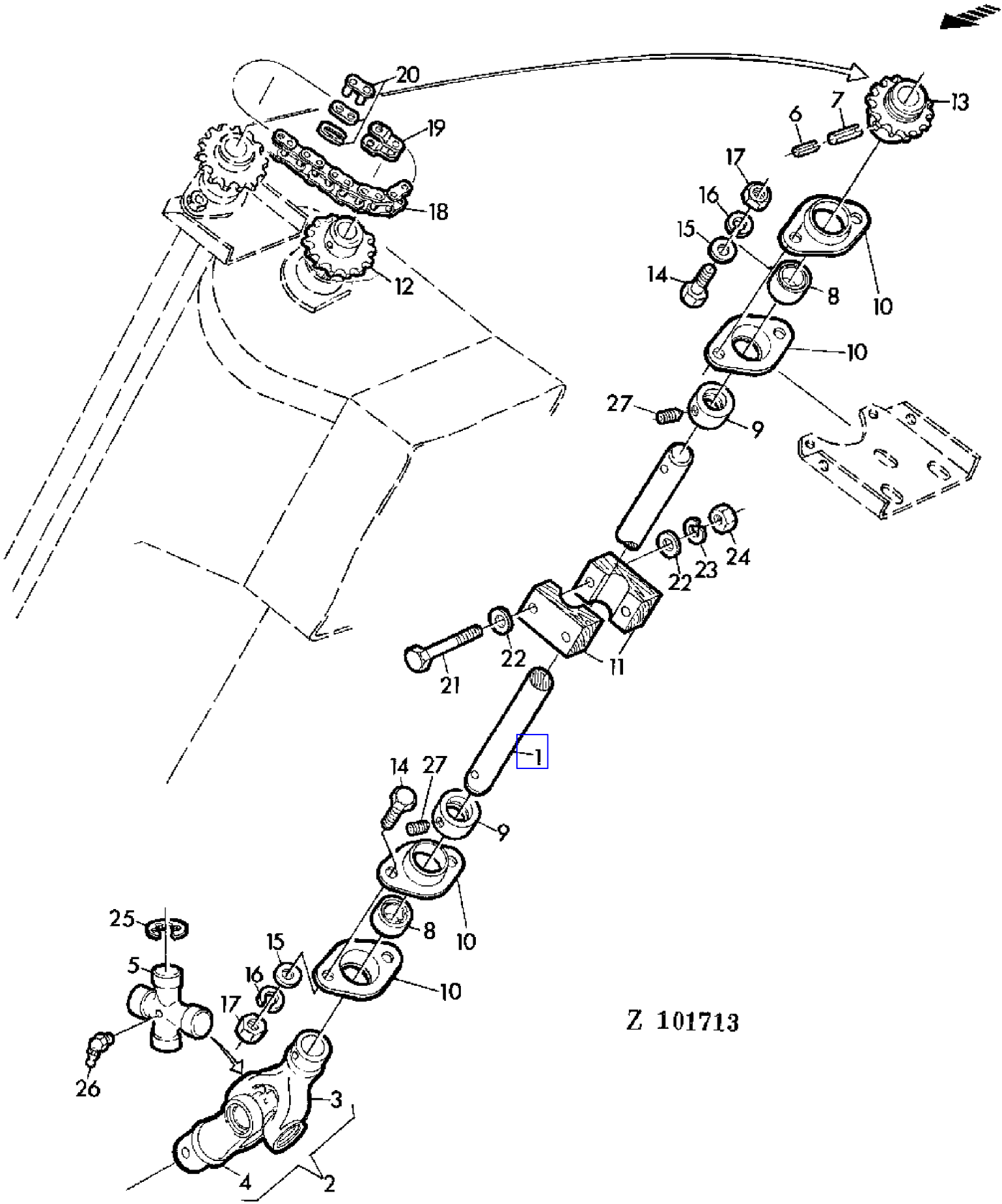

COPYRIGHT©1994 - 2008 DEERE & COMPANY Moline, Illinois All rights reserved

(4F16) HYDRAULIC UNLOADING AUGER DRIVE
ENTRAINEMENT DE GOULOTTE DE VIDANGE
ANTRIEB DES HYDR.ENTLEERROHRES
COMANDO COCLEA DI SCARICO
TRANSMISION DE LA MANGA DE DESCARGA HIDRAULICA
KORT TOMNINGSSKRUVENS DRIVNING

KEY	PART NO.	PART NAME	QTY	SERIAL NO.	975	975HY/4	REMARKS
1	Z33528	SHAFT	1		X	X	(ORD AZ38318, Z11683, Z48034, 34M7048, 34M7050)
2	AZ32225	UNIVERSAL JOINT	1		X	X	INCL KEYS 3-5,25,26 (SUB FOR AZ28867)
	AZ22438	UNIVERSAL JOINT	1	- 020422	X	X	INCL KEYS 3-5,25,26 (ORD AZ32225)
	AZ28867	UNIVERSAL JOINT	1	020423 - 027877	X	X	INCL KEYS 3-5,25,26 (ORD AZ32225)
3	Z11457	UNIVERSAL JOINT YOKE	1		X	X	(FOR AZ32225)
	Z10854	UNIVERSAL JOINT YOKE	1	- 020422	X	X	
	Z11268	UNIVERSAL JOINT YOKE	1	020423 - 027877	X	X	(FOR AZ28867)
4	Z11456	UNIVERSAL JOINT YOKE	1		X	X	(FOR AZ32225)
	Z10948	UNIVERSAL JOINT YOKE	1	- 020422	X	X	
	Z11269	UNIVERSAL JOINT YOKE	1	020423 - 027877	X	X	(FOR AZ28867)
5	AZ32226	SPIDER	1		X	X	(FOR AZ32225)
	AZ21542	SPIDER	1	- 020422	X	X	
	AZ28866	SPIDER	1	020423 - 027877	X	X	(FOR AZ28867)
6	34M7043	SPRING PIN	2		X	X	6 X 45 MM
7	34M7070	SPRING PIN	2		X	X	10 X 45 MM
8	JD39103	BALL BEARING	2		X	X	
9	AZ10045	ECCENTRIC LOCKING COLLAR	2		X	X	INCL KEY 27
10	Z30026	QUILL	4		X	X	
11	Z33527	BEARING	2		X	X	
12	Z11151	CHAIN SPROCKET	1		X	X	Z = 16 (SUB FOR Z37903)
	Z11434	CHAIN SPROCKET	1		X	X	(A) Z = 13
13	Z11152	CHAIN SPROCKET	1		X	X	Z = 18
14	19M7166	CAP SCREW	4		X	X	M10 X 20
15	24M7040	WASHER	4		X	X	11 MM
16	12M7013	LOCK WASHER	4		X	X	10 MM
17	14M7140	NUT	4		X	X	M10
18	AZ26761	LINK CHAIN	1		X	X	L = 37,INCL KEYS 19,20
	AZ36600	ROLLER CHAIN	1		X	X	(A) L = 36, INCL KEYS 19,20 (SUB FOR AZ32303)
19	AL14908	LINK	1		X		(FOR AZ32303)
	AZ36221	LINK	1		X	X	(FOR AZ36600)
	AZ12881	LINK	1		X		
20	AL14211	LINK	1		X	X	(FOR AZ32303)
	AZ36220	LINK	1		X	X	(FOR AZ36600)
21	19M7270	CAP SCREW	2		X	X	M8 X 65
22	24M7036	WASHER	4		X	X	9 MM
23	12M7008	LOCK WASHER	2		X	X	8 MM
24	14M7029	NUT	2		X	X	M8

(A) ONLY WITH UNLOADING PADDLE
UNIQUEMENT AVEC ROULEAU A PALETTES
NUR BEI PADDELWALZE
SOLO CON TAMBURO A PALETTE
SOLO CON TAMBOR DE PALETAS
ENDAST VID SKOVELAXEL

COPYRIGHT©1994 - 2008 DEERE & COMPANY Moline, Illinois All rights reserved

(4F16) HYDRAULIC UNLOADING AUGER DRIVE
ENTRAINEMENT DE GOULOTTE DE VIDANGE
ANTRIEB DES HYDR.ENTLEERROHRES
COMANDO COCLEA DI SCARICO
TRANSMISION DE LA MANGA DE DESCARGA HIDRAULICA
KORT TOMNINGSSKRUVENS DRIVNING

KEY	PART NO.	PART NAME	QTY	SERIAL NO.	975	975HY	REMARKS
25	Z43195	SNAP RING	4		X	X	(FOR AZ32225)
	Z32725	SNAP RING	AR	- 027877	X	X	(FOR AZ28867)
26	58M7010	LUBRICATION FITTING	1		X	X	(FOR AZ32225)
	58M5577	LUBRICATION FITTING	1	- 027877	X	X	(FOR AZ28867)
27	AZ19844	SET SCREW	2		X	X	KIT

(A) ONLY WITH UNLOADING PADDLE
UNIQUEMENT AVEC ROULEAU A PALETTES
NUR BEI PADDELWALZE
SOLO CON TAMBURO A PALETTE
SOLO CON TAMBOR DE PALETAS
ENDAST VID SKOVELAXEL

COPYRIGHT©1994 - 2008 DEERE & COMPANY Moline, Illinois All rights reserved

(2D02) HYDRAULIC-LINES(CUTTING PLATFORM)
CANALISATIONS HYDRAULIQUES(PLATE-FORME DE COUPE)
HYDRAULIKLEITUNGEN(SCHNEIDWERK)
LINEE IDRAULICHE(PIATTAFORMA DI TAGLIO)
TUBERIAS HIDRAULICAS(PLATAFORMA DE CORTE)
HYDRAULLEDNINGAR(SKARBORD)

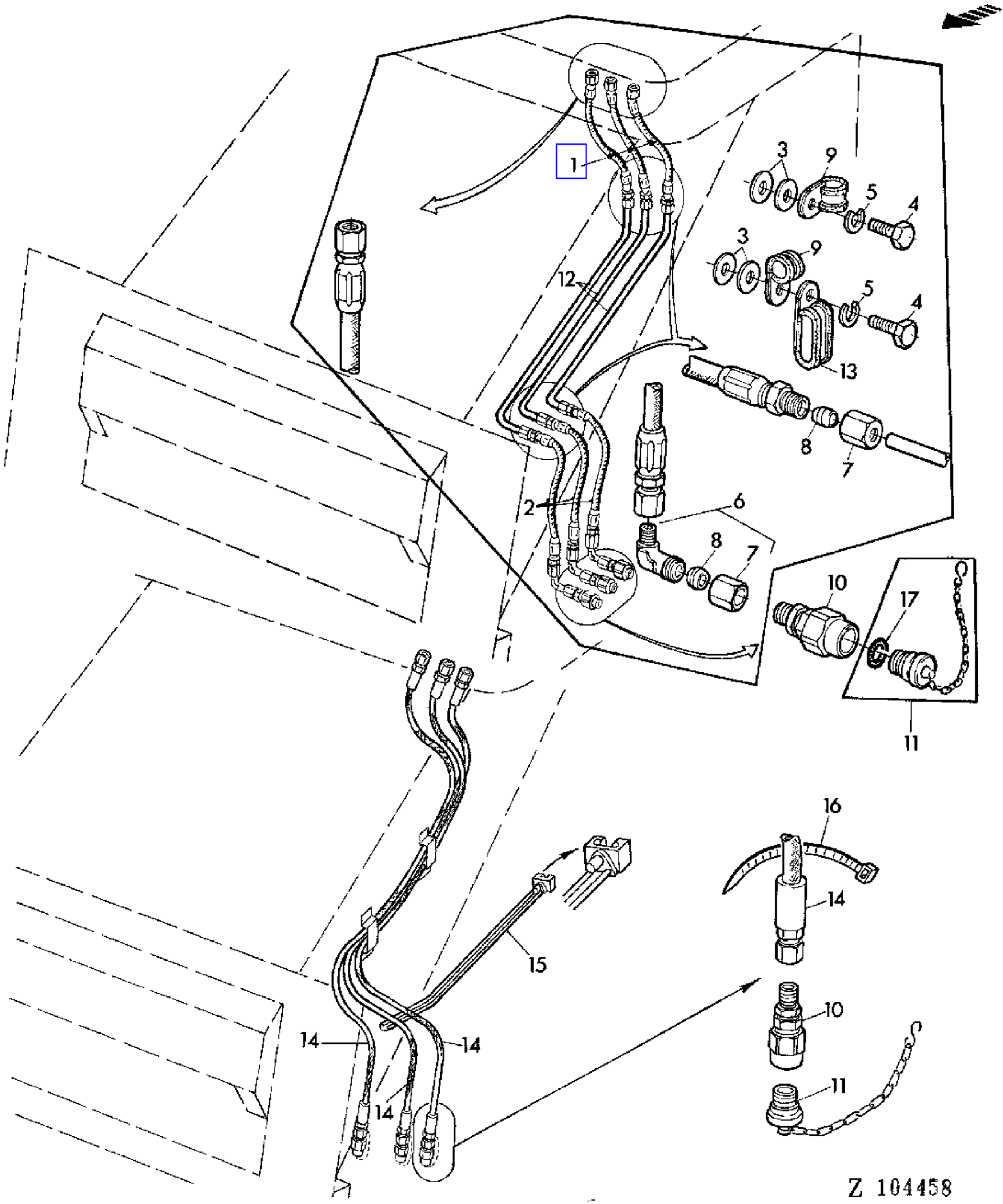

COPYRIGHT©1994 - 2008 DEERE & COMPANY Moline, Illinois All rights reserved

(2D02) HYDRAULIC-LINES(CUTTING PLATFORM)
CANALISATIONS HYDRAULIQUES(PLATE-FORME DE COUPE)
HYDRAULIKLEITUNGEN(SCHNEIDWERK)
LINEE IDRAULICHE(PIATTAFORMA DI TAGLIO)
TUBERIAS HIDRAULICAS(PLATAFORMA DE CORTE)
HYDRAULLEDNINGAR(SKARBORD)

KEY	PART NO.	PART NAME	QTY	SERIAL NO.	975	975HY	REMARKS
1	AZ24011	HYDRAULIC HOSE	3	- 010849	X		
2	AZ18454	HYDRAULIC HOSE	3	- 010849	X		
3	24M7054	WASHER	12		X		6,6 MM
4	19M7077	CAP SCREW	6		X		M6 X 20
5	12M7012	LOCK WASHER	6		X		6 MM
6	AZ21973	ELBOW FITTING	3	- 010849	X		INCL KEYS 7,8
7	Z32976	TUBE NUT	18	- 010849	X		
8	Z32996	SLEEVE FITTING	18	- 010849	X		
9	Z29820	CLAMP	4	- 010849	X		
10	AZ19455	EXTERNAL HALF COUPLER	3		X	X	
11	AZ19456	PLUG	3		X	X	
12	AZ22233	OIL LINE	3	- 010849	X		(A) INCL KEYS 7,8
	AZ22234	OIL LINE	3	- 010849	X		INCL KEYS 7,8
13	Z29819	CLAMP	2	- 010849	X		
14	AZ25300	HYDRAULIC HOSE	3		X	X	(A) LGTH = 2300 MM (SUB FOR AZ24677, AZ27563, AZ27564)
	AZ25301	HYDRAULIC HOSE	3		X	X	LGTH = 2000 MM (SUB FOR AZ24677, AZ27561, AZ27562)
15	Z34568	CLAMP	AR		X	X	(SUB FOR Z31798)
16	Z36392	TIE BAND	4	010850 -	X	X	
17	Z29863	O-RING	AR		X	X	

(A) FOR FEEDER CONVEYOR LONG
POUR CONVOYEUR D'ALIMENTATION LONG
FUER LANGEN SCHRAEGFOERDERER
PER COLLO ALIMENTATORE LUNGO
PARA ELEVADOR DE MIES LARGO
FOR INMATNINGSELEVATOR,LANG

COPYRIGHT©1994 - 2008 DEERE & COMPANY Moline, Illinois All rights reserved

(1G24) HYDROSTATIC MOTOR
MOTEUR HYDRAULIQUE
HYDROSTAT MOTOR
MOTORE IDROSTATICO
MOTOR HIDROSTATICO
HYDROSTATISKT MOTOR

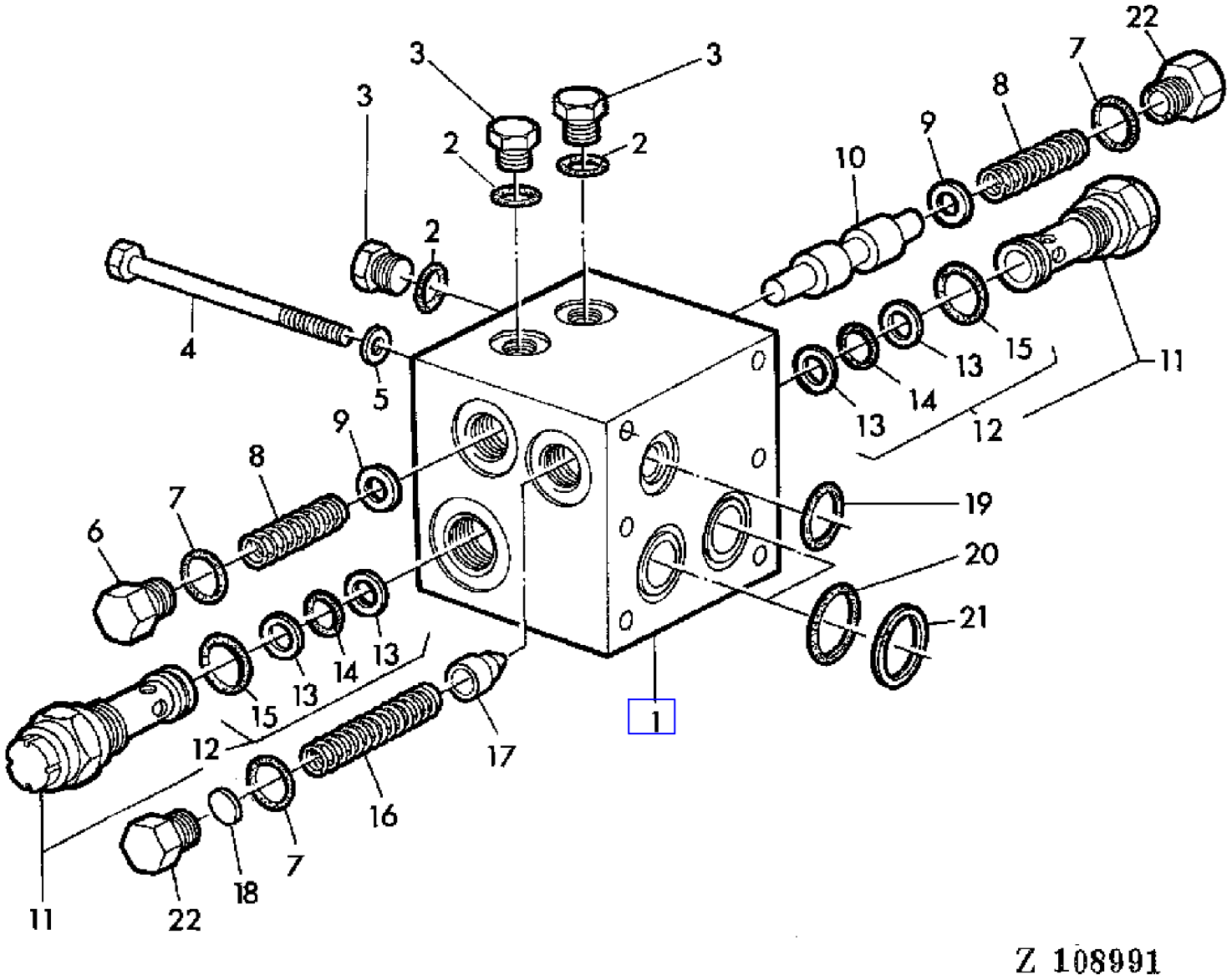

COPYRIGHT©1994 - 2008 DEERE & COMPANY Moline, Illinois All rights reserved

(1G24) HYDROSTATIC MOTOR
MOTEUR HYDRAULIQUE
HYDROSTAT MOTOR
MOTORE IDROSTATICO
MOTOR HIDROSTATICO
HYDROSTATISKT MOTOR

KEY	PART NO.	PART NAME	QTY	SERIAL NO.	975	975HY/4	REMARKS
1	AE31489	VALVE	1			X	ASSY
2	R28782	O-RING	3			X	
3	R51031	FITTING	3			X	(ORD W/ R28782) (SUB FOR AH63282)
4	19H1897	CAP SCREW	6			X	5/16" X 3-3/4"
5	24H1136	WASHER	AR			X	11/32" X 11/16" X .060"
6	H63221	FITTING	1			X	
7	R26906	O-RING	3			X	
8	H63285	SPRING	2			X	
9	H63287	WASHER	2			X	
10	.....	PISTON	1			X	NSEP (ORD AE31489)
11	AE31490	RELIEF VALVE	2			X	ASSY, INCL KEY 12
12	AH63292	KIT	2			X	INCL KEYS 13-15, KIT
13	H63288	RING	4			X	
14	H63289	O-RING	2			X	
15	U17409	O-RING	2			X	
16	H89241	SPRING	1			X	
17	H89242	PISTON	1			X	
18	T54908	SHIM	AR			X	
19	P42061	O-RING	1			X	
20	H35237	O-RING	2			X	
21	H63291	BACK-UP RING	2			X	
22	T54906	FITTING	2			X	
..	AH96662	KIT	1			X	KIT, INCL KEYS 2,12,19,20,21 (W/ H64829)

COPYRIGHT©1994 - 2008 DEERE & COMPANY Moline, Illinois All rights reserved

(1H02) HYDROSTATIC MOTOR
MOTEUR HYDRAULIQUE
HYDROSTAT MOTOR
MOTORE IDROSTATICO
MOTOR HIDROSTATICO
HYDROSTATISKT MOTOR

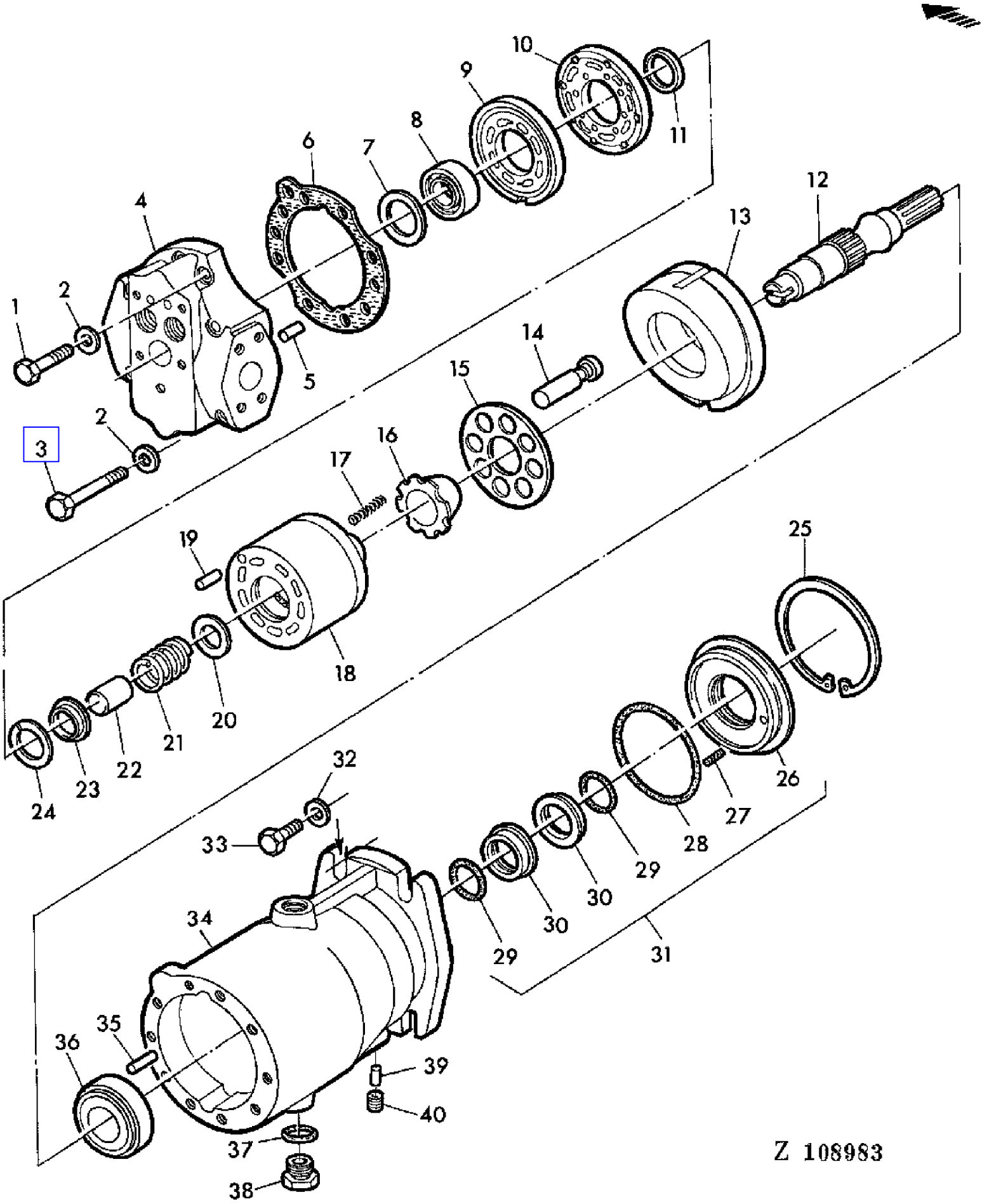

COPYRIGHT©1994 - 2008 DEERE & COMPANY Moline, Illinois All rights reserved

(1H02) HYDROSTATIC MOTOR
MOTEUR HYDRAULIQUE
HYDROSTAT MOTOR
MOTORE IDROSTATICO
MOTOR HIDROSTATICO
HYDROSTATISKT MOTOR

KEY	PART NO.	PART NAME	QTY	SERIAL NO.	975	975HY/4	REMARKS
1	19H2055	CAP SCREW	4			X	7/16 X 2-1/4"
2	24H1323	WASHER	8			X	15/32" X 13/16" X .090"
3	19H2444	CAP SCREW	4			X	7/16" X 3-1/4"
4	E52972	COVER	1			X	
5	H63271	PIN	1			X	
6	H64829	GASKET	1			X	
7	H81607	SHIM	2			X	0,25 MM, AR
8	AH65358	BEARING	1			X	
9	H64828	PLATE	1			X	
10	H122392	PLATE	1			X	(SUB FOR H109350, H64827)
11	.....	GASKET	1			X	NSEP (ORD AH118959)
12	H81605	SHAFT	1			X	
13	H64817	SWASH PLATE	1			X	
14	AH99347	KIT	3			X	PACKG (3)
15	.....	DISTRIBUTOR PLATE	1			X	NSEP (ORD AH118959)
16	.....	QUADRANT	1			X	NSEP (ORD AH118959)
17	H89093	SPRING	6			X	
18	.....	ROTOR	1			X	NSEP (ORD AH118959)
19	H63270	PIN	1			X	
20	.....	WASHER	1			X	NSEP (ORD AH118959)
21	.....	SPRING	1			X	NSEP (ORD AH118959)
22	.....	SPACER	1			X	NSEP (ORD AH118959)
23	.....	THRUST WASHER	1			X	NSEP (ORD AH118959)
24	.....	WASHER	1			X	NSEP (ORD AH118959)
25	H64809	SNAP RING	1			X	
26	.....	RING	1			X	NSEP (ORD AH118956)
27	H63243	SPRING	8			X	
28	H64810	O-RING	1			X	
29	H64811	O-RING	2			X	
30	.....	WASHER	2			X	NSEP (ORD AH118956)
31	AH118956	SEAL	1			X	INCL KEYS 26-30 (SUB FOR AH65354)
32	24H1111	WASHER	4			X	17/32" X 1-1/16"
33	19H1721	CAP SCREW	4			X	1/2" X 1-1/2"
34	H64812	HOUSING	1			X	
35	H63245	PIN	2			X	
36	AH65355	BEARING KIT	1			X	
37	R26906	O-RING	2			X	
38	R27474	DRAIN PLUG	2			X	
39	H64813	DOWEL PIN	1			X	
40	15H558	PIPE PLUG	1			X	
..	AE29476	MOTOR	1			X	ASSY, INCL KEYS 1-31,34-40
..	AH96662	KIT	1			X	KIT (INCL KEY 6, AH63292) (SUB FOR AH80067)

COPYRIGHT©1994 - 2008 DEERE & COMPANY Moline, Illinois All rights reserved

(1H02) HYDROSTATIC MOTOR
MOTEUR HYDRAULIQUE
HYDROSTAT MOTOR
MOTORE IDROSTATICO
MOTOR HIDROSTATICO
HYDROSTATISKT MOTOR

KEY	PART NO.	PART NAME	QTY	SERIAL NO.	975	975HY/4	REMARKS
..	AH118959	KIT	1			X	INCL KEYS 10,11,14-24 (SUB FOR AH110890, AH96669)

COPYRIGHT©1994 - 2008 DEERE & COMPANY Moline, Illinois All rights reserved

(1G14) HYDROSTATIC PUMP
POMPE HYDRAULIQUE
HYDROSTAT-PUMPE
POMPA IDROSTATICA
BOMBA HIDROSTATICA
HYDROSTATISKT PUMP

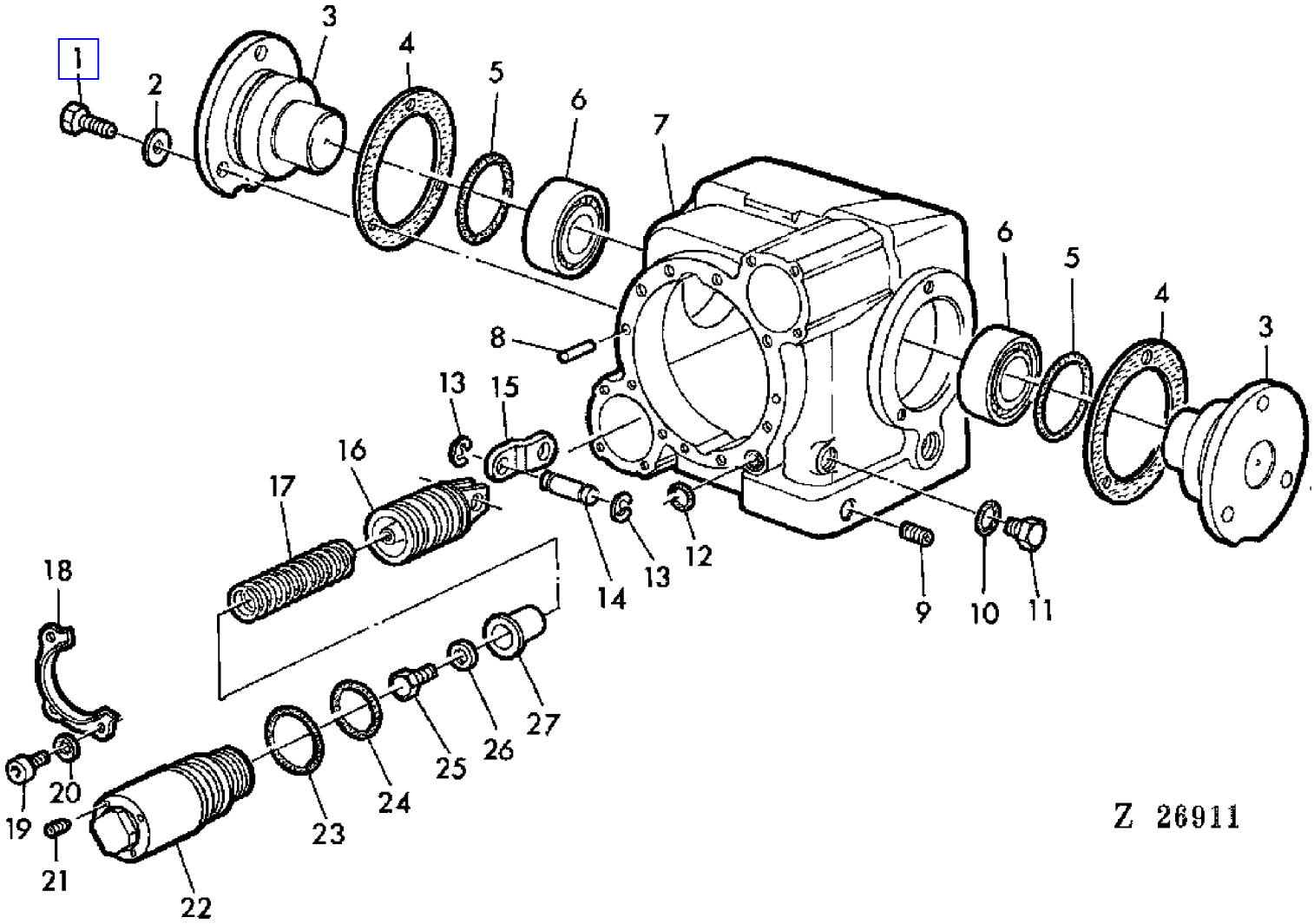

COPYRIGHT©1994 - 2008 DEERE & COMPANY Moline, Illinois All rights reserved

(1G14) HYDROSTATIC PUMP
POMPE HYDRAULIQUE
HYDROSTAT-PUMPE
POMPA IDROSTATICA
BOMBA HIDROSTATICA
HYDROSTATISKT PUMP

KEY	PART NO.	PART NAME	QTY	SERIAL NO.	975	975HY/4	REMARKS
1	19H1936	CAP SCREW	6			X	3/8" X 3/4"
2	24H1303	WASHER	6			X	13/32" X 11/16" X .060"
3	H63284	TRUNNION	2			X	
4	AT64281	KIT	2			X	(SUB FOR AH63289)
5	U12198	O-RING	2			X	
6	AT52821	KIT	2			X	
7	H63253	HOUSING	1			X	
8	H63245	PIN	4			X	
9	15H558	PIPE PLUG	1			X	1/8"
10	R28782	O-RING	1			X	
11	R51031	FITTING	1			X	(ORD W/ R28782) (SUB FOR AH63282)
12	H81608	O-RING	1			X	
13	A11318	SNAP RING	8			X	
14	H63255	SPRING PIN	4			X	
15	H63256	LINK	2			X	
16	.....	HOUSING	2			X	NSEP (ORD AH118960)
17	H83936	SPRING	2			X	
18	H63264	RETAINER	2			X	
19	21H1300	SCREW	6			X	NO.10 X 3/8"
20	12H295	LOCK WASHER	6			X	3/16"
21	15H560	PIPE PLUG	4			X	1/16"
22	AH118957	SLEEVE	2			X	(SUB FOR AH80068)
23	H63262	O-RING	2			X	
24	H63261	O-RING	2			X	
25	19H1227	CAP SCREW	2			X	1/4" X 1/2"
26	H63260	WASHER	2			X	
27	H63259	GUIDE	2			X	
..	AH118960	PISTON	1			X	INCL KEYS 13-17,25-27

COPYRIGHT©1994 - 2008 DEERE & COMPANY Moline, Illinois All rights reserved

(1G16) HYDROSTATIC PUMP
POMPE HYDRAULIQUE
HYDROSTAT-PUMPE
POMPA IDROSTATICA
BOMBA HIDROSTATICA
HYDROSTATISKT PUMP

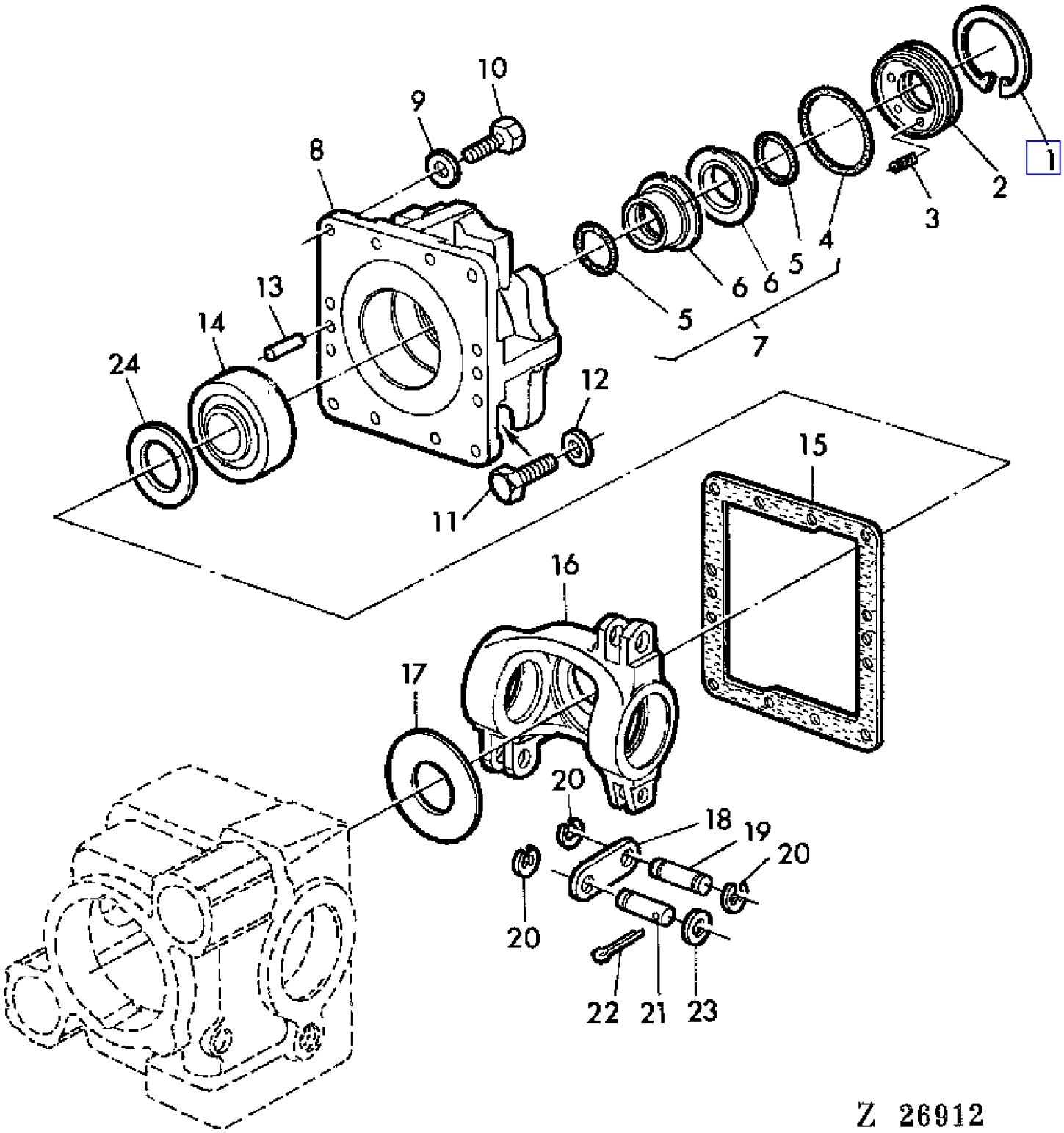

COPYRIGHT©1994 - 2008 DEERE & COMPANY Moline, Illinois All rights reserved

(1G16) HYDROSTATIC PUMP
POMPE HYDRAULIQUE
HYDROSTAT-PUMPE
POMPA IDROSTATICA
BOMBA HIDROSTATICA
HYDROSTATISKT PUMP

KEY	PART NO.	PART NAME	QTY	SERIAL NO.	975	975HY/4	REMARKS
1	H63242	SNAP RING	1			X	
2	AH63279	RETAINER	1			X	
3	H63243	SPRING	6			X	
4	M4237T	O-RING	1			X	
5	U15973	O-RING	2			X	
6	.....	O-RING	2			X	NSEP (ORD AT52822)
7	AT52822	SEAL KIT	1			X	INCL KEYS 4-6
8	H63244	COVER	1			X	
9	24H1303	WASHER	12			X	13/32" X 11/16" X .060"
10	19H1732	CAP SCREW	12			X	3/8" X 11/4"
11	19H1721	CAP SCREW	4			X	1/2" X 1-1/2"
12	24H1111	WASHER	4			X	17/32" X 1-1/16" X .090"
13	H63245	PIN	4			X	
14	AT52823	ROLLER BEARING	1			X	
15	H63246	GASKET	1			X	
16	H63247	SWASH PLATE	1			X	
17	H63251	THRUST WASHER	1			X	
18	H63248	STRAP	1			X	
19	H63249	SPRING PIN	1			X	
20	H89092	SNAP RING	3			X	
21	H81619	PIN	1			X	
22	11H231	COTTER PIN	1			X	1/6" X 1"
23	24H1287	WASHER	1			X	9/32" X 5/8" X .060"
24	T53332	SHIM	1			X	0.010" (0,254 MM) AR

COPYRIGHT©1994 - 2008 DEERE & COMPANY Moline, Illinois All rights reserved

(1G18) HYDROSTATIC PUMP
POMPE HYDRAULIQUE
HYDROSTAT PUMPE
POMPA IDROSTATICA
BOMBA HIDROSTATICA
HYDROSTATISKT PUMP

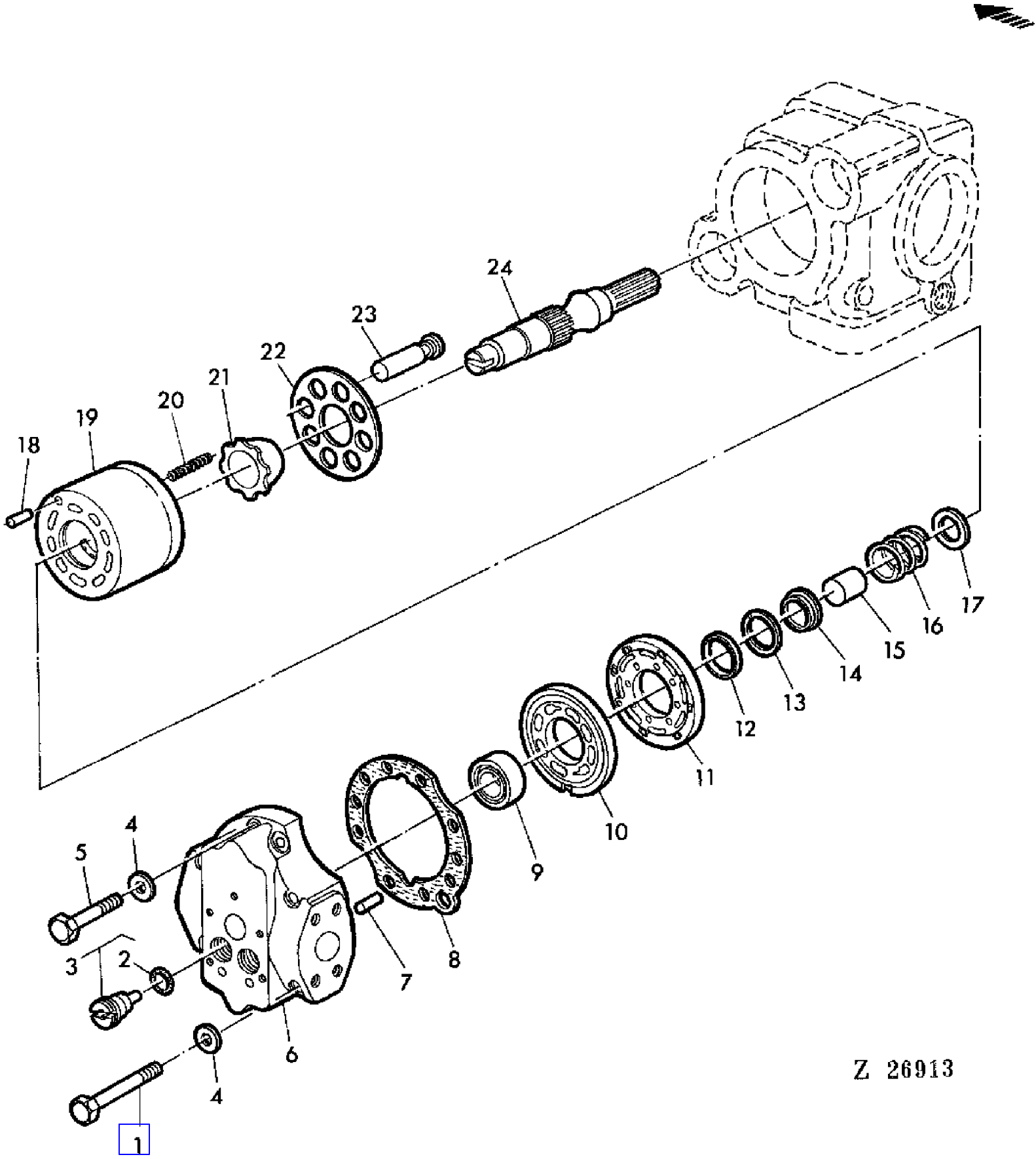

COPYRIGHT©1994 - 2008 DEERE & COMPANY Moline, Illinois All rights reserved

(1G18) HYDROSTATIC PUMP
POMPE HYDRAULIQUE
HYDROSTAT PUMPE
POMPA IDROSTATICA
BOMBA HIDROSTATICA
HYDROSTATISKT PUMP

KEY	PART NO.	PART NAME	QTY	SERIAL NO.	975	975HY/4	REMARKS
1	19H2128	CAP SCREW	5			X	3/8" X 3"
2	H63283	O-RING	2			X	
3	AH63288	CHECK VALVE	2			X	
4	24H1303	WASHER	8			X	13/32" X 11/16" X .060"
5	19H1801	CAP SCREW	3			X	3/8" X 2"
6	H63282	CAP	1			X	
7	H63271	PIN	1			X	
8	H63281	GASKET	1			X	
9	AT52818	BEARING	1			X	
10	T54917	PLATE	1			X	
11	H63278	PLATE	1			X	
12	H63277	RING	1			X	
13	H63276	SNAP RING	1			X	
14	H63275	WASHER	1			X	
15	H63274	BUSHING	1			X	
16	H83962	SPRING	1			X	
17	H63272	WASHER	1			X	
18	H63270	PIN	1			X	
19	AT52189	CYLINDER BLOCK	1			X	
20	T54193	SPRING	6			X	
21	H63268	GUIDE	1			X	
22	H63266	RETAINER	1			X	
23	AH99346	PISTON	3			X	PACKG (3)
24	H63265	SHAFT	1			X	

COPYRIGHT©1994 - 2008 DEERE & COMPANY Moline, Illinois All rights reserved

(1G20) HYDROSTATIC PUMP
POMPE HYDRAULIQUE
HYDROSTAT PUMPE
POMPA IDROSTATICA
BOMBA HIDROSTATICA
HYDROSTATISKT PUMP

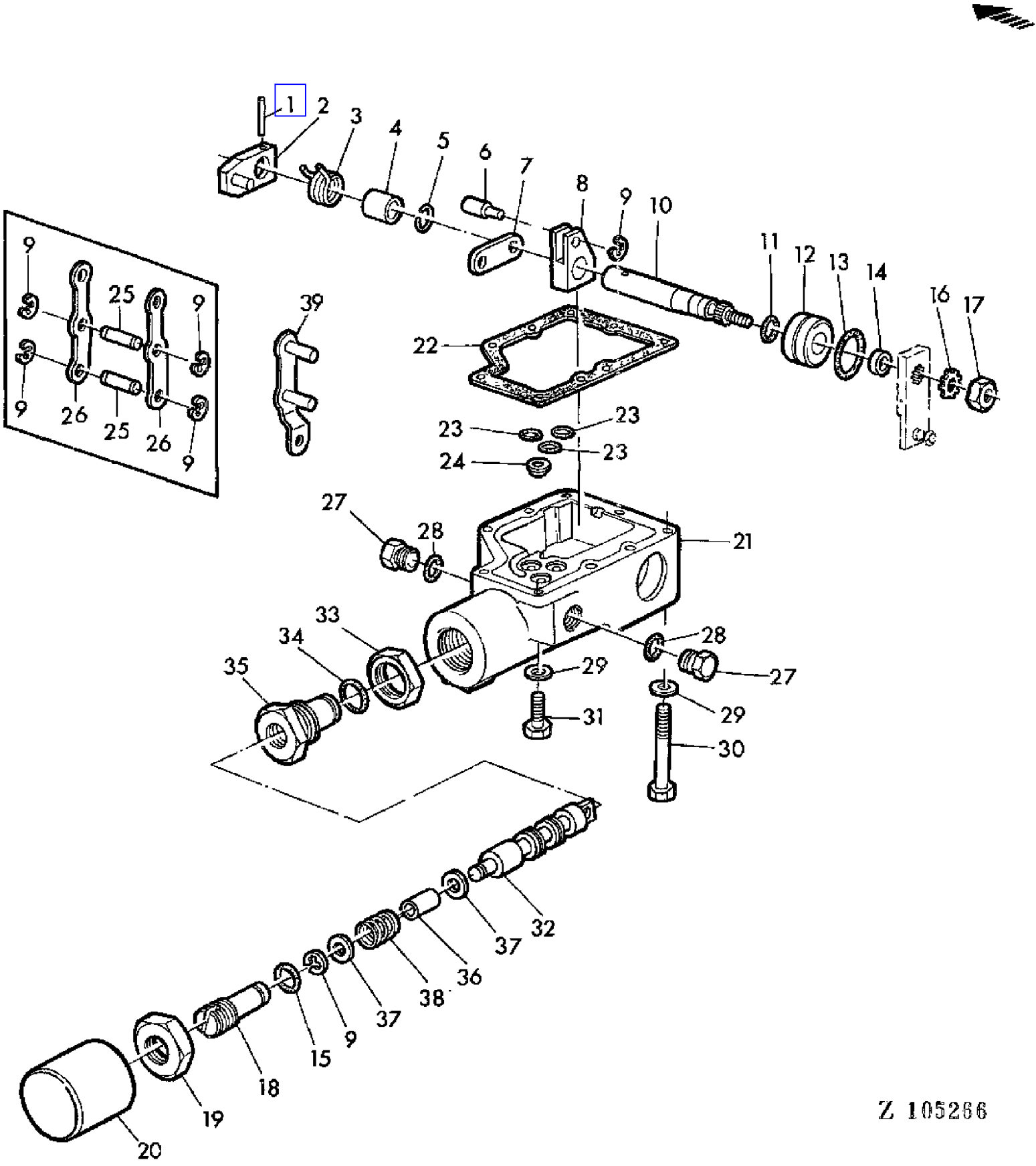

COPYRIGHT©1994 - 2008 DEERE & COMPANY Moline, Illinois All rights reserved

(1G20) HYDROSTATIC PUMP
POMPE HYDRAULIQUE
HYDROSTAT PUMPE
POMPA IDROSTATICA
BOMBA HIDROSTATICA
HYDROSTATISKT PUMP

KEY	PART NO.	PART NAME	QTY	SERIAL NO.	975	975HY/4	REMARKS
1	34H251	SPRING PIN	1			X	1/8" X 1"
2	.....	SUPPORT	1			X	NSEP (ORD AH80069)
3	.....	SPRING	1			X	NSEP (ORD AH80069)
4	.....	SPACER	1			X	NSEP (ORD AH80069)
5	H63237	SNAP RING	1			X	
6	.....	PIN	1			X	NSEP (ORD AH80069)
7	.....	STRAP	1			X	NSEP (ORD AH80069)
8	.....	HOLDER	1			X	NSEP (ORD AH80069)
9	R30828	SNAP RING	6			X	
10	H63231	SHAFT	1			X	
11	A3917R	O-RING	1			X	
12	H81628	BUSHING	1			X	
13	U15242	O-RING	1			X	
14	T53331	WASHER	1			X	
15	R28776	O-RING	1			X	
16	12H297	LOCK WASHER	1			X	1/4"
17	14H850	NUT	1			X	1/4"
18	H63223	SCREW	1			X	
19	14H904	NUT	1			X	3/4"
20	H81629	CAP	1			X	
21	.....	CASE	1			X	NSEP (ORD AH80069)
22	H63222	GASKET	1			X	
23	H81608	O-RING	3			X	
24	H81609	ORIFICE	1			X	
25	H63235	PIN	2			X	(ORD AE44988)
26	H63236	LINK	2			X	(ORD AE44988)
27	R51031	FITTING	2			X	(ORD W/ R28782) (SUB FOR AH63282)
28	R28782	O-RING	2			X	
29	24H1286	WASHER	9			X	9/32" X 1/2" X .060"
30	19H2333	CAP SCREW	7			X	1/4" X 2-1/4"
31	19H2102	CAP SCREW	2			X	1/4" X 1-3/4"
32	.....	VALVE SPOOL	1			X	NSEP (ORD AH80069)
33	H63228	LOCK NUT	1			X	
34	U15980	O-RING	1			X	
35	H63227	HOUSING	1			X	
36	H63229	WASHER	1			X	
37	H63225	WASHER	2			X	
38	H63226	SPRING	1			X	
39	AE44988	LINK	1			X	(SUB FOR H63236)
..	AH80069	CONTROL	1			X	ASSY, INCL KEYS 1-21,25-28,32-38

COPYRIGHT©1994 - 2008 DEERE & COMPANY Moline, Illinois All rights reserved

(1G12) HYDROSTATIC PUMP ASSY.
POMPE HYDRAULIQUE COMPLETE
HYDROSTAT-PUMPE,KOMPLETT
POMPA IDROSTATICA,COMPLETA
BOMBA HIDROSTATICA,COMPLETA
HYDROSTATISKT PUMP,HELT

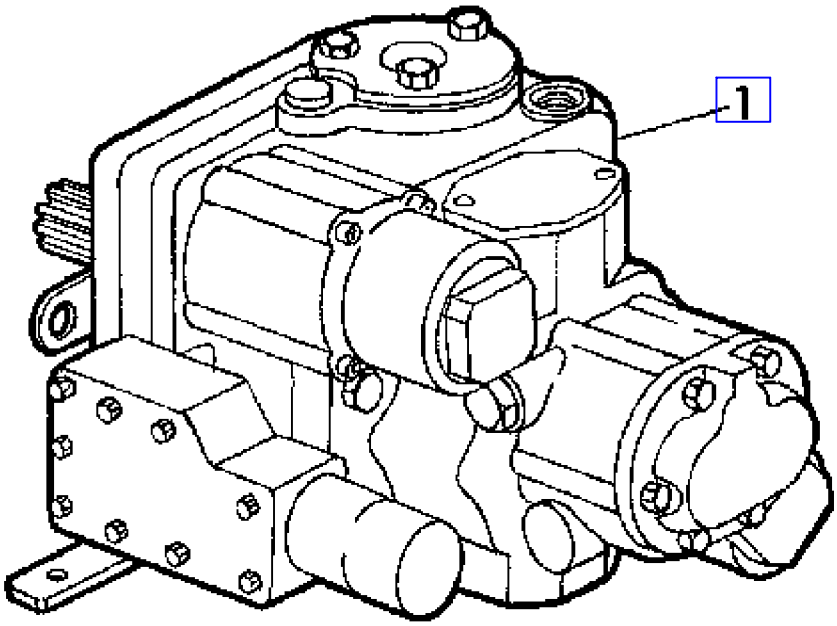

Z 26910

COPYRIGHT©1994 - 2008 DEERE & COMPANY Moline, Illinois All rights reserved

(1G12) HYDROSTATIC PUMP ASSY.
POMPE HYDRAULIQUE COMPLETE
HYDROSTAT-PUMPE,KOMPLETT
POMPA IDROSTATICA,COMPLETA
BOMBA HIDROSTATICA,COMPLETA
HYDROSTATISKT PUMP,HELT

KEY	PART NO.	PART NAME	QTY	SERIAL NO.	975	975HY/4	REMARKS
1	AH63271	HYDRAULIC PUMP	1			X	

COPYRIGHT©1994 - 2008 DEERE & COMPANY Moline, Illinois All rights reserved

(1H04) HYDROSTATIC PUMP BRACKET
SUPPORT
HALTERUNG
SUPPORTO POMPA IDROSTATICA
SOPORTE DE LA BOMBA HIDROSTATICA
HYDROSTATISKT PUMPENS STOD

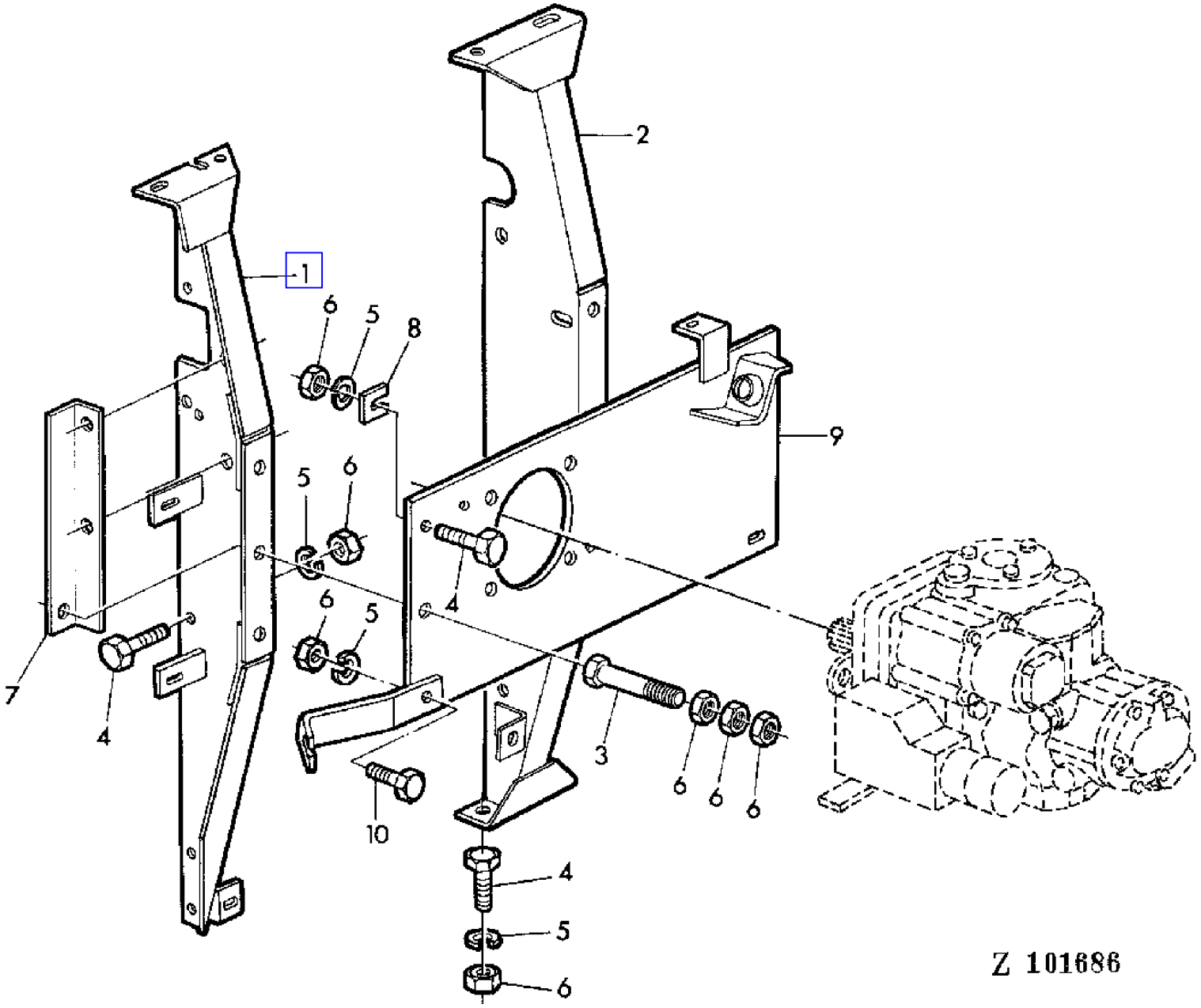

COPYRIGHT©1994 - 2008 DEERE & COMPANY Moline, Illinois All rights reserved

(1H04) HYDROSTATIC PUMP BRACKET
SUPPORT
HALTERUNG
SUPPORTO POMPA IDROSTATICA
SOPORTE DE LA BOMBA HIDROSTATICA
HYDROSTATISKT PUMPENS STOD

KEY	PART NO.	PART NAME	QTY	SERIAL NO.			975	975HY/4	REMARKS
1	AZ28520	SUPPORT	1		-	033562		X	(ORD AZ32542)
	AZ32556	SUPPORT	1	033563	-			X	
2	AZ28070	HOLDER	1		-	033562		X	(ORD AZ32542)
	AZ32557	SUPPORT	1	033563	-			X	
3	19M7497	CAP SCREW	1	033563	-			X	M10 X 110
4	19M7169	CAP SCREW	AR					X	M10 X 35
5	12M7013	LOCK WASHER	AR					X	10 MM
6	14M7140	NUT	AR					X	M10
7	Z42628	ANGLE	1	033563	-			X	
8	Z22027	STRAP	AR	033563	-			X	
9	AZ28519	HOLDER	1		-	033562		X	(ORD AZ32555)
	AZ32555	SUPPORT	1	033563	-			X	
10	19M7168	CAP SCREW	AR					X	M10 X 30
..	AZ32542	SUPPORT	1		-	033562		X	(INCL KEYS 1-8, Z11444, (4) 24M3533, (2) 24M7106)

COPYRIGHT©1994 - 2008 DEERE & COMPANY Moline, Illinois All rights reserved

(1H06) HYDROSTATIC PUMP DRIVE
ENTRAINEMENT DE POMPE
HYDROSTAT PUMPENANTRIEB
COMANDO DELLA POMPA IDROSTATICA
TRANSMISION DE LA BOMBA HIDROSTATICA
HYDROSTATISKT PUMPENS DRIVNING

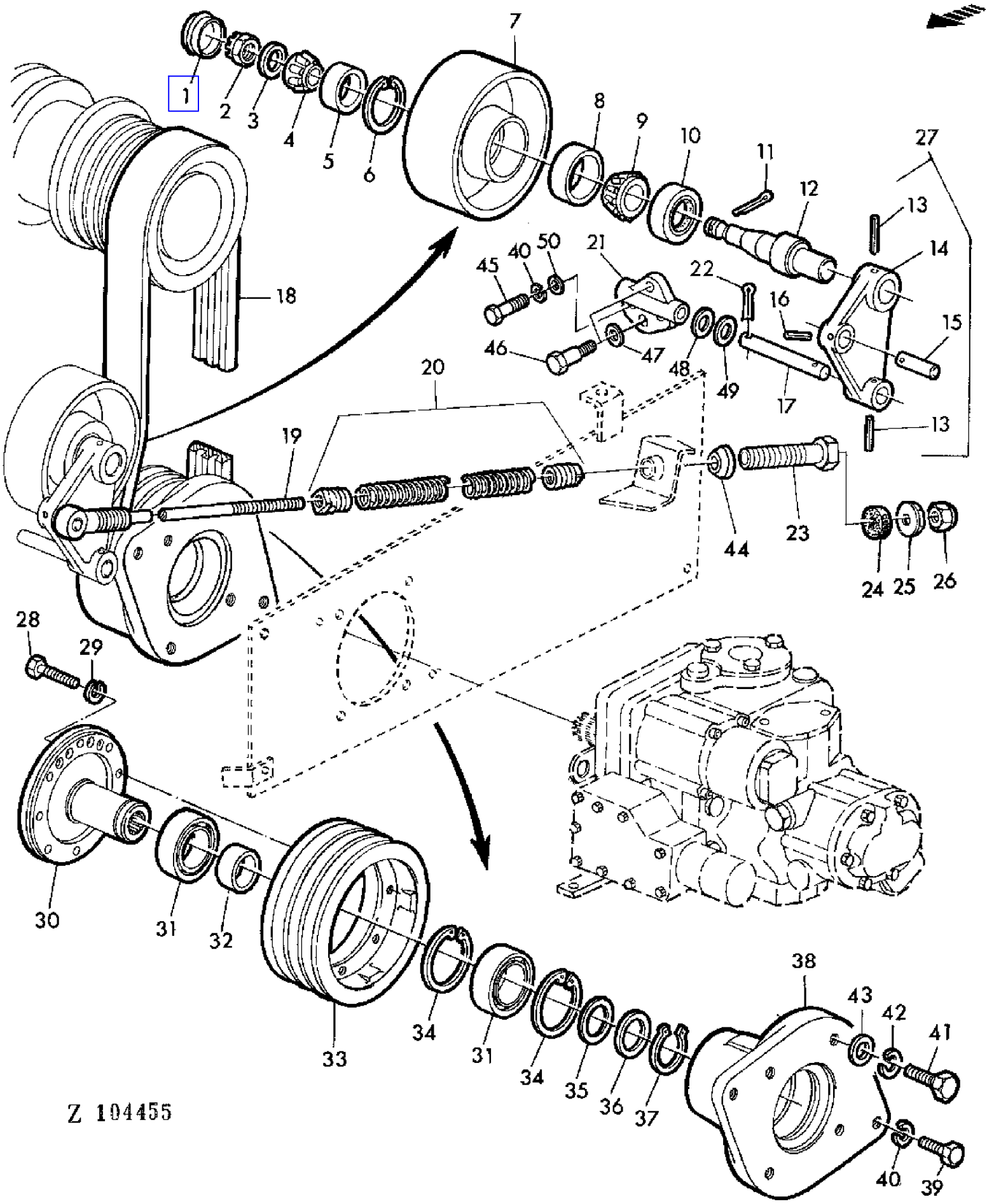

COPYRIGHT©1994 - 2008 DEERE & COMPANY Moline, Illinois All rights reserved

(1H06) HYDROSTATIC PUMP DRIVE
ENTRAINEMENT DE POMPE
HYDROSTAT PUMPENANTRIEB
COMANDO DELLA POMPA IDROSTATICA
TRANSMISION DE LA BOMBA HIDROSTATICA
HYDROSTATISKT PUMPENS DRIVNING

KEY	PART NO.	PART NAME	QTY	SERIAL NO.	975	975HY/4	REMARKS
1	Z9769H	CAP	1			X	
2	14M7179	NUT	AR			X	M16
3	24M7053	WASHER	AR			X	17 MM
4	JD8188	BEARING CONE	1			X	
5	JD8226	BEARING CUP	1			X	
6	40M1862	SNAP RING	1			X	45 X 1,75 MM
7	Z11141	IDLER	1			X	
8	JD8225	BEARING CUP	1			X	
9	JD8187	BEARING CONE	1			X	
10	AZ12215	SEAL	1			X	
11	11M7012	COTTER PIN	1			X	3,2 X 16 MM
12	Z37503	SHAFT	1			X	
13	34M7036	SPRING PIN	1			X	5 X 45 MM
14	Z11142	LEVER	1			X	
15	Z20860	PIN	1			X	
16	34M7035	SPRING PIN	1			X	5 X 40 MM (SUB FOR 34M7026)
17	Z38779	PIN	1			X	
18	Z41728	BELT	1			X	(SUB FOR Z37476)
19	Z37487	EYEBOLT	1			X	
20	AZ27446	EXTENSION SPRING	1			X	ASSY
21	Z11229	COMMUTATOR HOUSING	1	- 033562		X	(ORD Z11444)
	Z11444	HOUSING	1	033563 -		X	
22	11M7031	COTTER PIN	AR			X	5 X 45 MM
23	Z37679	CAP SCREW	1			X	
24	Z35271	BUSHING	1			X	
25	AZ28125	NUT	AR			X	
26	14M7168	LOCK NUT	AR			X	12 MM
27	AZ26404	PIVOT	1			X	ASSY, INCL KEYS 12-17
28	19M7288	CAP SCREW	8			X	M8 X 30
29	12M7008	LOCK WASHER	AR			X	8 MM
30	Z11480	FLANGE	1			X	(SUB FOR Z11137)
31	JD8548	BALL BEARING	2			X	
32	Z37499	SPACER	1			X	
33	Z11139	PULLEY	1			X	
34	40M5427	SNAP RING	2			X	110 X 4 MM
35	24M7215	SHIM	AR			X	60 X 75 X 0,1 MM
	24M7214	SHIM	AR			X	60 X 75 X 0,5 MM
36	24M7173	WASHER	AR			X	60 X 75 X 3 MM
37	40M1843	SNAP RING	1			X	60 X 2 MM
38	Z11138	QUILL	1			X	
39	19M7166	CAP SCREW	AR			X	M10 X 20
40	12M7013	LOCK WASHER	AR			X	10 MM

COPYRIGHT©1994 - 2008 DEERE & COMPANY Moline, Illinois All rights reserved

(1H06) HYDROSTATIC PUMP DRIVE
ENTRAINEMENT DE POMPE
HYDROSTAT PUMPENANTRIEB
COMANDO DELLA POMPA IDROSTATICA
TRANSMISION DE LA BOMBA HIDROSTATICA
HYDROSTATISKT PUMPENS DRIVNING

KEY	PART NO.	PART NAME	QTY	SERIAL NO.		975	975HY/4	REMARKS
41	19M7335	CAP SCREW	AR				X	M14 X 45
42	12M7009	LOCK WASHER	AR				X	14 MM
43	24M7085	WASHER	AR				X	15 MM
44	47M7005	WASHER	1				X	
45	19M7380	CAP SCREW	2				X	M10 X 22
46	53M7005	SCREW	2				X	12 X 35 MM
47	24M1607	WASHER	1				X	14 MM
48	24M3533	WASHER	AR	033563	-		X	30 X 42 X 2 MM
49	24M7199	SHIM	AR	033563	-		X	30 X 42 X 0,5 MM
50	24M7106	WASHER	2	033563	-		X	10 MM

COPYRIGHT©1994 - 2008 DEERE & COMPANY Moline, Illinois All rights reserved

(1H12) HYDROSTATIC PUMP LINES
CONDUITES DE POMPE
HYDROSTAT PUMPENLEITUNGEN
LINEE DELLA POMPA IDROSTATICA
TUBERIAS DE LA BOMBA HIDROSTATICA
HYDROSTATISKT PUMPENS LEDNINGAR

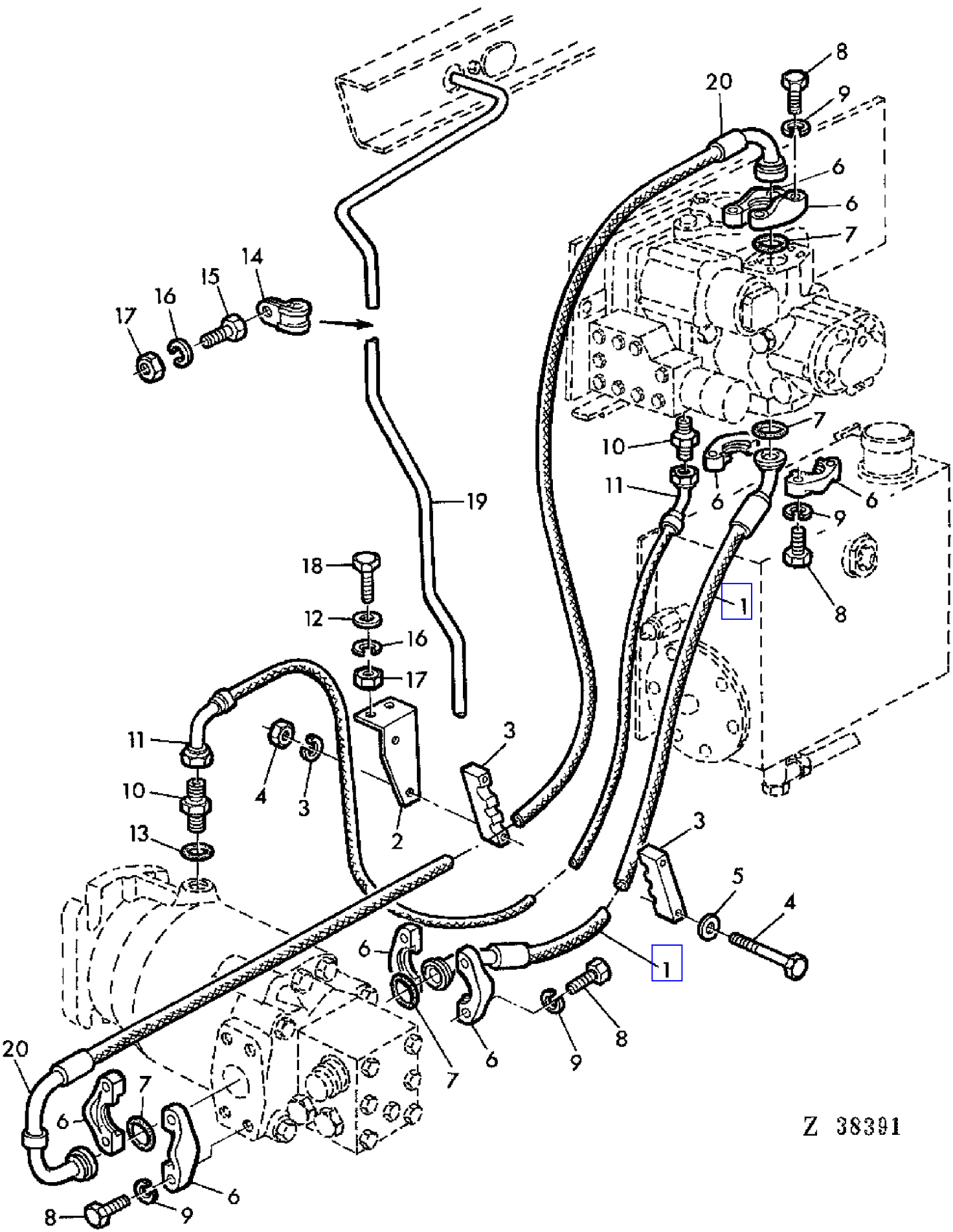

COPYRIGHT©1994 - 2008 DEERE & COMPANY Moline, Illinois All rights reserved

(1H12) HYDROSTATIC PUMP LINES
CONDUITES DE POMPE
HYDROSTAT PUMPENLEITUNGEN
LINEE DELLA POMPA IDROSTATICA
TUBERIAS DE LA BOMBA HIDROSTATICA
HYDROSTATISKT PUMPENS LEDNINGAR

KEY	PART NO.	PART NAME	QTY	SERIAL NO.	975	975HY/4	REMARKS
1	AZ26392	HYDRAULIC HOSE	1			X	
2	Z37597	HOLDER	1			X	
3	Z37596	CLAMP	2			X	
4	19M7296	CAP SCREW	2			X	M8 X 100
5	24M7036	WASHER	AR			X	9 MM
6	H61354	FLANGE FITTING	4			X	
7	H61355	O-RING	2			X	
8	19H1732	CAP SCREW	8			X	3/8" X 1-1/4"
9	12H304	LOCK WASHER	AR			X	3/8"
10	Z37461	FITTING	1			X	
11	AZ26387	HYDRAULIC HOSE	1			X	
12	24M7040	WASHER	AR			X	11 MM
13	R26906	O-RING	1			X	
14	Z34215	CLAMP	2			X	
15	19M7166	CAP SCREW	2			X	M10 X 20
16	12M7013	LOCK WASHER	AR			X	10 MM
17	14M7140	NUT	AR			X	M10
18	19M7167	CAP SCREW	1			X	M10 X 25
19	Z38809	OIL LINE	1			X	
20	AZ26391	HYDRAULIC HOSE	1			X	

COPYRIGHT©1994 - 2008 DEERE & COMPANY Moline, Illinois All rights reserved

(3A19) INDICATORS
INDICATEURS
ANZEIGEGERAETE
INDICATORI
INDICADORES
MATARE

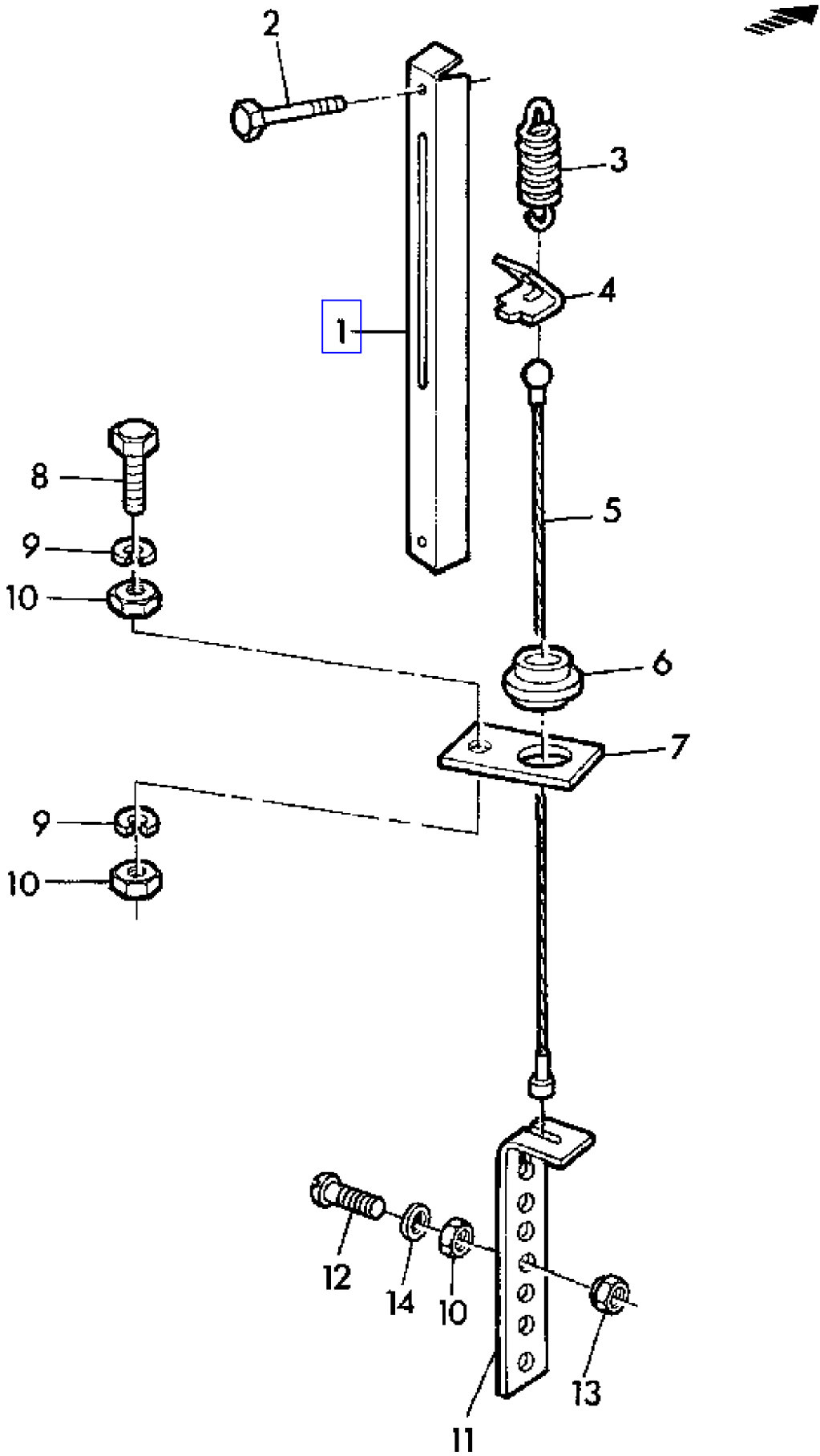

Z 31561

COPYRIGHT©1994 - 2008 DEERE & COMPANY Moline, Illinois All rights reserved

(3A19) INDICATORS
INDICATEURS
ANZEIGEGERAETE
INDICATORI
INDICADORES
MATARE

KEY	PART NO.	PART NAME	QTY	SERIAL NO.	975	975HY/4	REMARKS
1	Z30003	CASE	1		X	X	
2	19M7319	SCREW	2		X	X	M6 X 60
3	L12259	SPRING	1		X	X	
4	Z30000	POINTER	1		X	X	
5	AZ20466	CABLE	1		X	X	RH
6	Z25419	EYELET	2		X	X	
7	Z31807	HOLDER	2		X	X	
8	19M7288	CAP SCREW	2		X	X	M8 X 30
9	12M7008	LOCK WASHER	AR		X	X	8 MM
10	14M7029	NUT	AR		X	X	M8
11	Z30001	HOLDER	1		X	X	
12	21M7161	SCREW	1		X	X	M8 X 30
13	14M7166	LOCK NUT	1		X	X	M8
14	24M7036	WASHER	1		X	X	9 MM

COPYRIGHT©1994 - 2008 DEERE & COMPANY Moline, Illinois All rights reserved

(2B24) INDIVIDUAL PARTS FOR STEERING
PIECES DETACHEES POUR DIRECTION
EINZELTEILE ZUR LENKUNG
PARTI SINGOLE DELLO STERZO
PIEZAS PARA LA DIRECCION
DELAR FOR STYRNING

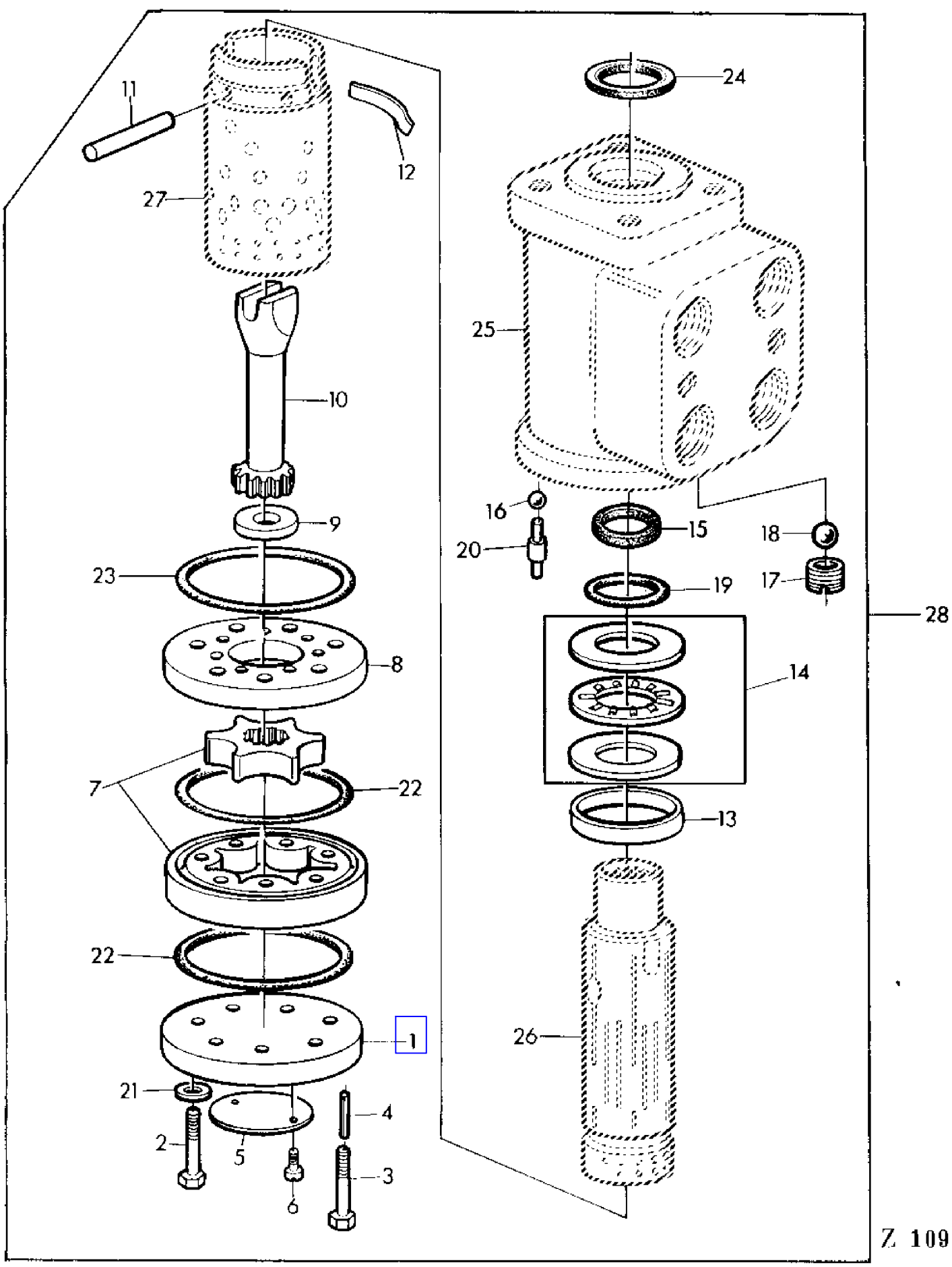

COPYRIGHT©1994 - 2008 DEERE & COMPANY Moline, Illinois All rights reserved

(2B24) INDIVIDUAL PARTS FOR STEERING
PIECES DETACHEES POUR DIRECTION
EINZELTEILE ZUR LENKUNG
PARTI SINGOLE DELLO STERZO
PIEZAS PARA LA DIRECCION
DELAR FOR STYRNING

KEY	PART NO.	PART NAME	QTY	SERIAL NO.	975	975HY/4	REMARKS
1	Z31359	COVER	1		X	X	
2	Z31362	CAP SCREW	6		X	X	
3	Z31361	CAP SCREW	1		X	X	
4	Z31360	SPRING PIN	1		X	X	
5	Z31363	SERIAL NUMBER PLATE	1		X	X	
6	Z31364	SCREW	2		X	X	
7	AZ20005	STEERING METERING PUMP	1		X	X	
8	Z31358	DISTRIBUTOR PLATE	1		X	X	
9	Z31357	WASHER	1		X	X	
10	Z31356	DRIVE SHAFT	1		X	X	
11	Z31354	PIN	1		X	X	
12	AZ25154	LEAF SPRING	1		X	X	KIT (SUB FOR Z31355)
13	Z31353	RING	1		X	X	
14	AL36989	THRUST BEARING	1		X	X	(SUB FOR AZ20006, Z31351, Z31352)
15	Z31455	BACK-UP RING	1		X	X	(ORD AZ20003)
16	Z36098	BALL	2		X	X	
17	Z31350	PIPE PLUG	1		X	X	
18	Z31349	BALL	1		X	X	(SUB FOR L38725)
19	Z31452	O-RING	1		X	X	(ORD AZ20003)
20	AZ25845	PIN	2		X	X	(SUB FOR Z36100, Z36148, Z36149)
21	Z31456	WASHER	6		X	X	(ORD AZ20003)
22	Z31454	O-RING	2		X	X	(ORD AZ20003)
23	Z31453	O-RING	1		X	X	(ORD AZ20003)
24	Z31348	SEAL	1		X	X	(ORD AZ20003)
25	.....	HOUSING	1		X	X	(ORD AZ25103)
26	.....	VALVE SPOOL	1		X	X	(ORD AZ25103)
27	.....	SLEEVE	1		X	X	(ORD AZ25103)
28	AZ25103	STEERING METERING PUMP	1		X	X	INCL KEYS 1-27, DANFOSS-150-1045 (SUB FOR AZ20002)
..	AZ20003	SEAL KIT	1		X	X	KIT, INCL KEYS 15,19,21-24

COPYRIGHT©1994 - 2008 DEERE & COMPANY Moline, Illinois All rights reserved

(3D21) INNER FILTER-AIR CONDITIONED CAB
FILTRE INTERIEUR-CABINE CLIMATISEE
INNERER FILTER-KABINE MIT KLIMAANLAGE
FILTRO INTERNO-CABINA CONDIZIONATA
FILTRO INTERNO-CABINA CON AIRE ACONDICIONADO
INRE FILTER-HYTT MED LUFTKONDITIONERING

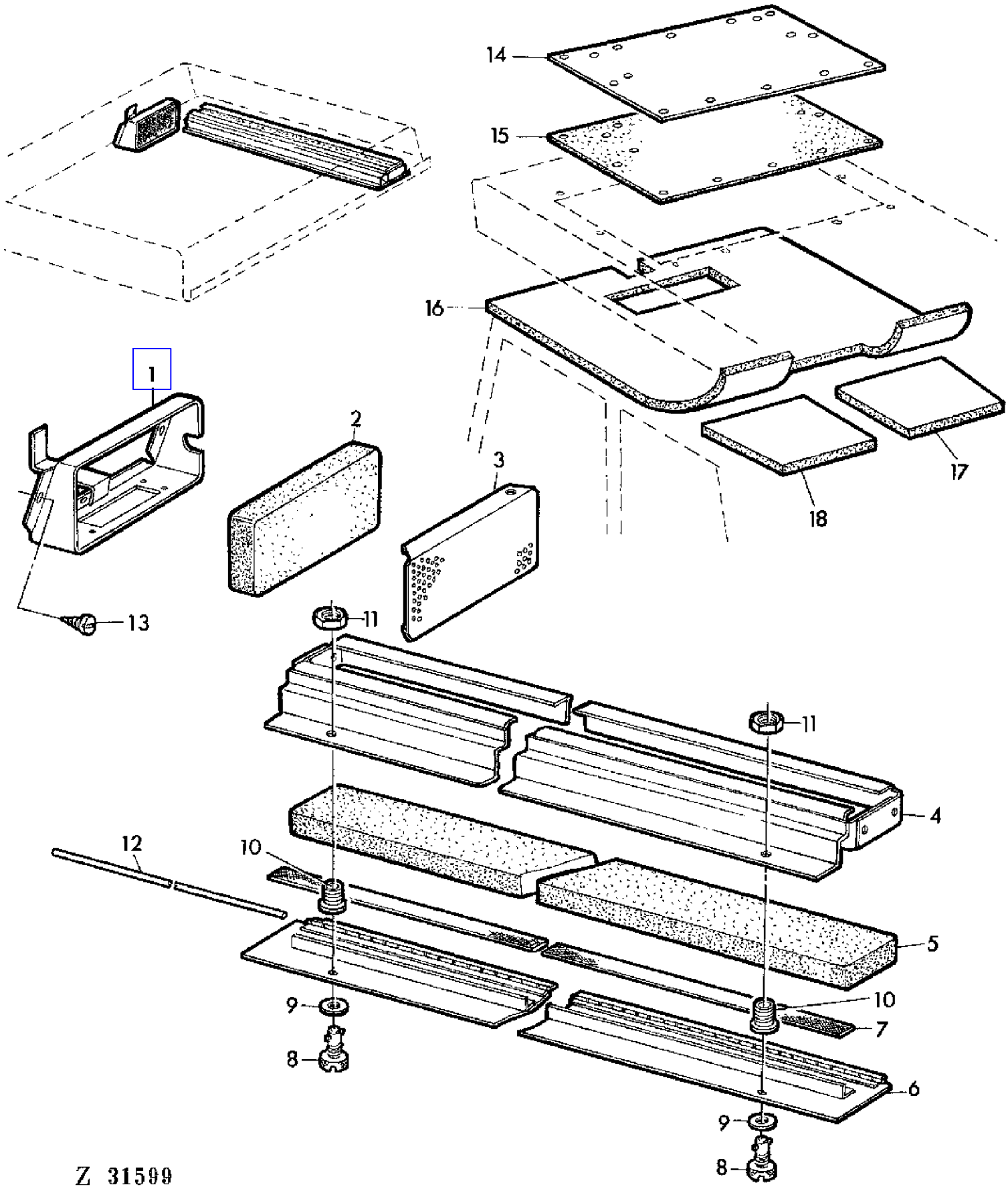

COPYRIGHT©1994 - 2008 DEERE & COMPANY Moline, Illinois All rights reserved

(3D21) INNER FILTER-AIR CONDITIONED CAB
FILTRE INTERIEUR-CABINE CLIMATISEE
INNERER FILTER-KABINE MIT KLIMAANLAGE
FILTRO INTERNO-CABINA CONDIZIONATA
FILTRO INTERNO-CABINA CON AIRE ACONDICIONADO
INRE FILTER-HYTT MED LUFTKONDITIONERING

KEY	PART NO.	PART NAME	QTY	SERIAL NO.	975	975HY	REMARKS
1	AH83236	CASE	1		X	X	
2	H83127	AIR FILTER	1		X	X	
3	H83125	SCREEN	1		X	X	
4	AH84395	CASE	1		X	X	
5	H84113	AIR FILTER	1		X	X	
6	AH82228	DOOR	1		X	X	ASSY, INCL KEY 12
7	H81847	WEATHERSTRIP	1		X	X	1/8" X 1/4" X 20" 3MM X 6MM X 6096MM
8	AH80347	LATCH	2		X	X	
9	H83283	WASHER	2		X	X	
10	H81812	SOCKET OUTLET	2		X	X	
11	H81813	NUT	2		X	X	
12	H81802	PIN	1		X	X	
13	37H1	SCREW	4		X	X	3/8"
14	H88578	SHEET	1		X	X	
15	H88779	SEAL	1		X	X	
16	AH96288	INSULATOR	1		X	X	
17	AH86826	INSULATOR	1		X	X	RH
18	AH86827	INSULATOR	1		X	X	LH

COPYRIGHT©1994 - 2008 DEERE & COMPANY Moline, Illinois All rights reserved

(2G06) INSPECTION COVER,LEFT HAND(CRAWLER TRACKS)
PORTE DE VISITE GAUCHE (TRAIN A CHENILLES)
VERKLEIDUNG LINKS(TUER)RAUPENFAHRWERK
PORTELLO D'ISPEZIONE SINISTRO(CINGOLATURA)
CHAPAS DE PROTECCION,LADO IZQUIERDO
INSPEKTIONSLUCKA,VANSTER(BANDUTRUSTNING)

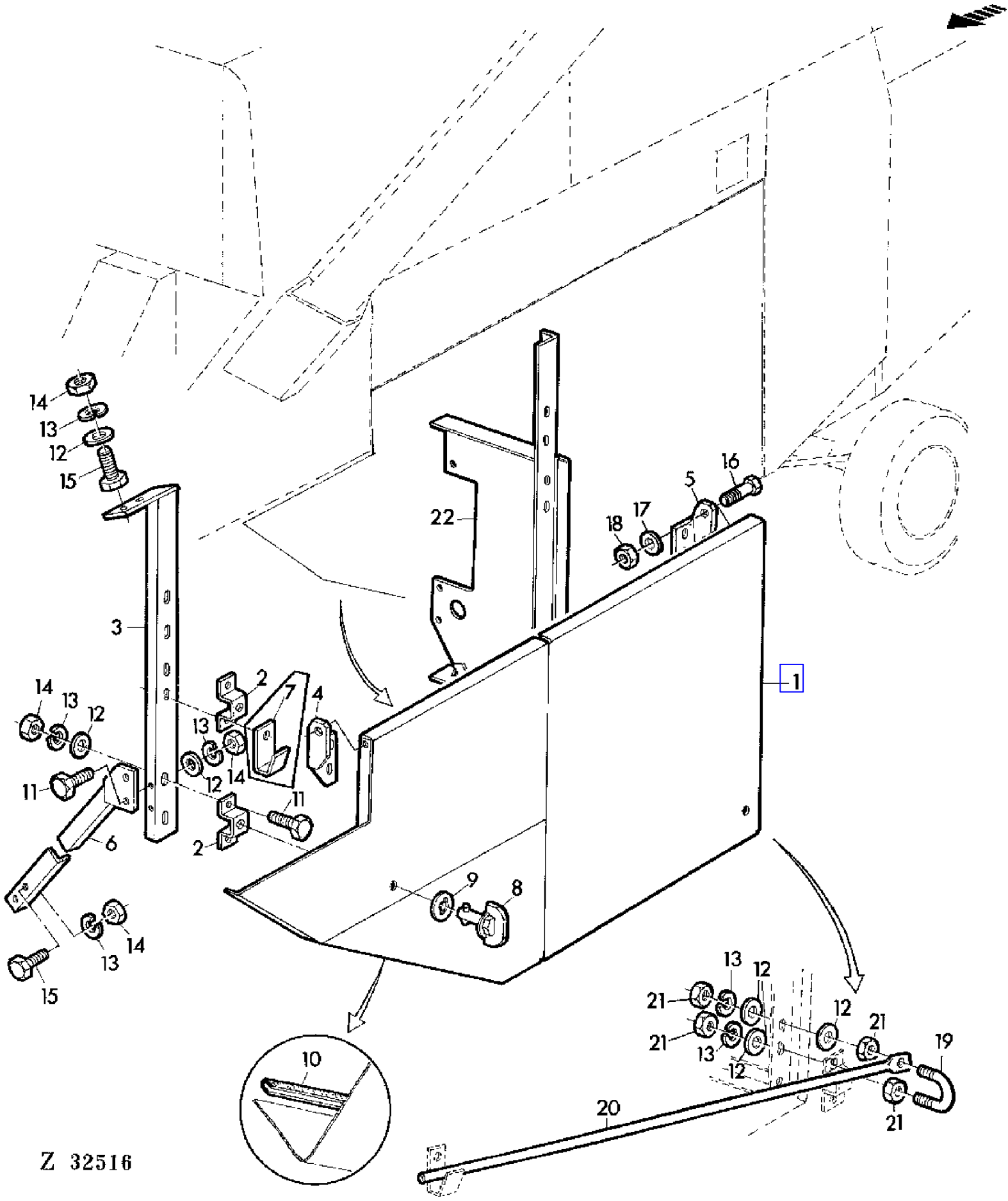

COPYRIGHT©1994 - 2008 DEERE & COMPANY Moline, Illinois All rights reserved

(2G06) INSPECTION COVER,LEFT HAND(CRAWLER TRACKS)
PORTE DE VISITE GAUCHE (TRAIN A CHENILLES)
VERKLEIDUNG LINKS(TUER)RAUPENFAHRWERK
PORTELLO D'ISPEZIONE SINISTRO(CINGOLATURA)
CHAPAS DE PROTECCION,LADO IZQUIERDO
INSPEKTIONSLUCKA,VANSTER(BANDUTRUSTNING)

KEY	PART NO.	PART NAME	QTY	SERIAL NO.	975	975HY	REMARKS
1	AZ24014	GUARD	1		X		
	AZ26510	GUARD	1			X	
	AZ26511	GUARD	1			X	(A)
2	AZ23934	RETAINER	2		X	X	
3	AZ24013	BRACE	1		X	X	
4	Z34965	HOLDER	1		X	X	
5	Z34966	HOLDER	1		X	X	
6	AZ25688	BRACE	1		X	X	(SUB FOR AZ23933)
7	Z34962	RETAINER	1	- 006195	X		
8	AZ23253	LATCH	2		X	X	
9	Z34136	WASHER	2		X	X	
10	Z30991	GUARD	1		X	X	
11	19M7162	CAP SCREW	AR		X	X	M8 X 16
12	24M7036	WASHER	AR		X	X	9 MM
13	12M7008	LOCK WASHER	AR		X	X	8 MM
14	14M7029	NUT	AR		X	X	M8
15	19M7139	CAP SCREW	AR		X	X	M8 X 20
16	19M7167	CAP SCREW	AR		X	X	M10 X 25
17	24M7096	WASHER	AR		X	X	10,5 MM
18	14M7167	LOCK NUT	AR		X	X	M10
19	Z23660	U-BOLT	1		X	X	
20	Z35130	ROD	1		X	X	
21	14M7151	NUT	4		X	X	M8
22	AZ22574	GUARD	1		X	X	

(A) WITH TRACKS ONLY
UNIQUEMENT AVEC CHENILLES
NUR BEI RAUPENAUSRUESTUNG
SOLO CON CATENE A CINGOLI
SOLO AL USAR DRUGAS
ENDAST VID BANDVAGN

COPYRIGHT©1994 - 2008 DEERE & COMPANY Moline, Illinois All rights reserved

(2G16) INSPECTION COVER,RIGHT HAND
PORTE DE VISITE DROITE (TRAIN DE CHENILLES)
VERKLEIDUNG RECHTS,RAUPENFAHRWERK
PORTELLO D'ISPEZIONE DESTRO (CINGOLATURA)
CHAPAS DE PROTECCION,LADO DERECHO
INSPEKTIONSLUCKA,HOGER (BANDUTRUSTNING)

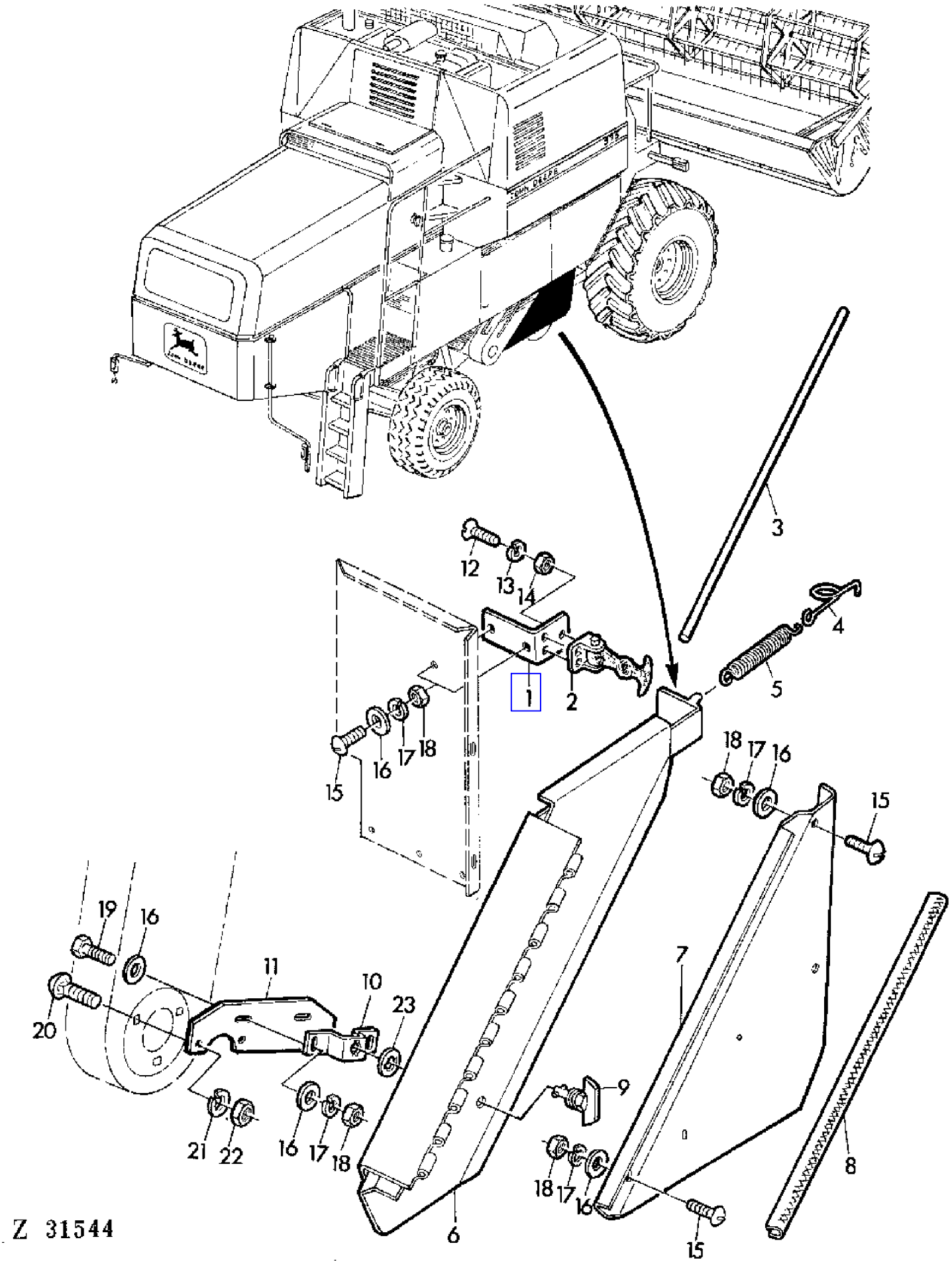

COPYRIGHT©1994 - 2008 DEERE & COMPANY Moline, Illinois All rights reserved

(2G16) INSPECTION COVER,RIGHT HAND
PORTE DE VISITE DROITE (TRAIN DE CHENILLES)
VERKLEIDUNG RECHTS,RAUPENFAHRWERK
PORTELLO D'ISPEZIONE DESTRO (CINGOLATURA)
CHAPAS DE PROTECCION,LADO DERECHO
INSPEKTIONSLUCKA,HOGER (BANDUTRUSTNING)

KEY	PART NO.	PART NAME	QTY	SERIAL NO.	975	975HY	REMARKS
1	Z35168	ANGLE	1		X	X	
2	AL14927	GRIP	1		X	X	
3	Z20277	PIN	1		X	X	
4	Z34398	HOOK	1		X	X	
5	L18886	SPRING	1		X	X	
6	AZ24337	GUARD	1		X	X	INCL KEYS 4,5,9,23
7	AZ24212	GUARD	1		X	X	
8	Z31169	GUARD	1		X	X	
9	AZ23253	LATCH	1		X	X	
10	AZ24338	HOLDER	1		X	X	
11	Z35171	PLATE	1	- 016667	X		
	Z38277	PLATE	1	016668 -	X	X	
12	21M7153	SCREW	3		X	X	M4 X 15
13	12M7031	LOCK WASHER	3		X	X	4 MM
14	14M7139	NUT	3		X	X	M4
15	21M7031	SCREW	2		X	X	M6 X 15
16	Z26250	WASHER	4		X	X	
17	12M7012	LOCK WASHER	4		X	X	6 MM
18	14M7027	NUT	4		X	X	M6
19	19M7159	CAP SCREW	2		X	X	M6 X 16
20	03M7054	BOLT	2		X	X	M8 X 20
21	12M7008	LOCK WASHER	2		X	X	8 MM
22	14M7029	NUT	2		X	X	M8
23	Z34136	WASHER	1		X	X	

COPYRIGHT©1994 - 2008 DEERE & COMPANY Moline, Illinois All rights reserved

(2F10) LADDER TO REAR SERVICE PLATFORM
ACCES A LA PLATE-FORME ARRIERE D'ENTRETIEN
AUFSTIEG ZUR WARTUNGSPLATTFORM HINTEN
ACCESSO ALLA PIATTAFORMA DI MANUTENZIONE POSTERIORE
ESCALERA Y PASAMANO DE LA PLATAFORMA TRASERA
STEGE TILL BAKRE SERVICEPLATTFORM

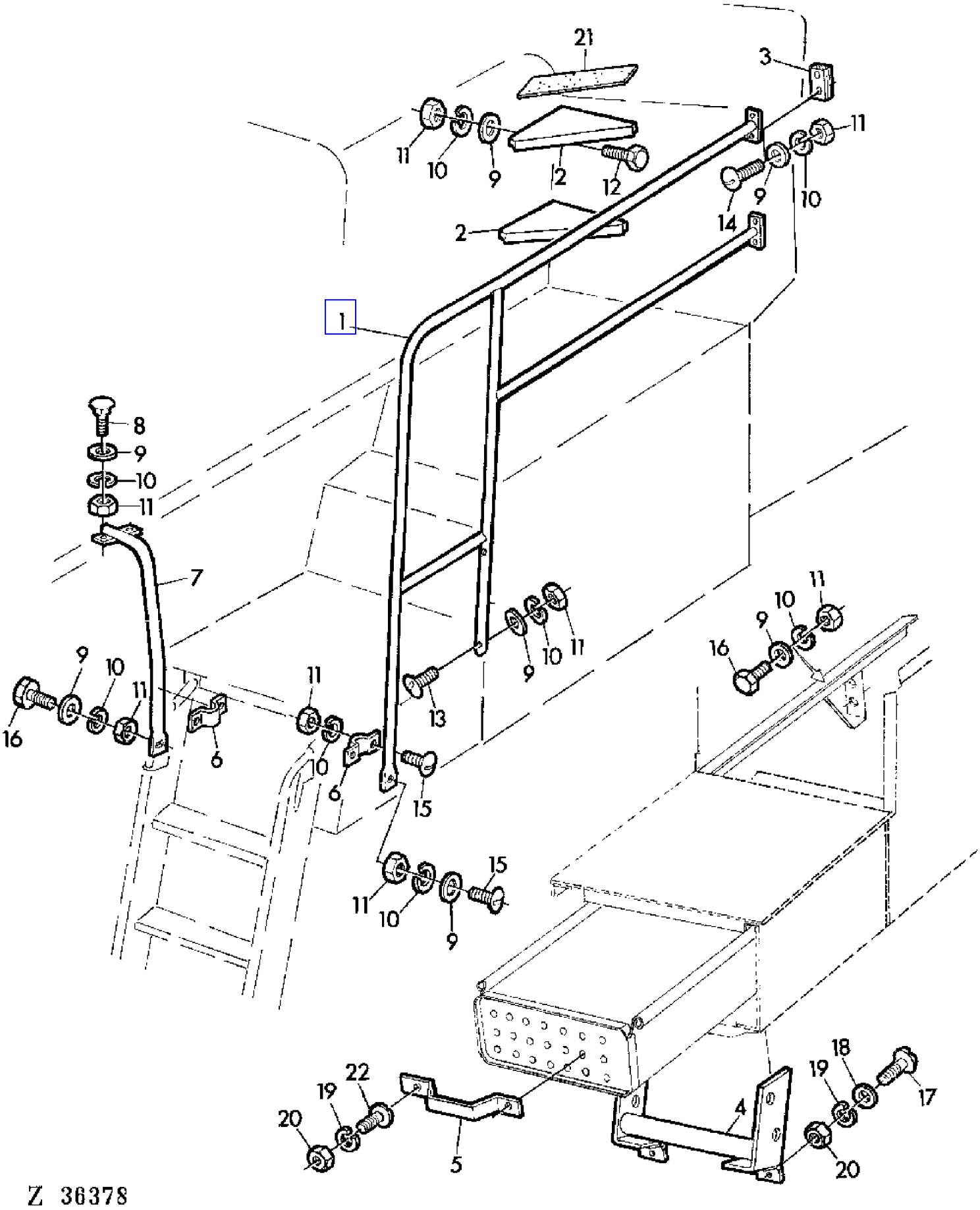

COPYRIGHT©1994 - 2008 DEERE & COMPANY Moline, Illinois All rights reserved

(2F10) LADDER TO REAR SERVICE PLATFORM
ACCES A LA PLATE-FORME ARRIERE D'ENTRETIEN
AUFSTIEG ZUR WARTUNGSPLATTFORM HINTEN
ACCESSO ALLA PIATTAFORMA DI MANUTENZIONE POSTERIORE
ESCALERA Y PASAMANO DE LA PLATAFORMA TRASERA
STEGE TILL BAKRE SERVICEPLATTFORM

KEY	PART NO.	PART NAME	QTY	SERIAL NO.	975	975HY/4	REMARKS
1	AZ23596	HANDRAIL	1		X	X	
2	Z33359	STEP	2		X	X	
3	Z34591	STRAP	1		X	X	
4	AZ24268	REINFORCEMENT	1		X	X	
5	Z43506	RETAINER	1		X	X	AR (SUB FOR Z34533)
6	Z34537	CLAMP	2		X	X	
7	AZ23605	HANDRAIL	1		X	X	
8	03M7128	BOLT	2		X	X	M8 X 20
9	24M7036	WASHER	17		X	X	9 MM
10	12M7008	LOCK WASHER	19		X	X	8 MM
11	14M7029	NUT	19		X	X	M8
12	19M7284	CAP SCREW	4		X	X	M8 X 18
13	21M7205	SCREW	4		X	X	M8 X 45
14	03M7120	BOLT	AR		X	X	M8 X 55
15	21M7125	SCREW	3		X	X	M8 X 25
16	19M7163	CAP SCREW	5		X	X	M8 X 25
17	21M7087	SCREW	2		X	X	M6 X 12
18	24M7088	WASHER	2		X	X	6,6 MM
19	12M7012	LOCK WASHER	2		X	X	6 MM
20	14M7027	NUT	2		X	X	M6
21	Z34592	GUARD	AR		X	X	
22	21M7031	SCREW	2		X	X	M6 X 15

COPYRIGHT©1994 - 2008 DEERE & COMPANY Moline, Illinois All rights reserved

(3B02) LEFT-HAND SHIFT LEVER
LEVIER DE COMMANDE GAUCHE
BEDIENUNGSHEBEL LINKS
LEVE DI COMANDO SINISTRA
PALANCA DE MANDO IZQUIERDA
VANSTER MANOVERSPAKAR

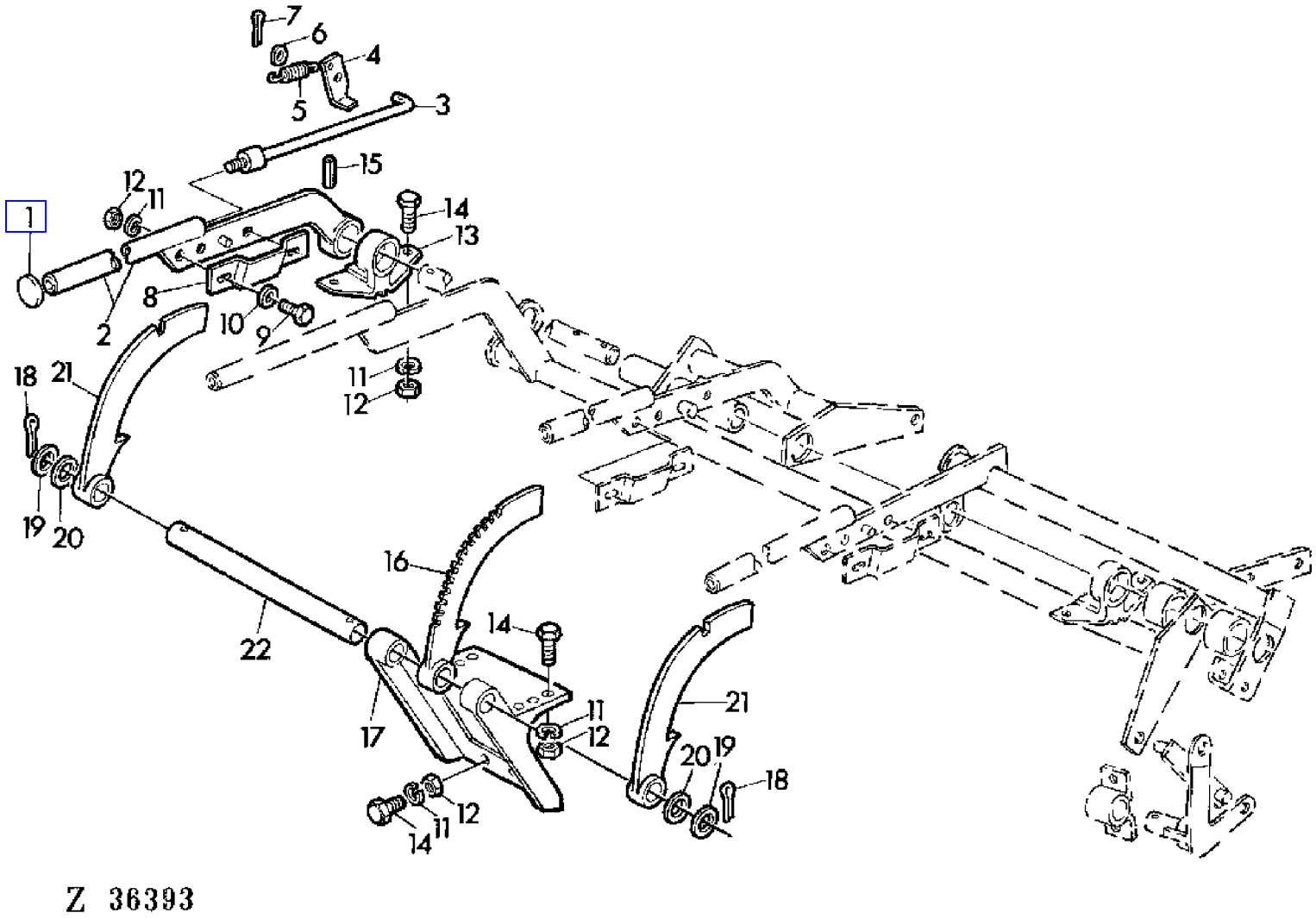

COPYRIGHT©1994 - 2008 DEERE & COMPANY Moline, Illinois All rights reserved

(3B02) LEFT-HAND SHIFT LEVER
LEVIER DE COMMANDE GAUCHE
BEDIENUNGSHEBEL LINKS
LEVE DI COMANDO SINISTRA
PALANCA DE MANDO IZQUIERDA
VANSTER MANOVERSPAKAR

KEY	PART NO.	PART NAME	QTY	SERIAL NO.	975	975HY	REMARKS
1	Z34446	KNOB	1		X	X	
2	AZ23855	LEVER	1		X	X	
3	AZ23854	ROD	1		X	X	
4	Z21834	LATCH	1		X	X	
5	Z21613	EXTENSION SPRING	1		X	X	
6	24M7040	WASHER	1		X	X	11 MM
7	11M7014	COTTER PIN	1		X	X	3 X 25 MM
8	Z36022	RETAINER	1		X	X	
9	19M7163	CAP SCREW	2		X	X	8 X 25 MM
10	24M7036	WASHER	2		X	X	8,4 MM
11	12M7008	LOCK WASHER	AR		X	X	8 MM
12	14M7029	NUT	AR		X	X	M8
13	Z10207	BEARING	1		X	X	
14	19M7163	CAP SCREW	AR		X	X	M8 X 25
15	34M7047	SPRING PIN	1		X	X	8 X 40 MM
16	Z11323	SECTOR	1		X	X	(SUB FOR Z10248)
17	AZ29888	BRACKET	1		X	X	(SUB FOR AZ27537, Z10752)
18	11M7024	COTTER PIN	2		X	X	4 X 40 MM
19	24M7108	WASHER	2		X	X	20 MM
20	Z27188	SHIM	2		X	X	
21	Z11325	SECTOR	2		X	X	(SUB FOR Z10900)
22	Z33661	SHAFT	1		X	X	

COPYRIGHT©1994 - 2008 DEERE & COMPANY Moline, Illinois All rights reserved

(3B04) LEFT-HAND SHIFT LEVER
LEVIER DE COMMANDE GAUCHE
BEDIENUNGSHEBEL LINKS
LEVE DI COMANDO SINISTRA
PALANCA DE MANDO IZQUIERDA
VANSTER MANOVERSPAKAR

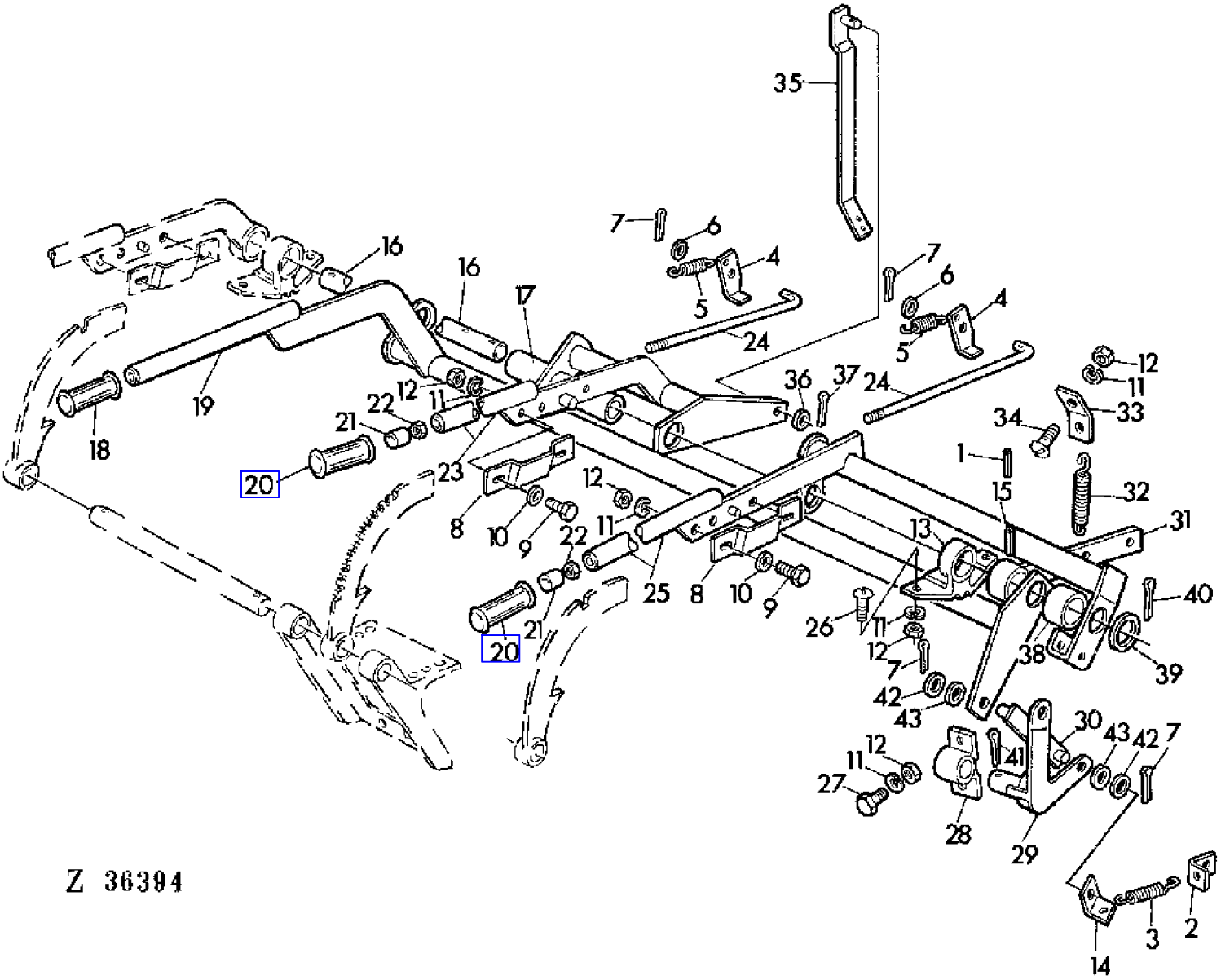

COPYRIGHT©1994 - 2008 DEERE & COMPANY Moline, Illinois All rights reserved

(3B04) LEFT-HAND SHIFT LEVER
LEVIER DE COMMANDE GAUCHE
BEDIENUNGSHEBEL LINKS
LEVE DI COMANDO SINISTRA
PALANCA DE MANDO IZQUIERDA
VANSTER MANOVERSPAKAR

KEY	PART NO.	PART NAME	QTY	SERIAL NO.	975	975HY/4	REMARKS
1	34M7035	SPRING PIN	1		X	X	5 X 40 MM
2	Z35543	RETAINER	1		X	X	
3	Z35544	EXTENSION SPRING	1		X	X	
4	Z21834	LATCH	2		X	X	
5	Z21613	EXTENSION SPRING	2		X	X	
6	24M7040	WASHER	2		X	X	11 MM
7	11M7014	COTTER PIN	AR		X	X	3 X 25 MM
8	Z36022	RETAINER	2		X	X	(SUB FOR Z10205)
9	19M7163	CAP SCREW	4		X	X	M8 X 25
10	24M7036	WASHER	4		X	X	8,4 MM
11	12M7008	LOCK WASHER	AR		X	X	8 MM
12	14M7029	NUT	AR		X	X	M8
13	Z10207	BEARING	1		X	X	
14	Z22572	HOLDER	1		X	X	
15	34M7047	SPRING PIN	1		X	X	8 X 40 MM
16	Z23436	SHAFT	1		X	X	
17	Z23433	PIPE	1		X	X	
18	Z30976	HANDLE	1		X	X	(A)
19	AZ13081	LEVER	1		X	X	
20	Z26789	GRIP	2		X	X	(B) (SUB FOR Z26791)
21	Z21823	KNOB	2		X	X	
22	14M7027	NUT	2		X	X	M6
23	AZ13085	LEVER	1		X	X	
24	Z21824	HOOK BOLT	2		X	X	
25	AZ22668	LEVER	1		X	X	
26	21M7125	SCREW	2		X	X	M8 X 25
27	19M7288	CAP SCREW	2		X	X	M8 X 30
28	Z10201	BEARING	1		X	X	
29	Z10202	LEVER	1		X	X	
30	AZ10984	STRAP	1		X	X	
31	AZ22670	LEVER	1		X	X	
32	E10086	SPRING	1		X	X	
33	Z33659	ANGLE	1		X	X	
34	21M7081	SCREW	2		X	X	M8 X 15
35	AZ13285	LEVER	1		X	X	
36	24M7038	WASHER	1		X	X	14 MM
37	11M7013	COTTER PIN	1		X	X	3 X 20 MM
38	Z21832	SPACER	1		X	X	

(A) YELLOW
JAUNE
GELB
GIALLO
AMARILLO
GUL

(B) BLACK
NOIR
SCHWARZ
NERO
NEGRO
SVART

COPYRIGHT©1994 - 2008 DEERE & COMPANY Moline, Illinois All rights reserved

(3B04) LEFT-HAND SHIFT LEVER
LEVIER DE COMMANDE GAUCHE
BEDIENUNGSHEBEL LINKS
LEVE DI COMANDO SINISTRA
PALANCA DE MANDO IZQUIERDA
VANSTER MANOVERSPAKAR

KEY	PART NO.	PART NAME	QTY	SERIAL NO.	975	975HY	REMARKS
39	Z24651	WASHER	3		X	X	
40	11M7038	COTTER PIN	1		X	X	6 X 45 MM
41	11M7024	COTTER PIN	1		X	X	4 X 40 MM
42	Z27186	SHIM	2		X	X	
43	Z27187	WASHER	2		X	X	

(A) YELLOW
JAUNE
GELB
GIALLO
AMARILLO
GUL

(B) BLACK
NOIR
SCHWARZ
NERO
NEGRO
SVART

COPYRIGHT©1994 - 2008 DEERE & COMPANY Moline, Illinois All rights reserved

(1G04) LIGHTING-CUTTING PLATFORM
ECLAIRAGE DE LA PLATE-FORME DE COUPE
BELEUCHTUNG SCHNEIDWERK
LUCI PIATTAFORMA CORTE
LUCES PARA PLATAFORMA DE CORTE
SKARBORDETS BELYSNING

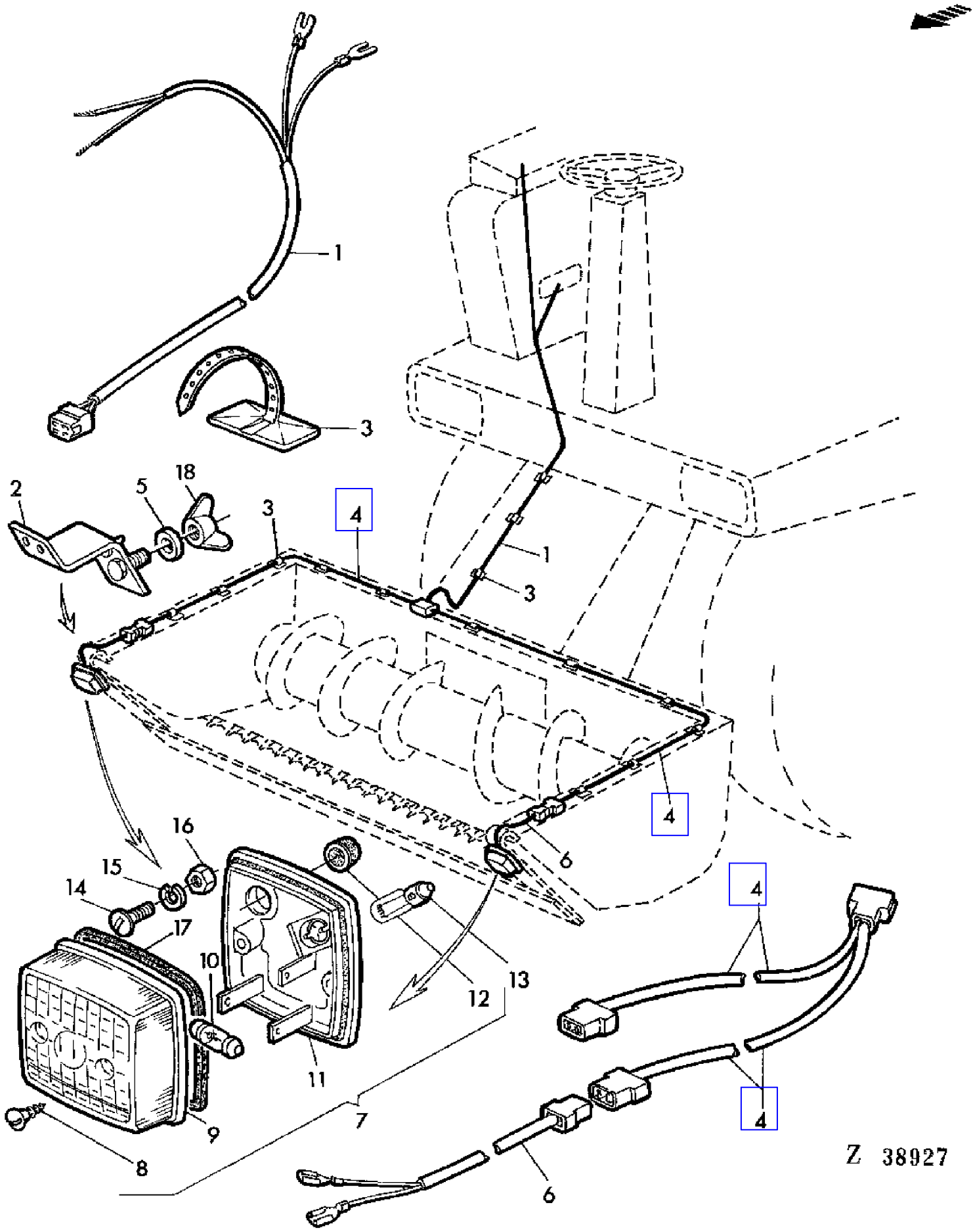

COPYRIGHT©1994 - 2008 DEERE & COMPANY Moline, Illinois All rights reserved

(1G04) LIGHTING-CUTTING PLATFORM
ECLAIRAGE DE LA PLATE-FORME DE COUPE
BELEUCHTUNG SCHNEIDWERK
LUCI PIATTAFORMA CORTE
LUCES PARA PLATAFORMA DE CORTE
SKARBORDETS BELYSNING

KEY	PART NO.	PART NAME	QTY	SERIAL NO.	975	975HY/4	REMARKS
1	AZ23919	WIRING HARNESS	1		X	X	ASSY
2	AZ30957	HOLDER	2		X	X	
3	Z36647	CLAMP	12		X	X	
4	AZ23920	WIRING HARNESS	1		X	X	ASSY
5	24M7036	WASHER	2		X	X	
6	AZ23918	WIRING HARNESS	2		X	X	
7	AL25644	TURN SIGNAL LAMP	2		X	X	ASSY
8	37M7034	SCREW	4		X	X	4,2 X 32 MM
9	AL27013	LENS	2		X	X	INCL KEY 8
10	57M6274	BULB	2		X	X	12V 5W
11	.....	HOUSING	2		X	X	NSEP (ORD KEY 7)
12	Z34569	GROMMET	2		X	X	
13	57M7014	BULB	2		X	X	12V 21W
14	21M7197	SCREW	4		X	X	M4 X 20
15	12M7031	LOCK WASHER	4		X	X	4 MM
16	14M7139	NUT	4		X	X	M4
17	Z40994	GASKET	2		X	X	
18	Z20285	WING NUT	2		X	X	

COPYRIGHT©1994 - 2008 DEERE & COMPANY Moline, Illinois All rights reserved

(3E08) LOCKING LEVER (REVERSER CLUTCH)
LEVIER DE VERROUILLAGE (REVERMATIC)
SPERRHEBEL (WECHSELKUPPLUNG)
LEVA DI BLOCCO (INVERSORE REVERMATIC)
PALANCA DE BLOQUEO (REVERMATIC)
SPARRSPAK (FRAM-BACK KOPPLING)

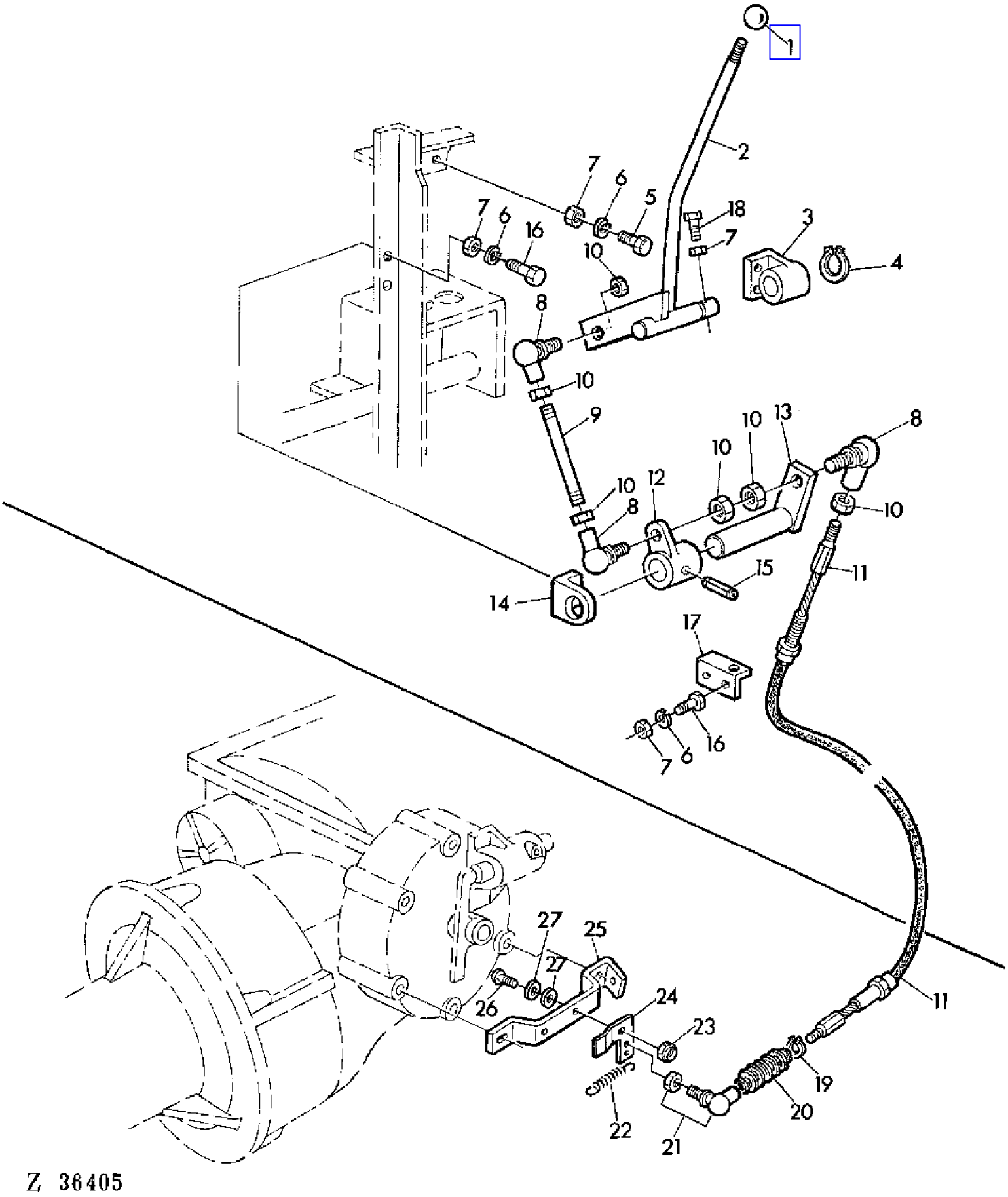

COPYRIGHT©1994 - 2008 DEERE & COMPANY Moline, Illinois All rights reserved

(3E08) LOCKING LEVER (REVERSER CLUTCH)
LEVIER DE VERROUILLAGE (REVERMATIC)
SPERRHEBEL (WECHSELKUPPLUNG)
LEVA DI BLOCCO (INVERSORE REVERMATIC)
PALANCA DE BLOQUEO (REVERMATIC)
SPARRSPAK (FRAM-BACK KOPPLING)

KEY	PART NO.	PART NAME	QTY	SERIAL NO.	975	975HY/4	REMARKS
1	39M1709	KNOB	1		X		
2	AZ31049	LEVER	1		X		(SUB FOR AZ19343)
3	Z10734	BEARING	1		X		
4	40M1822	SNAP RING	1		X		16 X 9 MM
5	19M7376	CAP SCREW	2		X		M8 X 22
6	12M7008	LOCK WASHER	6		X		8 MM
7	14M7029	NUT	6		X		M8
8	AZ12786	BALL JOINT	3		X		
9	Z30709	STUD	1		X		
10	14M7027	NUT	6		X		M6
11	AZ24031	PUSH PULL CABLE	1		X		
12	Z10733	LEVER	1		X		
13	AZ19347	LEVER	1		X		
14	Z30710	RETAINER	1		X		
15	34M7039	SPRING PIN	1		X		6 X 28 MM
16	19M7139	CAP SCREW	4		X		M8 X 20
17	Z30711	RETAINER	1		X		
18	19M7377	CAP SCREW	1		X		M8 X 28
19	Z35657	SNAP RING	1		X		
20	Z35656	BOOT	1		X		
21	AZ12786	BALL JOINT	1		X		
22	Z30447	SPRING	1		X		
23	14M7203	NUT	1		X		M8
24	Z35025	LATCH	1		X		
25	Z35026	BAIL	1		X		
26	21M7213	SCREW	1		X		M8 X 10
27	24M7096	WASHER	2		X		10,5 MM

COPYRIGHT©1994 - 2008 DEERE & COMPANY Moline, Illinois All rights reserved

(4C22) LOWER CHAFFER BOARD
CAISSON SASSEUR
SCHUETTELKASTEN
CASSONE DI PULIZIA
CAJA DE CRIBAS
SALLADA

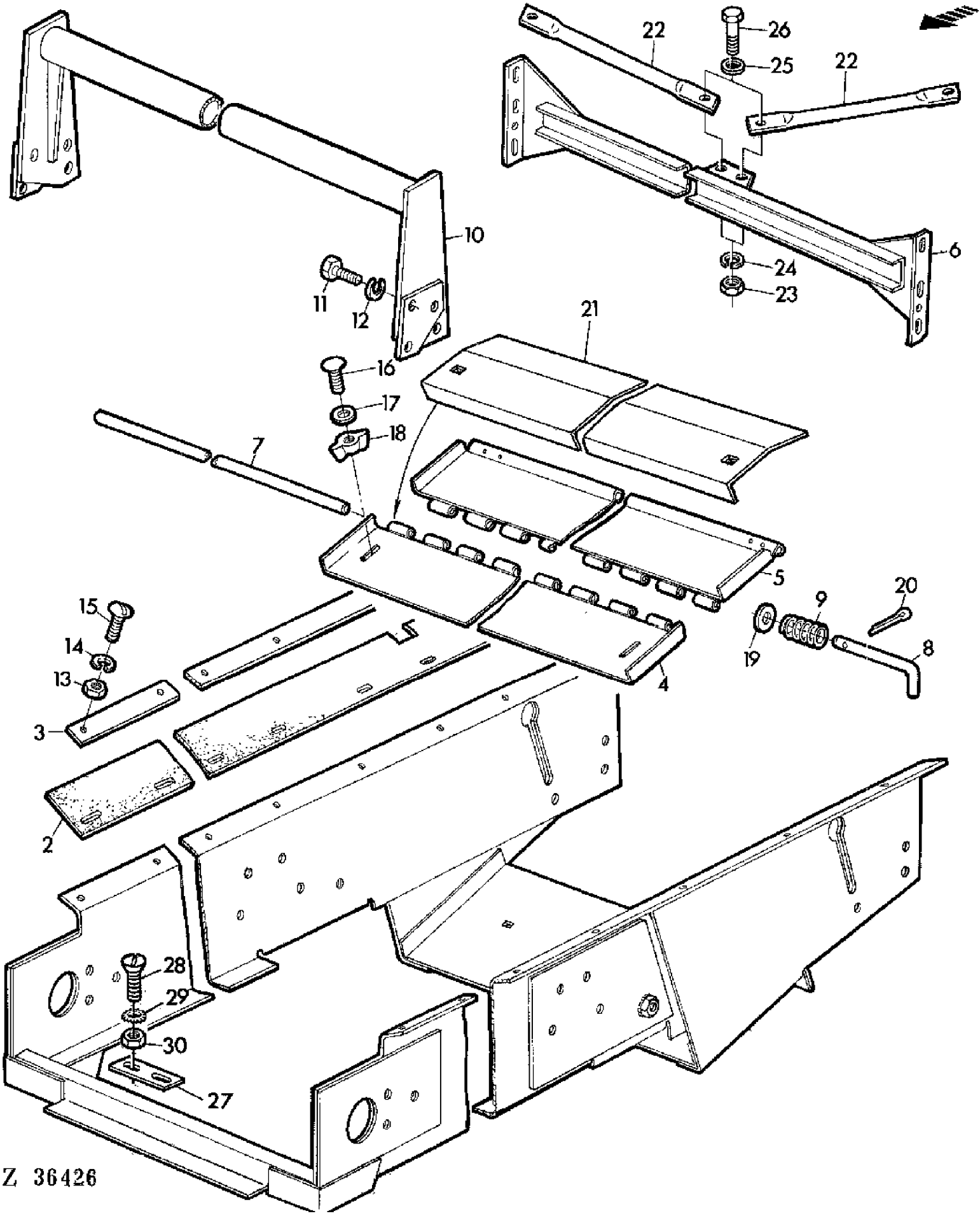

COPYRIGHT©1994 - 2008 DEERE & COMPANY Moline, Illinois All rights reserved

(4C22) LOWER CHAFFER BOARD
CAISSON SASSEUR
SCHUETTELKASTEN
CASSONE DI PULIZIA
CAJA DE CRIBAS
SALLADA

KEY	PART NO.	PART NAME	QTY	SERIAL NO.	975	975HY/4	REMARKS
1	AZ29243	COMBINE SHOE	1		X	X	(SUB FOR AZ27939)
2	Z33945	GASKET	2		X	X	
3	Z33933	REINFORCEMENT	2		X	X	
4	AZ13644	EXTENSION	1		X	X	
5	AZ20969	DOOR	1		X	X	
6	AZ28400	TUBE	1		X	X	(SUB FOR AZ23226)
7	Z23058	PIN	1		X	X	
8	Z36530	PIN	2		X	X	
9	Z20127	COMPRESSION SPRING	2		X	X	
10	AZ29301	SUPPORT	1		X	X	(SUB FOR AZ14076)
11	19M7162	CAP SCREW	AR		X	X	M8 X 16
12	12M7008	LOCK WASHER	AR		X	X	8 MM
13	14M7027	NUT	AR		X	X	M6
14	12M7012	LOCK WASHER	AR		X	X	6 MM
15	21M7031	SCREW	AR		X	X	M6 X 15
16	03M7160	BOLT	2		X	X	M8 X 35
17	24M7036	WASHER	2		X	X	9 MM
18	Z20285	WING NUT	2		X	X	8 MM
19	24M7096	WASHER	AR		X	X	10,5 MM
20	11M7013	COTTER PIN	2		X	X	3,2 X 20 MM
21	AZ25428	REINFORCEMENT	1		X	X	
22	Z39071	BRACE	2		X	X	
23	14M7039	NUT	4		X	X	M10
24	12M7013	LOCK WASHER	4		X	X	10 MM
25	24M7040	WASHER	4		X	X	11 MM
26	19M7167	CAP SCREW	4		X	X	M10 X 25
27	Z39723	GUIDE	2		X	X	
28	21M5525	SCREW	4		X	X	M5 X 16
29	12M7062	LOCK WASHER	AR		X	X	6 MM
30	14M7028	NUT	AR		X	X	M5

COPYRIGHT©1994 - 2008 DEERE & COMPANY Moline, Illinois All rights reserved

(4D17) LOWER FAN VARIATOR
VARIATEUR INFERIEUR DU VENTILATEUR
UNTERER GEBLAESEVARIATOR
VARIATORE INFERIORE DEL VENTILATORE
VARIADOR INFERIOR DEL VENTILADOR
FLAKTENS NEDRE VARIATOR

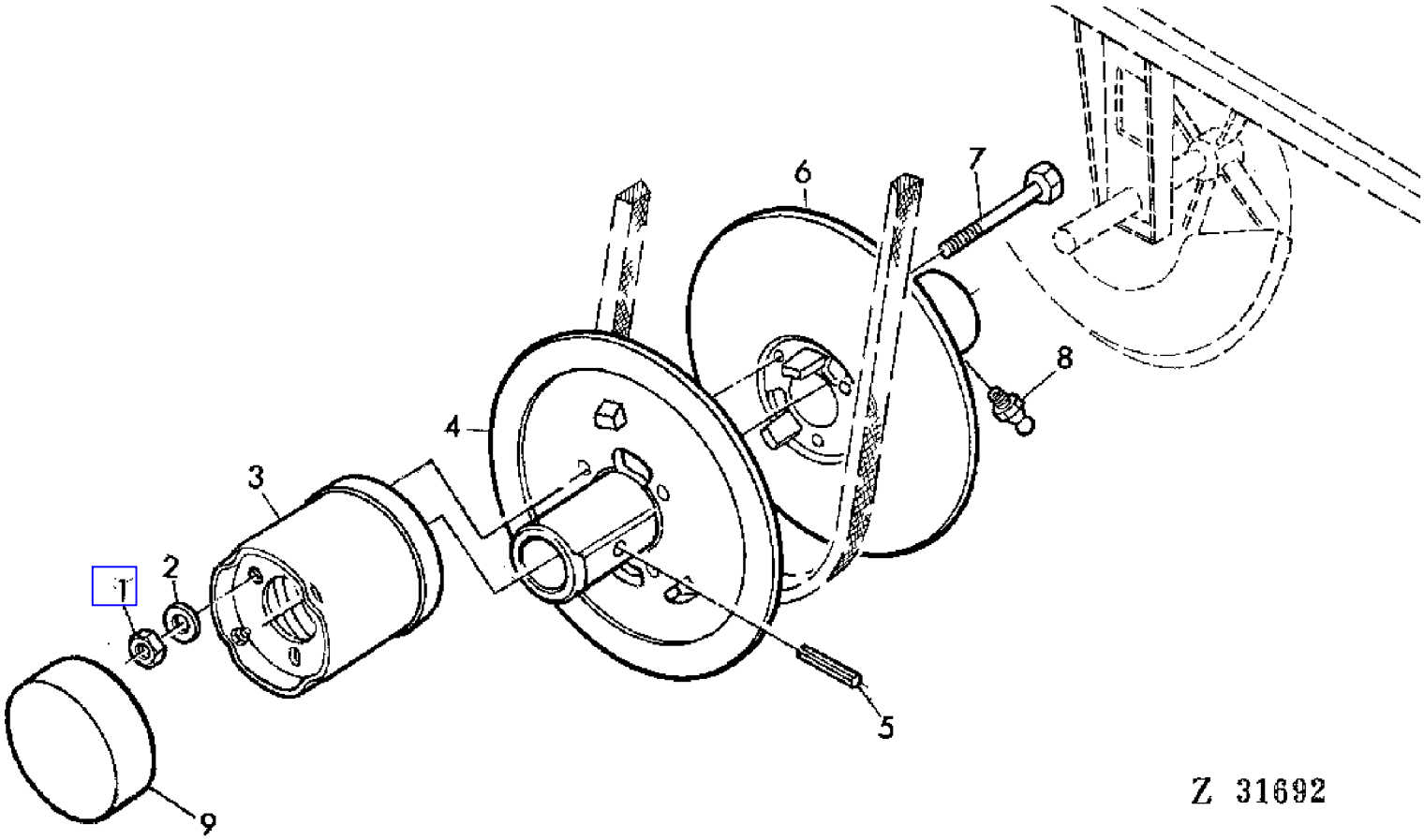

COPYRIGHT©1994 - 2008 DEERE & COMPANY Moline, Illinois All rights reserved

(4D17) LOWER FAN VARIATOR
VARIATEUR INFERIEUR DU VENTILATEUR
UNTERER GEBLAESEVARIATOR
VARIATORE INFERIORE DEL VENTILATORE
VARIADOR INFERIOR DEL VENTILADOR
FLAKTENS NEDRE VARIATOR

KEY	PART NO.	PART NAME	QTY	SERIAL NO.	975	975HY/4	REMARKS
1	14M7165	LOCK NUT	AR		X	X	M6
2	24M7088	WASHER	AR		X	X	6,6 MM
3	AZ10248	SPRING ASSEMBLY	1		X	X	
4	Z10079	HALF SHEAVE	1		X	X	
5	34M7054	SPRING PIN	AR		X	X	10 X 50 MM
6	Z10081	HALF SHEAVE	1		X	X	
7	Z30687	CAP SCREW	3		X	X	6 X 155 MM
8	58M7004	LUBRICATION FITTING	1		X	X	6 MM
9	Z38279	CAP	1		X	X	

COPYRIGHT©1994 - 2008 DEERE & COMPANY Moline, Illinois All rights reserved

(4G14) LOWER UNLOADING AUGER SUPPORT (LONG)
SUPPORT INFERIEUR DE GOULOTTE (LONGUE)
UNTERE ENTLEERROHRSTUETZE (LANG)
SUPPORTO INFERIORE DEL TUBO SCARICO DI GRANO (LUNGA)
SOPORTE INFERIOR DE LA MANGA DE DESCARGA (LARGA)
TOMNINGSSKRUVENS NEDRE STOD (LANG)

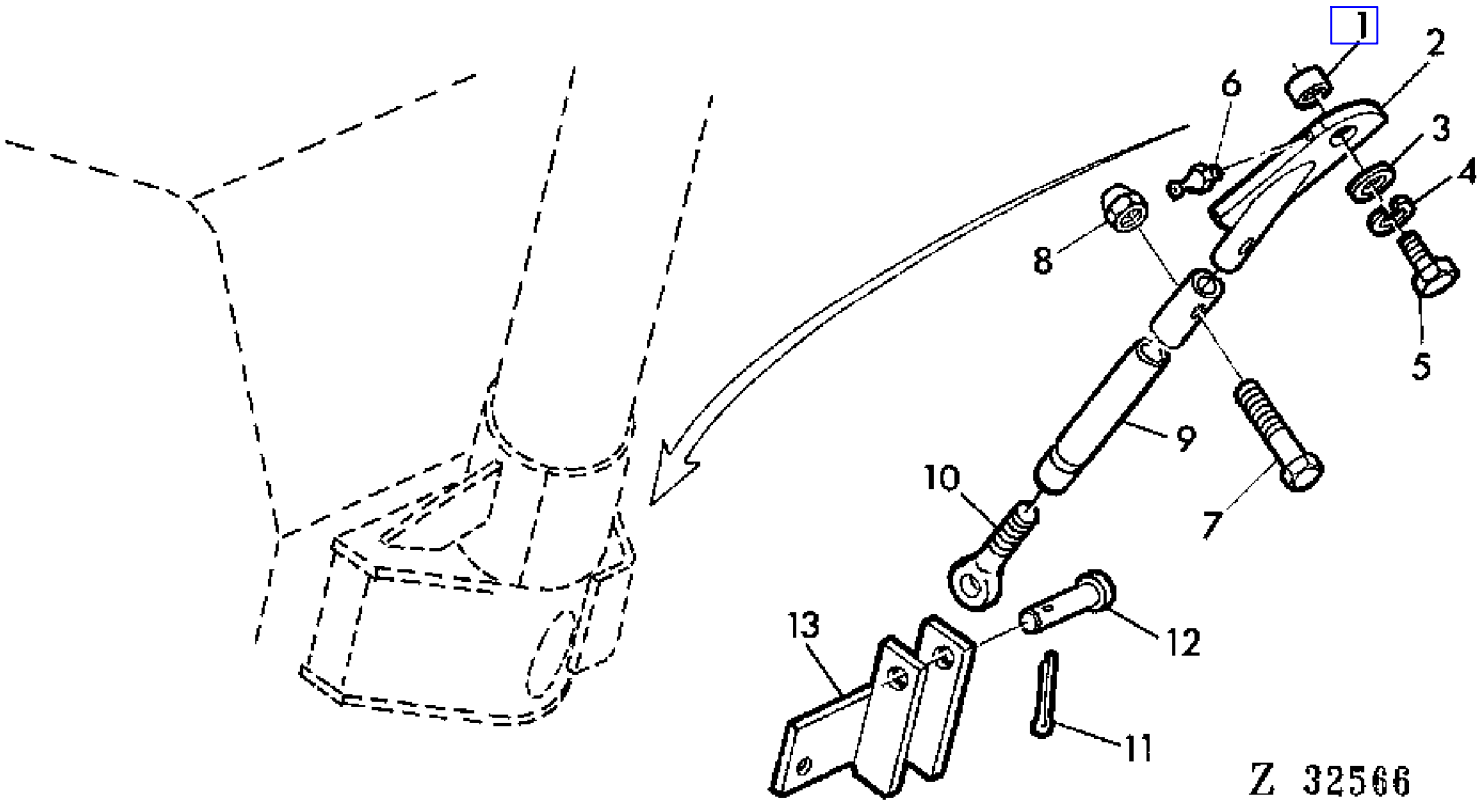

COPYRIGHT©1994 - 2008 DEERE & COMPANY Moline, Illinois All rights reserved

(4G14) LOWER UNLOADING AUGER SUPPORT (LONG)
SUPPORT INFERIEUR DE GOULOTTE (LONGUE)
UNTERE ENTLEERROHRSTUETZE (LANG)
SUPPORTO INFERIORE DEL TUBO SCARICO DI GRANO (LUNGA)
SOPORTE INFERIOR DE LA MANGA DE DESCARGA (LARGA)
TOMNINGSSKRUVENS NEDRE STOD (LANG)

KEY	PART NO.	PART NAME	QTY	SERIAL NO.	975	975HY	REMARKS
1	Z39135	SPACER	1		X	X	
2	AZ28471	HOLDER	1		X	X	
3	24M7113	WASHER	1		X	X	17 MM
4	12M7017	LOCK WASHER	1		X	X	16 MM
5	19M7283	CAP SCREW	1		X	X	M16 X 35
6	58M7004	LUBRICATION FITTING	1		X	X	
7	19M7330	CAP SCREW	1		X	X	M12 X 55
8	14M7168	LOCK NUT	1		X	X	M12
9	AZ29400	TUBE	1		X	X	
10	21M7186	EYEBOLT	1		X	X	M24 X 100
11	11M7029	COTTER PIN	1		X	X	5 X 36 MM
12	45M7025	PIN	1		X	X	22 X 11 X 53 X 60 MM
13	AZ29398	BRACKET	1		X	X	

COPYRIGHT©1994 - 2008 DEERE & COMPANY Moline, Illinois All rights reserved

(4B16) MECHANICAL TACHOMETER
COMPTE - TOURS MECANIQUE
MECHANISCHER DREHZAHLMESSER
CONTAGIRI MECANICO
CUENTARREVOLUCIONES MECANICO
MEKANISK VARVRAKNARE

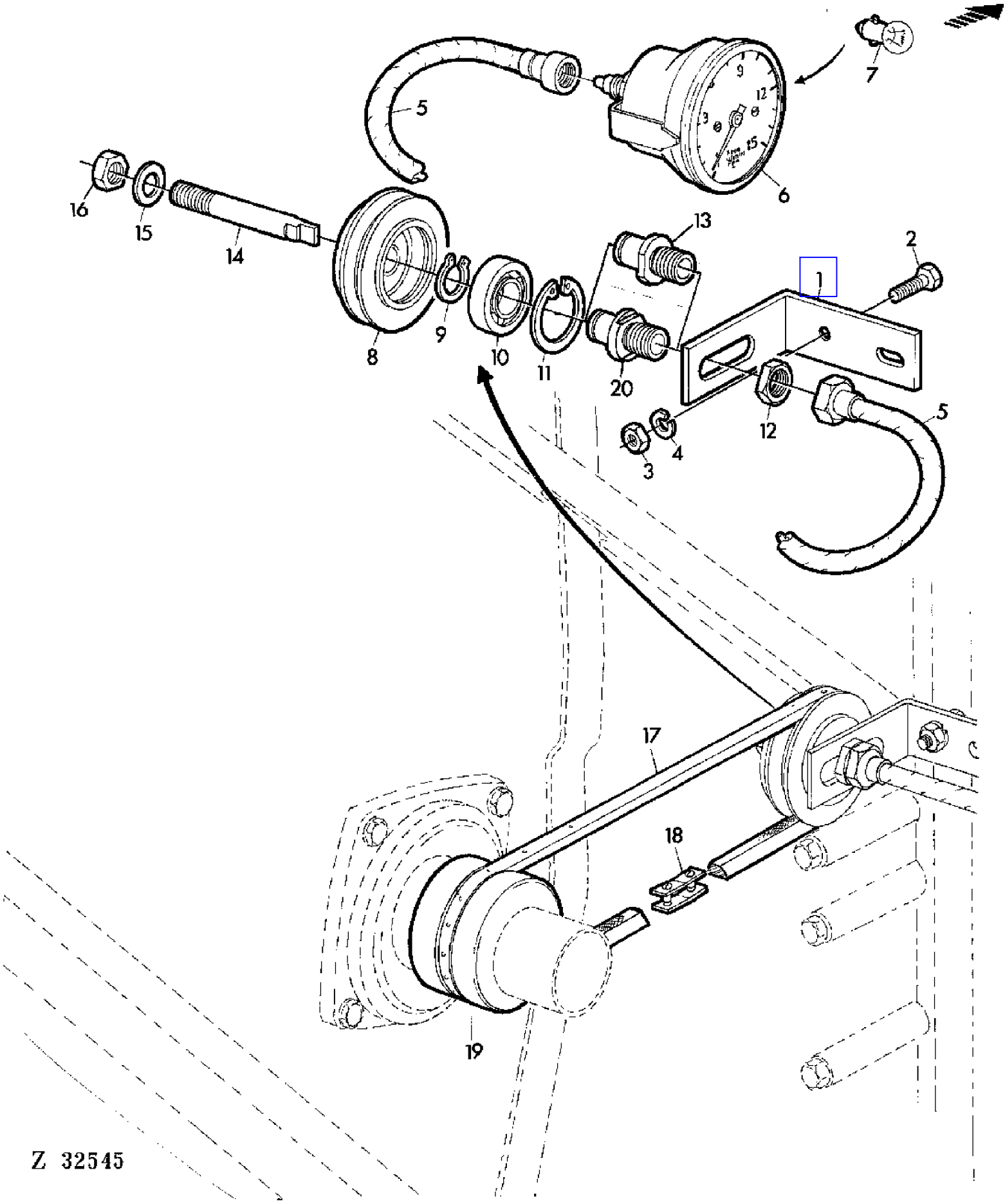

COPYRIGHT©1994 - 2008 DEERE & COMPANY Moline, Illinois All rights reserved

(4B16) MECHANICAL TACHOMETER
COMPTE - TOURS MECANIQUE
MECHANISCHER DREHZAHLMESSER
CONTAGIRI MECANICO
CUENTARREVOLUCIONES MECANICO
MEKANISK VARVRAKNARE

KEY	PART NO.	PART NAME	QTY	SERIAL NO.	975	975HY	REMARKS
1	Z39820	HOLDER	1		X	X	(SUB FOR AZ23188)
2	19M7284	CAP SCREW	1		X	X	M8 X 18
3	14M7029	NUT	1		X	X	M8
4	12M7008	LOCK WASHER	1		X	X	8 MM
5	AZ19599	CABLE	1		X	X	
6	AZ23047	TACHOMETER	1		X	X	
7	57M6343	BULB	1		X	X	12V 2W
8	AZ18152	PULLEY	1		X	X	
9	40M1825	SNAP RING	1		X	X	20 X 1,2 MM
10	JD30071	BALL BEARING	1		X	X	
11	40M1863	SNAP RING	1		X	X	47 X 1,75 MM
12	14M7161	NUT	1		X	X	M22 X 1,5
13	Z22793	BUSHING	1	- 025057	X	X	
14	Z22794	SHAFT	1		X	X	
15	24M7028	WASHER	1		X	X	10,5 MM
16	14M7148	NUT	1		X	X	M10 X 1
17	Z31867	BELT	1		X	X	
18	AZ20532	LINK	1		X	X	
19	Z10766	PULLEY	1		X	X	
20	Z39818	UNION FITTING	1	025058 -	X	X	

COPYRIGHT©1994 - 2008 DEERE & COMPANY Moline, Illinois All rights reserved

(1H16) MOTOR PULLEY
POULIE DE SORTIE-MOTEUR
MOTOR-RIEMENSCHEIBE
PULEGGIA DEL MOTORE
POLEA DEL MOTOR
MOTORDRIVSKIVA

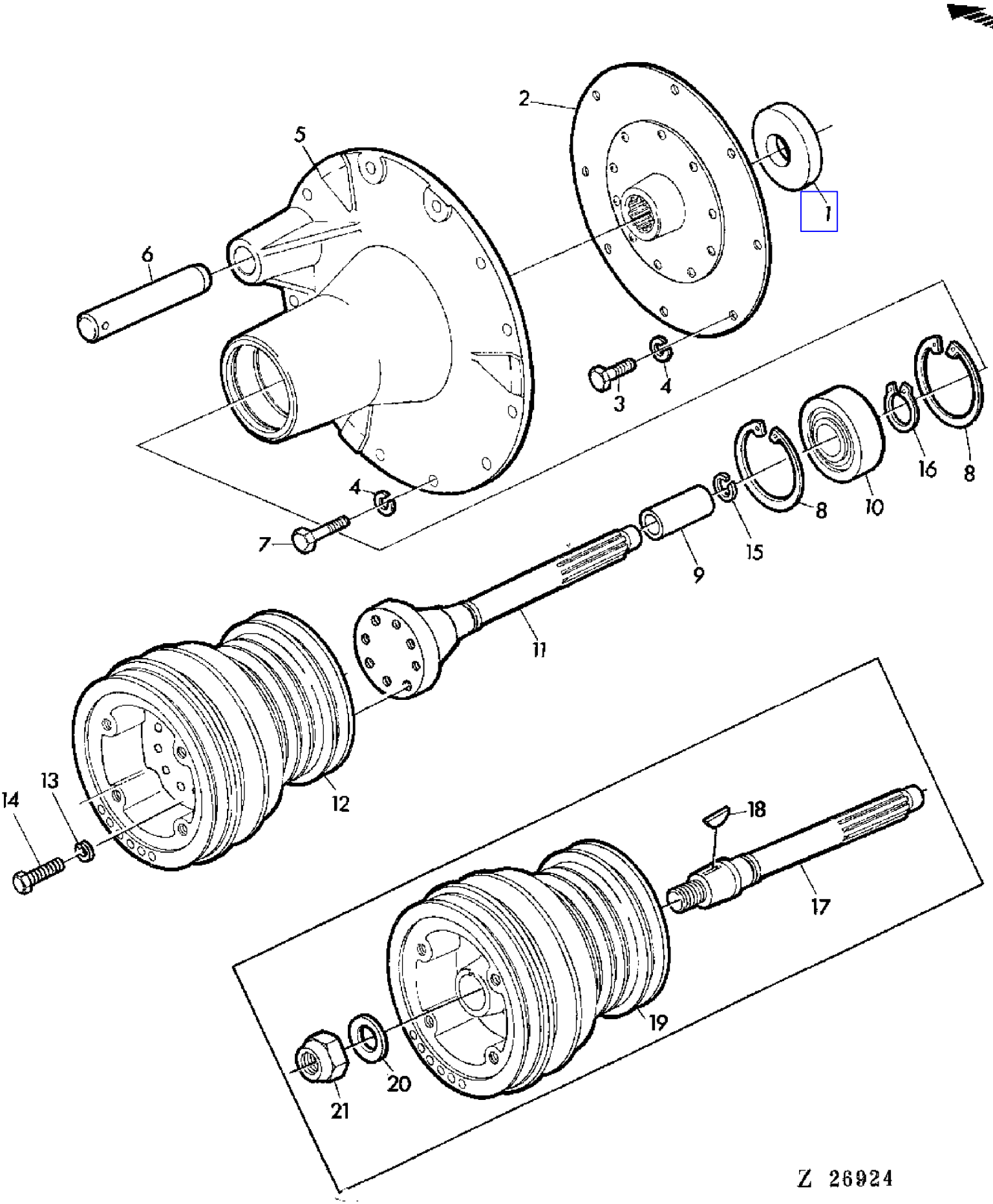

COPYRIGHT©1994 - 2008 DEERE & COMPANY Moline, Illinois All rights reserved

(1H16) MOTOR PULLEY
POULIE DE SORTIE-MOTEUR
MOTOR-RIEMENSCHEIBE
PULEGGIA DEL MOTORE
POLEA DEL MOTOR
MOTORDRIVSKIVA

KEY	PART NO.	PART NAME	QTY	SERIAL NO.		975	975HY/4	REMARKS
1	Z21392	DISK	1			X	X	
2	AZ22756	DISK	1			X	X	
3	19H1936	CAP SCREW	8			X	X	3/8" X 3/4"
4	12M7013	LOCK WASHER	AR			X	X	10 MM
5	Z11174	HOUSING	1				X	
	Z10904	HOUSING	1			X		
6	Z33851	PIN	1			X	X	
7	19H1731	CAP SCREW	12			X	X	3/8" X 1"
8	40M1873	SNAP RING	2			X		90 X 3 MM
	40M1874	SNAP RING	2				X	100 X 3 MM
9	Z38618	SPACER	1	017018	-	X		
10	AP19769	BALL BEARING	1			X		
	JD10052	BALL BEARING	1				X	
11	Z37189	SHAFT	1	012782	- 017017	X		(ORD Z11407, Z38618, 40M7073)
	Z11407	SHAFT	1	017018	-	X		(SUB FOR Z38619)
	Z11409	SHAFT	1				X	(SUB FOR Z37993)
12	Z11107	PULLEY	1	012782	-	X		
	Z11143	PULLEY	1				X	
13	12M7014	LOCK WASHER	8	012782	-	X	X	12 MM
14	19M7073	CAP SCREW	8	012782	-	X	X	M12 X 50
15	40M7073	SNAP RING	1	017018	-	X		40 X 2,5 MM
16	40M1835	SNAP RING	1		- 017017	X		40 X 1,75 MM
	40M1837	SNAP RING	1				X	45 X 1,75 MM
17	Z33850	SHAFT	1		- 012781	X		(ORD Z38618, Z38620, 40M7073)
	Z38620	SHAFT	1		- 012781	X		(SUB FOR Z33850)
18	26M7000	SHAFT KEY	1		- 012781	X		10 X 16 MM
19	Z10906	PULLEY	1		- 012781	X		
20	24M7092	WASHER	1		- 012781	X		33 MM
21	14M7176	LOCK NUT	1		- 012781	X		M30 X 2

COPYRIGHT©1994 - 2008 DEERE & COMPANY Moline, Illinois All rights reserved

(3C05) MOUNTING PARTS
DIECES DE MONTAGE
ANBAUTEILE
PARTI DI MANTAGGIO
PIEZAS DE MONTAJE
MONTERINGSDTALJER

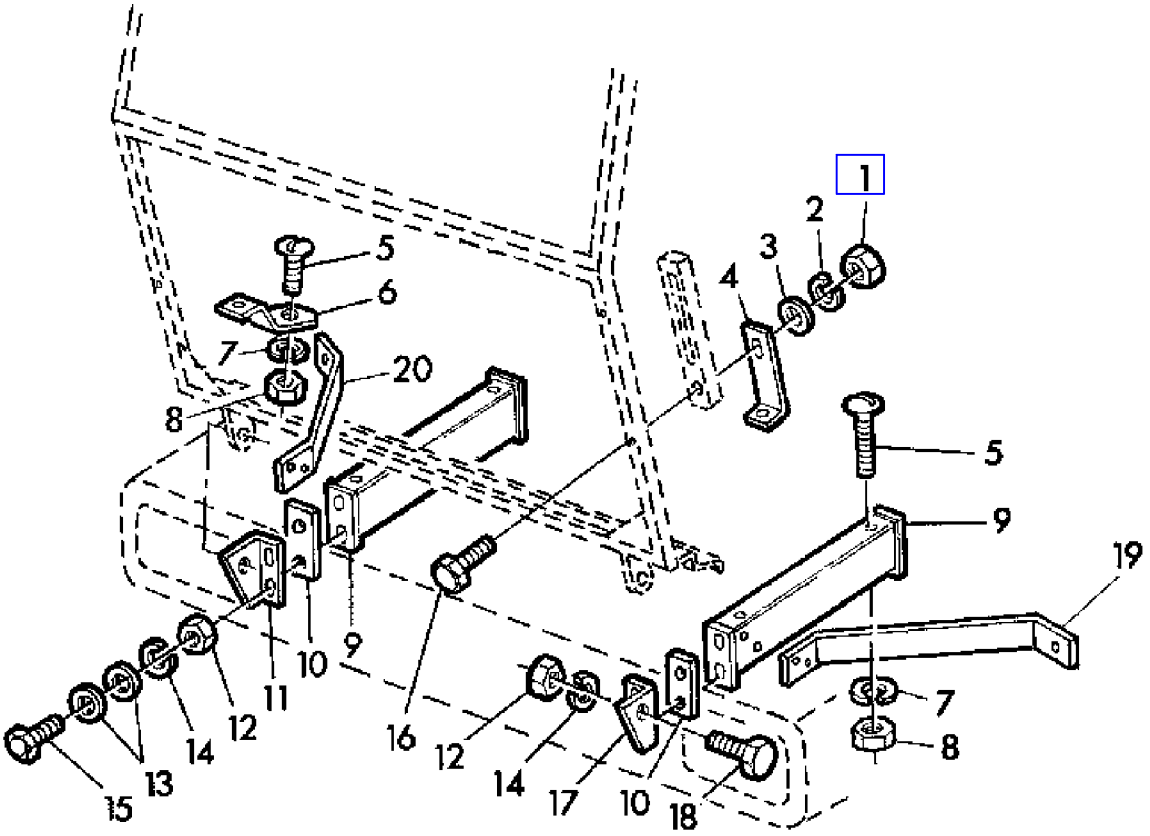

Z 36450

COPYRIGHT©1994 - 2008 DEERE & COMPANY Moline, Illinois All rights reserved

(3C05) MOUNTING PARTS
DIECES DE MONTAGE
ANBAUTEILE
PARTI DI MANTAGGIO
PIEZAS DE MONTAJE
MONTERINGSDTALJER

KEY	PART NO.	PART NAME	QTY	SERIAL NO.	975	975HY/4	REMARKS
1	14M7027	NUT	13		X	X	M6
2	12M7012	LOCK WASHER	13		X	X	6 MM
3	24M7088	WASHER	4		X	X	6,6 MM
4	CA19467	SUPPORT	1		X	X	
5	21M7081	SCREW	5		X	X	M8 X 15
6	CA19468	HOLDER	1		X	X	
7	12M7008	LOCK WASHER	5		X	X	8 MM
8	14M7029	NUT	5		X	X	M8
9	DA19459	SUPPORT	2		X	X	
10	CA19961	STRAP	AR		X	X	
11	CA19462	HOLDER	1		X	X	RH
12	14M7140	NUT	8		X	X	M10
13	24M7040	WASHER	8		X	X	11 MM
14	12M7013	LOCK WASHER	8		X	X	10 MM
15	19M7168	CAP SCREW	4		X	X	M10 X 30
16	19M7689	CAP SCREW	4		X	X	M6 X 80
17	CA19463	HOLDER	1		X	X	LH
18	19M7167	CAP SCREW	4		X	X	M10 X 25
19	Z38602	BRACE	1		X	X	
20	Z38603	BRACE	1		X	X	

COPYRIGHT©1994 - 2008 DEERE & COMPANY Moline, Illinois All rights reserved

(3C08) MOUNTING PARTS
PIECES DE MONTAGE
ANBAUTEILE
PARTI DI MANTAGGIO
PIEZAS DE MONTAJE
MONTERINGSDETALJER

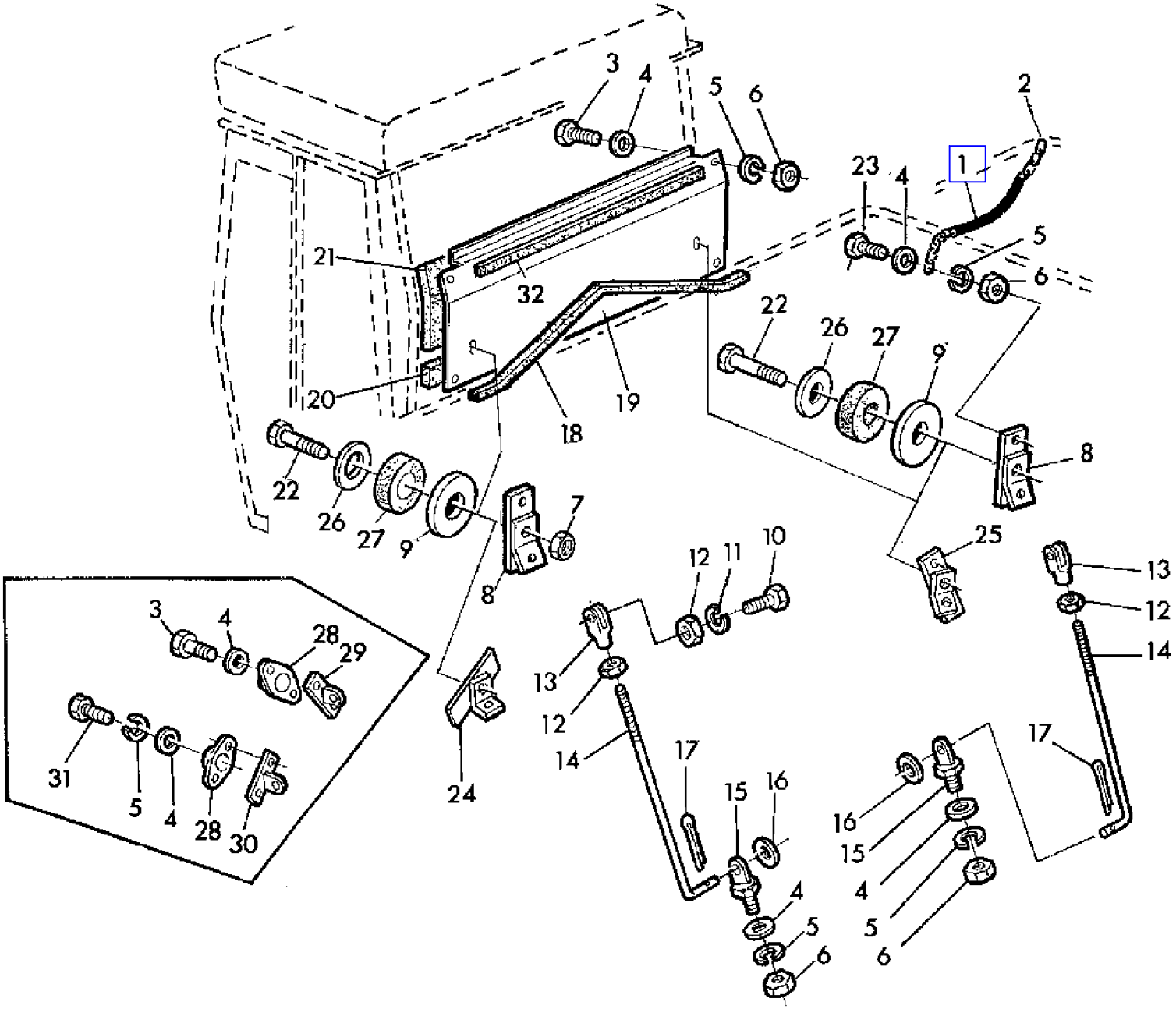

Z 31580

COPYRIGHT©1994 - 2008 DEERE & COMPANY Moline, Illinois All rights reserved

(3C08) MOUNTING PARTS
PIECES DE MONTAGE
ANBAUTEILE
PARTI DI MANTAGGIO
PIEZAS DE MONTAJE
MONTERINGSDETALJER

KEY	PART NO.	PART NAME	QTY	CAB SERIAL NO.		975	975HY/4	REMARKS
1	CA22363	GUARD	1			X	X	
2	CA22364	LINK CHAIN	1			X	X	
3	19M7167	CAP SCREW	8			X	X	M10 X 25
4	24M7040	WASHER	8			X	X	11 MM
5	12M7013	LOCK WASHER	12			X	X	10 MM
6	14M7140	NUT	10			X	X	M10
7	14M7167	LOCK NUT	2				X	M10
8	AZ27164	HOLDER	1				X	
9	H78856	RETAINER	2	K1317Z	-	X	X	
10	19M7387	CAP SCREW	2			X	X	M12 X 40
11	12M7014	LOCK WASHER	2			X	X	12 MM
12	14M7031	NUT	4			X	X	M12
13	Z24493	YOKE	2			X	X	
14	CA19465	HOOK BOLT	2			X	X	
15	DA19456	EYEBOLT	2			X	X	
16	24M7038	WASHER	2			X	X	14 MM
17	11M7021	COTTER PIN	2			X	X	4 X 25 MM
18	CA19500	WEATHERSTRIP	1			X	X	LGTH = 1360 MM (30 X 30 MM)
19	DA19664	SHEET	1		- K1316Z	X		
	DA22484	SHEET	1	K1317Z	-	X	X	
20	CA19718	BARRIER	1			X	X	
21	CA19599	BARRIER	1		- K1316Z	X		
	CA22493	BARRIER	1	K1317Z	-	X	X	
22	19M7668	CAP SCREW	2	K1317Z	-	X	X	M10 X 100
23	19M7381	CAP SCREW	4	K1317Z	-	X	X	M10 X 28
24	DA23409	SUPPORT	1	K1317Z	-	X	X	
25	DA23408	SUPPORT	1	K1317Z	-	X	X	
26	Z38112	WASHER	2	K1317Z	-	X	X	
27	H80197	BUSHING	2	K1317Z	-	X	X	
28	DA19469	STOP	2		- K1316Z	X		
29	DA19722	BRACKET	1		- K1316Z	X		RH
30	DA19464	HOLDER	1		- K1316Z	X		LH
31	19M7183	CAP SCREW	2		- K1316Z	X		M10 X 40
32	CA22488	WEATHERSTRIP	1	K1317Z	-	X	X	

COPYRIGHT©1994 - 2008 DEERE & COMPANY Moline, Illinois All rights reserved

(1D04) MUFFLER
SILENCIEUX
SCHALLDAEMPFER
SILENZIATORE
SILENCIADOR
LJUDDAMPARE

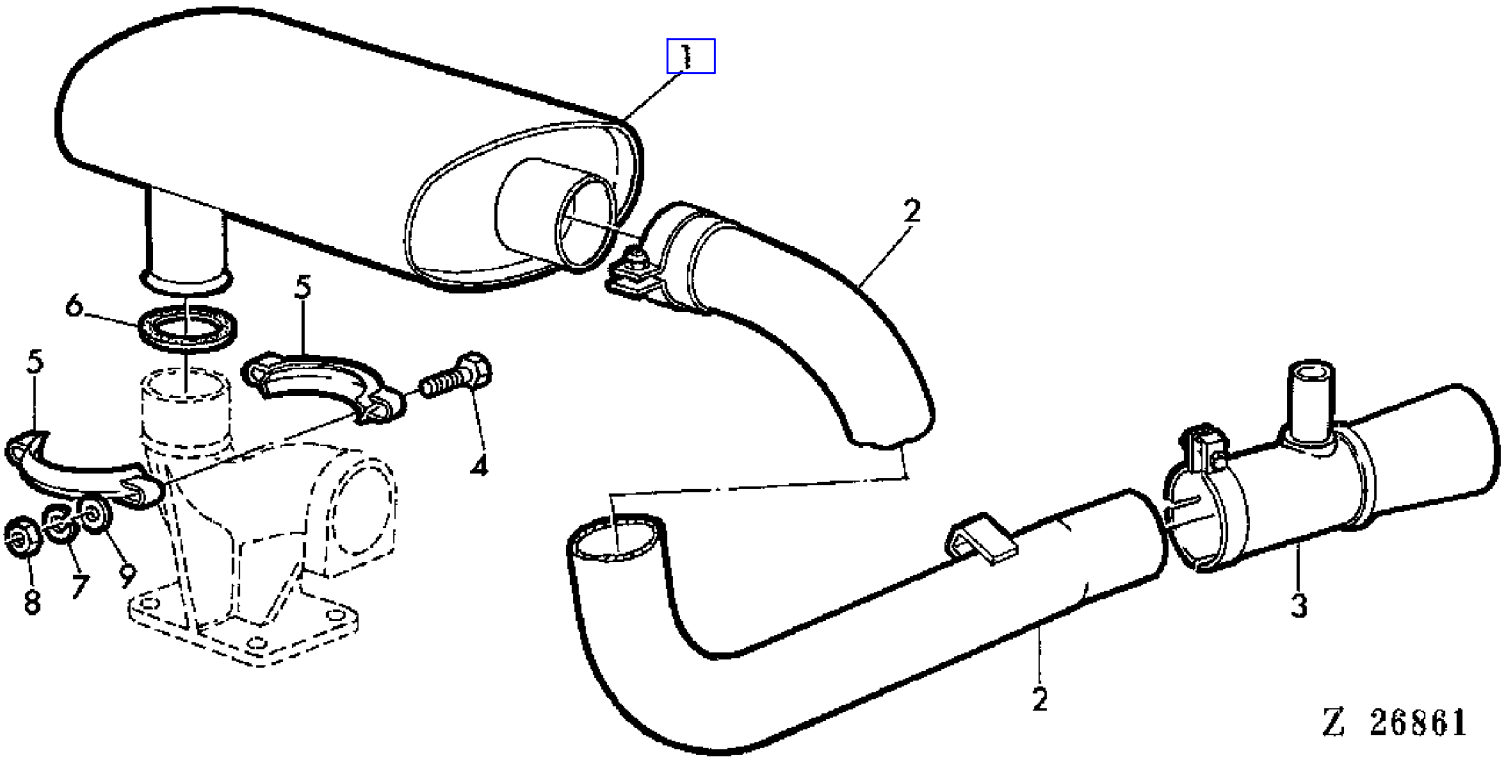

COPYRIGHT©1994 - 2008 DEERE & COMPANY Moline, Illinois All rights reserved

(1D04) MUFFLER
SILENCIEUX
SCHALLDAEMPFER
SILENZIATORE
SILENCIADOR
LJUDDAMPARE

KEY	PART NO.	PART NAME	QTY	SERIAL NO.		975	975HY	REMARKS
1	AZ26097	MUFFLER	1	015188	-	X	X	
2	AZ25962	PIPE	1	015188	-	X	X	
3	AZ30765	EJECTOR	1	015188	-	X	X	(SUB FOR AZ26208)
4	19M7327	CAP SCREW	2			X	X	M10 X 65
5	AT29268	CLAMP	2			X	X	
6	R31142	SEALING WASHER	1			X	X	
7	12M7013	LOCK WASHER	2			X	X	10 MM
8	14M7140	NUT	2			X	X	M10
9	24M7040	WASHER	2			X	X	11 MM

COPYRIGHT©1994 - 2008 DEERE & COMPANY Moline, Illinois All rights reserved

(4B14) MULTI "V" BELT GUIDES
GUIDE DE COURROIE TRAPEZOIDALE
MEHRFACHKEILRIEMENFUEHRUNG
GUIDA PER CINGHIA TRAPEZOIDALE MULTIPLA
GUIAS DE CORREAS TRAPEZOIDALES MULTIPLES
STYRNING FOR MULTIPLEKILREMMAR

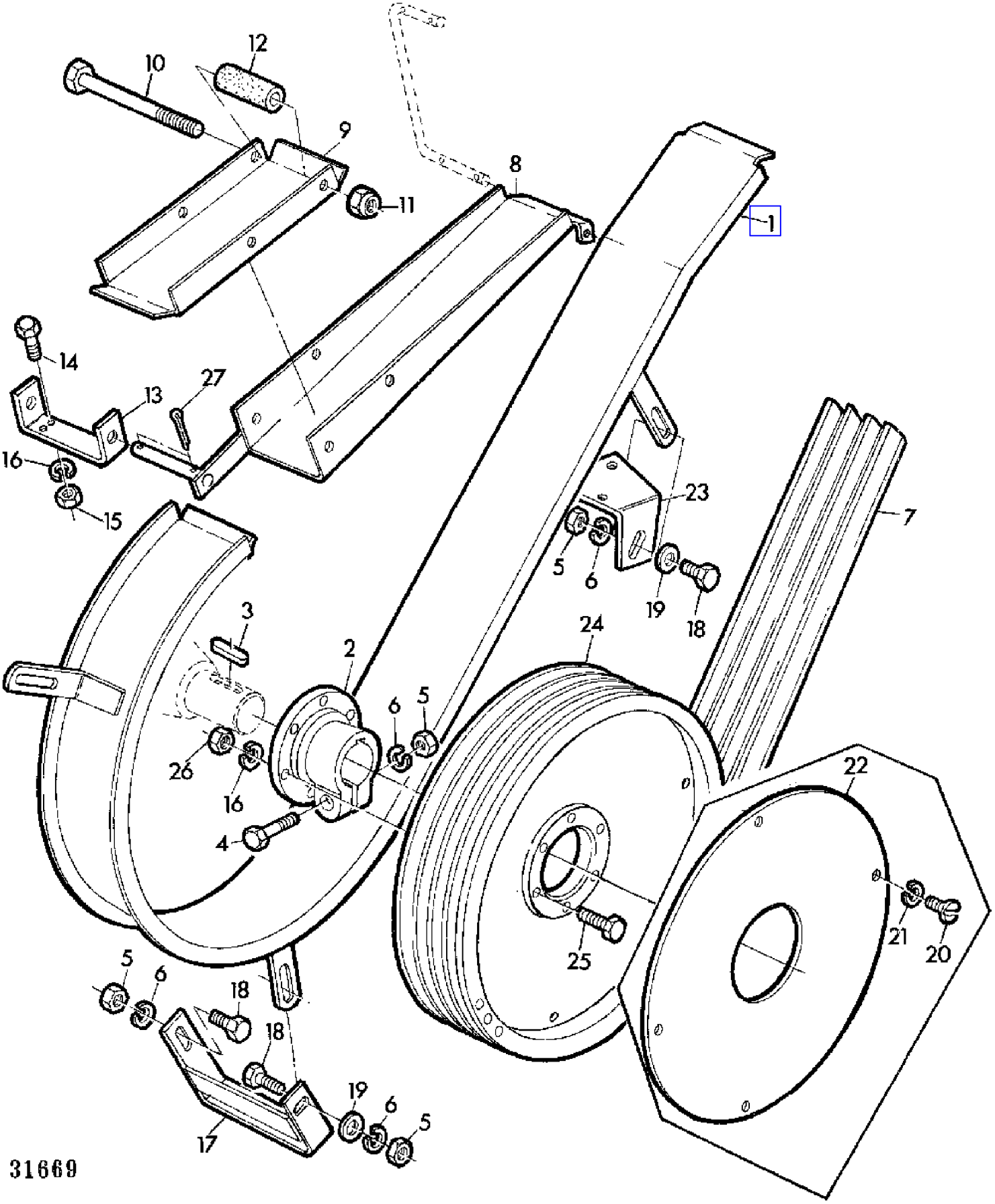

COPYRIGHT©1994 - 2008 DEERE & COMPANY Moline, Illinois All rights reserved

(4B14) MULTI "V" BELT GUIDES
GUIDE DE COURROIE TRAPEZOIDALE
MEHRFACHKEILRIEMENFUEHRUNG
GUIDA PER CINGHIA TRAPEZOIDALE MULTIPLA
GUIAS DE CORREAS TRAPEZOIDALES MULTIPLES
STYRNING FOR MULTIPLEKILREMMAR

KEY	PART NO.	PART NAME	QTY	SERIAL NO.	975	975HY/4	REMARKS
1	AZ22728	GUIDE	1		X	X	
2	Z10743	HUB	1		X	X	
3	49M7018	SHAFT KEY	1		X	X	12 X 8 X 140 MM
4	19M7327	CAP SCREW	1		X	X	M10 X 65
5	14M7140	NUT	AR		X	X	M10
6	12M7013	LOCK WASHER	AR		X	X	10 MM
7	Z33790	BELT	1		X	X	
8	AZ22729	GUIDE	1		X	X	
9	Z33799	GUIDE	1		X	X	
10	19M7638	CAP SCREW	2		X	X	M10 X 130
11	14M7167	LOCK NUT	2		X	X	M10
12	Z31640	BUSHING	2		X	X	
13	Z33796	SUPPORT	1		X	X	
14	19M7163	CAP SCREW	2		X	X	M8 X 25
15	14M7151	NUT	2		X	X	M8
16	12M7008	LOCK WASHER	AR		X	X	8 MM
17	AZ21631	HOLDER	1		X	X	
18	19M7167	CAP SCREW	AR		X	X	M10 X 25
19	24M7106	WASHER	AR		X	X	10 MM
20	21M7083	SCREW	4	- 006255	X		M6 X 10
21	12M7012	LOCK WASHER	4	- 006255	X		6 MM
22	Z34437	GUARD	1	- 006255	X		
23	Z34436	HOLDER	1		X	X	
24	Z10957	SHEAVE	1		X	X	
25	19M7301	CAP SCREW	6		X	X	M8 X 40
26	14M7029	NUT	6		X	X	M8
27	11M7013	COTTER PIN	2		X	X	3,2 X 18 MM

COPYRIGHT©1994 - 2008 DEERE & COMPANY Moline, Illinois All rights reserved

(1H10) OIL COOLER
REFROIDISSEUR D'HUILE
OELKUEHLER
REFRIGATORE D'OLIO
REFRIGERADOR DE ACEITE
OLJEKYLARE

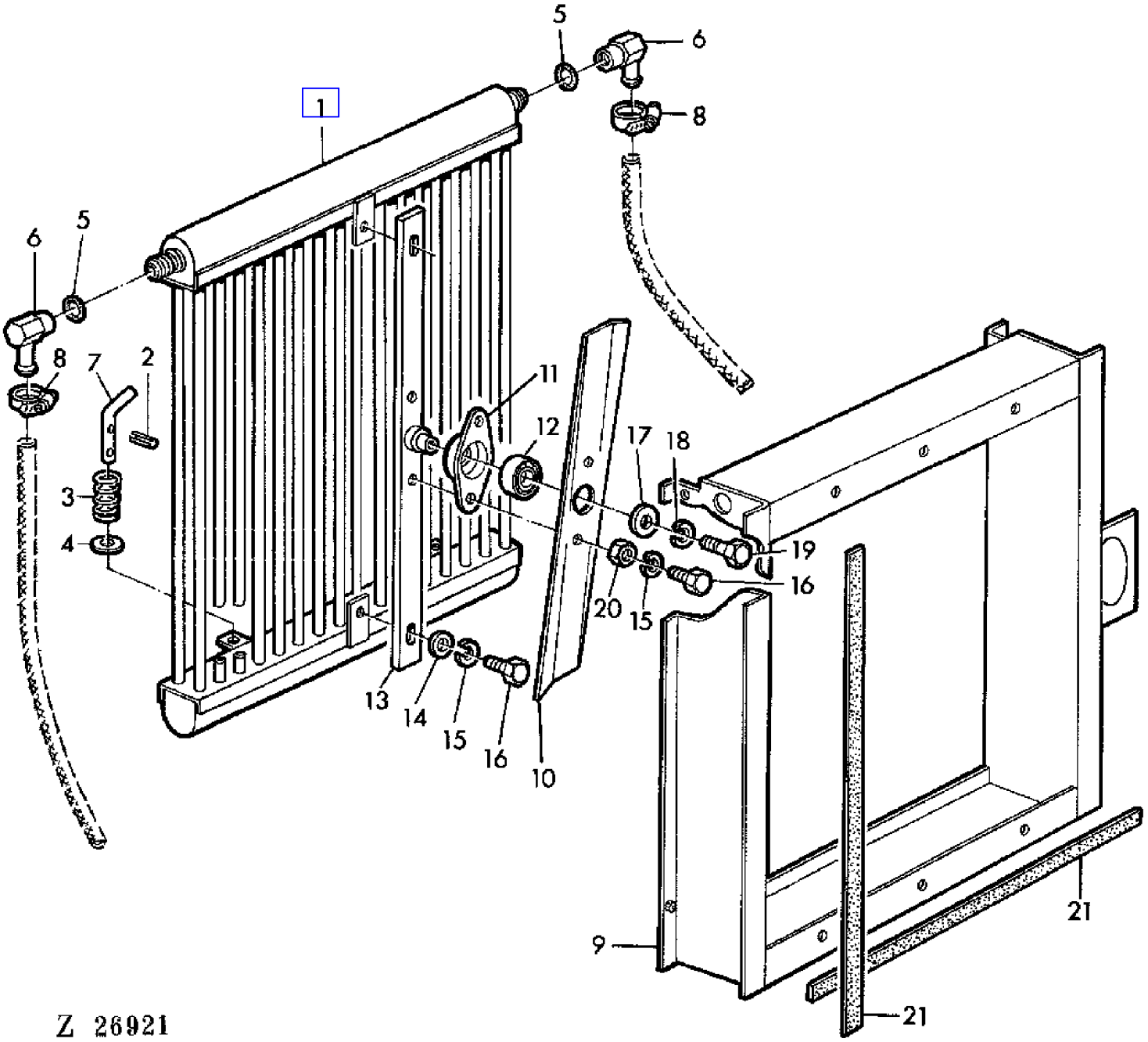

COPYRIGHT©1994 - 2008 DEERE & COMPANY Moline, Illinois All rights reserved

(1H10) OIL COOLER
REFROIDISSEUR D'HUILE
OELKUEHLER
REFRIGATORE D'OLIO
REFRIGERADOR DE ACEITE
OLJEKYLARE

KEY	PART NO.	PART NAME	QTY	SERIAL NO.	975	975HY/4	REMARKS
1	AZ34453	OIL COOLER	1			X	(SUB FOR AZ28524)
2	34M7010	SPRING PIN	4			X	M3 X 18
3	289SEL	SPRING	2			X	
4	24M7036	WASHER	2			X	9 MM
5	F3171R	O-RING	2			X	
6	AZ28518	ELBOW FITTING	2			X	
7	Z37547	PIN	2			X	
8	Z26822	CLAMP	2			X	
9	AZ27982	FRAME	1			X	
10	Z37194	FAN BLADE	1			X	
11	Z33854	PRESSED FLANGED HOUSING	1			X	
12	JD29980	BALL BEARING	1			X	
13	AZ26445	RETAINER	1			X	
14	24M7054	WASHER	AR			X	6,4 MM
15	12M7012	LOCK WASHER	AR			X	6 MM
16	19M7286	CAP SCREW	2			X	M6 X 25
17	24M7024	WASHER	1			X	9,5 MM
18	12M7008	LOCK WASHER	AR			X	8 MM
19	19M7139	CAP SCREW	1			X	M8 X 20
20	14M7027	NUT	AR			X	M6
21	Z37171	WEATHERSTRIP	8			X	

COPYRIGHT©1994 - 2008 DEERE & COMPANY Moline, Illinois All rights reserved

(2E04) OIL LINES (CLUTCH)
CANALISATIONS D'HUILE (EMBRAYAGE)
OELLEITUNGEN (KUPPLUNG)
TUBAZIONI D'OLIO (FRIZIONE)
TUBERIAS DE ACEITE (EMBRAGUE)
OLJELEDNINGAR (KOPPLING)

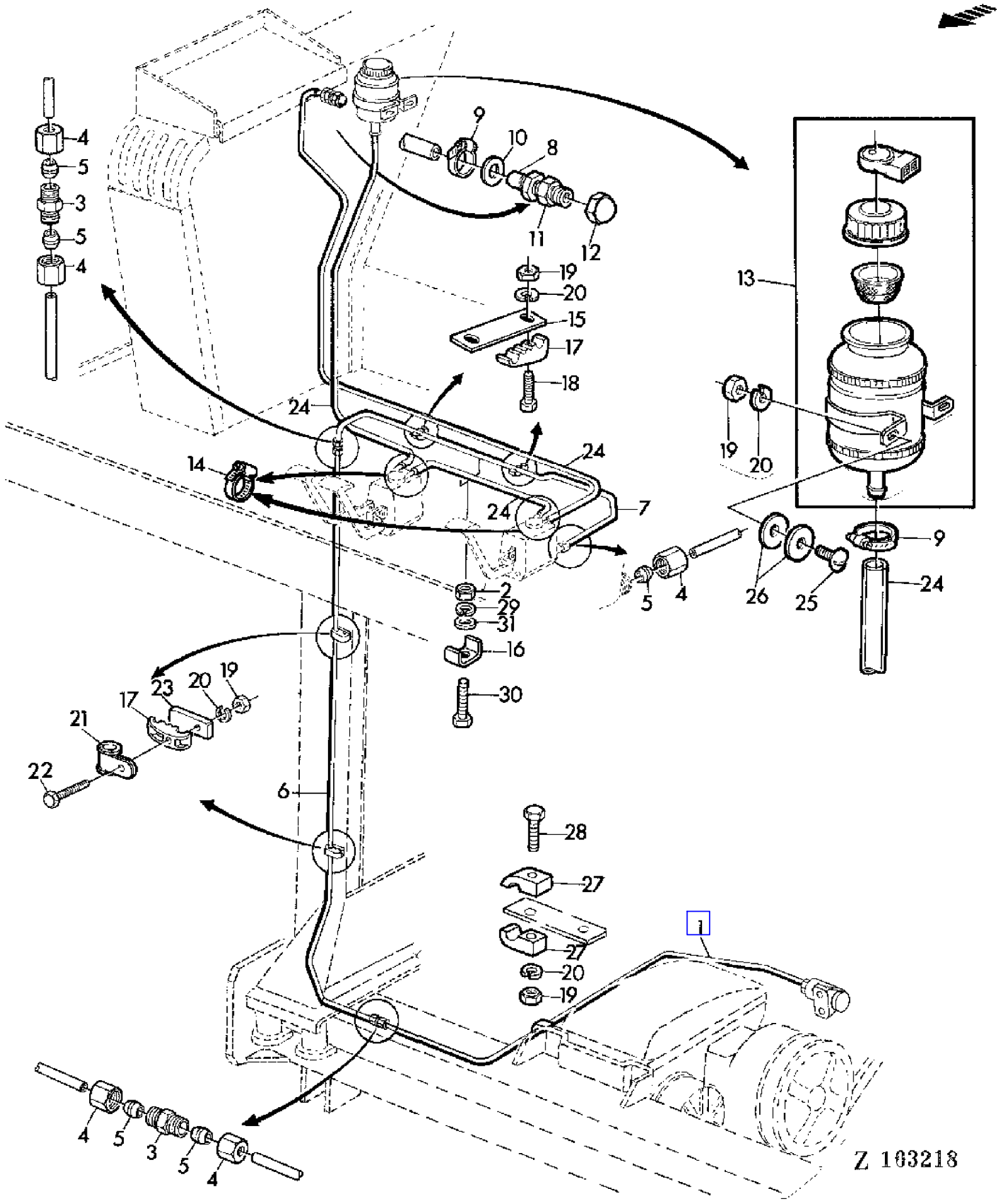

COPYRIGHT©1994 - 2008 DEERE & COMPANY Moline, Illinois All rights reserved

(2E04) OIL LINES (CLUTCH)
CANALISATIONS D'HUILE (EMBRAYAGE)
OELLEITUNGEN (KUPPLUNG)
TUBAZIONI D'OLIO (FRIZIONE)
TUBERIAS DE ACEITE (EMBRAGUE)
OLJELEDNINGAR (KOPPLING)

KEY	PART NO.	PART NAME	QTY	SERIAL NO.	975	975HY/4	REMARKS
1	AZ23960	OIL LINE	1		X		
2	14M7028	NUT	AR		X		M5
3	Z32960	COUPLING	2		X		
4	Z32974	TUBE NUT	6		X		
5	Z32995	SLEEVE FITTING	6		X		
6	AZ23976	OIL LINE	1		X		
7	AZ23948	OIL LINE	1		X		
8	Z33654	FITTING	1		X	X	
9	Z28856	CLAMP	2		X	X	
10	12M7008	LOCK WASHER	1		X	X	8 MM
11	14M7202	NUT	1		X	X	M8
12	14M7235	NUT	1		X	X	M8 X 1
13	AZ22695	OIL CUP	1		X	X	
14	Z40671	CLAMP	AR		X	X	
15	Z34959	STRAP	2		X		
16	Z30603	CLAMP	AR		X		
17	Z30668	CLAMP	2		X		
18	19M7177	CAP SCREW	AR		X		M6 X 35
19	14M7027	NUT	AR		X	X	M6
20	12M7012	LOCK WASHER	AR		X	X	6 MM
21	Z22067	CLAMP	AR		X		
22	19M7547	CAP SCREW	AR		X		M6 X 55
23	Z30667	PLATE	2		X		
24	Z34641	HOSE	AR		X		
25	21M7127	SCREW	2		X	X	M6 X 18
26	24M7100	WASHER	4		X	X	7 MM
27	Z34861	CLAMP	2		X		
28	19M7320	CAP SCREW	AR		X		M6 X 40
29	12M7011	LOCK WASHER	AR		X		5 MM
30	19M7317	SCREW	AR		X		M5 X 30
31	24M7027	WASHER	AR		X		5,3 MM

COPYRIGHT©1994 - 2008 DEERE & COMPANY Moline, Illinois All rights reserved

(1H08) OIL LINES AND GROUND SPEED CONTROL CABLE
CONDUITES ET CABLE DE COMMANDE
LEITUNGEN UND FERNBETAETIGUNG
LINEE OLIO E CAVI DI COMANDO A DISTANZA
TUBERIAS DE ACEITE Y CABLES DE MANDO A DISTANCIA
LEDNINGAR OCH FJARRKONTROLLKABEL

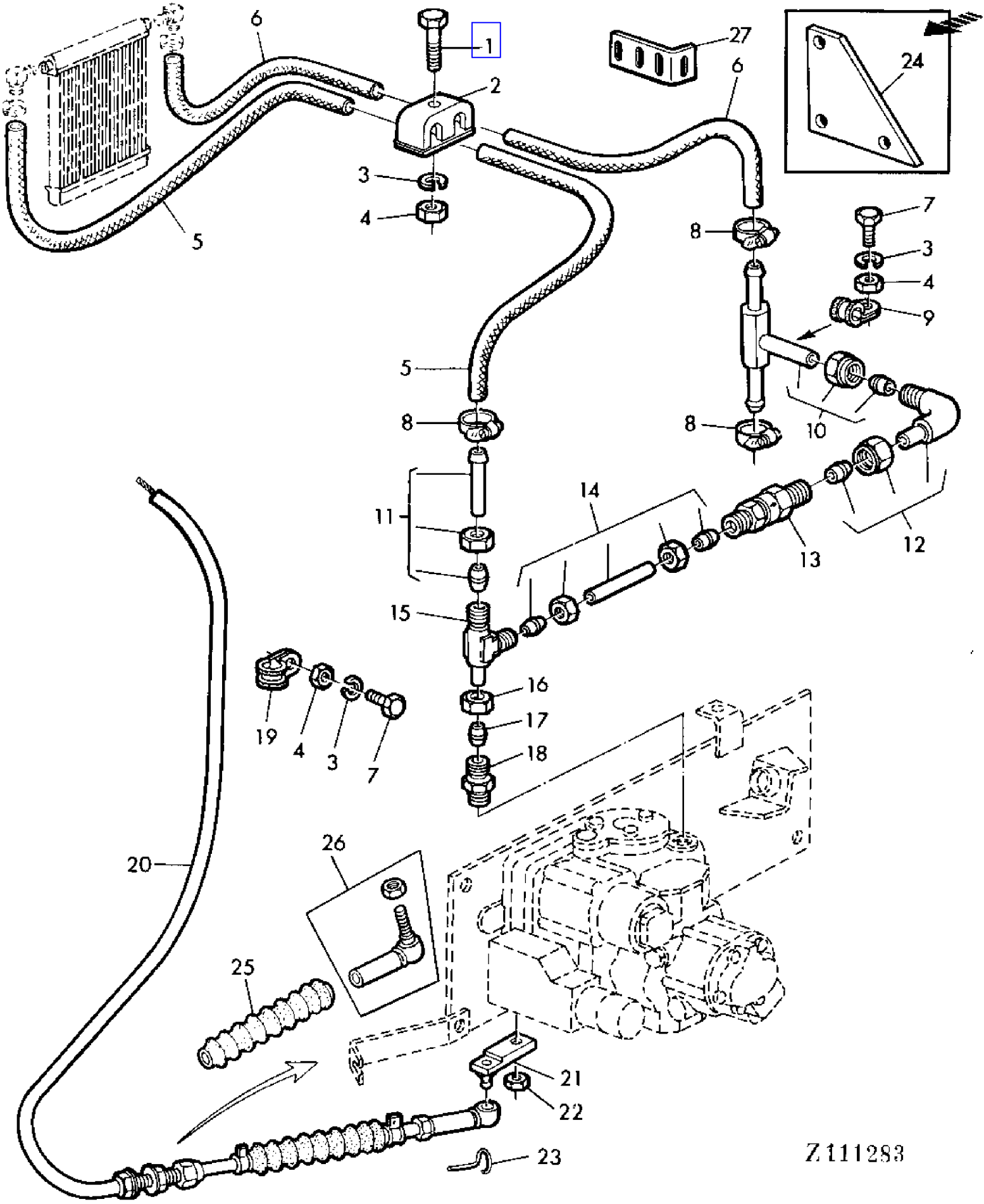

COPYRIGHT©1994 - 2008 DEERE & COMPANY Moline, Illinois All rights reserved

(1H08) OIL LINES AND GROUND SPEED CONTROL CABLE
CONDUITES ET CABLE DE COMMANDE
LEITUNGEN UND FERNBETAETIGUNG
LINEE OLIO E CAVI DI COMANDO A DISTANZA
TUBERIAS DE ACEITE Y CABLES DE MANDO A DISTANCIA
LEDNINGAR OCH FJARRKONTROLLKABEL

KEY	PART NO.	PART NAME	QTY	SERIAL NO.	975	975HY/4	REMARKS
1	19M7299	CAP SCREW	AR			X	M6 X 45
2	Z39185	CLAMP	AR			X	
3	12M7012	LOCK WASHER	AR			X	6 MM
4	14M7027	NUT	AR			X	M6
5	Z39180	HOSE	1			X	(SUB FOR Z39179)
6	Z39179	HOSE	1			X	(ORD Z39180)
7	19M7580	CAP SCREW	1			X	M6 X 28
8	Z26822	CLAMP	3			X	
9	Z35405	CLAMP	1			X	
10	AZ28528	HOSE FITTING	1			X	
11	AZ28529	HOSE FITTING	1			X	
12	AZ21976	ELBOW FITTING	1			X	
13	AZ26402	CHECK VALVE	1			X	
14	AZ28120	PIPE	1			X	
15	AZ26403	TEE FITTING	1			X	
16	Z32972	TUBE NUT	AR			X	
17	Z32992	SLEEVE FITTING	AR			X	
18	Z37461	FITTING	1			X	
19	Z22064	CLAMP	AR			X	
20	AZ28521	PUSH PULL CABLE	1			X	
21	AZ28530	HOLDER	1			X	
22	14H850	NUT	1			X	1/4"
23	56M7005	BALL JOINT RETAINER	2			X	
24	Z39182	GUARD	1			X	(ORD Z42773)
25	Z41811	BOOT	2			X	
26	AZ17982	BALL JOINT	2			X	
27	Z42773	LOOM	AR			X	(SUB FOR Z39182)

COPYRIGHT©1994 - 2008 DEERE & COMPANY Moline, Illinois All rights reserved

(1A24) OIL PAN
CARTER D'HUILE
OELWANNE
COPPA DELL'OLIO
CARTER DE ACEITE
OLJETRAG

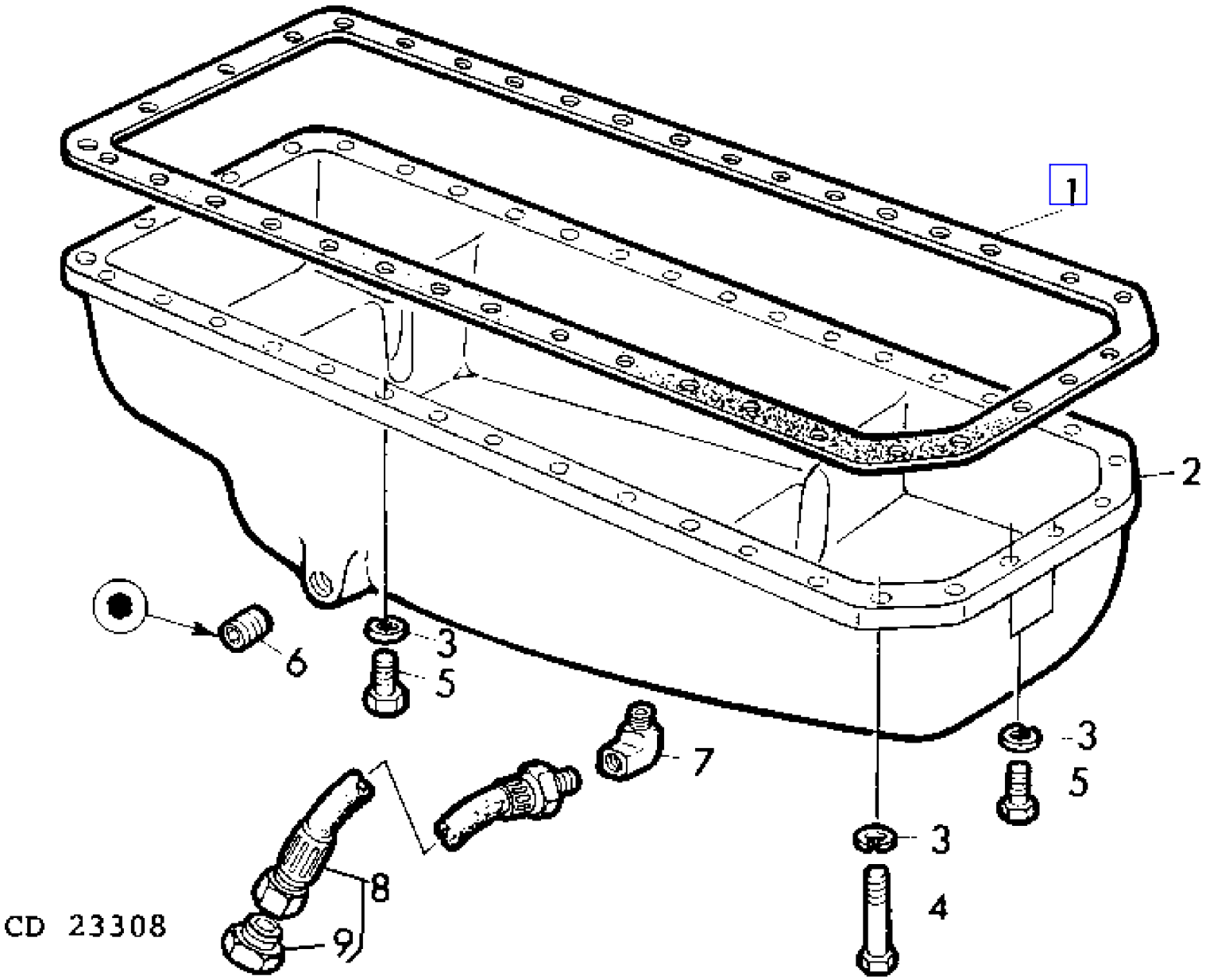

COPYRIGHT©1994 - 2008 DEERE & COMPANY Moline, Illinois All rights reserved

(1A24) OIL PAN
CARTER D'HUILE
OELWANNE
COPPA DELL'OLIO
CARTER DE ACEITE
OLJETRAG

KEY	PART NO.	PART NAME	QTY	SERIAL NO.	975	975HY/4	REMARKS
1	R56933	GASKET	1		X	X	(SUB FOR T20205)
2	R56406	OIL PAN	1		X	X	
3	12H304	LOCK WASHER	36		X	X	3/8"
4	19H1800	CAP SCREW	4		X	X	3/8" X 1-1/2"
5	19H2552	CAP SCREW	32		X	X	3/8" X 1-1/8"
6	15H624	PIPE PLUG	1		X	X	1/2"
7	15H200	ELBOW FITTING	1		X	X	1/2"
8	AZ23792	HOSE	1		X	X	ASSY, INCL KEY 9
9	R71116	PIPE PLUG	1		X	X	

COPYRIGHT©1994 - 2008 DEERE & COMPANY Moline, Illinois All rights reserved

(1A25) OIL PUMP
POMPE A HUILE
OELPUMPE
POMPA DELL'OLIO
BOMBA DE ACEITE
OLJEPUMP

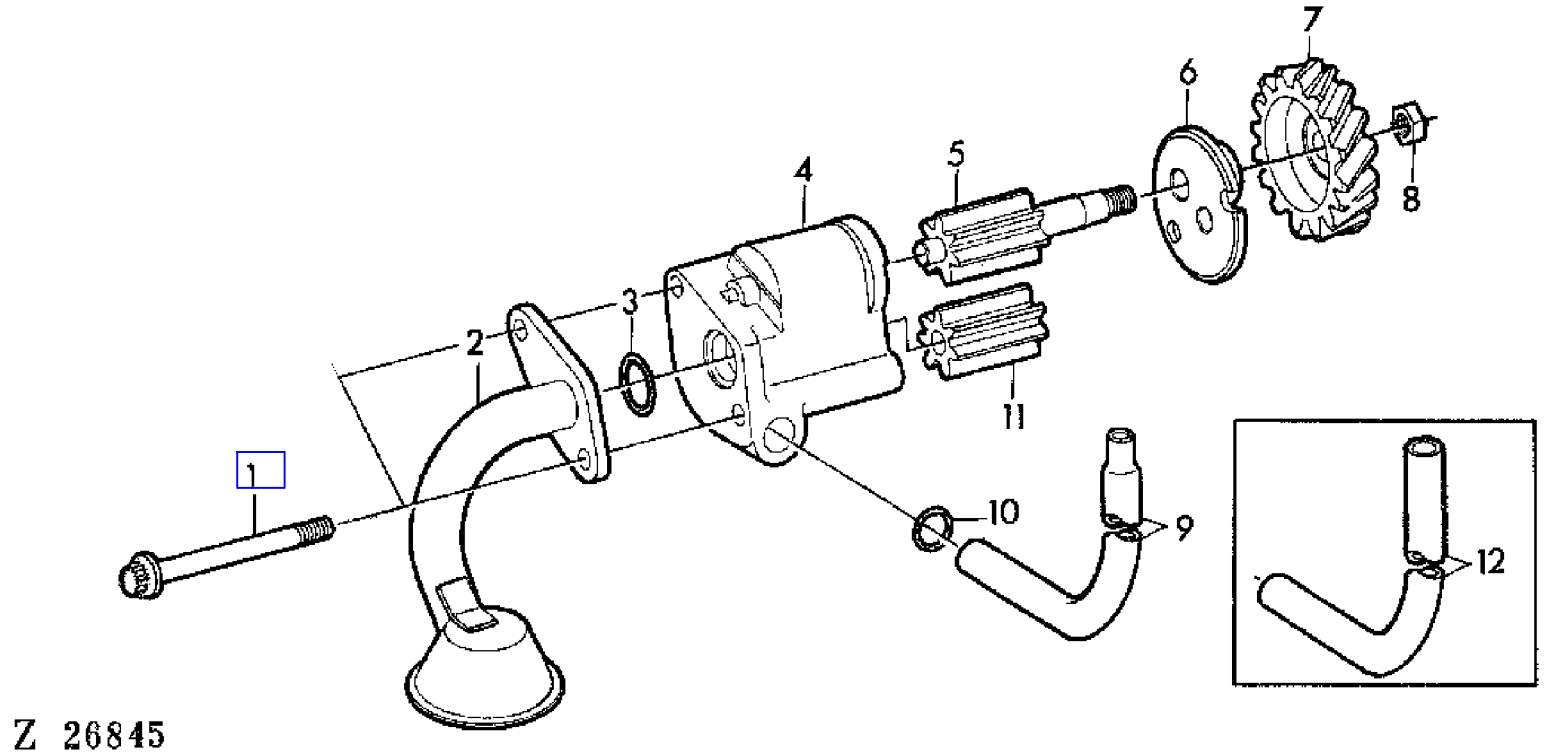

COPYRIGHT©1994 - 2008 DEERE & COMPANY Moline, Illinois All rights reserved

(1A25) OIL PUMP
POMPE A HUILE
OELPUMPE
POMPA DELL'OLIO
BOMBA DE ACEITE
OLJEPUMP

KEY	PART NO.	PART NAME	QTY	ENGINE SERIAL NO.	975	975HY/4	REMARKS
1	R59409	CAP SCREW	2		X	X	(SUB FOR 19H2228)
2	AR66402	OIL PUMP INTAKE	1		X	X	
3	R61871	O-RING	1		X	X	(SUB FOR A4730R APPL)
4	AR63037	HOUSING	1		X	X	
5	AR85788	SHAFT	1		X	X	(SUB FOR AR63038)
6	R54632	COVER	1		X	X	
7	T20298	GEAR	1		X	X	Z = 33
8	14H826	NUT	1		X	X	1/2"
9	R62664	OIL TUBE	1	245317 -	X	X	
10	R27564	O-RING	1		X	X	
11	R66177	GEAR	1		X	X	(SUB FOR R54631)
12	R59264	OIL LINE	1	- 245316	X		

COPYRIGHT©1994 - 2008 DEERE & COMPANY Moline, Illinois All rights reserved

(3B12) OPERATING CABLES ON OPERATOR'S PLATFORM
CABLES SOUS GAINE DE LA PLATE-FORME DE CONDUITE
BEDIENUNGSSEILZUEGE AN FAHRERPLATTFORM
CAVI DI COMANDO SULLA PIATTAFORMA DELL'OPERATORE
CABLES DE MANDO EN LA PLATAFORMA DE CONDUCCION
MANOVERWIREN AV FORARPLATTFORM

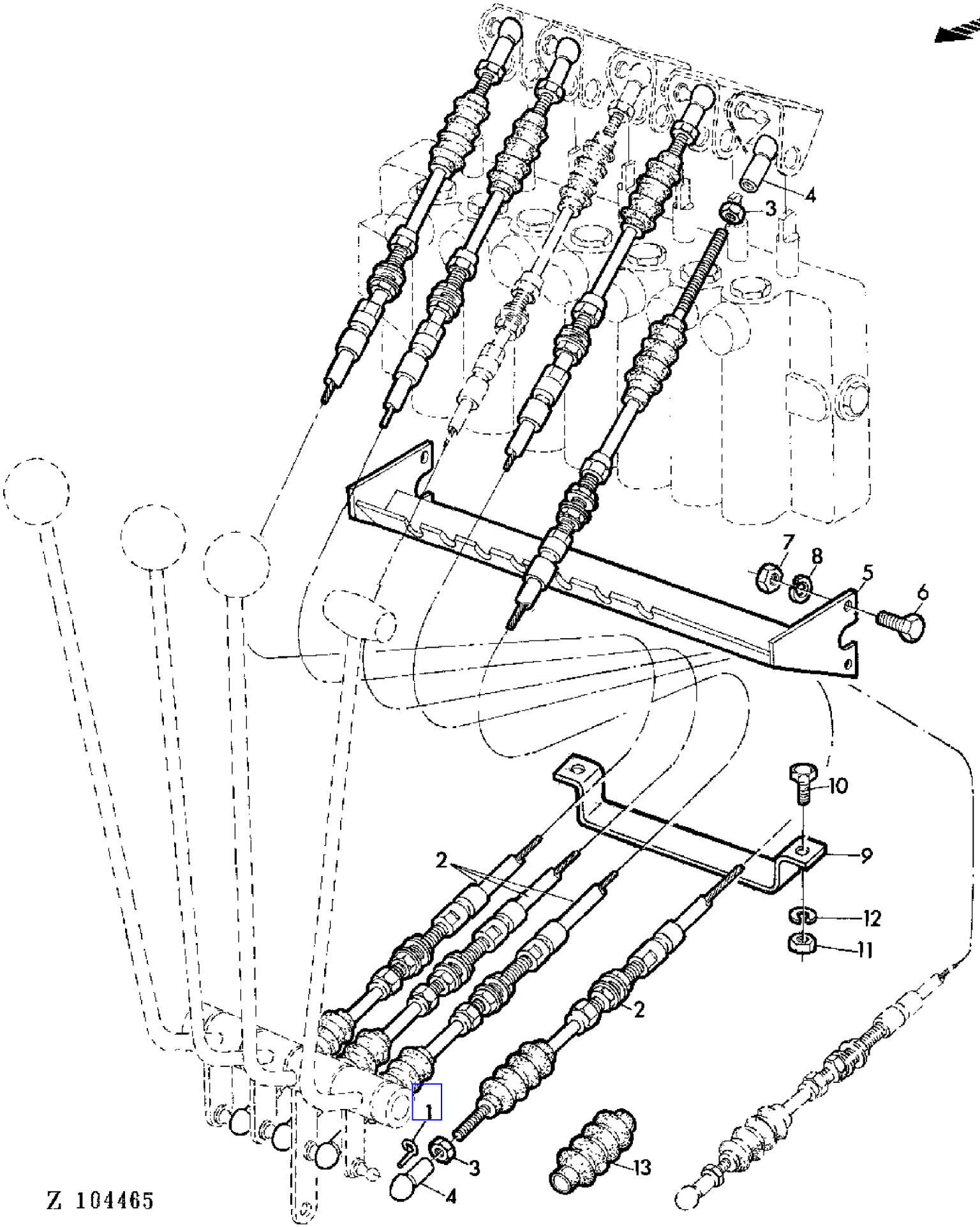

COPYRIGHT©1994 - 2008 DEERE & COMPANY Moline, Illinois All rights reserved

(3B12) OPERATING CABLES ON OPERATOR'S PLATFORM
CABLES SOUS GAINE DE LA PLATE-FORME DE CONDUITE
BEDIENUNGSSEILZUEGE AN FAHRERPLATTFORM
CAVI DI COMANDO SULLA PIATTAFORMA DELL'OPERATORE
CABLES DE MANDO EN LA PLATAFORMA DE CONDUCCION
MANOVERWIREN AV FORARPLATTFORM

KEY	PART NO.	PART NAME	QTY	SERIAL NO.	975	975HY/4	REMARKS
1	56M5258	BALL JOINT RETAINER	10		X	X	
2	AZ24935	PUSH PULL CABLE	4		X	X	LGTH = 2480 MM, INCL KEYS 1,3,4 (SUB FOR AZ23672)
3	14M7028	NUT	10		X	X	M5
4	56M5259	BALL JOINT SOCKET	10		X	X	INCL KEY 1 (SUB FOR Z34589)
5	AZ33692	SUPPORT	1		X	X	(SUB FOR AZ23669)
6	19M7139	CAP SCREW	4		X	X	M8 X 20
7	14M7029	NUT	4		X	X	M8
8	12M7008	LOCK WASHER	4		X	X	8 MM
9	Z34593	HOLDER	1		X	X	
10	19M7159	CAP SCREW	2		X	X	M6 X 15
11	14M7027	NUT	2		X	X	M6
12	12M7012	LOCK WASHER	2		X	X	6 MM
13	Z34588	BOOT	AR		X	X	

COPYRIGHT©1994 - 2008 DEERE & COMPANY Moline, Illinois All rights reserved

(3B10) OPERATING CONTROLS,RIGHT-HAND
LEVIERS DE COMMANDE,COTE DROIT
BEDIENUNGSHEBEL RECHTS
LEVE DI COMANDO,LATO DESTRO
PALANCAS DE MANDO,LADO DERECHO
MANOVERSPAKAR,HOGER

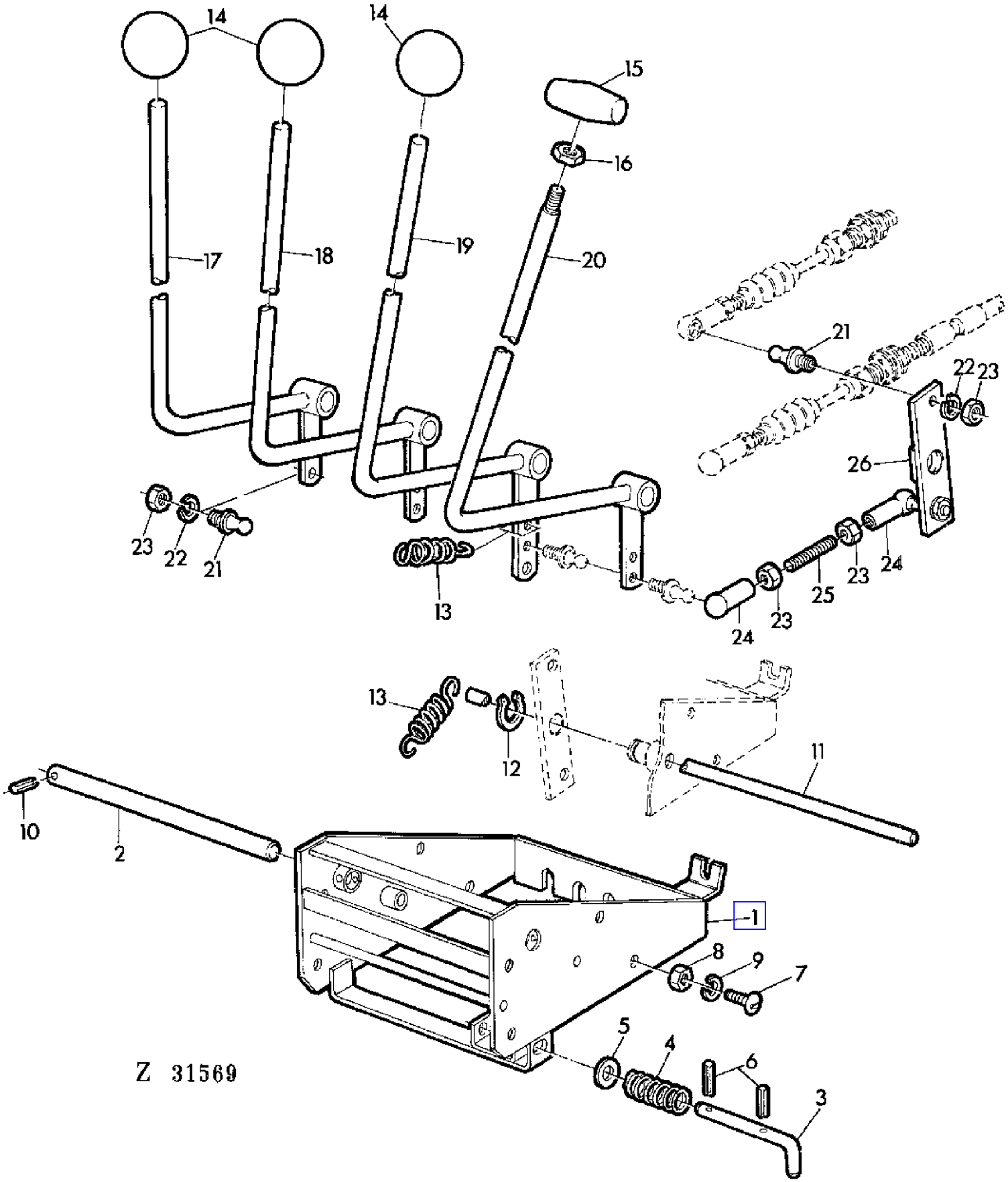

COPYRIGHT©1994 - 2008 DEERE & COMPANY Moline, Illinois All rights reserved

(3B10) OPERATING CONTROLS,RIGHT-HAND
LEVIERS DE COMMANDE,COTE DROIT
BEDIENUNGSHEBEL RECHTS
LEVE DI COMANDO,LATO DESTRO
PALANCAS DE MANDO,LADO DERECHO
MANOVERSPAKAR,HOGER

KEY	PART NO.	PART NAME	QTY	SERIAL NO.	975	975HY/4	REMARKS
1	AZ23733	HOLDER	1		X		
	AZ30985	SUPPORT	1			X	(SUB FOR AZ26430)
2	Z33686	PIN	1		X		
	Z37531	PIN	1			X	
3	Z33687	LATCH	1		X	X	
4	289SEL	SPRING	4		X	X	
5	24M7055	WASHER	1		X	X	8,4 MM
6	34M7010	SPRING PIN	2		X	X	3 X 18 MM
7	21M7081	SCREW	AR		X	X	8 X 15 MM
8	14M7029	NUT	AR		X	X	M8
9	12M7008	LOCK WASHER	AR		X	X	8 MM
10	34M7027	SPRING PIN	1		X	X	4 X 20 MM
11	Z33681	PIN	1		X	X	
12	40M1822	SNAP RING	1		X	X	16 X 1 MM
13	L12731	SPRING	8		X	X	(SUB FOR Z21613)
14	AZ24086	KNOB	3		X	X	
15	Z30244	GRIP	1		X		
16	14M7152	NUT	AR		X		M10
17	AZ23791	LEVER	1		X	X	
18	AZ23790	LEVER	1		X	X	
19	AZ23789	LEVER	1		X	X	
20	AZ23788	LEVER	1		X		
21	55M7003	BALL STUD	6		X	X	8 MM
22	12M7011	LOCK WASHER	AR		X	X	5 MM
23	14M7028	NUT	AR		X	X	M5
24	56M5259	BALL JOINT SOCKET	6		X	X	
25	Z34666	STUD	AR		X	X	
26	AZ23732	HOLDER	AR		X	X	

COPYRIGHT©1994 - 2008 DEERE & COMPANY Moline, Illinois All rights reserved

(3A11) OPERATOR'S PLATFORM
PLATE-FORME DE CONDUITE
FAHRERPLATTFORM
PIATTAFORMA DELL'OPERATORE
PLATAFORMA DE CONDUCCION
FORARPLATTFORM

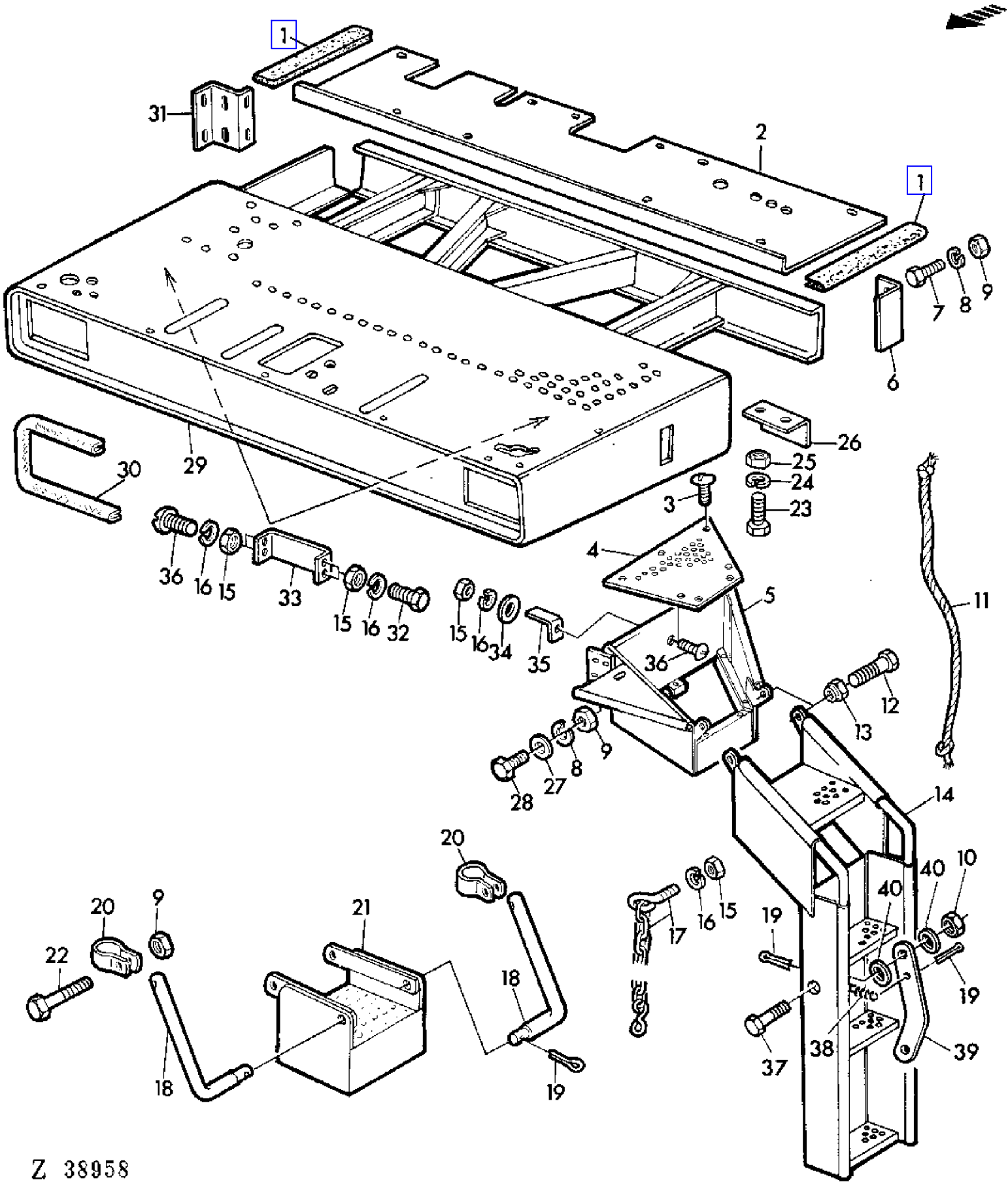

COPYRIGHT©1994 - 2008 DEERE & COMPANY Moline, Illinois All rights reserved

(3A11) OPERATOR'S PLATFORM
PLATE-FORME DE CONDUITE
FAHRERPLATTFORM
PIATTAFORMA DELL'OPERATORE
PLATAFORMA DE CONDUCCION
FORARPLATTFORM

KEY	PART NO.	PART NAME	QTY	SERIAL NO.		975	975HY/4	REMARKS
1	Z34892	GUARD	2			X	X	
2	Z34672	SHEET	1			X	X	
3	21M7081	SCREW	AR			X	X	M8 X 15
4	AZ22664	SHEET	1			X	X	
5	AZ24891	LADDER	1			X	X	
6	Z35167	ANGLE	AR			X	X	
7	19M7163	CAP SCREW	AR			X	X	M8 X 25
8	12M7008	LOCK WASHER	AR			X	X	8 MM
9	14M7029	NUT	AR			X	X	M8
10	14M7166	LOCK NUT	AR	020423	-	X	X	M8
11	Z30198	ROPE	1		- 020422	X	X	LGTH = 1700 MM
	Z41543	ROPE	1	020423	-	X	X	LGTH = 2400 MM (SUB FOR Z39019)
12	19M7646	CAP SCREW	2			X	X	M14 X 25
13	14M7169	LOCK NUT	2			X	X	M14
14	AZ22623	LADDER	1			X	X	
15	14M7027	NUT	AR			X	X	M6
16	12M7012	LOCK WASHER	AR			X	X	6 MM
17	AZ26783	LINK CHAIN	AR			X	X	
18	Z28804	PIN	2			X	X	
19	11M7020	COTTER PIN	2			X	X	4 X 25 MM
20	Z28802	CLAMP	2			X	X	
21	AZ17359	STEP	1			X	X	
22	19M7295	CAP SCREW	2			X	X	M8 X 45
23	19M7166	CAP SCREW	2			X	X	M10 X 20
24	12M7013	LOCK WASHER	2			X	X	10 MM
25	14M7140	NUT	2			X	X	M10
26	Z35166	ANGLE	AR			X	X	
27	24M7055	WASHER	2			X	X	8,5 MM
28	19M7139	CAP SCREW	2			X	X	M8 X 20
29	AZ22579	PLATFORM	1		- 026722	X	X	
	AZ28893	PLATFORM	1	026723	-	X	X	
30	Z34894	GUARD	1			X	X	
31	Z33696	REINFORCEMENT	1			X	X	
32	19M7159	CAP SCREW	AR			X	X	M6 X 16
33	Z33697	HOLDER	2			X	X	
34	24M7088	WASHER	1			X	X	6,6 MM
35	L16606	ANGLE	1			X	X	
36	21M7031	SCREW	AR			X	X	M6 X 15
37	19M7288	CAP SCREW	AR	020423	-	X	X	M8 X 30
38	L12259	SPRING	1	020423	-	X	X	
39	Z39025	LEVER	1	020423	-	X	X	
40	24M7036	WASHER	AR	020423	-	X	X	9 MM

COPYRIGHT©1994 - 2008 DEERE & COMPANY Moline, Illinois All rights reserved

(3A11) OPERATOR'S PLATFORM
PLATE-FORME DE CONDUITE
FAHRERPLATTFORM
PIATTAFORMA DELL'OPERATORE
PLATAFORMA DE CONDUCCION
FORARPLATTFORM

KEY	PART NO.	PART NAME	QTY	SERIAL NO.	975	975HY/4	REMARKS

COPYRIGHT©1994 - 2008 DEERE & COMPANY Moline, Illinois All rights reserved

(3A13) OPERATOR'S PLATFORM
PLATE-FORME DE CONDUITE
FAHRERPLATTFORM
PIATTAFORMA DELL'OPERATORE
PLATAFORMA DE CONDUCCION
FORARPLATTFORM

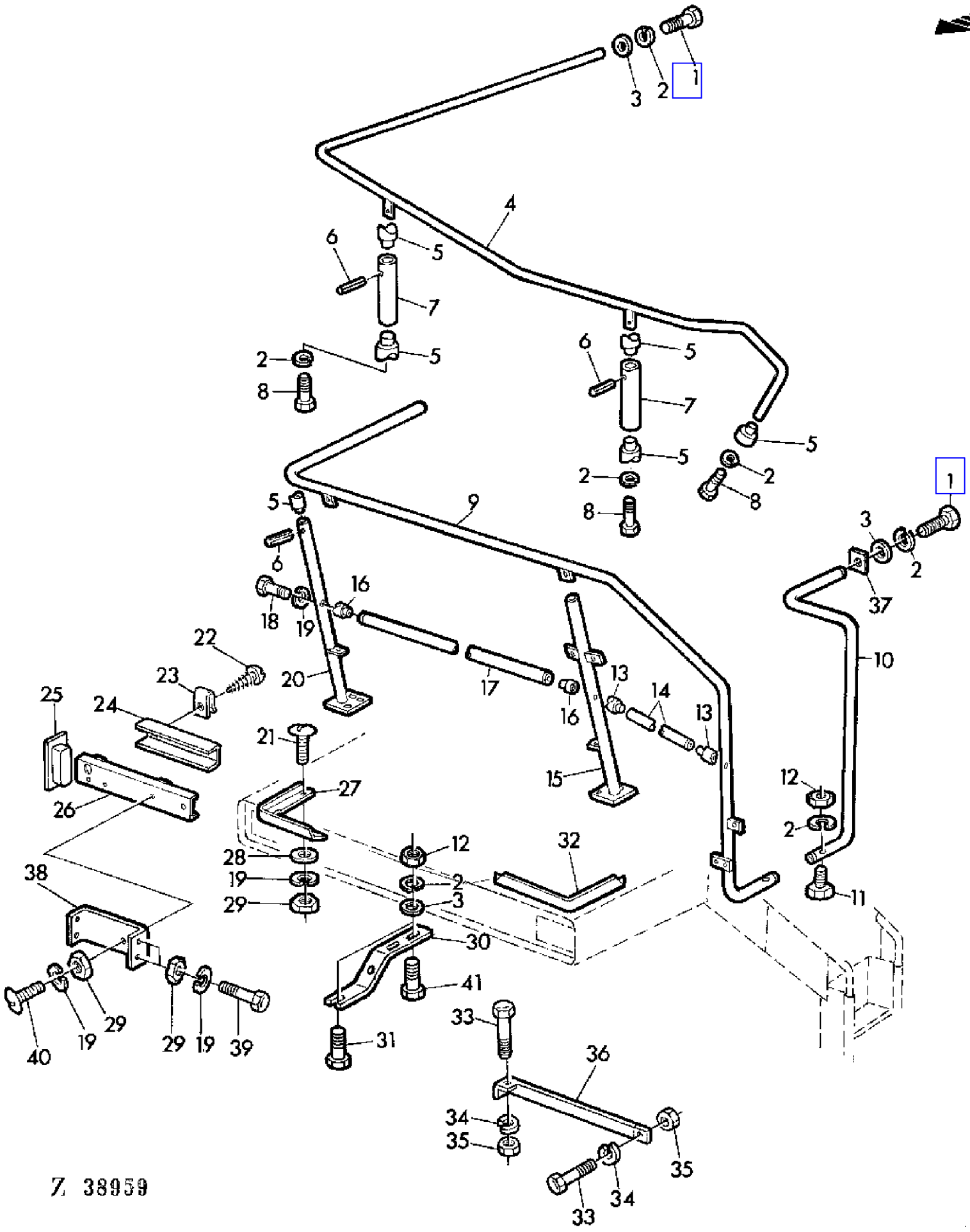

COPYRIGHT©1994 - 2008 DEERE & COMPANY Moline, Illinois All rights reserved

(3A13) OPERATOR'S PLATFORM
PLATE-FORME DE CONDUITE
FAHRERPLATTFORM
PIATTAFORMA DELL'OPERATORE
PLATAFORMA DE CONDUCCION
FORARPLATTFORM

KEY	PART NO.	PART NAME	QTY	SERIAL NO.	975	975HY/4	REMARKS
1	19M7163	CAP SCREW	AR		X	X	M8 X 25
2	12M7008	LOCK WASHER	AR		X	X	8 MM
3	24M7024	WASHER	AR		X	X	9,5 MM
4	AZ21779	HANDRAIL	1		X	X	
5	Z29723	SLEEVE	AR		X	X	
6	34M7033	SPRING PIN	AR		X	X	5 X 30 MM
7	AZ21762	ROD	2		X	X	
8	19M7185	CAP SCREW	AR		X	X	M8 X 60
9	AZ23731	HANDRAIL	1		X	X	
10	AZ10941	HANDRAIL	1		X	X	
11	19M7295	CAP SCREW	AR		X	X	M8 X 45
12	14M7029	NUT	AR		X	X	M8
13	Z33194	SPACER	2		X	X	
14	Z33192	PIPE	1		X	X	
15	AZ22694	SUPPORT	1		X	X	
16	Z32322	SPACER	2		X	X	
17	AZ22393	ROD	1		X	X	
18	19M7319	SCREW	AR		X	X	M6 X 60
19	12M7012	LOCK WASHER	AR		X	X	6 MM
20	AZ22693	SUPPORT	1		X	X	
21	21M7087	SCREW	AR		X	X	M6 X 12
22	37M7009	SCREW	2		X	X	5,5 X 19 MM
23	Z20443	NUT	2		X	X	
24	Z33702	CHANNEL	1		X	X	
25	Z34505	PLUG	1		X	X	
26	AZ22692	CHANNEL	1		X	X	
27	Z33706	MOLDING	1		X	X	
28	24M7100	WASHER	AR		X	X	7 MM
29	14M7027	NUT	AR		X	X	M6
30	Z33698	BRACE	2		X	X	
31	19M7162	CAP SCREW	2		X	X	M8 X 16
32	Z33705	SHIELD	1		X	X	
33	19M7166	CAP SCREW	4		X	X	M10 X 20
34	12M7013	LOCK WASHER	4		X	X	10 MM
35	14M7140	NUT	4		X	X	M10
36	Z32787	BRACE	2		X	X	
37	Z21911	PLATE	1		X	X	
38	Z33697	HOLDER	2		X	X	
39	19M7159	CAP SCREW	AR		X	X	M6 X 16
40	21M7031	SCREW	AR		X	X	M6 X 15
41	19M7288	CAP SCREW	AR		X	X	M8 X 30

COPYRIGHT©1994 - 2008 DEERE & COMPANY Moline, Illinois All rights reserved

(3A21) OPERATOR'S SEAT
SIEGE DU CONDUCTEUR
FAHRERSITZ
SEDILE DELL'OPERATORE
ASIENTO
FORARSATE

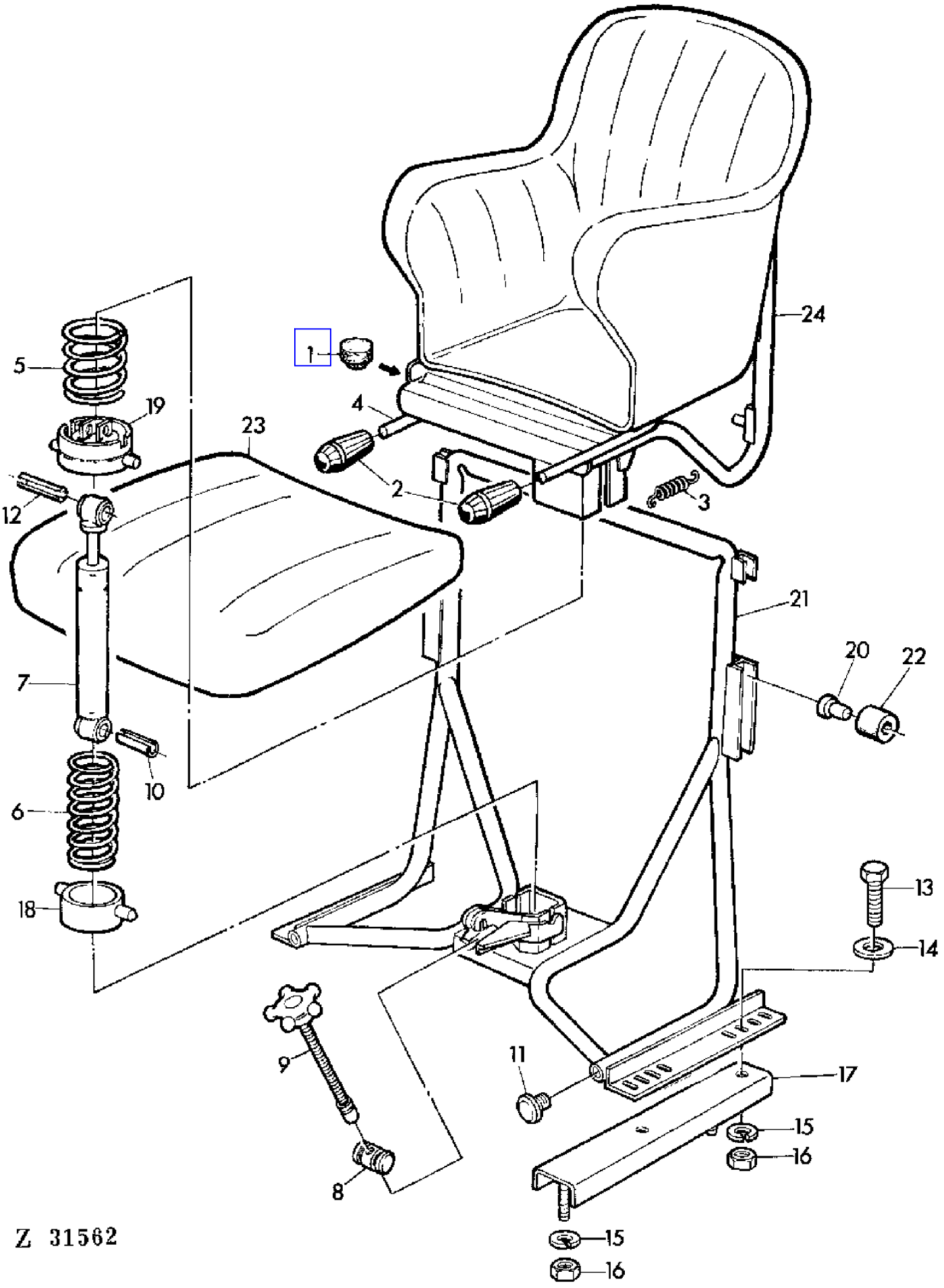

COPYRIGHT©1994 - 2008 DEERE & COMPANY Moline, Illinois All rights reserved

(3A21) OPERATOR'S SEAT
SIEGE DU CONDUCTEUR
FAHRERSITZ
SEDILE DELL'OPERATORE
ASIENTO
FORARSATE

KEY	PART NO.	PART NAME	QTY	SERIAL NO.	975	975HY/4	REMARKS
1	Z32104	STOP	2		X	X	
2	Z32110	GRIP	2		X	X	
3	Z35711	EXTENSION SPRING	1		X	X	
4	AZ20938	LEVER	1		X	X	
5	Z31241	COMPRESSION SPRING	1		X	X	
6	Z31244	COMPRESSION SPRING	1		X	X	
7	AZ20937	ABSORBER	1		X	X	
8	Z32105	TOGGLE	1		X	X	
9	AZ20935	SCREW	1		X	X	
10	34M7046	SPRING PIN	1		X	X	8 X 36 MM
11	Z35712	PLUG	4		X	X	
12	34M7049	SPRING PIN	1		X	X	8 X 50 MM
13	19M7166	CAP SCREW	4		X	X	M10 X 20
14	24M7028	WASHER	4		X	X	10,5 MM
15	12M7013	LOCK WASHER	8		X	X	10 MM
16	14M7140	NUT	8		X	X	M10
17	AZ24676	RAIL	2		X	X	
18	AZ20936	CAGE	1		X	X	
19	AZ20934	CAGE	1		X	X	
20	Z33801	PIN	4		X	X	
21	AZ24675	SUPPORT	1		X	X	
22	Z33800	ROLLER	4		X	X	
23	AZ20940	CUSHION	1		X	X	
24	AZ20941	SEAT	1		X	X	

COPYRIGHT©1994 - 2008 DEERE & COMPANY Moline, Illinois All rights reserved

(4E14) PADDLE CHAIN-TAILINGS ELEVATOR
CHAINE D'ALIMENTATION-ELEVATEUR D'OTONS
FOERDERKETTE-UEBERKEHRELEVATOR
CATENA A PALETTE-ELEVATORE DEI RICUPERI
CADENA DE ARRASTRE-ELEVADOR DE RETRILLA
ELEVATORKEDJA-RETURELEVATOR

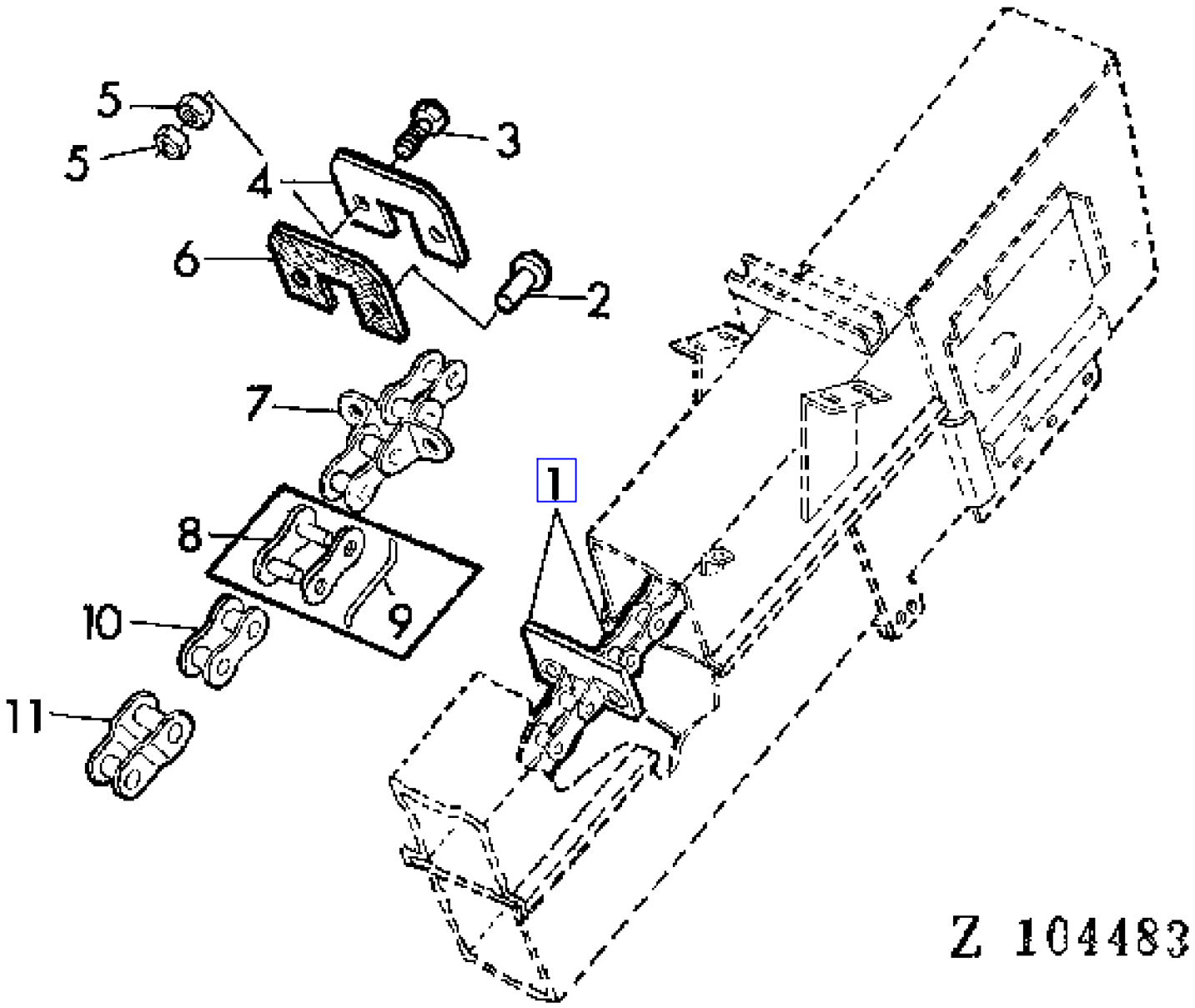

COPYRIGHT©1994 - 2008 DEERE & COMPANY Moline, Illinois All rights reserved

(4E14) PADDLE CHAIN-TAILINGS ELEVATOR
CHAINE D'ALIMENTATION-ELEVATEUR D'OTONS
FOERDERKETTE-UEBERKEHRELEVATOR
CATENA A PALETTE-ELEVATORE DEI RICUPERI
CADENA DE ARRASTRE-ELEVADOR DE RETRILLA
ELEVATORKEDJA-RETURELEVATOR

KEY	PART NO.	PART NAME	QTY	SERIAL NO.			975	975HY/4	REMARKS
1	AZ24219	LINK CHAIN	1		-	016667	X		ASSY (ORD AZ27730, Z11211, Z11212)
	AZ24219	LINK CHAIN	1	016668	-	017017	X		(ORD AZ27730 W/ (2) Z11211)
	AZ27730	GATHERER CHAIN	1	017018	-		X	X	L = 145, ASSY, INCL KEYS 8,11
2	Z20779	RIVET	36				X	X	
3	19M7077	CAP SCREW	AR				X	X	M6 X 20
4	Z20728	PADDLE	AR		-	017017	X		
	Z38508	PADDLE	AR	017018	-		X	X	
5	14M7027	NUT	AR				X	X	M6
6	Z20781	PADDLE	18		-	017017	X		
	Z38509	PADDLE	18	017018	-		X	X	
7	AZ24535	LINK CHAIN	AR		-	017017	X		
	AZ27729	LINK CHAIN	AR	017018	-		X	X	
8	AZ24534	LINK	AR		-	017017	X		
	AZ27728	GATHERER CHAIN	AR	017018	-		X	X	
9	Z42619	RETAINER	AR				X	X	
10	AZ24533	LINK	AR		-	017017	X		
	AZ27727	LINK CHAIN	AR	017018	-		X	X	
11	AZ24233	CHAIN LINK	AR		-	017017	X		
	AZ28032	CHAIN LINK	AR	017018	-		X	X	

COPYRIGHT©1994 - 2008 DEERE & COMPANY Moline, Illinois All rights reserved

(4F10) PADDLE ROLL-GRAIN TANK
ROULEAU A PALETTES-TREMIE
PADDELWALZE-KORNTANK
CILINDRO A LISTELLI NEL SERBATOIO DI GRANO
CILINDRO DE PALETAS EN EL TANQUE DE GRANO
SKOVELAXEL-SPANNMALSTANK

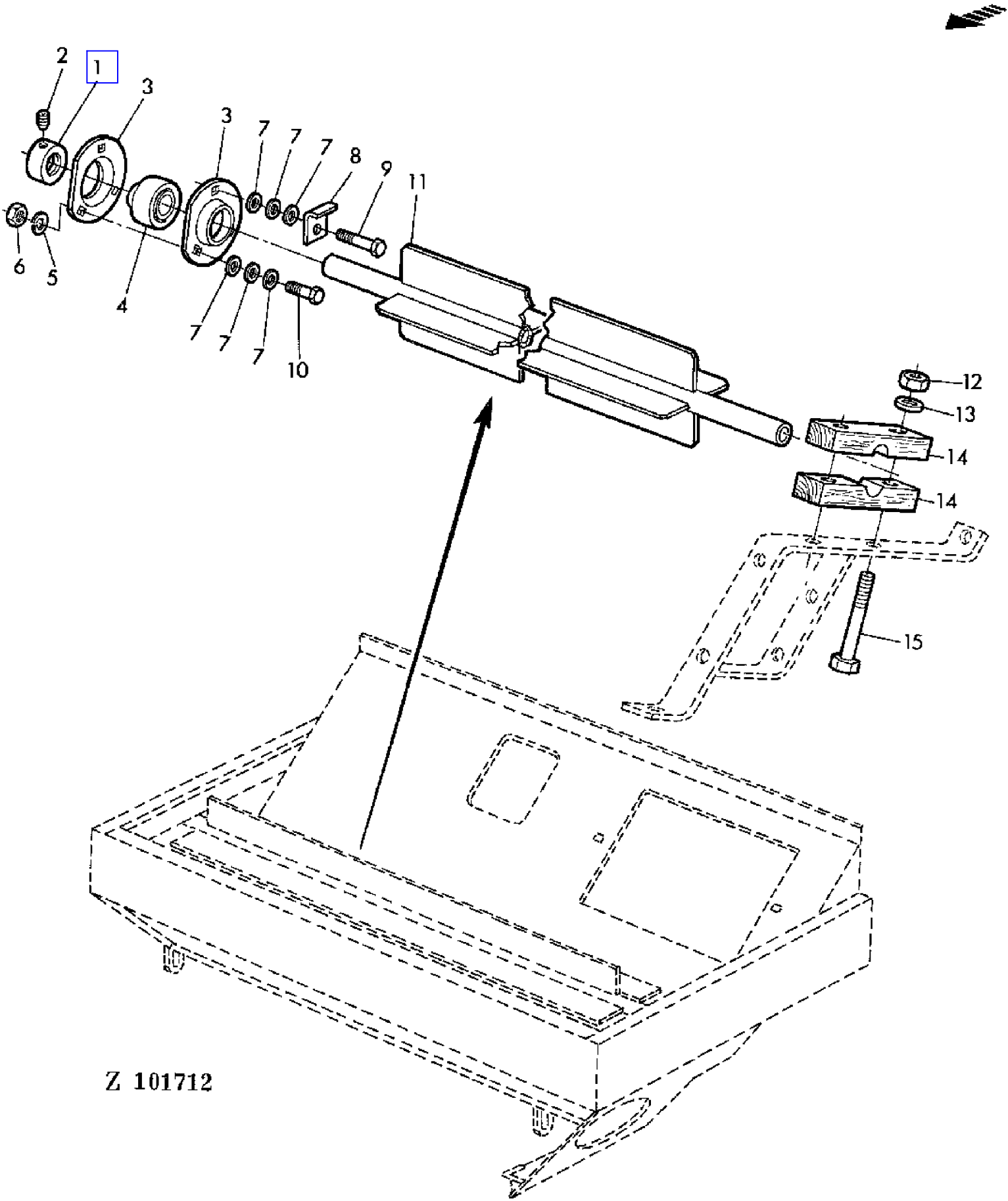

COPYRIGHT©1994 - 2008 DEERE & COMPANY Moline, Illinois All rights reserved

(4F10) PADDLE ROLL-GRAIN TANK
ROULEAU A PALETTES-TREMIE
PADDELWALZE-KORNTANK
CILINDRO A LISTELLI NEL SERBATOIO DI GRANO
CILINDRO DE PALETAS EN EL TANQUE DE GRANO
SKOVELAXEL-SPANNMALSTANK

KEY	PART NO.	PART NAME	QTY	SERIAL NO.	975	975HY	REMARKS
1	AZ10045	ECCENTRIC LOCKING COLLAR	1		X	X	INCL KEY 2
2	AZ19844	SET SCREW	1		X	X	KIT
3	Z38395	PRESSED FLANGED HOUSING	2		X	X	
4	JD39103	BALL BEARING	1		X	X	
5	12M7013	LOCK WASHER	AR		X	X	10 MM
6	14M7140	NUT	AR		X	X	M10
7	24M7040	WASHER	AR		X	X	11 MM
8	Z42258	RETAINER	1		X	X	
9	19M7168	CAP SCREW	AR		X	X	M10 X 30
10	19M7167	CAP SCREW	AR		X	X	M10 X 25
11	AZ32305	ROLL	1		X	X	
12	14M7166	LOCK NUT	AR		X	X	M8
13	24M7024	WASHER	AR		X	X	9,5 MM
14	AZ32559	KIT	1		X	X	KIT
15	19M7997	CAP SCREW	2		X	X	M8 X 110

COPYRIGHT©1994 - 2008 DEERE & COMPANY Moline, Illinois All rights reserved

(1F04) PARKING BRAKE INDICATOR LIGHT
TEMOIN POUR FREIN A MAIN
WARNEINRICHTUNG HANDBREMSE
SEGNALAZIONE FRENO A MANO
LUZ TESTIGO DEL FRENO DE MANO
HANDBROMSENS VARNINGSSYSTEM

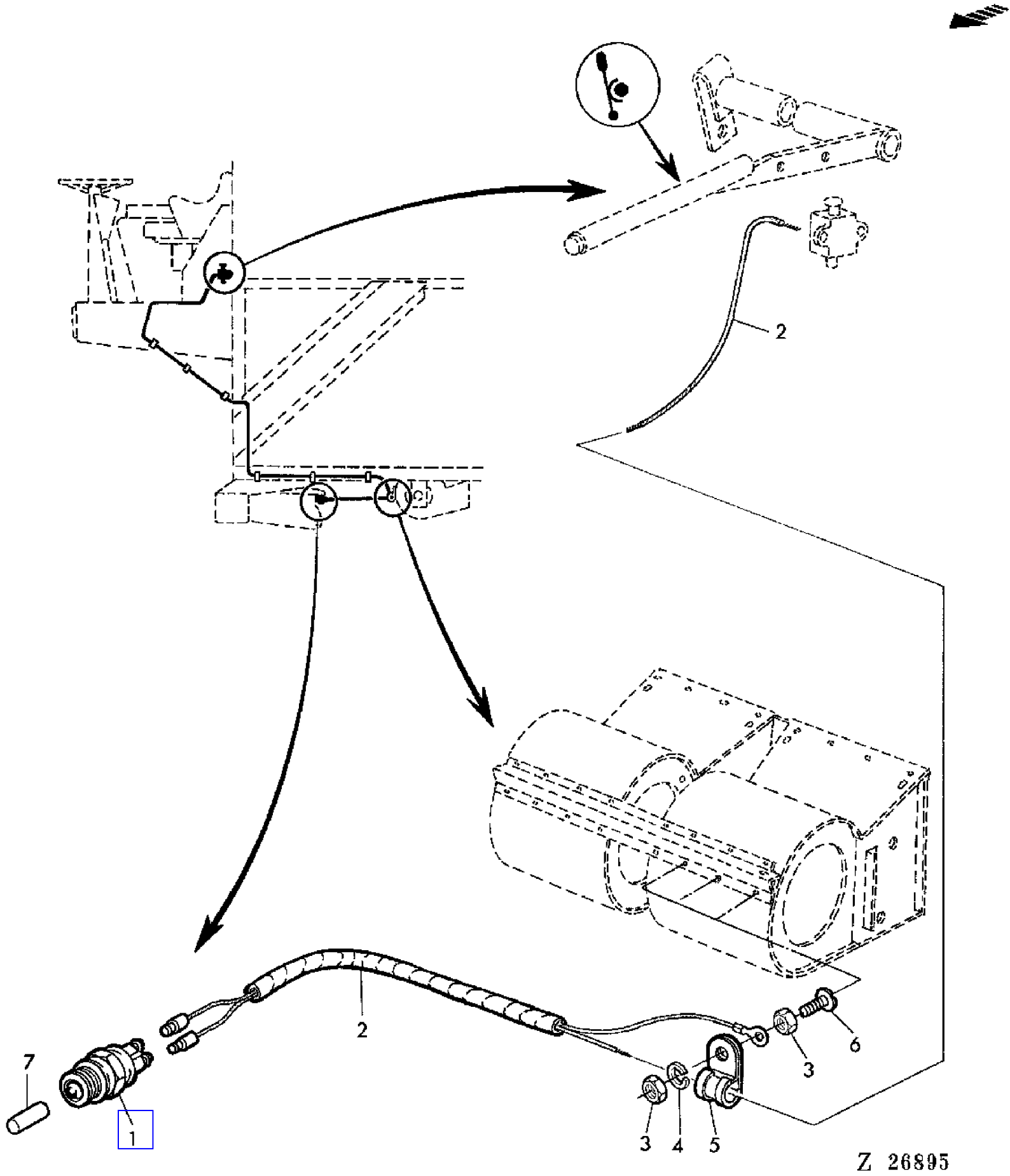

COPYRIGHT©1994 - 2008 DEERE & COMPANY Moline, Illinois All rights reserved

(1F04) PARKING BRAKE INDICATOR LIGHT
TEMOIN POUR FREIN A MAIN
WARNEINRICHTUNG HANDBREMSE
SEGNALAZIONE FRENO A MANO
LUZ TESTIGO DEL FRENO DE MANO
HANDBROMSENS VARNINGSSYSTEM

KEY	PART NO.	PART NAME	QTY	SERIAL NO.	975	975HY/4	REMARKS
1	AT18988	SWITCH	1		X	X	
2	AZ26998	WIRING HARNESS	1		X	X	
3	14M7027	NUT	AR		X	X	M6
4	12M7012	LOCK WASHER	AR		X	X	6 MM
5	Z29667	CLAMP	3		X	X	
6	21M7159	SCREW	3		X	X	M6 X 25
7	H75813	PIN	1		X		

COPYRIGHT©1994 - 2008 DEERE & COMPANY Moline, Illinois All rights reserved

(1F06) PARTS FOR ELECTRICAL EQUIPMENT
ELEMENTS DE L'EQUIPEMENT ELECTRIQUE
TEILE FUER ELEKTRISCHE INSTALLATION
PARTI SINGOLE DELL'IMPIANTO ELETTRICO
DEL SISTEMA ELECTRICO COMPONENTES
DELAR FOR EL-SYSTEM

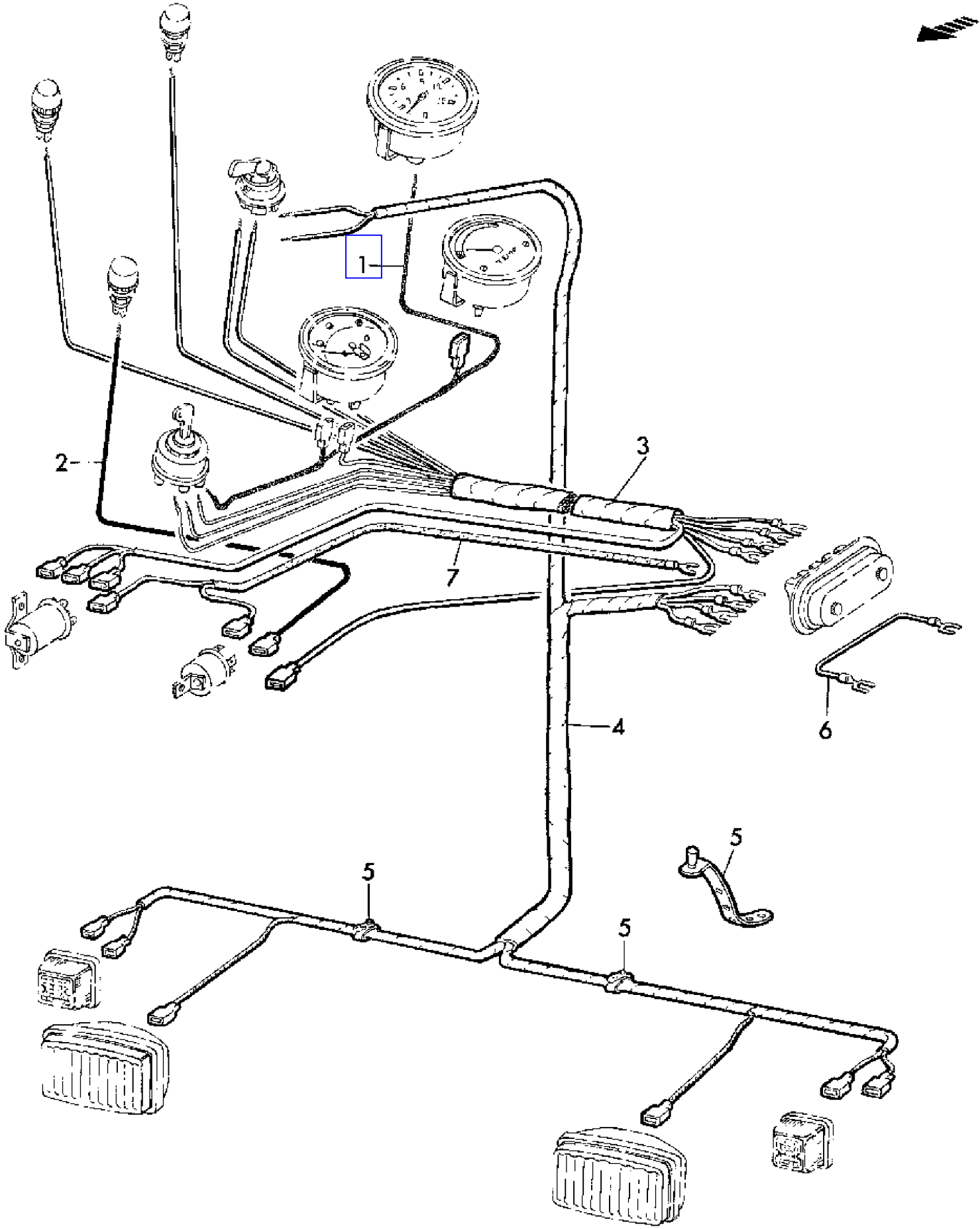

Z 26896

COPYRIGHT©1994 - 2008 DEERE & COMPANY Moline, Illinois All rights reserved

(1F06) PARTS FOR ELECTRICAL EQUIPMENT
ELEMENTS DE L'EQUIPEMENT ELECTRIQUE
TEILE FUER ELEKTRISCHE INSTALLATION
PARTI SINGOLE DELL'IMPIANTO ELETTRICO
DEL SISTEMA ELECTRICO COMPONENTES
DELAR FOR EL-SYSTEM

KEY	PART NO.	PART NAME	QTY	SERIAL NO.	975	975HY/4	REMARKS
1	AZ23650	WIRING LEAD	1		X	X	
2	Z30226	WIRING LEAD	1		X	X	
3	AZ23586	WIRING HARNESS	1		X	X	
4	AZ26183	WIRING HARNESS	1		X	X	(SUB FOR AZ23584)
5	Z31020	CLAMP	AR		X	X	
6	AZ24216	WIRING LEAD	1		X	X	
7	AZ27005	WIRING HARNESS	1		X	X	

COPYRIGHT©1994 - 2008 DEERE & COMPANY Moline, Illinois All rights reserved

(1F08) PARTS FOR ELECTRICAL EQUIPMENT
ELEMENTS DE L'EQUIPEMENT ELECTRIQUE
TEILE FUER ELEKTRISCHE ANLAGE
PARTI SINGOLE DELL'IMPIANTO ELETTRICO
COMPONENTES DEL SISTEMA ELECTRICO
DELAR FOR EL-SYSTEM

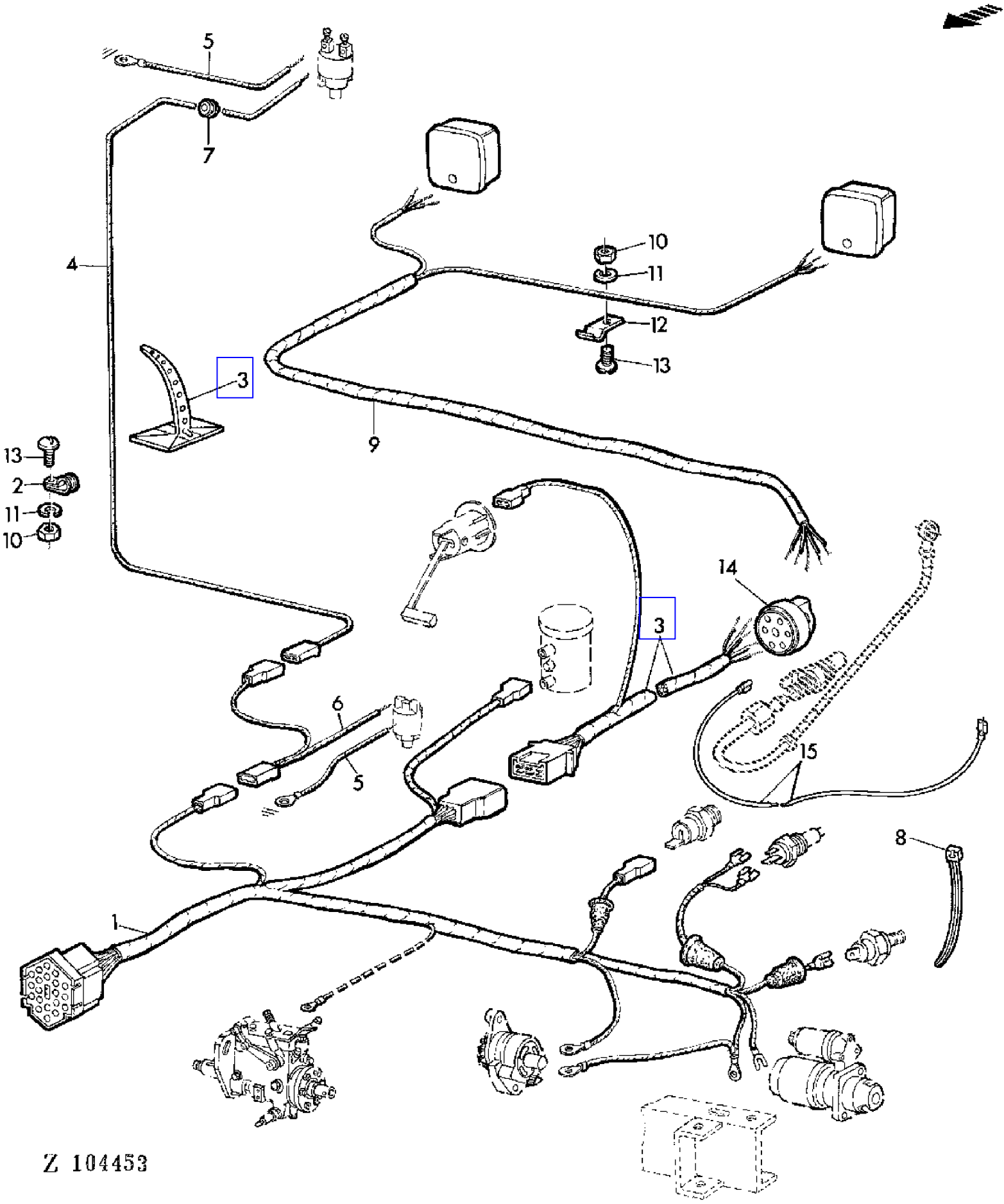

COPYRIGHT©1994 - 2008 DEERE & COMPANY Moline, Illinois All rights reserved

(1F08) PARTS FOR ELECTRICAL EQUIPMENT
ELEMENTS DE L'EQUIPEMENT ELECTRIQUE
TEILE FUER ELEKTRISCHE ANLAGE
PARTI SINGOLE DELL'IMPIANTO ELETTRICO
COMPONENTES DEL SISTEMA ELECTRICO
DELAR FOR EL-SYSTEM

KEY	PART NO.	PART NAME	QTY	SERIAL NO.		975	975HY/4	REMARKS
1	AZ23590	WIRING HARNESS	1		- 015897	X		
	AZ25906	WIRING HARNESS	1	015898	- 017017	X		
	AZ27001	WIRING HARNESS	1	017018	-	X		
	AZ28728	WIRING HARNESS	1				X	(SUB FOR AZ27002)
2	Z34587	CLAMP	AR			X	X	(SUB FOR Z22067)
3	AZ26184	WIRING HARNESS	1			X	X	(SUB FOR AZ23570)
4	AZ23563	CABLE	1			X		
	AZ23563	CABLE	1				X	
5	AZ23576	CABLE	2			X	X	
6	AZ23568	WIRING HARNESS	1			X	X	
7	Z21238	GROMMET	AR			X	X	
8	Z34568	CLAMP	AR				X	
9	AZ23589	WIRING HARNESS	1			X	X	
10	14M7027	NUT	AR			X	X	M6
11	12M7012	LOCK WASHER	AR			X	X	6 MM
12	Z22588	CLAMP	AR			X	X	
13	21M7031	SCREW	AR			X	X	M6 X 15
14	AZ13378	SOCKET OUTLET	1			X	X	
15	AZ26693	POWER CORD	1	015898	-	X		
	AZ26693	POWER CORD	1				X	

COPYRIGHT©1994 - 2008 DEERE & COMPANY Moline, Illinois All rights reserved

(3F21) PARTS FOR HYDROSTATIC REEL DRIVE
PIECES DE MONTAGE,ENTRAINEMENT HYDROSTATIQUE DU RABATTEUR
ANBAUTEILE FUER HYDROST.HASPELANTRIEB
PARTI DI MONTAGGIO PER COMANDO IDROSTATICO DELL'ASPO
PIEZAS DE MONTAJE PARA LA TRANSM.HIDROSTATICA DEL MOLINETE
MONTERINGSDETALJER FOR HYDROSTATISK HASPELDRIVNING

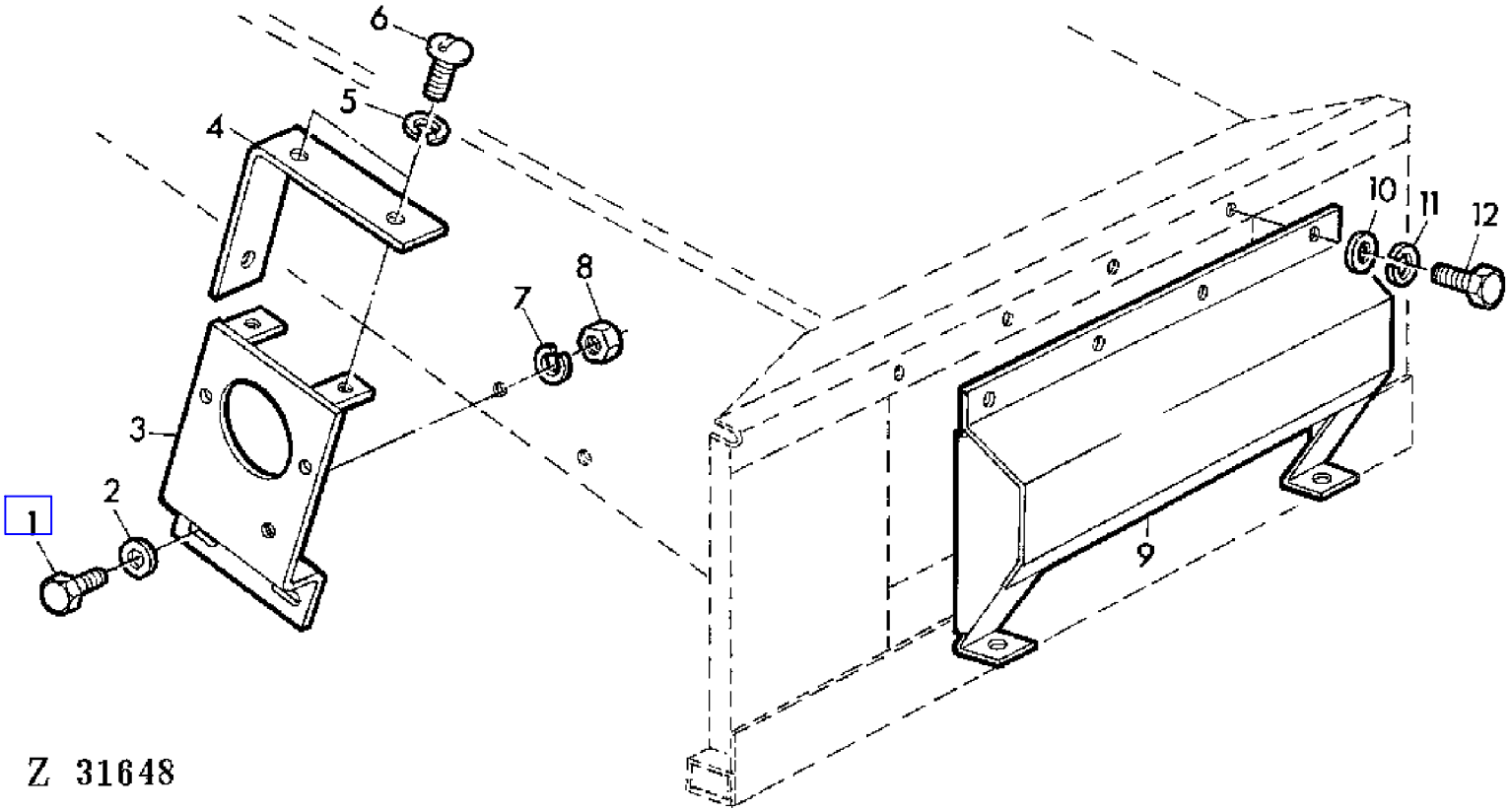

COPYRIGHT©1994 - 2008 DEERE & COMPANY Moline, Illinois All rights reserved

(3F21) PARTS FOR HYDROSTATIC REEL DRIVE
PIECES DE MONTAGE,ENTRAINEMENT HYDROSTATIQUE DU RABATTEUR
ANBAUTEILE FUER HYDROST.HASPELANTRIEB
PARTI DI MONTAGGIO PER COMANDO IDROSTATICO DELL'ASPO
PIEZAS DE MONTAJE PARA LA TRANSM.HIDROSTATICA DEL MOLINETE
MONTERINGSDETALJER FOR HYDROSTATISK HASPELDRIVNING

KEY	PART NO.	PART NAME	QTY	SERIAL NO.	975	975HY	REMARKS
1	19M7168	CAP SCREW	2		X	X	M10 X 30
2	24M7040	WASHER	2		X	X	11 MM
3	AZ25028	BRACKET	1		X	X	
4	Z36047	HOLDER	1		X	X	
5	12M7012	LOCK WASHER	3		X	X	6MM
6	21M7083	SCREW	3		X	X	M6 X 10
7	12M7013	LOCK WASHER	2		X	X	10 MM
8	14M7140	NUT	2		X	X	M10
9	AZ25098	DUST SHIELD	1		X	X	AR (ORD AZ33609, Z30143, Z30144 Z30525 (2)
10	24M7036	WASHER	4		X	X	9 MM
11	12M7008	LOCK WASHER	4		X	X	8 MM
12	19M7284	CAP SCREW	4		X	X	M8 X 18

COPYRIGHT©1994 - 2008 DEERE & COMPANY Moline, Illinois All rights reserved

(1A23) PISTON/CONNECTING ROD
PISTON/BIELLE
KOLBEN/PLEUELSTANGE
PISTONE/BIELLA
PISTON/BIELA
KOLV/KOLVSTAKE

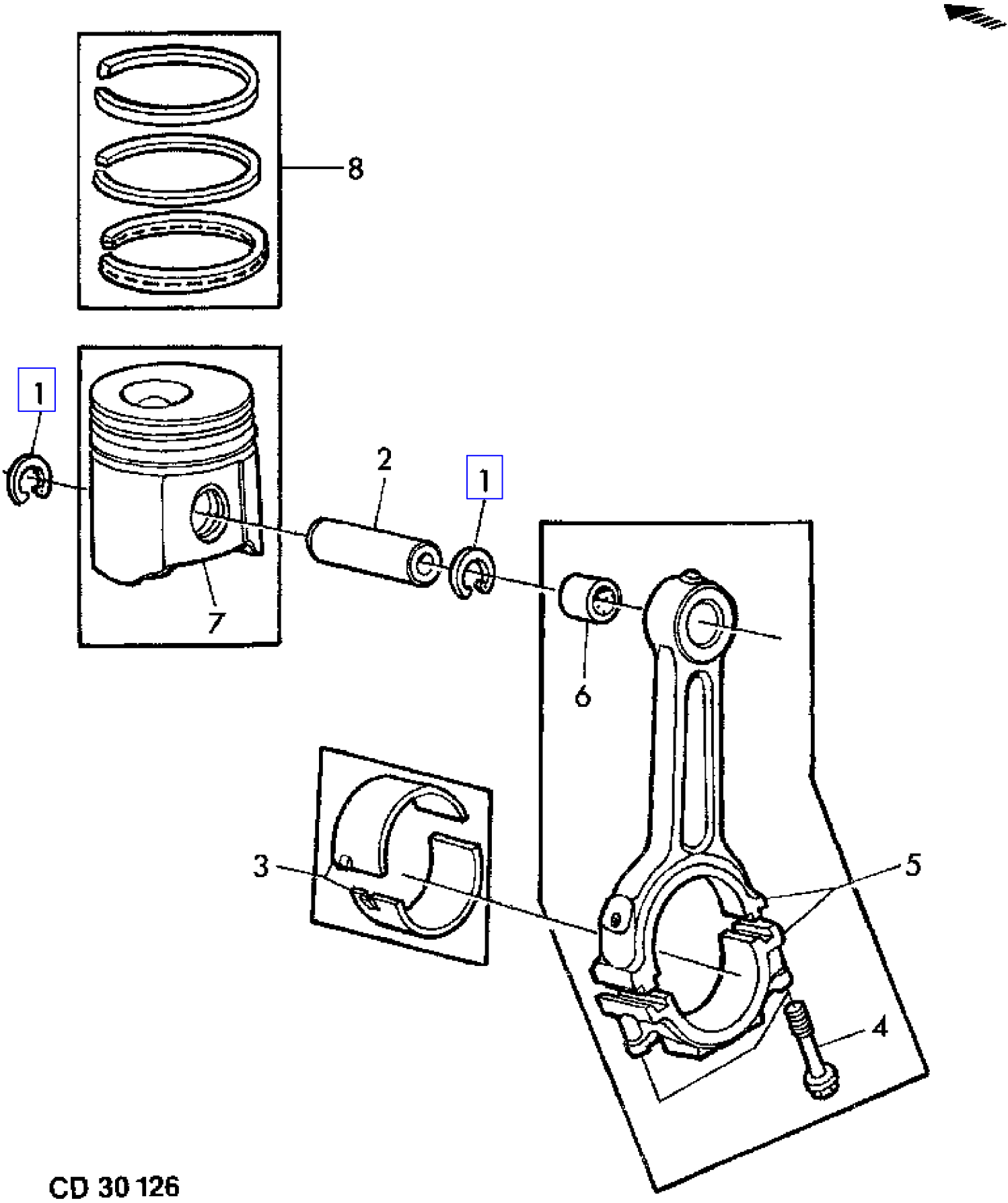

COPYRIGHT©1994 - 2008 DEERE & COMPANY Moline, Illinois All rights reserved

(1A23) PISTON/CONNECTING ROD
PISTON/BIELLE
KOLBEN/PLEUELSTANGE
PISTONE/BIELLA
PISTON/BIELA
KOLV/KOLVSTAKE

KEY	PART NO.	PART NAME	QTY	ENGINE SERIAL NO.	975	975HY/4	REMARKS
1	R54114	SNAP RING	12	- 403755	X	X	PACKG (2)
2	R56188	PISTON PIN	6	- 403755	X	X	
3	RE27348	KIT	6	- 403755	X	X	ID = STANDARD (KIT (2) R83379) (SUB FOR AR71080 KIT (2) R58980)
	RE27349	KIT	AR	- 403755	X	X	ID = -0.254 MM (0.010") (KIT (2) R87748) (SUB FOR AR76128 KIT (2) R62072, AR76129) (KIT (2) R62073)
	RE27358	KIT	AR	- 403755	X	X	ID = -0.508 MM (0.020") (KIT (2) R87754) (SUB FOR AR76130 KIT (2) R62074)
	RE27364	BEARING KIT	AR	- 403755	X	X	ID = -0.762 MM (0.030") (KIT (2) R87757) (SUB FOR AR76131 KIT (2) R62075)
4	R74194	SCREW	2	- 403755	X	X	(FOR AR71068) (SUB FOR T20009)
	R80033	SCREW	2	- 403755	X	X	(FOR RE16494)
5	RE16494	CONNECTING ROD	6	- 403755	X	X	(SUB FOR AR71068)
6	R57451	BUSHING	6	- 403755	X	X	(SUB FOR R56186)
7	.....	PISTON	AR	- 403755	X	X	NSEP (ORD RE22678 OR RE22681)
8	RE15674	PISTON RING KIT	6	- 403755	X	X	KIT (3) (SUB FOR DD11831)

COPYRIGHT©1994 - 2008 DEERE & COMPANY Moline, Illinois All rights reserved

(2C08) PLATFORM LIFT CYLINDER
VERIN DE LA PLATE-FORME DE COUPE
SCHNEIDWERK-HUBZYLINDER
CILINDRO DI SOLLEVAMENTO DELLA PIATTAFORMA DI TAGLIO
CILINDRO ELEVADOR DE LA PLATAFORMA DE CORTE
SKARBORDSLYFTCYLINDER

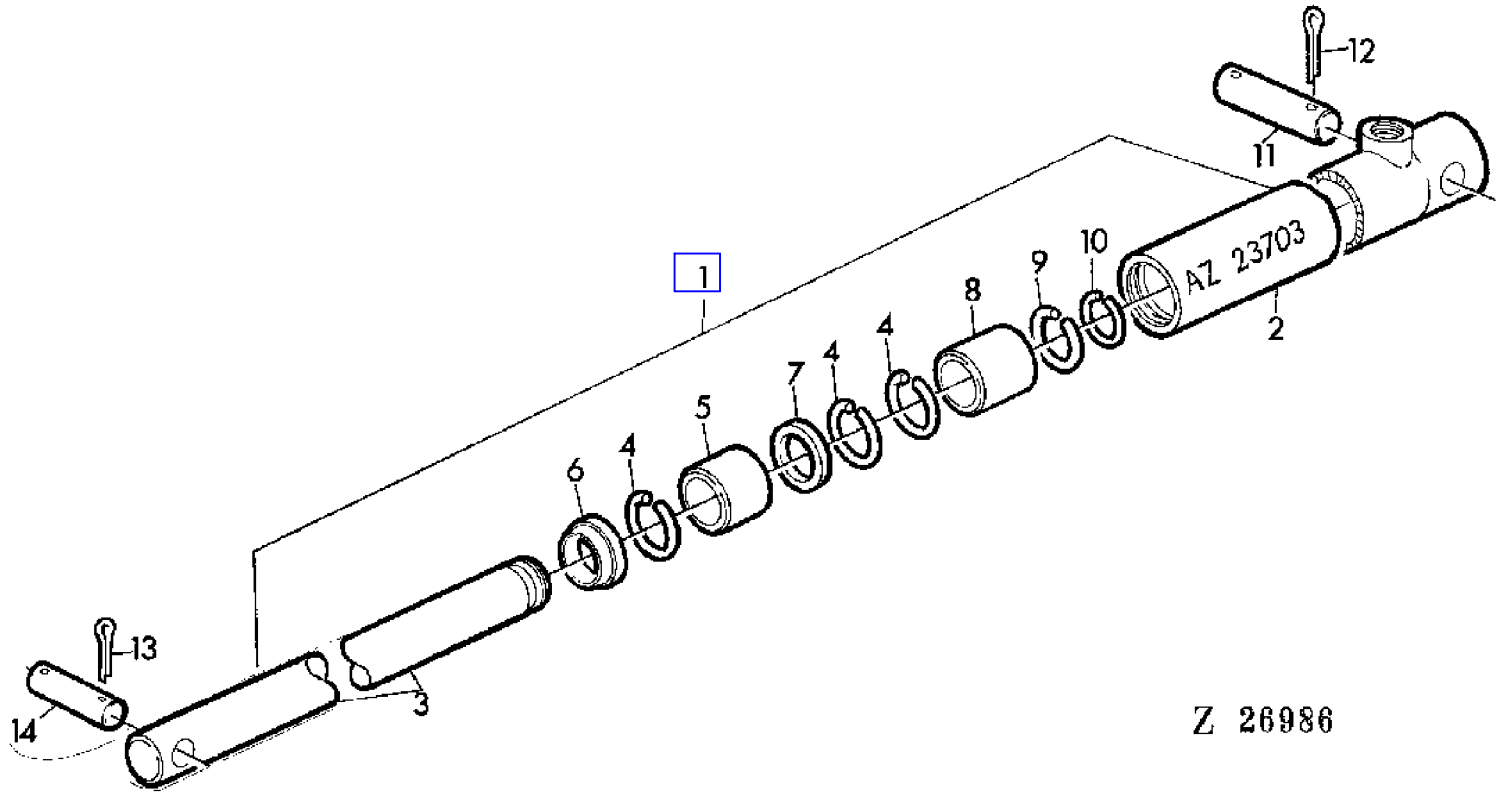

COPYRIGHT©1994 - 2008 DEERE & COMPANY Moline, Illinois All rights reserved

(2C08) PLATFORM LIFT CYLINDER
VERIN DE LA PLATE-FORME DE COUPE
SCHNEIDWERK-HUBZYLINDER
CILINDRO DI SOLLEVAMENTO DELLA PIATTAFORMA DI TAGLIO
CILINDRO ELEVADOR DE LA PLATAFORMA DE CORTE
SKARBORDSLYFTCYLINDER

KEY	PART NO.	PART NAME	QTY	SERIAL NO.	975	975HY/4	REMARKS
1	AZ23703	HYDRAULIC CYLINDER	AR	- 021686	X	X	INCL KEYS 2-10 (ORD AZ37512)
2	.....	HYDRAULIC CYLINDER BARREL	AR	- 021686	X	X	NSEP (ORD AZ37512)
3	.....	ROD	AR	- 021686	X	X	NSEP (ORD AZ37512)
4	.....	SNAP RING	AR	- 021686	X	X	(ORD AZ37842)
5	Z34002	BUSHING	AR	- 021686	X	X	
6	.....	SCRAPER RING	AR	- 021686	X	X	(ORD AZ37842)
7	.....	SCRAPER RING	AR	- 021686	X	X	(ORD AZ37842)
8	Z34003	BUSHING	AR	- 021686	X	X	
9	.....	SNAP RING	AR	- 021686	X	X	(ORD AZ37842)
10	.....	SNAP RING	AR	- 021686	X	X	(ORD AZ37842)
11	44M7006	PIN	AR		X	X	30H 11 X 125 X 108
12	11M7038	COTTER PIN	AR		X	X	6,3 X 45 MM
13	11M7028	COTTER PIN	AR		X	X	5 X 32 MM
14	45M7023	PIN	AR		X	X	22 X 90 X 82 MM
..	AZ37842	GASKET KIT	1	- 021686	X	X	KIT, INCL KEYS 4,6,7,9,10 (FOR AZ23703)

COPYRIGHT©1994 - 2008 DEERE & COMPANY Moline, Illinois All rights reserved

(2C09) PLATFORM LIFT CYLINDER (44 MM DIAMETER)
PLATE-FORME DE COUPE-VERINS (DIAMETRE 44MM)
SCHNEIDWERK-HUBZYLINDER (44MM DURCHMESSER)
CILINDRI SOLLEVAMENTO PIATTAFORMA (DIA 44MM)
CILINDROS ELEVADORES DE PLATAFORMA DE CORTE (DIA 44 MM)
LYFTCYLINDRAR FOR SKARBORD(DIA 44 MM)

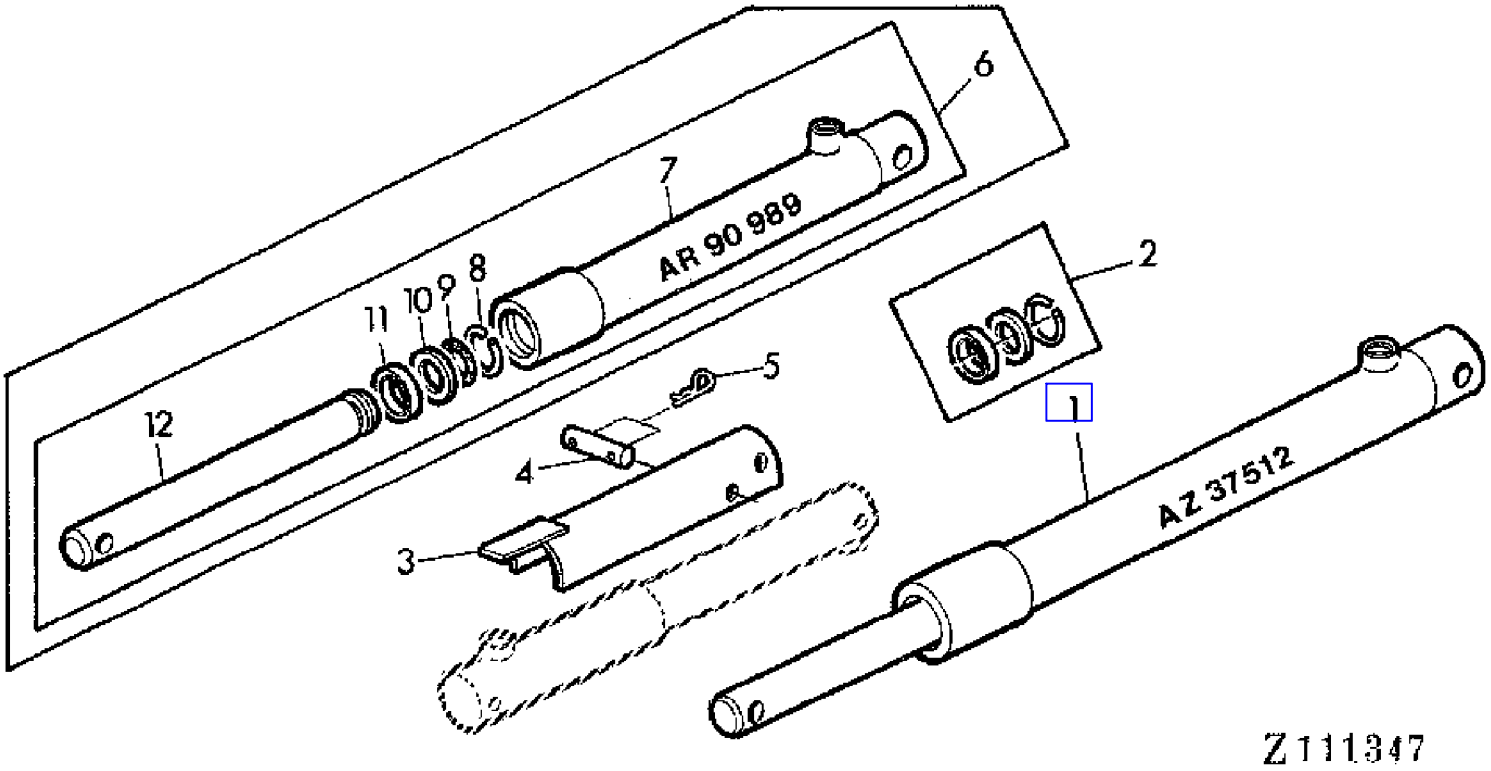

COPYRIGHT©1994 - 2008 DEERE & COMPANY Moline, Illinois All rights reserved

(2C09) PLATFORM LIFT CYLINDER (44 MM DIAMETER)
PLATE-FORME DE COUPE-VERINS (DIAMETRE 44MM)
SCHNEIDWERK-HUBZYLINDER (44MM DURCHMESSER)
CILINDRI SOLLEVAMENTO PIATTAFORMA (DIA 44MM)
CILINDROS ELEVADORES DE PLATAFORMA DE CORTE (DIA 44 MM)
LYFTCYLINDRAR FOR SKARBORD(DIA 44 MM)

KEY	PART NO.	PART NAME	QTY	SERIAL NO.	975	975HY	REMARKS
1	AZ37512	HYDRAULIC CYLINDER	2		X	X	(SUB FOR AR90989)
2	AZ37815	SEAL KIT	2		X	X	KIT (FOR AZ37512)
3	AZ22727	GUARD	AR		X	X	
4	Z33788	PIN	AR		X	X	
5	J16931	SPRING LOCKING PIN	AR		X	X	
6	AR90989	HYDRAULIC CYLINDER	2		X	X	(ORD AZ37512)
7	.....	HYDRAULIC CYLINDER BARREL	2		X	X	NSEP (ORD AZ37512)
8	.....	SNAP RING	2		X	X	(ORD AZ37841)
9	.....	O-RING	2		X	X	(ORD AZ37841)
10	.....	BACK-UP RING	2		X	X	(ORD AZ37841)
11	.....	SEAL	2		X	X	(ORD AZ37841)
12	.....	ROD	2		X	X	OD = 44 MM, NSEP (ORD AZ37512)
..	AZ37841	GASKET KIT	2		X	X	KIT, INCL KEYS 8-11 (FOR AR90989)

COPYRIGHT©1994 - 2008 DEERE & COMPANY Moline, Illinois All rights reserved

(2C10) PLATFORM LIFT CYLINDER (57MM DIAMETER)
PLATE-FORME DE COUPE-VERINS (DIAMETRE 57MM)
SCHNEIDWERK-HUBZYLINDER (57MM DURCHMESSER)
CILINDRI SOLLEVAMENTO PIATTAFORMA (DIA 57MM)
CILINDROS ELEVADORES DE PLATAFORMA DE CORTE (DIA 57MM)
LYFTCYLINDRAR FOR SKARBORD (DIA 57MM)

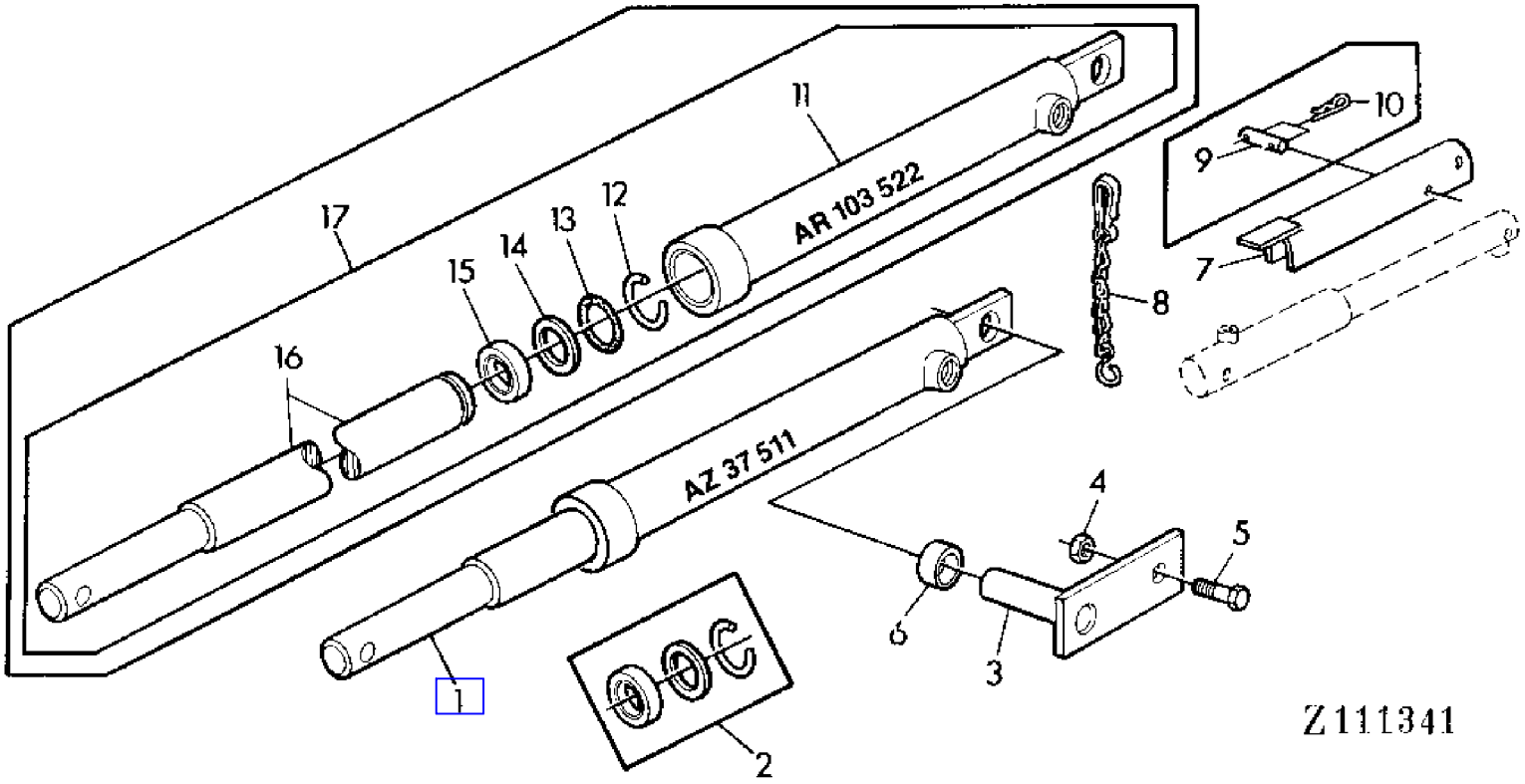

COPYRIGHT©1994 - 2008 DEERE & COMPANY Moline, Illinois All rights reserved

(2C10) PLATFORM LIFT CYLINDER (57MM DIAMETER)
PLATE-FORME DE COUPE-VERINS (DIAMETRE 57MM)
SCHNEIDWERK-HUBZYLINDER (57MM DURCHMESSER)
CILINDRI SOLLEVAMENTO PIATTAFORMA (DIA 57MM)
CILINDROS ELEVADORES DE PLATAFORMA DE CORTE (DIA 57MM)
LYFTCYLINDRAR FOR SKARBORD (DIA 57MM)

KEY	PART NO.	PART NAME	QTY	SERIAL NO.	975	975HY/4	REMARKS
1	AZ37511	HYDRAULIC CYLINDER	2		X	X	(SUB FOR AR103522)
2	AZ37849	GASKET KIT	2		X	X	KIT (FOR AZ37511)
3	AZ29898	HOLDER	2		X	X	
4	14M7167	LOCK NUT	AR		X	X	M10
5	19M7168	CAP SCREW	2		X	X	M10 X 30
6	Z40104	SPACER	4		X	X	
7	AZ29900	GUARD	AR		X	X	(ORD W/ AZ35224)
8	AZ35224	LINK CHAIN	AR		X	X	
9	Z33788	PIN	AR		X	X	
10	J16931	SPRING LOCKING PIN	AR		X	X	
11	.....	HYDRAULIC CYLINDER BARREL	1		X	X	NSEP (ORD AZ37511)
12	.....	SNAP RING	1		X	X	(ORD AZ37843)
13	R26863	O-RING	1		X	X	(SUB FOR CD14738)
14	.....	BACK-UP RING	1		X	X	(ORD AZ37843) (SUB FOR CD14734)
15	.....	SCRAPER RING	1		X	X	(ORD AZ37843)
16	.....	ROD	1		X	X	OD = 57 MM, NSEP (ORD AZ37511)
17	AR103522	HYDRAULIC CYLINDER	1		X	X	(ORD AZ37511)
..	AZ37843	GASKET KIT	2		X	X	KIT, INCL KEYS 12-15 (FOR AR103522)

COPYRIGHT©1994 - 2008 DEERE & COMPANY Moline, Illinois All rights reserved

(1H18) POSI-TORQUE BEARINGS(UPPER UNIT)
PALIER DU POSI-TORQ(PARTIE SUPERIEURE)
POSI-TORQ-LAGERUNG(OBERE EINHEIT)
CUSCINETTI POSI-TORQ(PARTE SUPERIORE)
ALOJAMIENTO "POSI-TORQ"(UNIDAD SUPERIOR)
POSI-TORQUE LAGER(OVRE ENHET)

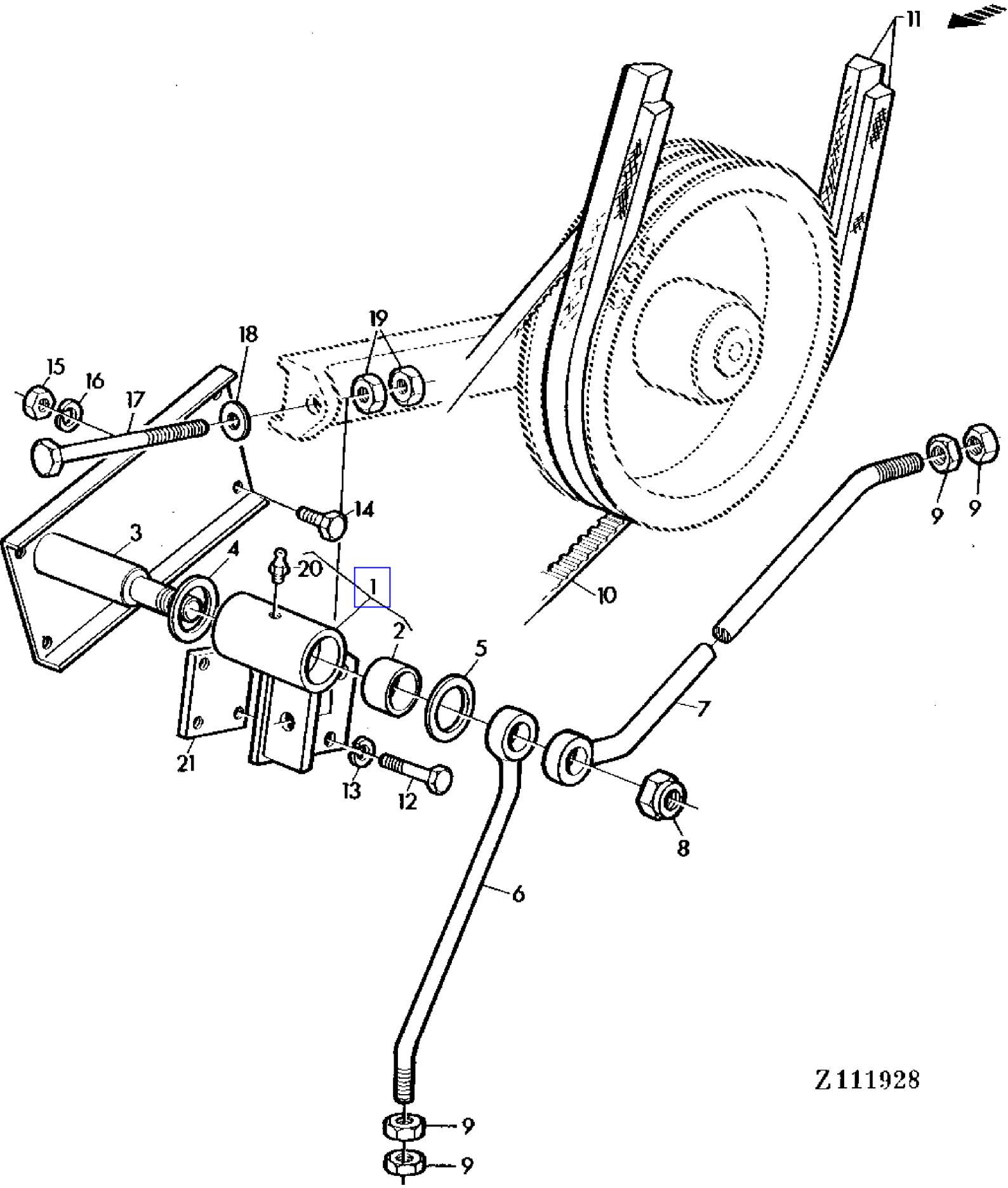

COPYRIGHT©1994 - 2008 DEERE & COMPANY Moline, Illinois All rights reserved

(1H18) POSI-TORQUE BEARINGS(UPPER UNIT)
PALIER DU POSI-TORQ(PARTIE SUPERIEURE)
POSI-TORQ-LAGERUNG(OBERE EINHEIT)
CUSCINETTI POSI-TORQ(PARTE SUPERIORE)
ALOJAMIENTO "POSI-TORQ"(UNIDAD SUPERIOR)
POSI-TORQUE LAGER(OVRE ENHET)

KEY	PART NO.	PART NAME	QTY	SERIAL NO.	975	975HY/4	REMARKS
1	AZ27210	BRACKET	1		X		INCL KEYS 2,20 (SUB FOR AZ22912)
2	Z34097	BUSHING	2		X		
3	AZ22911	RETAINER	1		X		
4	Z34089	WASHER	1		X		
5	24M7103	WASHER	1		X		18 MM
6	Z34098	EYEBOLT	2		X		
7	Z34090	EYEBOLT	1		X		
8	14M7170	LOCK NUT	1		X		M16
9	14M7142	NUT	4		X		M16
10	Z34099	BELT	1		X		
11	AZ22914	BELT SET	2		X		KIT
12	19M7214	CAP SCREW	4		X		M12 X 70
13	12M7014	LOCK WASHER	4		X		12 MM
14	19M7380	CAP SCREW	4		X		M10 X 22
15	14M7140	NUT	4		X		M10
16	12M7013	LOCK WASHER	4		X		10 MM
17	08H3782	CAP SCREW	1		X		1/2" X 10"
18	24M7111	WASHER	1		X		
19	14H809	NUT	2		X		1/2"
20	58M7004	LUBRICATION FITTING	1		X		
21	Z34095	BRACKET	1		X		

COPYRIGHT©1994 - 2008 DEERE & COMPANY Moline, Illinois All rights reserved

(1H22) POSI-TORQUE DRIVE
ENTRAINEMENT DU POSI-TORQ
POSI-TORQ-ANTRIEB
PULEGGE POSI-TORQ
MECANISMO DE DEL "POSI-TORQ"ACCIONAMIENTO
POSI-TORQUE VARIATOR

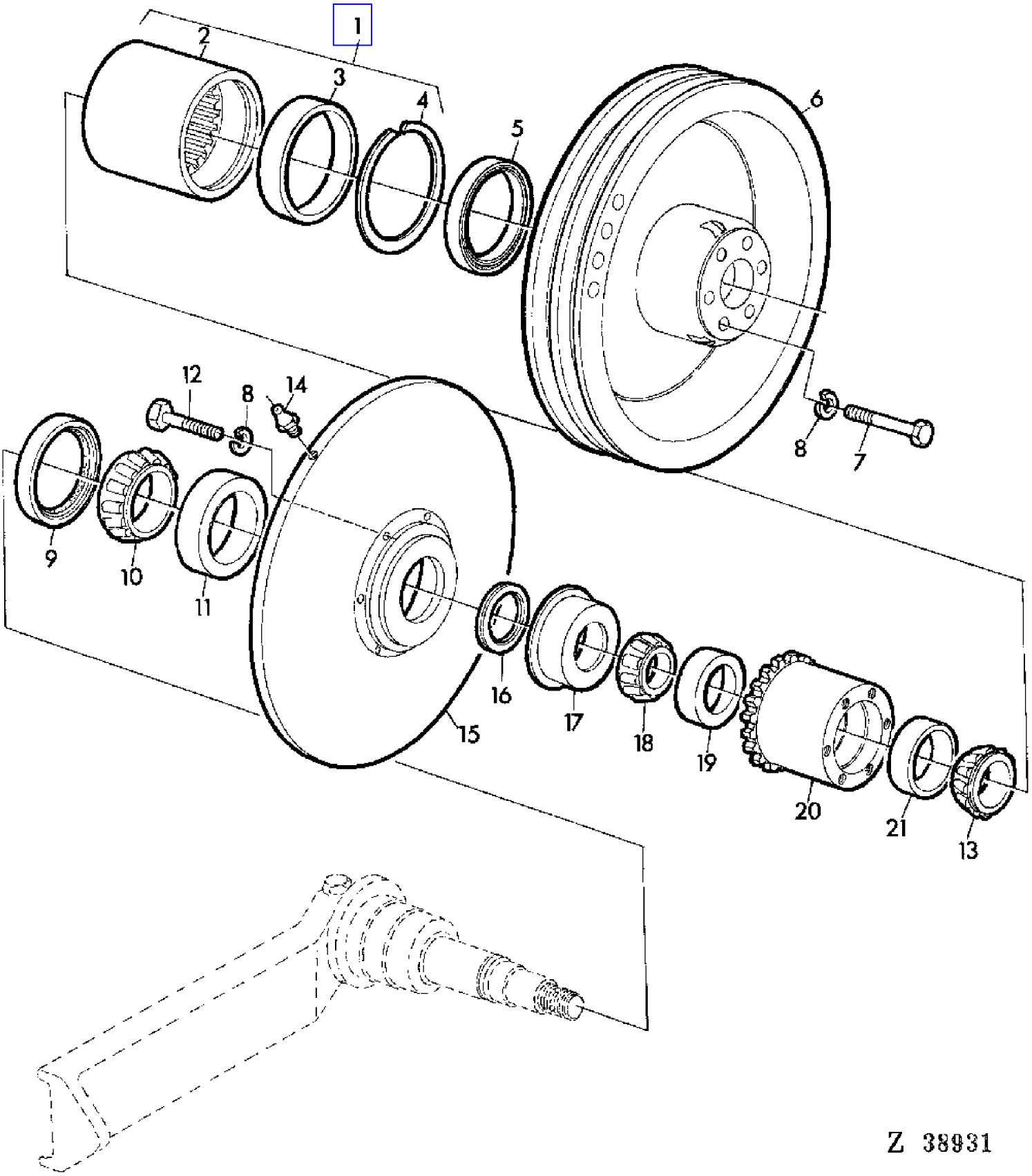

COPYRIGHT©1994 - 2008 DEERE & COMPANY Moline, Illinois All rights reserved

(1H22) POSI-TORQUE DRIVE
ENTRAINEMENT DU POSI-TORQ
POSI-TORQ-ANTRIEB
PULEGGE POSI-TORQ
MECANISMO DE DEL "POSI-TORQ"ACCIONAMIENTO
POSI-TORQUE VARIATOR

KEY	PART NO.	PART NAME	QTY	SERIAL NO.	975	975HY/4	REMARKS
1	AH87132	SLEEVE	1		X		ASSY, INCL KEYS 2-4
2	H85990	HUB	1		X		
3	H86011	SPACER	1		X		
4	P48691	SNAP RING	1		X		
5	AH87141	SEAL	1		X		
6	H84668	SHEAVE	1		X		
7	19H2552	CAP SCREW	6		X		3/8" X 11/8"
8	12H304	LOCK WASHER	12		X		3/8"
9	AH87140	SEAL	1		X		
10	JD9079	BEARING CONE	1		X		
11	JD9137	BEARING CUP	1		X		
12	19H2023	CAP SCREW	6		X		3/8" X 3-1/4"
13	JD8930	BEARING CUP	1		X		
14	JD7759	LUBRICATION FITTING	1		X		
15	H84667	HALF SHEAVE	1		X		
16	H85987	SNAP RING	1		X		
17	H86012	BUSHING	1		X		
18	JD8968	BEARING CONE	1		X		
19	JD7424	BEARING CUP	1		X		
20	H85991	HUB	1		X		
21	JD8252	BEARING CUP	1		X		

COPYRIGHT©1994 - 2008 DEERE & COMPANY Moline, Illinois All rights reserved

(1H24) POSI-TORQUE DRIVE (LOWER UNIT)
ENTRAINEMENT DU POSI-TORQ (PARTIE INFERIEURE)
POSI-TORQ-ANTRIEB (UNTEN)
COMANDO DEL POSI-TORQ (PARTE INFERIORE)
UNIDAD INFERIOR PARA ACCIONAMIENTO DEL POSI-TORQ
POSI-TORQUE VARIATOR(NEDRE ENHET)

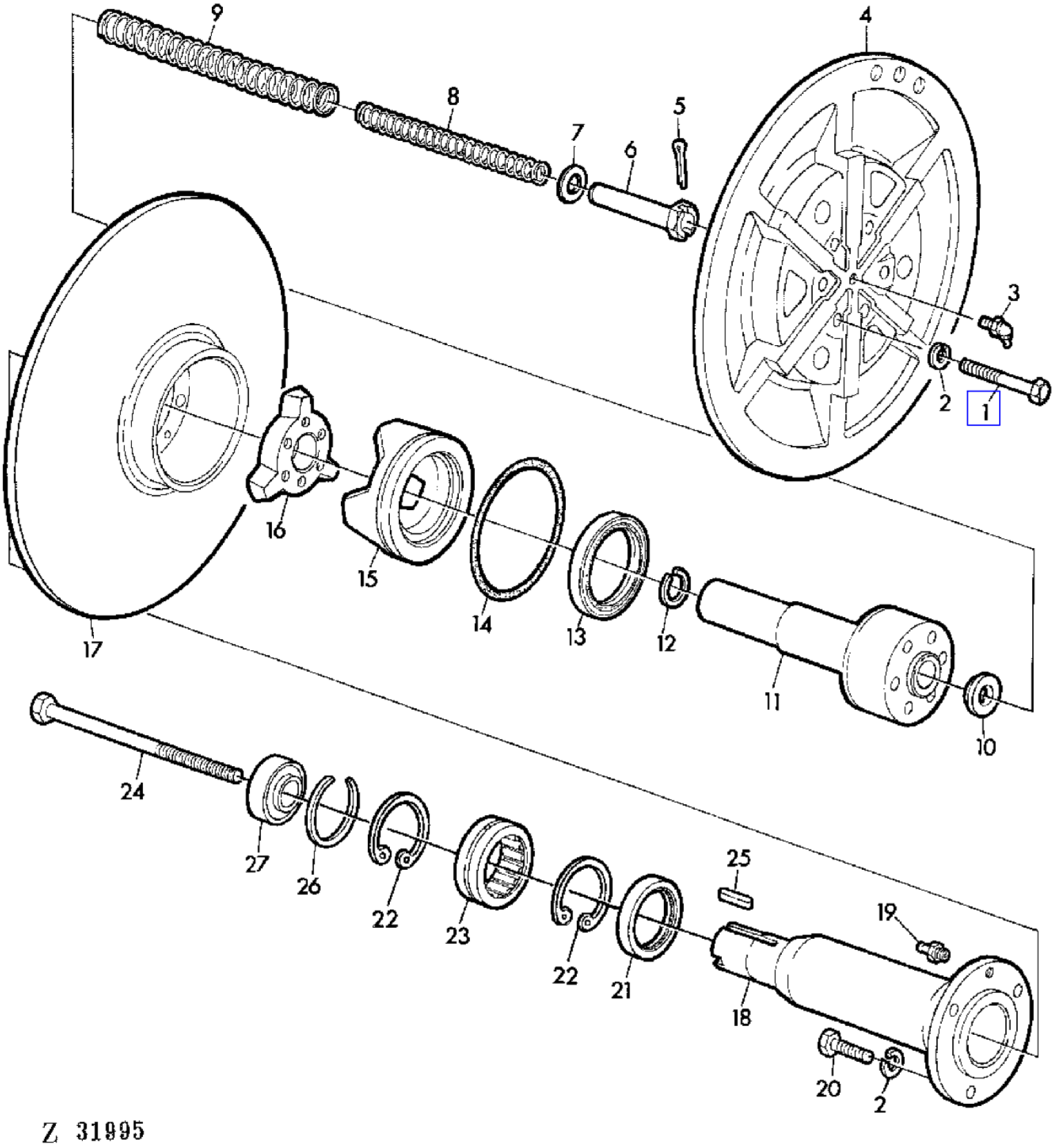

COPYRIGHT©1994 - 2008 DEERE & COMPANY Moline, Illinois All rights reserved

(1H24) POSI-TORQUE DRIVE (LOWER UNIT)
ENTRAINEMENT DU POSI-TORQ (PARTIE INFERIEURE)
POSI-TORQ-ANTRIEB (UNTEN)
COMANDO DEL POSI-TORQ (PARTE INFERIORE)
UNIDAD INFERIOR PARA ACCIONAMIENTO DEL POSI-TORQ
POSI-TORQUE VARIATOR(NEDRE ENHET)

KEY	PART NO.	PART NAME	QTY	SERIAL NO.	975	975HY/4	REMARKS
1	19H1781	CAP SCREW	6		X		1/2" X 3-1/2"
2	12H301	LOCK WASHER	9		X		1/2"
3	JD7760	LUBRICATION FITTING	1		X		
4	H84672	SHEAVE	1		X		
5	11H236	COTTER PIN	1		X		1/8" X 1"
6	Z34678	NUT	1		X		3/8"
7	24H1378	WASHER	1		X		11/16" X 1-1/2 X .134"
8	Z34679	COMPRESSION SPRING	1		X		
9	Z34692	COMPRESSION SPRING	1		X		
10	H86008	WASHER	1		X		
11	AZ35586	ROCKSHAFT	1		X		(SUB FOR AZ23720)
12	H85994	SNAP RING	1		X		
13	AH96135	SEAL	1		X		(SUB FOR AH87129)
14	H85996	O-RING	1		X		
15	H86659	CAM	1		X		
16	H86660	CAM	1		X		
17	H84666	SHEAVE	1		X		
18	AZ35585	SHAFT	1		X		(SUB FOR AZ22908)
19	JD7797	LUBRICATION FITTING	1		X		1/4"
20	19H1777	CAP SCREW	3		X		1/2" X 13/4"
21	AH87139	SEAL	1		X		
22	40M1873	SNAP RING	2		X		90 X 3 MM (SUB FOR H77821)
23	JD9913	BEARING	1		X		
24	Z34088	CAP SCREW	1		X		
25	T3142H	SHAFT KEY	1		X		
26	40M1871	SNAP RING	1		X		
27	JD10087	BALL BEARING	1		X		(SUB FOR JD8524)

COPYRIGHT©1994 - 2008 DEERE & COMPANY Moline, Illinois All rights reserved

(1H20) POSI-TORQUE DRIVE (UPPER UNIT)
ENTRAINEMENT DU POSI-TORQ(PARTIE SUPERIEURE)
POSI-TORQ-ANTRIEB(OBEN)
COMANDO DEL POSI-TORQ(PARTE SUPERIORE)
UNIDAD SUPERIOR PARA ACCIONAMIENTO DEL POSI-TORQ
POSI-TORQUE VARIATOR (OVRE ENHET)

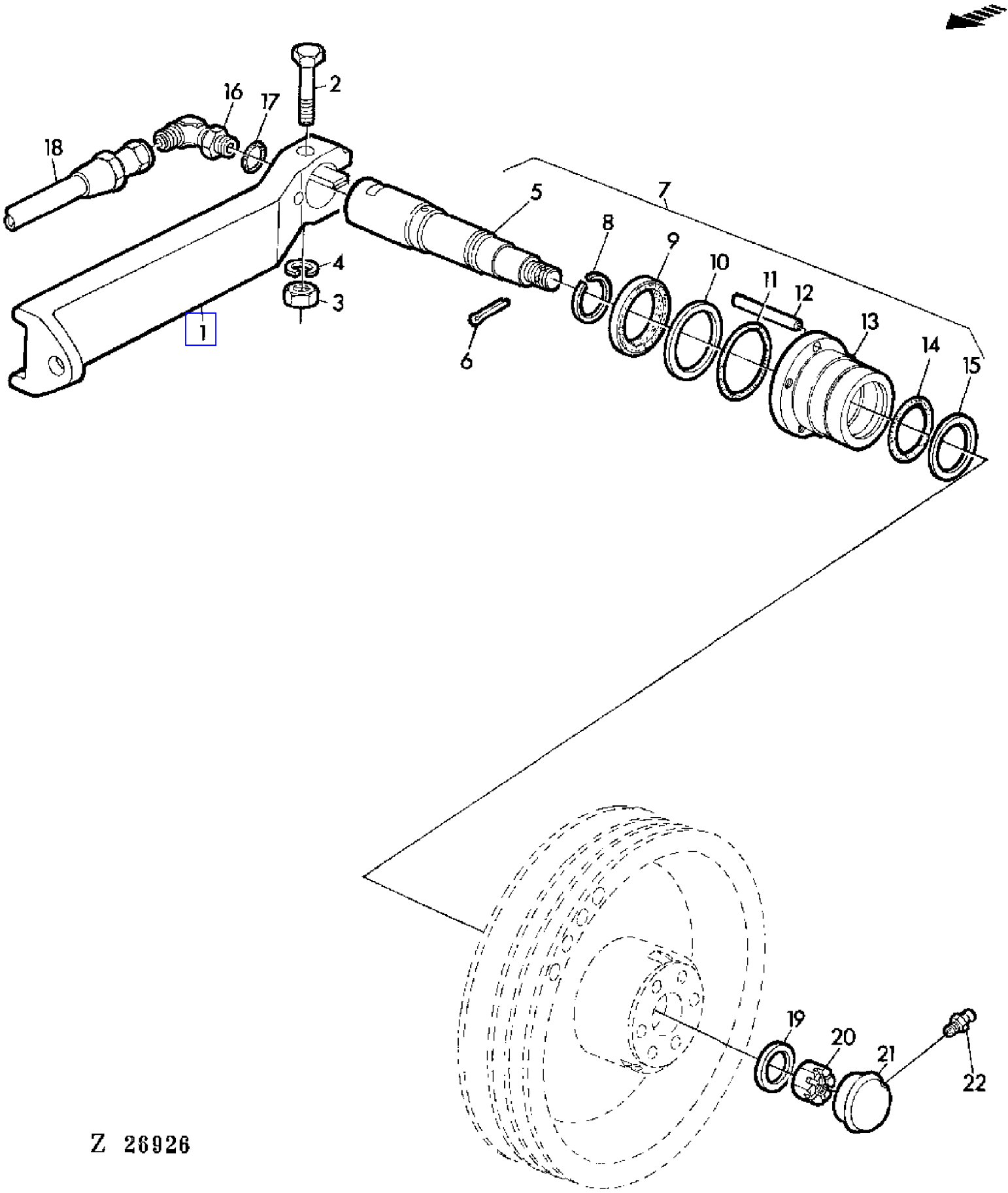

COPYRIGHT©1994 - 2008 DEERE & COMPANY Moline, Illinois All rights reserved

(1H20) POSI-TORQUE DRIVE (UPPER UNIT)
ENTRAINEMENT DU POSI-TORQ(PARTIE SUPERIEURE)
POSI-TORQ-ANTRIEB(OBEN)
COMANDO DEL POSI-TORQ(PARTE SUPERIORE)
UNIDAD SUPERIOR PARA ACCIONAMIENTO DEL POSI-TORQ
POSI-TORQUE VARIATOR (OVRE ENHET)

KEY	PART NO.	PART NAME	QTY	SERIAL NO.	975	975HY/4	REMARKS
1	H84669	ARM	1		X		
2	19H2133	CAP SCREW	1		X		5/8" X 4-1/2"
3	14H760	NUT	1		X		5/8"
4	12H294	LOCK WASHER	1		X		5/8"
5	H85989	ROD	1		X		
6	11H218	COTTER PIN	1		X		3/16" X 1-1/2"
7	AH87130	CYLINDER	1		X		ASSY, INCL KEYS 5,6,8-15
8	M3827T	SNAP RING	1		X		
9	A16529	SEAL	1		X		
10	H30463	BACK-UP RING	1		X		
11	R26863	O-RING	1		X		
12	34H323	SPRING PIN	1		X		
13	H85993	HUB	1		X		
14	U11017	O-RING	1		X		
15	H85988	BACK-UP RING	1		X		
16	AH63565	ELBOW FITTING	1		X		
17	R28782	O-RING	1		X		
18	AZ23700	HYDRAULIC HOSE	1		X		
19	T25922	WASHER	1		X		
20	14H902	NUT	1		X		3/4"
21	H89171	CAP	1		X		
22	JD7797	LUBRICATION FITTING	1		X		

COPYRIGHT©1994 - 2008 DEERE & COMPANY Moline, Illinois All rights reserved

(1C19) PRECLEANER/AIR CLEANER
PREFILTRE/FILTRE A AIR
VORFILTER (ZYKLON)/LUFTFILTER
PREFILTRO/FILTRO ARIA
PREPURIFICADOR/PURIFICADOR DE AIRE
FORRENARE/LUFTRENARE

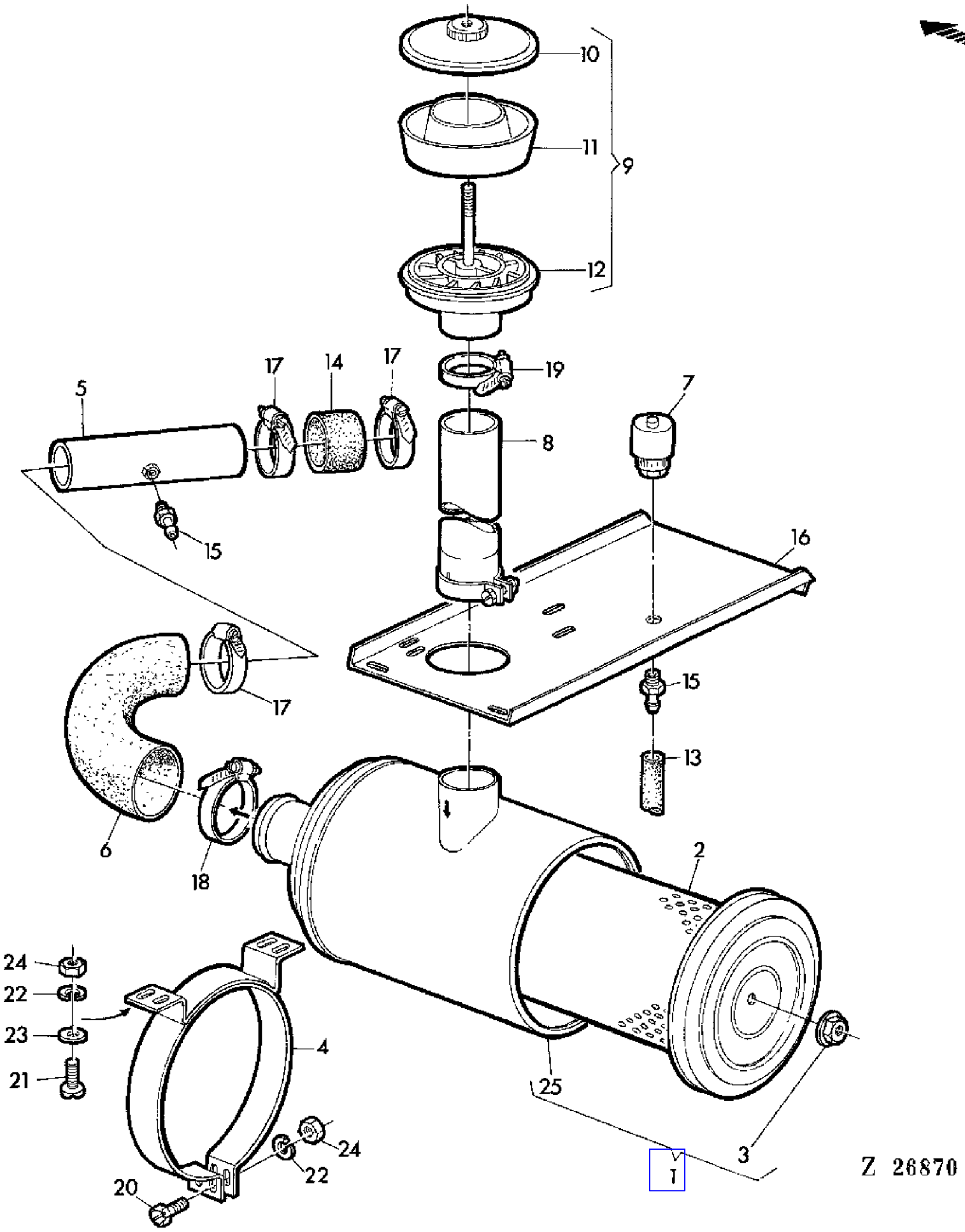

COPYRIGHT©1994 - 2008 DEERE & COMPANY Moline, Illinois All rights reserved

(1C19) PRECLEANER/AIR CLEANER
PREFILTRE/FILTRE A AIR
VORFILTER (ZYKLON)/LUFTFILTER
PREFILTRO/FILTRO ARIA
PREPURIFICADOR/PURIFICADOR DE AIRE
FORRENARE/LUFTRENARE

KEY	PART NO.	PART NAME	QTY	SERIAL NO.		975	975HY/4	REMARKS
1	AZ23638	AIR CLEANER	1		- 015187	X		ASSY, INCL KEYS 2,3,25 MANN+HUMMEL,4544065104
2	AZ23642	FILTER ELEMENT	1		- 015187	X		MANN+HUMMEL,023440
3	AZ23641	NUT	1		- 015187	X		MANN+HUMMEL,0169110000
	Z35884	HOSE	1	004831	- 015187	X		
4	AZ23637	BAIL	1		- 015187	X		
5	AZ23636	PIPE	1		- 004830	X		
	AZ24874	PIPE	1	004831	- 015187	X		
6	Z34575	HOSE	1		- 015187	X		
7	AT25983	AIR RESTRICTION INDICATOR	1		- 015187	X		DONALDSON,RBX 00-2252
8	AZ23041	PIPE	1		- 015187	X		
9	AH85336	PRESCREENER	1		- 015187	X		
10	AR1729R	COVER	1		- 015187	X		
11	R28795	DUST BOWL	1		- 015187	X		
12	AZ21510	HOUSING	1		- 015187	X		
13	Z34577	HOSE	1		- 015187	X		
14	Z34578	HOSE	1		- 004830	X		
	Z35884	HOSE	1	004831	- 015187	X		
15	Z34576	FITTING	2		- 015187	X		
16	Z34143	HOLDER	1		- 004830	X		
	Z35886	HOLDER	1	004831	- 015187	X		
17	Z30340	CLAMP	3		- 015187	X		
18	Z29925	CLAMP	1		- 015187	X		
19	Z32659	CLAMP	1		- 015187	X		
20	19M7163	CAP SCREW	2		- 015187	X		8 X 25 MM
21	21M7125	SCREW	4		- 015187	X		8 X 25 MM
22	12M7008	LOCK WASHER	6		- 015187	X		8 MM
23	24M7036	WASHER	4		- 015187	X		9 MM
24	14M7029	NUT	6		- 015187	X		8 MM
25	.....	AIR FILTER	6		- 015187	X		NSEP (ORD AZ23638)

COPYRIGHT©1994 - 2008 DEERE & COMPANY Moline, Illinois All rights reserved

(3D17) PRESSURZING FAN-AIR CONDITIONED CAB
SOUFFLANTES DE PRESSURISATION-CABINE CLIMATISEE
GEBLAESE-KABINE MIT KLIMAANLAGE
VENTILATORI DI PRESSURIZZAZIONE-CABINA CONDIZIONATA
VENTILADOR DE PRESURIZACION-CABINA CON AIRE ACOND
LUFTFLAEKT-HYTT MED LUFTKONDITIONERING

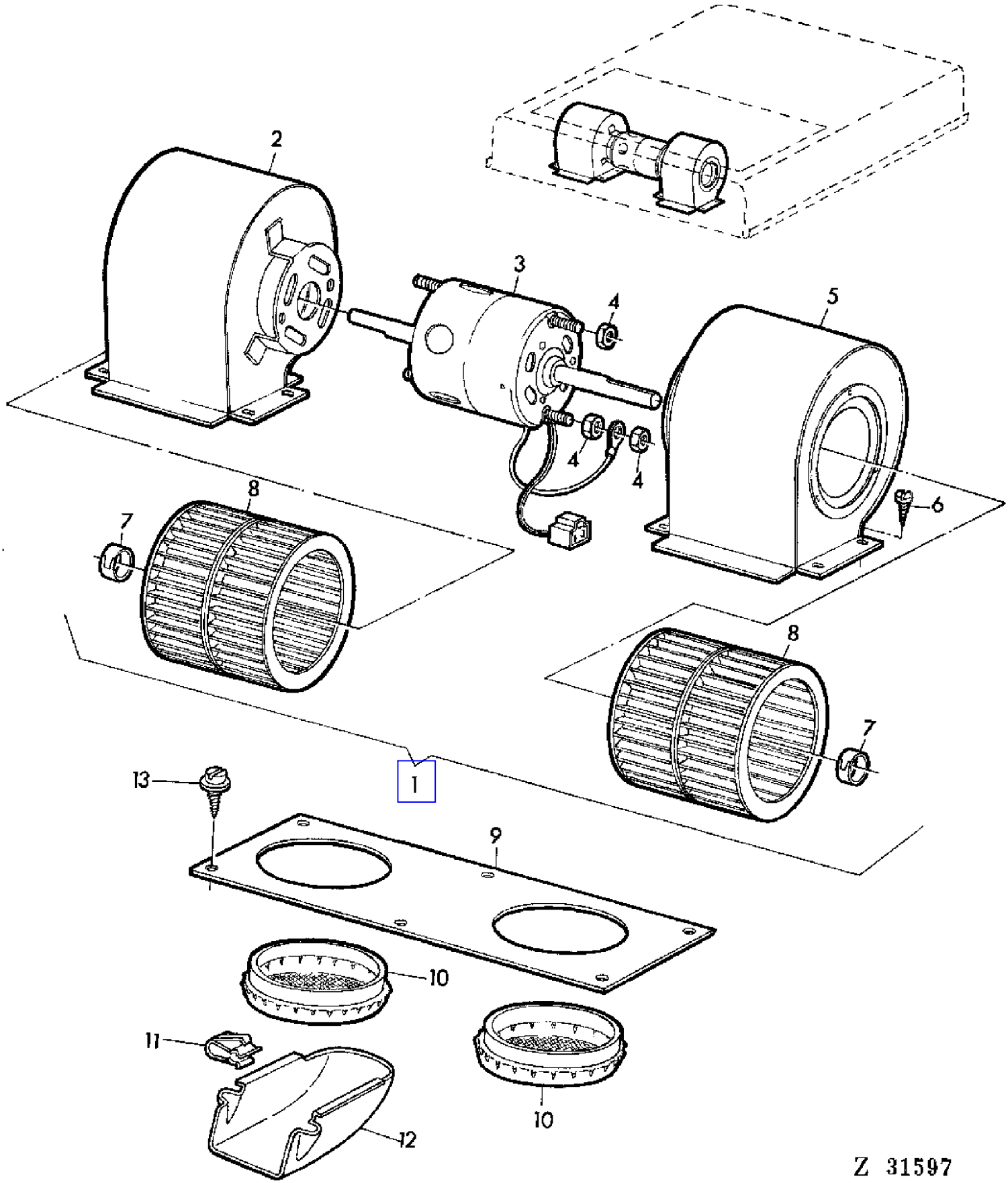

COPYRIGHT©1994 - 2008 DEERE & COMPANY Moline, Illinois All rights reserved

(3D17) PRESSURZING FAN-AIR CONDITIONED CAB
SOUFFLANTES DE PRESSURISATION-CABINE CLIMATISEE
GEBLAESE-KABINE MIT KLIMAANLAGE
VENTILATORI DI PRESSURIZZAZIONE-CABINA CONDIZIONATA
VENTILADOR DE PRESURIZACION-CABINA CON AIRE ACOND
LUFTFLAEKT-HYTT MED LUFTKONDITIONERING

KEY	PART NO.	PART NAME	QTY	SERIAL NO.	975	975HY/4	REMARKS
1	AH89816	FAN	1		X	X	ASSY
2	AH89813	CASE	1		X	X	RH
3	AH80194	MOTOR	1		X	X	
4	14H778	NUT	5		X	X	0.190"
5	AH89814	CASE	1		X	X	LH
6	19H1919	CAP SCREW	8		X	X	1/4" X 5/8"
7	H84108	CLIP	2		X	X	
8	H84107	WHEEL	2		X	X	
9	H81685	PANEL	1		X	X	
10	AH80205	LOUVER	2		X	X	
11	H83282	CLIP	6		X	X	
12	H83062	DEFLECTOR	2		X	X	
13	AH87867	SCREW	16		X	X	1/4" X 3/4"

COPYRIGHT©1994 - 2008 DEERE & COMPANY Moline, Illinois All rights reserved

(3E22) QUICK-COUPLER
ATTACHE RAPIDE
SCHNELLVERSCHLUSS
ATTACCO RAPIDO
ENGANCHE RAPIDO
SNABBKOPPLING

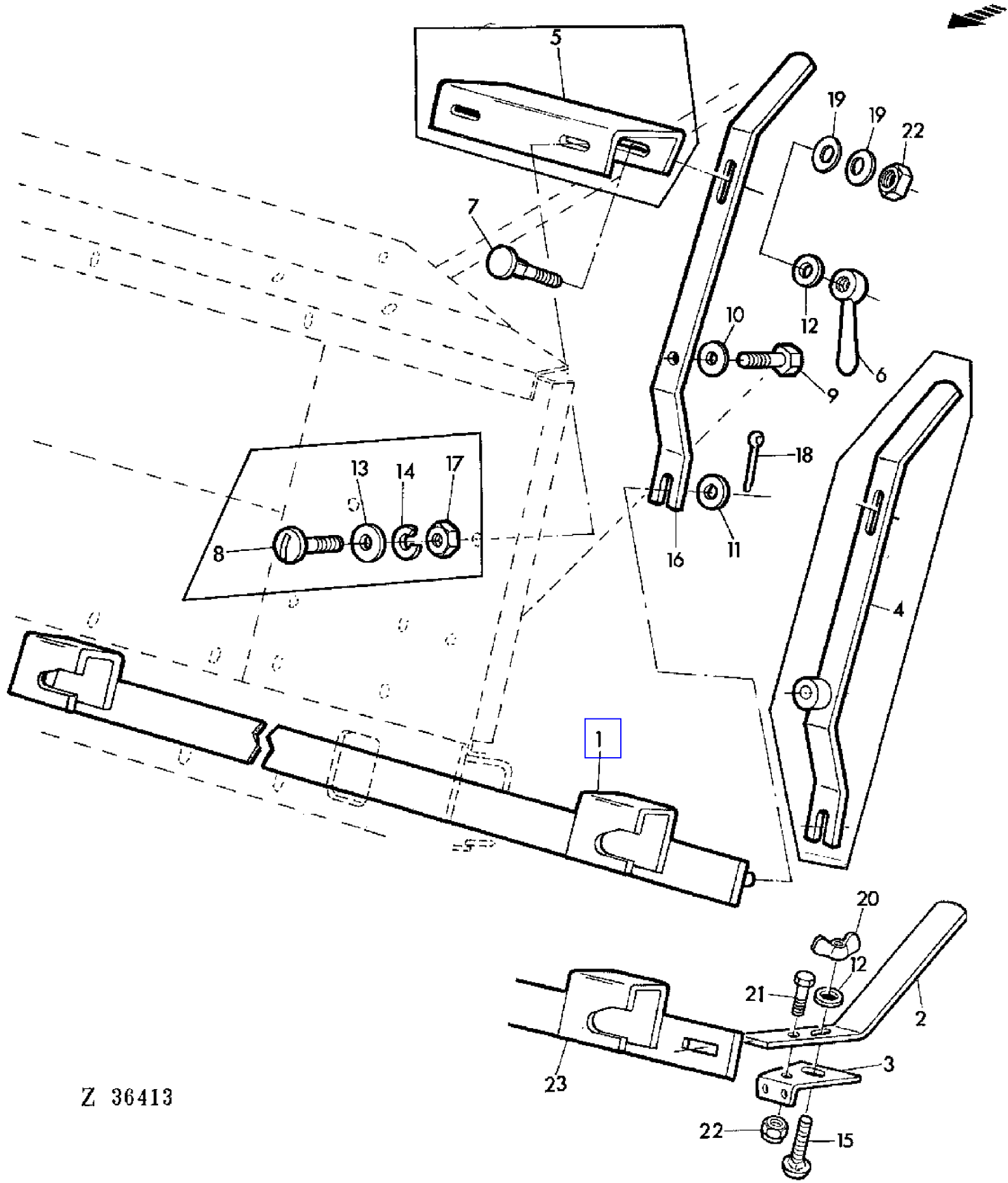

COPYRIGHT©1994 - 2008 DEERE & COMPANY Moline, Illinois All rights reserved

(3E22) QUICK-COUPLER
ATTACHE RAPIDE
SCHNELLVERSCHLUSS
ATTACCO RAPIDO
ENGANCHE RAPIDO
SNABBKOPPLING

KEY	PART NO.	PART NAME	QTY	SERIAL NO.	975	975HY/4	REMARKS
1	AZ20527	RAIL	1		X	X	
2	Z38422	LEVER	1		X	X	(A)
3	Z38429	HOLDER	1		X	X	(A)
4	AZ20528	LEVER	1	- 024617	X	X	
5	Z31864	CHANNEL	1	- 024617	X	X	
6	Z22758	NUT	1		X	X	AR
7	03M7097	BOLT	1		X	X	M10 X 30
8	21M7089	SCREW	2	- 024617	X	X	M8 X 20
9	19M7158	CAP SCREW	1		X	X	M12 X 45
10	24M7047	WASHER	AR		X	X	13 MM
11	24M7028	WASHER	AR		X	X	10,5 MM
12	24M7040	WASHER	AR		X	X	11 MM
13	24M7055	WASHER	AR	- 024617	X	X	8,4 MM
14	12M7008	LOCK WASHER	AR	- 024617	X	X	8 MM
15	03M7098	BOLT	1		X	X	M10 X 35
16	Z37726	LEVER	1	024618 -	X	X	
17	14M7029	NUT	AR	- 024617	X	X	M8
18	11M7012	COTTER PIN	2		X	X	3 X 18 MM
19	Z22631	DISK SPRING	2		X	X	AR
20	14M7025	WING NUT	AR		X	X	M10, AR
21	19M7168	CAP SCREW	1		X	X	M10 X 30
22	14M7167	LOCK NUT	AR		X	X	M10
23	AZ26264	RAIL	1		X	X	(A)

(A) FOR FEEDER CONVEYOR LONG
POUR CONVOYEUR D'ALIMENTATION LONG
FUER LANGEN SCHRAEGFOERDERER
PER COLLO ALIMENTATORE LUNGO
PARA ELEVADOR DE MIES LARGO
FOR LANG INMATNINGSELEVATOR

COPYRIGHT©1994 - 2008 DEERE & COMPANY Moline, Illinois All rights reserved

(1B20) RADIATOR
RADIATEUR
KUEHLER
RADIATORE
RADIADOR
KYLARE

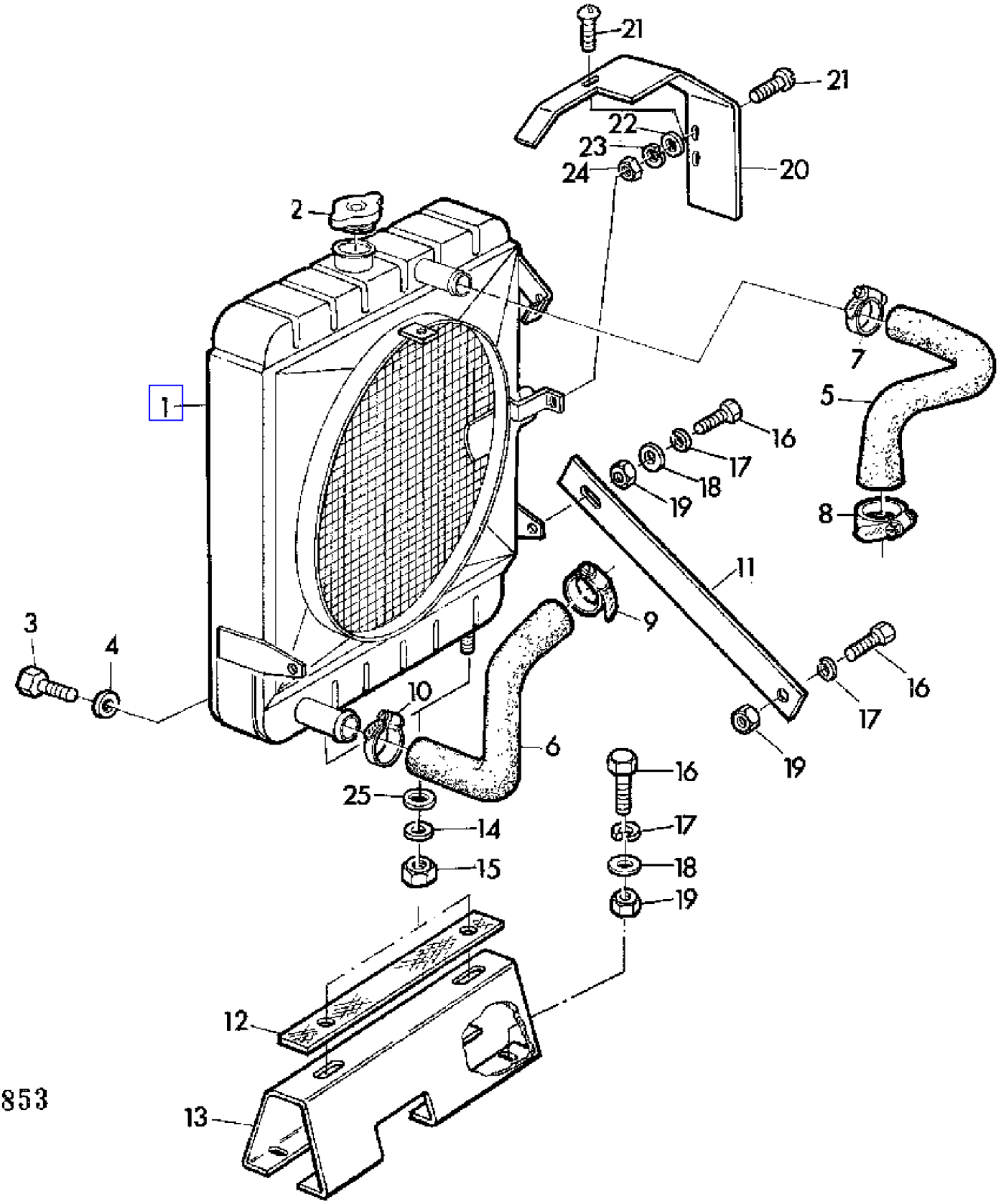

COPYRIGHT©1994 - 2008 DEERE & COMPANY Moline, Illinois All rights reserved

(1B20) RADIATOR
RADIATEUR
KUEHLER
RADIATORE
RADIADOR
KYLARE

KEY	PART NO.	PART NAME	QTY	SERIAL NO.	975	975HY/4	REMARKS
1	AZ23833	RADIATOR	1		X		ASSY, INCL KEYS 2,3,4
2	Z29121	FILLER CAP	1		X		
3	15M7020	DRAIN PLUG	AR		X		14 X 1,5 MM
4	51M4269	RING	AR		X		14 X 18 MM
5	Z34787	HOSE	1		X		UP
6	Z34788	HOSE	1		X		LOW
7	Z21160	CLAMP	1		X		
8	Z30340	CLAMP	1		X		
9	Z22032	CLAMP	1		X		
10	Z21162	CLAMP	1		X		
11	Z34785	STRAP	2		X		LGTH = 535 MM
12	Z31661	LINING	1		X		
13	Z34784	SUPPORT	1		X		
14	24M7038	WASHER	2		X		14 MM
15	14M7169	LOCK NUT	2		X		M14
16	19M7163	CAP SCREW	8		X		M8 X 25
17	12M7008	LOCK WASHER	8		X		8 MM
18	24M7036	WASHER	6		X		9 MM
19	14M7029	NUT	8		X		M8
20	Z35113	GUARD	1		X		
21	21M7087	SCREW	2		X		6 X 12 MM
22	24M7088	WASHER	2		X		6,6 MM
23	12M7012	LOCK WASHER	2		X		6 MM
24	14M7027	NUT	2		X		M6
25	Z31385	STRAP	AR		X		

COPYRIGHT©1994 - 2008 DEERE & COMPANY Moline, Illinois All rights reserved

(1B22) RADIATOR
RADIATEUR
KUEHLER
RADIATORE
RADIADOR
KYLARE

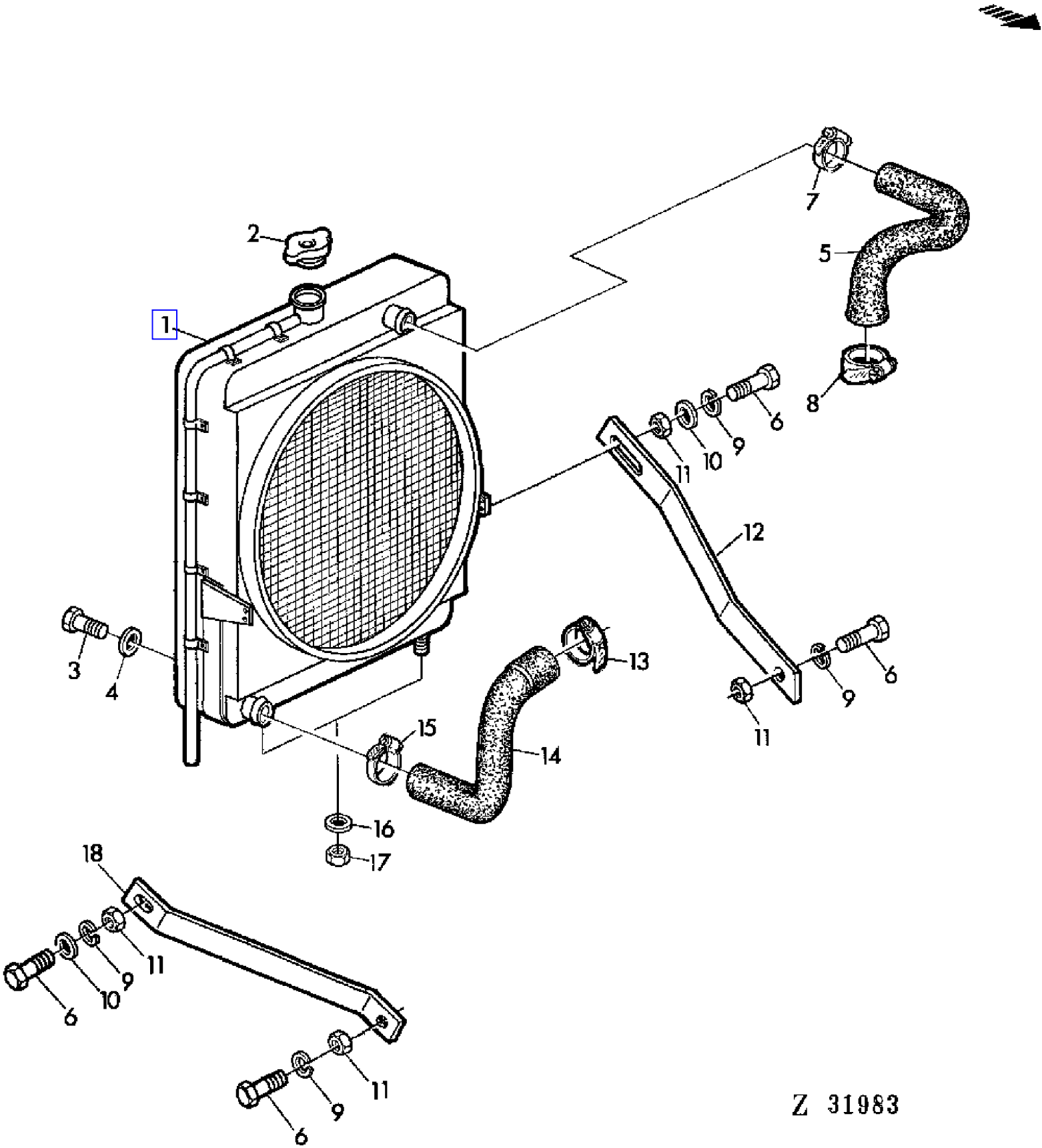

COPYRIGHT©1994 - 2008 DEERE & COMPANY Moline, Illinois All rights reserved

(1B22) RADIATOR
RADIATEUR
KUEHLER
RADIATORE
RADIADOR
KYLARE

KEY	PART NO.	PART NAME	QTY	SERIAL NO.	975	975HY/4	REMARKS
1	AZ34455	RADIATOR	1			X	INCL KEYS 2,3,4 (SUB FOR AZ26142)
2	Z29121	FILLER CAP	1			X	
3	15M7020	DRAIN PLUG	AR			X	14 X 1,5 MM
4	51M4269	RING	AR			X	14 X 18 MM
5	Z37190	HOSE	1			X	UP
6	19M7163	CAP SCREW	8			X	M8 X 25
7	Z21160	CLAMP	1			X	
8	Z30340	CLAMP	1			X	
9	12M7008	LOCK WASHER	8			X	8 MM
10	24M7036	WASHER	6			X	9 MM
11	14M7029	NUT	8			X	M8
12	Z37195	BRACE	1			X	
13	Z22032	CLAMP	1			X	
14	Z37188	HOSE	1			X	LOW
15	Z21162	CLAMP	1			X	
16	24M7047	WASHER	2			X	13 MM
17	14M7168	LOCK NUT	2			X	M12
18	Z37608	RETAINER	1			X	

COPYRIGHT©1994 - 2008 DEERE & COMPANY Moline, Illinois All rights reserved

(4A23) RASP BAR CYLINDER
BATTEUR
DRESCHTROMMEL
BATTITORE
CILINDRO DESGRANADOR
TROSKCYLINDER

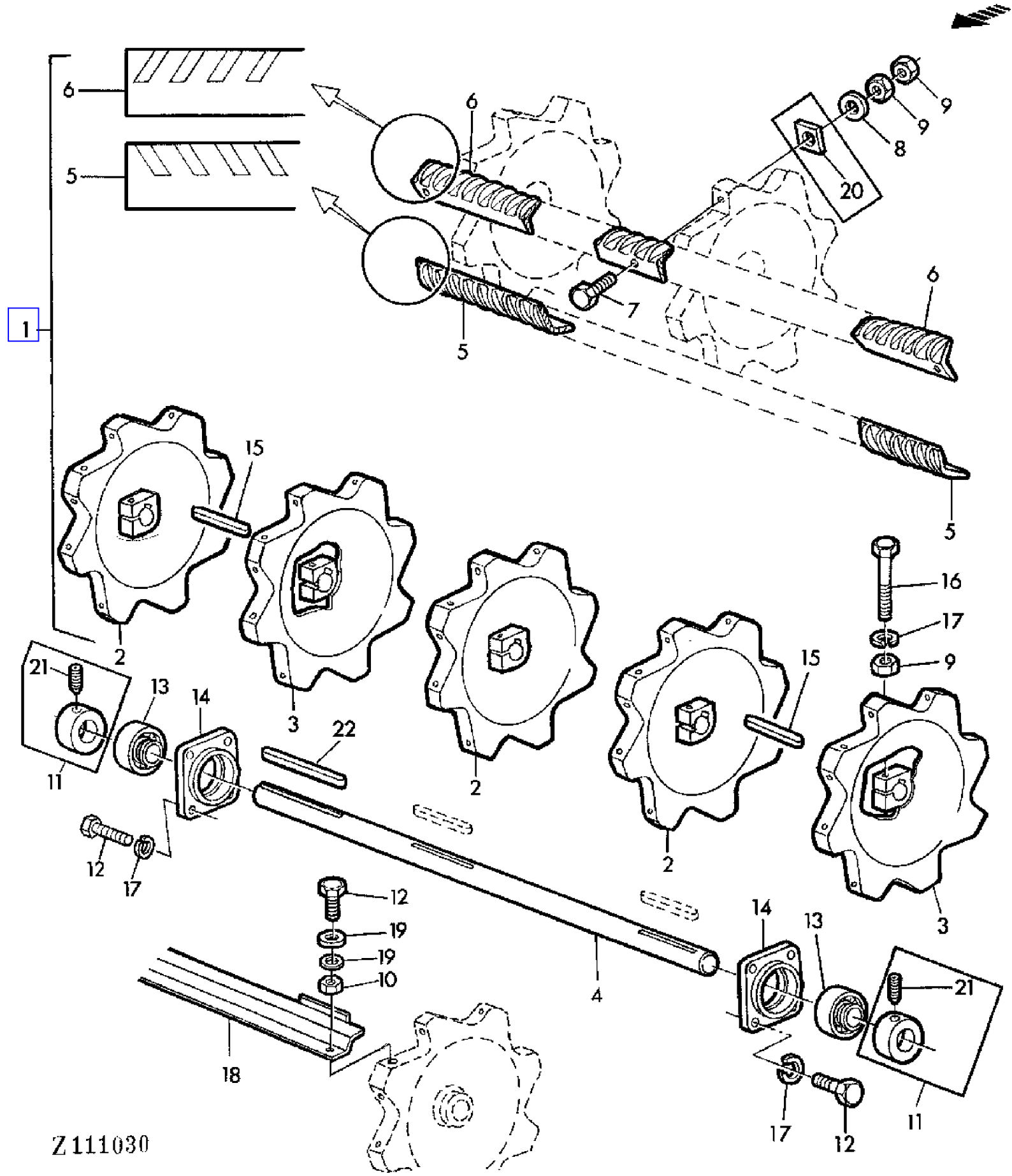

COPYRIGHT©1994 - 2008 DEERE & COMPANY Moline, Illinois All rights reserved

(4A23) RASP BAR CYLINDER
BATTEUR
DRESCHTROMMEL
BATTITORE
CILINDRO DESGRANADOR
TROSKCYLINDER

KEY	PART NO.	PART NAME	QTY	SERIAL NO.	975	975HY/4	REMARKS
1	AZ24991	RASP-BAR CYLINDER	1		X	X	ASSY (SUB FOR AZ19854)
2	AZ36269	THRESHING CYL HEAD (W/HUB)	3		X	X	(ORD W/ 12M7014, 14M7031, 19M7349) (SUB FOR AZ19436, AZ24888, AZ32419, Z20001, Z35899)
3	AZ24887	THRESHING CYL HEAD (W/HUB)	2		X	X	(SUB FOR AZ19435)
4	Z42163	SHAFT	1		X	X	(SUB FOR Z30815)
5	AZ13335	RASP BAR	2		X	X	RH PACKG (2)
6	AZ13336	RASP BAR	2		X	X	LH PACKG (2)
7	19M7182	CAP SCREW	40		X		M12 X 50
	19M7171	CAP SCREW	AR			X	M12 X 35
8	24M7111	WASHER	AR		X	X	13 MM
9	14M7031	NUT	AR		X	X	M12
10	14M7168	LOCK NUT	AR		X	X	M12
11	AZ35559	ECCENTRIC LOCKING COLLAR	2		X	X	
12	19M7285	CAP SCREW	AR		X	X	M12 X 30
13	AZ19432	BALL BEARING	2		X	X	
14	Z11331	HOUSING	2		X	X	(SUB FOR Z10745, Z11118)
15	49M7016	SHAFT KEY	2		X	X	12 X 8 X 80 MM
16	19M7349	CAP SCREW	AR		X	X	M12 X 95
17	12M7014	LOCK WASHER	AR		X	X	12 MM
18	AZ34122	PLATE	1		X	X	(A) PACKG (2) (SUB FOR AZ20676)
19	24M7047	WASHER	AR		X	X	13 MM
20	Z11052	WASHER	40		X		AR
21	AZ19845	SET SCREW	2		X	X	
22	49M7031	SHAFT KEY	1		X		12 X 8 X 280 MM

(A) FOR MAIZE
POUR MAIS
FUER MAIS
PER MAIS
PARA MAIZ
FOR MAJS

COPYRIGHT©1994 - 2008 DEERE & COMPANY Moline, Illinois All rights reserved

(2A08) REAR AXLE
ESSIEU ARRIERE
HINTERACHSE
ASSALE POSTERIORE
PALIER
BAKAXEL

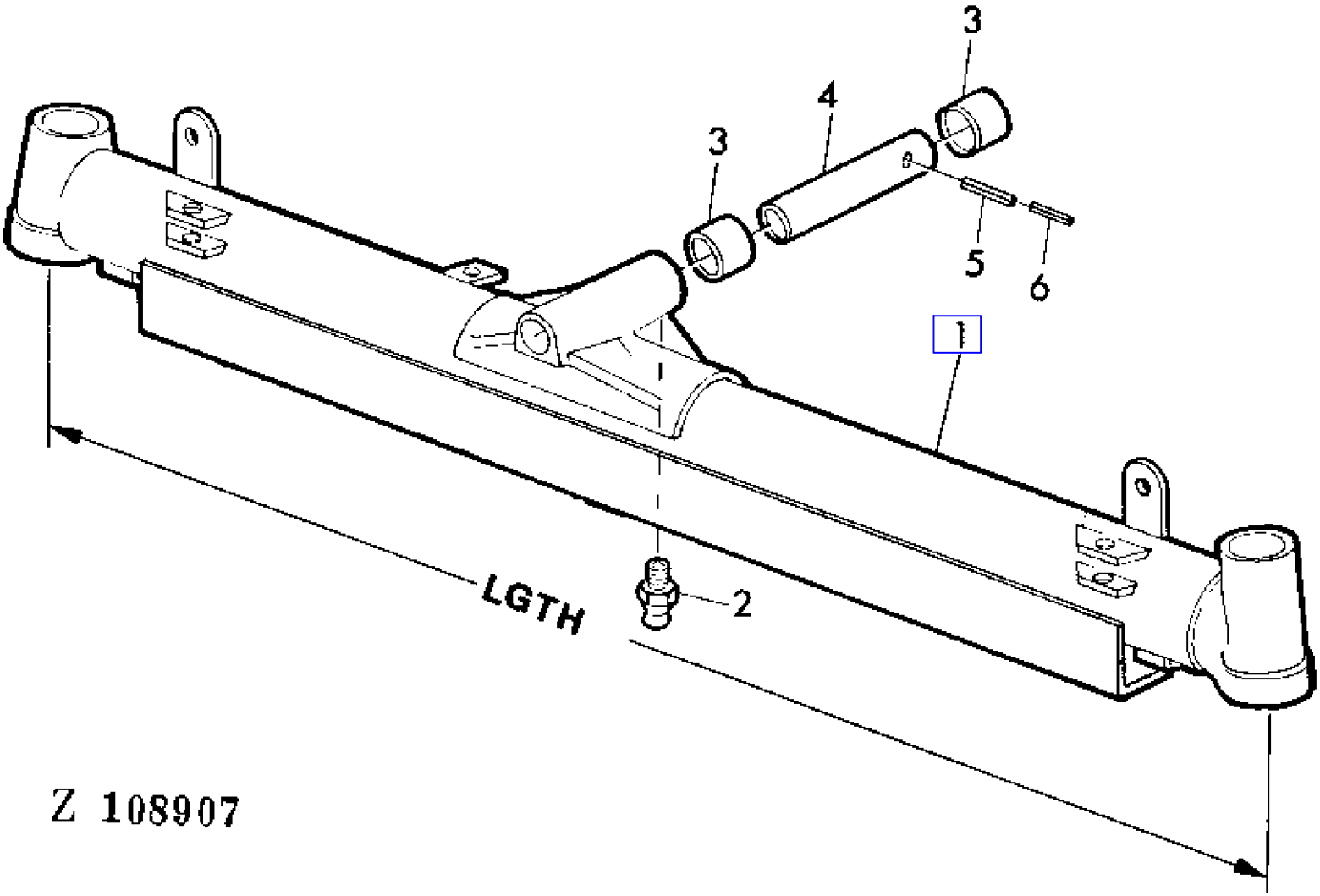

COPYRIGHT©1994 - 2008 DEERE & COMPANY Moline, Illinois All rights reserved

(2A08) REAR AXLE
ESSIEU ARRIERE
HINTERACHSE
ASSALE POSTERIORE
PALIER
BAKAXEL

KEY	PART NO.	PART NAME	QTY	SERIAL NO.		975	975HY	REMARKS
1	AZ25047	REAR AXLE	1		- 023197	X	X	LGTH = 1966 MM
	AZ27906	REAR AXLE	1		- 023197	X	X	LGTH = 2276 MM (SUB FOR AZ23115)
	AZ28784	REAR AXLE	1	023198	-	X	X	LGTH = 1966 MM
	AZ28785	REAR AXLE	1	023198	-	X	X	LGTH = 2276 MM (SUB FOR AZ28786)
2	58M7004	LUBRICATION FITTING	1			X	X	M6 X 1
3	Z21575	BUSHING	2			X	X	
4	Z21596	KINGPIN	1			X	X	
5	34M7048	SPRING PIN	1			X	X	8 X 45 MM
6	34M7036	SPRING PIN	1			X	X	5 X 45 MM

COPYRIGHT©1994 - 2008 DEERE & COMPANY Moline, Illinois All rights reserved

(2E19) REAR AXLE SUPPORT BRACKET
SUPPORT D'ESSIEU ARRIERE
HINTERACHS KONSOLE
SUPPORTO DELL'ASSALE POSTERIORE
SOPORTE DEL EJE TRASERO
BAKAXELFASTE

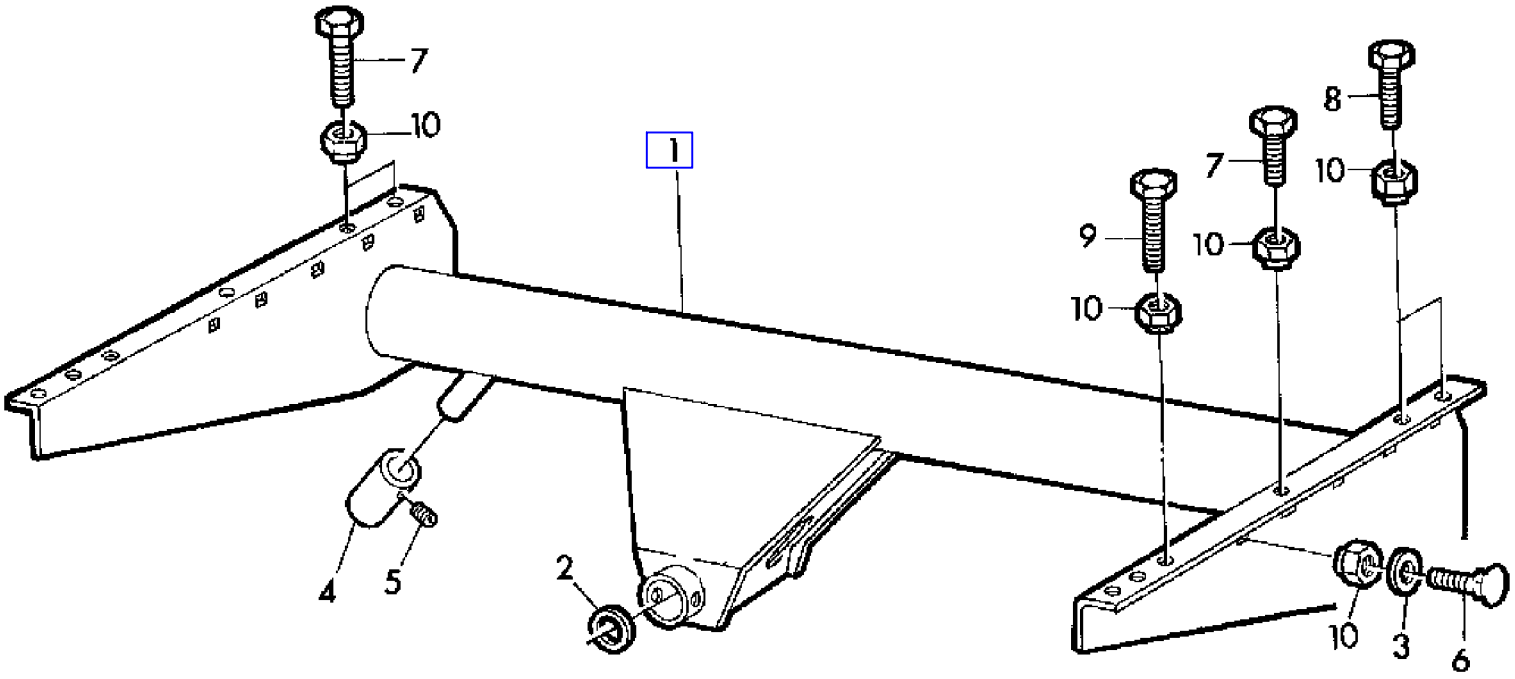

Z 31521

COPYRIGHT©1994 - 2008 DEERE & COMPANY Moline, Illinois All rights reserved

(2E19) REAR AXLE SUPPORT BRACKET
SUPPORT D'ESSIEU ARRIERE
HINTERACHS KONSOLE
SUPPORTO DELL'ASSALE POSTERIORE
SOPORTE DEL EJE TRASERO
BAKAXELFASTE

KEY	PART NO.	PART NAME	QTY	SERIAL NO.	975	975HY/4	REMARKS
1	AZ21549	REAR AXLE SUPPORT	1		X	X	
2	L19162	SHIM	AR		X	X	
3	24M7111	WASHER	AR		X	X	13 MM
4	Z37585	PIN	2		X	X	(A)
5	22M7080	SET SCREW	2		X	X	(A) M8 X 8
6	09M7023	BOLT	8		X	X	12 X 35 MM
7	19M7171	CAP SCREW	8		X	X	M12 X 35
8	19M7387	CAP SCREW	AR		X	X	M11 X 40
9	19M7158	CAP SCREW	AR		X	X	M12 X 45
10	14M7168	LOCK NUT	AR		X	X	M12

(A) WITH 9.5-24 TIRES ONLY
UNIQUEMENT AVEC PNEUS 9.5-24
NUR BEI BEREIFUNG 9.5-24
SOLTANTO CON PNEUMATICI 9.5-24
TAN SOLO CON NEUMATICOS 9.5-24
ENDAST VID DACK 9.5-24

COPYRIGHT©1994 - 2008 DEERE & COMPANY Moline, Illinois All rights reserved

(2A09) REAR AXLE V-SUPPORT
SUPPORT EN V ESSIEU ARRIERE
V-VERSTREBUNG HINTERACHSE
SUPPORTO A V PER L'ASSALE POSTERIORE
TIRANTES EN V PARA REFUERZO DEL EJE TRASERO
FORSTARKNING FOR BAKAXEL

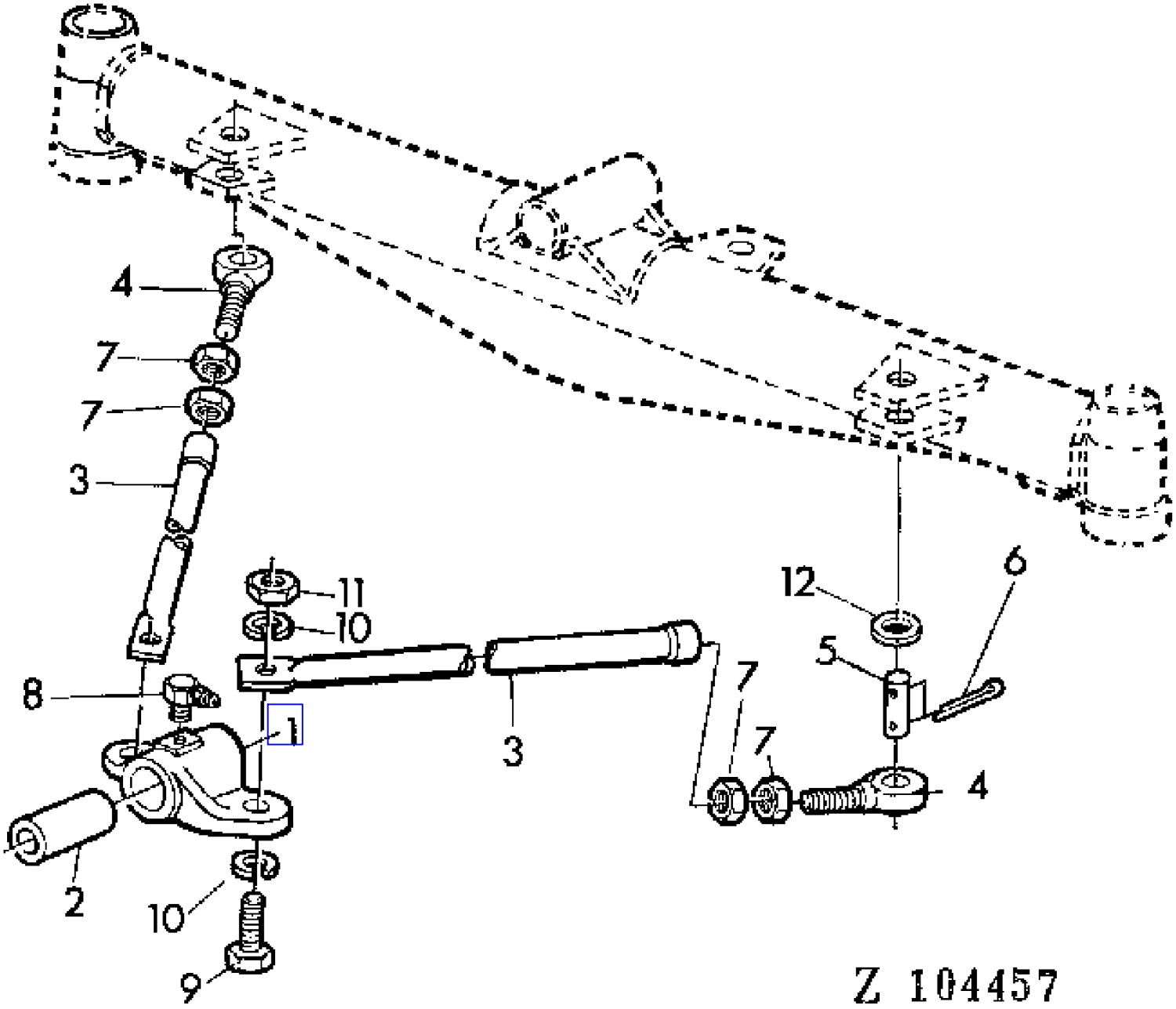

COPYRIGHT©1994 - 2008 DEERE & COMPANY Moline, Illinois All rights reserved

(2A09) REAR AXLE V-SUPPORT
SUPPORT EN V ESSIEU ARRIERE
V-VERSTREBUNG HINTERACHSE
SUPPORTO A V PER L'ASSALE POSTERIORE
TIRANTES EN V PARA REFUERZO DEL EJE TRASERO
FORSTARKNING FOR BAKAXEL

KEY	PART NO.	PART NAME	QTY	SERIAL NO.	975	975HY/4	REMARKS
1	Z10793	BEARING	1		X	X	
2	Z31724	BUSHING	1		X	X	
3	AZ20375	BRACE	2		X	X	
4	21M7328	EYEBOLT	2		X	X	24 X 120 MM
5	44M7046	PIN	2		X	X	22H9 X 75 X 59 (SUB FOR 45M7025)
6	11M7029	COTTER PIN	4		X	X	5 X 36 MM
7	14M7212	NUT	4		X	X	M24
8	58M7008	LUBRICATION FITTING	1		X	X	
9	19M7487	CAP SCREW	2		X	X	M20 X 50
10	12M7039	LOCK WASHER	4		X	X	20 MM
11	14M7144	NUT	2		X	X	M20
12	24M7090	WASHER	2		X	X	22 MM

COPYRIGHT©1994 - 2008 DEERE & COMPANY Moline, Illinois All rights reserved

(2F06) REAR SIDE PANELS
PAROIS LATERALES ARRIERE
HINTERE SEITENWAENDE
PANNELLI LATERALI POSTERIORI
PANELES TRASEROS
BAKRE SIDOPANELER

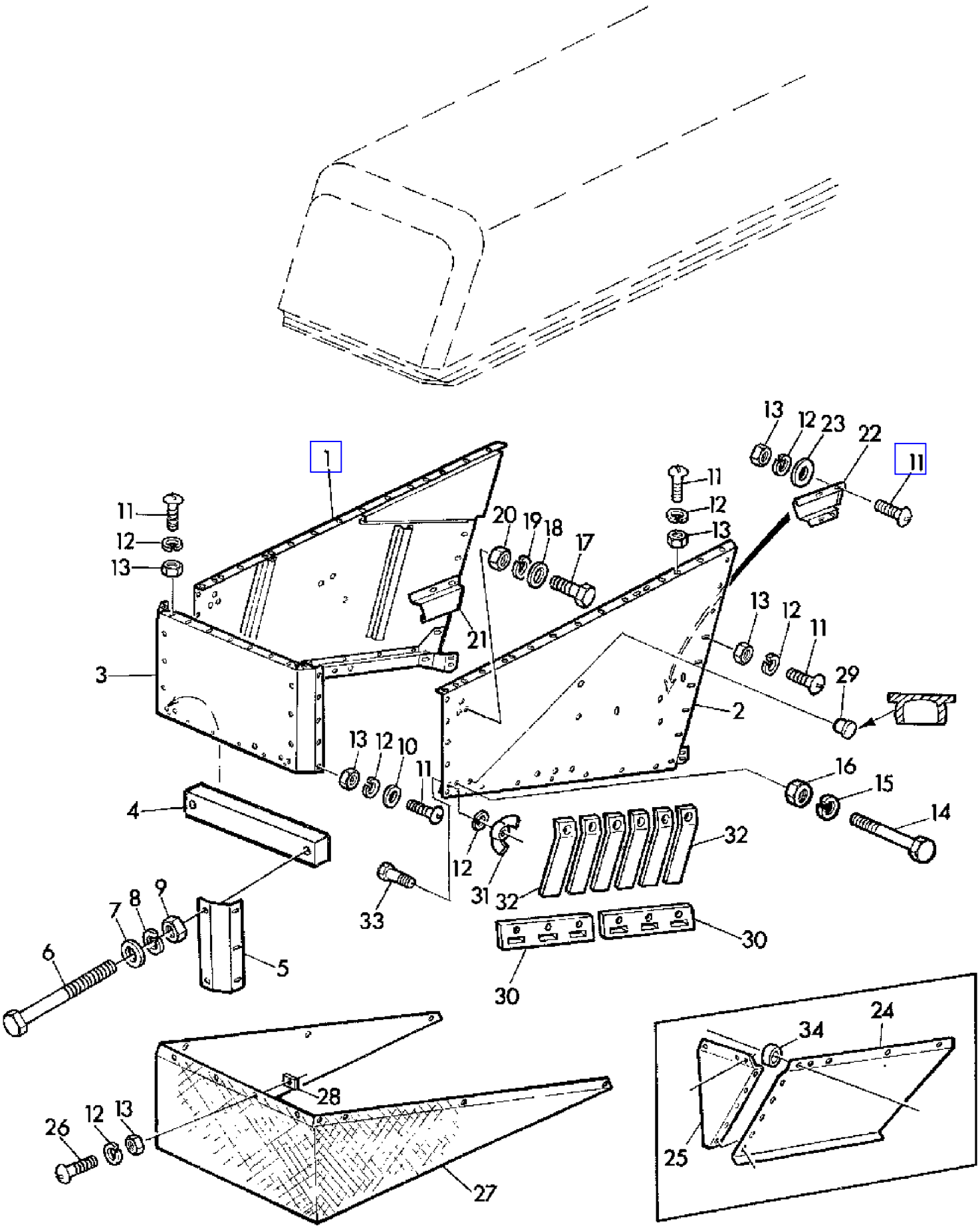

Z 31527

COPYRIGHT©1994 - 2008 DEERE & COMPANY Moline, Illinois All rights reserved

(2F06) REAR SIDE PANELS
PAROIS LATERALES ARRIERE
HINTERE SEITENWAENDE
PANNELLI LATERALI POSTERIORI
PANELES TRASEROS
BAKRE SIDOPANELER

KEY	PART NO.	PART NAME	QTY	SERIAL NO.	975	975HY/4	REMARKS
1	AZ28402	SIDE WALL	1		X	X	LH (SUB FOR AZ22720)
2	AZ28403	SIDE WALL	1		X	X	RH (SUB FOR AZ22721)
3	AZ22724	PANEL	1		X	X	
4	Z32407	WEIGHT	1		X	X	
5	Z33776	SHEET	2		X	X	(A)
6	19M7494	CAP SCREW	AR		X	X	(A) M12 X 70
7	24M7102	WASHER	AR		X	X	(A) 14 MM
8	12M7014	LOCK WASHER	AR		X	X	(A) 12 MM
9	14M7031	NUT	AR		X	X	(A) M12
10	24M7088	WASHER	AR		X	X	6,6 MM
11	21M7031	SCREW	AR		X	X	M6 X 15
12	12M7012	LOCK WASHER	AR		X	X	6 MM
13	14M7027	NUT	AR		X	X	M6
14	19M7183	CAP SCREW	AR		X	X	M10 X 40
15	12M7013	LOCK WASHER	AR		X	X	10 MM
16	14M7140	NUT	AR		X	X	M10
17	19M7139	CAP SCREW	AR		X	X	M8 X 20
18	24M7036	WASHER	AR		X	X	9 MM
19	12M7008	LOCK WASHER	AR		X	X	8 MM
20	14M7029	NUT	AR		X	X	M8
21	Z33935	REINFORCEMENT	1	003651 -	X	X	
22	Z33934	REINFORCEMENT	1	003651 -	X	X	
23	Z26250	WASHER	AR		X	X	
24	AZ22704	SHEET	1	- 016667	X		(A)
25	Z33734	SHEET	1	- 016667	X		(A)
26	21M7085	SCREW	AR		X	X	(A) M6 X 20
27	Z33710	CANVAS	1		X	X	
28	Z33085	PLATE	AR		X	X	(A)
29	Z31546	PLUG	AR		X	X	13 MM
	Z31547	PLUG	AR		X	X	16 MM
30	Z37698	HOLDER	AR	016668 -	X	X	
31	14M6662	WING NUT	AR		X	X	M6
32	Z37699	ANGLE	AR	016668 -	X	X	
33	19M7286	CAP SCREW	AR		X	X	M6 X 25
34	Z29770	SPACER	4	- 016667	X		(A)

(A) SPECIAL EQUIPMENT
EQUIPEMENT SPECIAL
SONDERAUSRUESTUNG
EQUIPAGGIAMENTO SPECIALE
EQUIPO ESPECIAL
SPECIALUTRUSTNING

COPYRIGHT©1994 - 2008 DEERE & COMPANY Moline, Illinois All rights reserved

(2A15) REAR WHEELS WITH HUB
ROUES ARRIERE ET MOYEU
HINTERRAEDER MIT NABEN
RUOTE POSTERIORI E MOZZO
RUEDAS TRASERAS CON CUBOS
BAKHJUL MED NAV

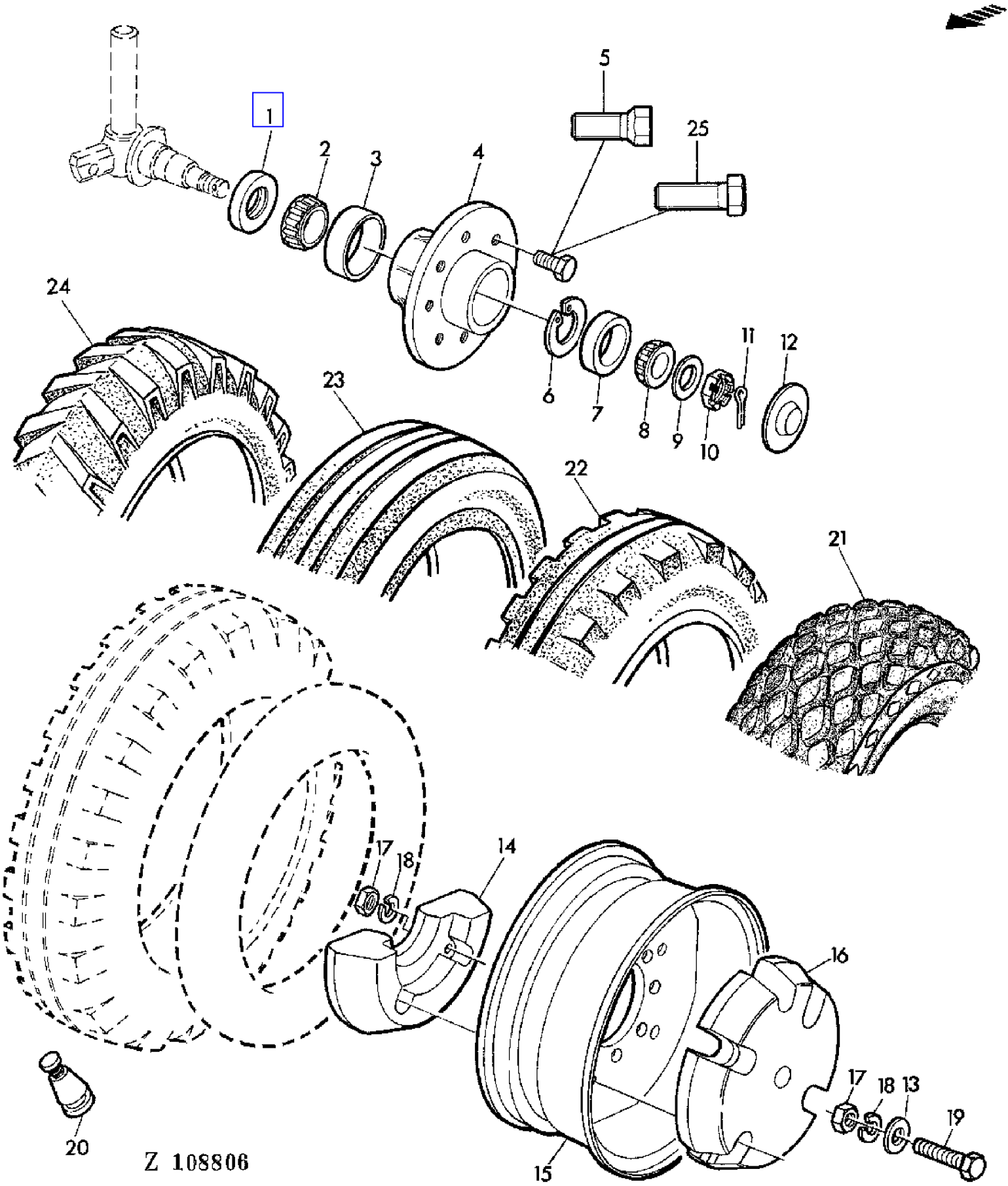

COPYRIGHT©1994 - 2008 DEERE & COMPANY Moline, Illinois All rights reserved

(2A15) REAR WHEELS WITH HUB
ROUES ARRIERE ET MOYEU
HINTERRAEDER MIT NABEN
RUOTE POSTERIORI E MOZZO
RUEDAS TRASERAS CON CUBOS
BAKHJUL MED NAV

KEY	PART NO.	PART NAME	QTY	SERIAL NO.		975	975HY/4	REMARKS
1	AZ12020	SEAL	2			X	X	
2	JD8174	BEARING CONE	2			X	X	
3	JD8219	BEARING CUP	2			X	X	
4	Z10852	HUB	2			X	X	
5	H20336	WHEEL BOLT	16		- XXXX	X	X	
6	Z21641	SNAP RING	2			X	X	
7	JD7449	BEARING CUP	2			X	X	
8	JD8150	BEARING CONE	2			X	X	
9	Z21950	WASHER	2			X	X	
10	14M7180	NUT	2			X	X	M22
11	11M7024	COTTER PIN	2			X	X	4 X 40 MM
12	BP13226	CAP	2			X	X	
13	24M7049	WASHER	AR			X	X	18 MM
14	Z10861	WEIGHT	AR			X	X	
15	AZ17385	RIM	2		- XXXX	X	X	(A) (B) 9 X 18 (ORD AZ31527 W/ (8) 19H3546)
	AZ17384	RIM	2		- XXXX	X	X	(A) (B) 9 X 24 (ORD AZ32667 W/ (8) 19H3546)
	AZ31527	RIM	2	XXXX	-	X	X	(A) (B) 9 X 18
	AZ32667	RIM	2	XXXX	-	X	X	(A) (B) 9 X 24
16	Z10862	WEIGHT	AR		- XXXX	X	X	(ORD Z11426)
	Z11426	WEIGHT	AR	XXXX	-	X	X	
17	14M7142	NUT	AR			X	X	M16
18	12M7017	LOCK WASHER	AR			X	X	
19	19M7495	CAP SCREW	AR			X	X	M16 X 100 (W/ Z10862)
	19M7596	CAP SCREW	AR			X	X	M16 X 160 (W/ Z10861, Z10862)
20	AZ16587	TIRE VALVE STEM	2			X	X	
21	.....	TIRE	2				X	13.0/65 - 18 12PR
22	.....	TIRE	2				X	12,5 - 18 6PR
23	.....	TIRE	2				X	12.5/80 - 18 6PR
	.....	TIRE	2			X		(A) 12,5 - 18 8PR
	.....	TIRE	2			X		(B) 10,5 - 18 6PR
24	.....	TIRE	2			X		(B) 11,2 - 24 8PR
	.....	TIRE	2				X	11,2 - 24 8PR
25	19H3546	CAP SCREW	16	XXXX	-	X	X	5/8" X 1-3/8"

(A) STANDARD REAR AXLE
ESSIEU ARRIERE STANDARD
STANDARD-HINTERACHSE
ASSALE POSTERIORE STANDARD
EJE TRASERO STANDARD
STANDARD BAKAXEL

(B) WIDE REAR AXLE
ESSIEU ARRIERE LARGE
BREITE HINTERACHSE
ASSALE POSTERIORE LARGO
EJE TRASERO LARGO
BRED BAKAXEL

COPYRIGHT©1994 - 2008 DEERE & COMPANY Moline, Illinois All rights reserved

(3D13) REAR WINDOW
FENETRE ARRIERE
RUECKFENSTER
FINESTRA POSTERIORE
VENTANA TRASERA
BAKRE FONSTER

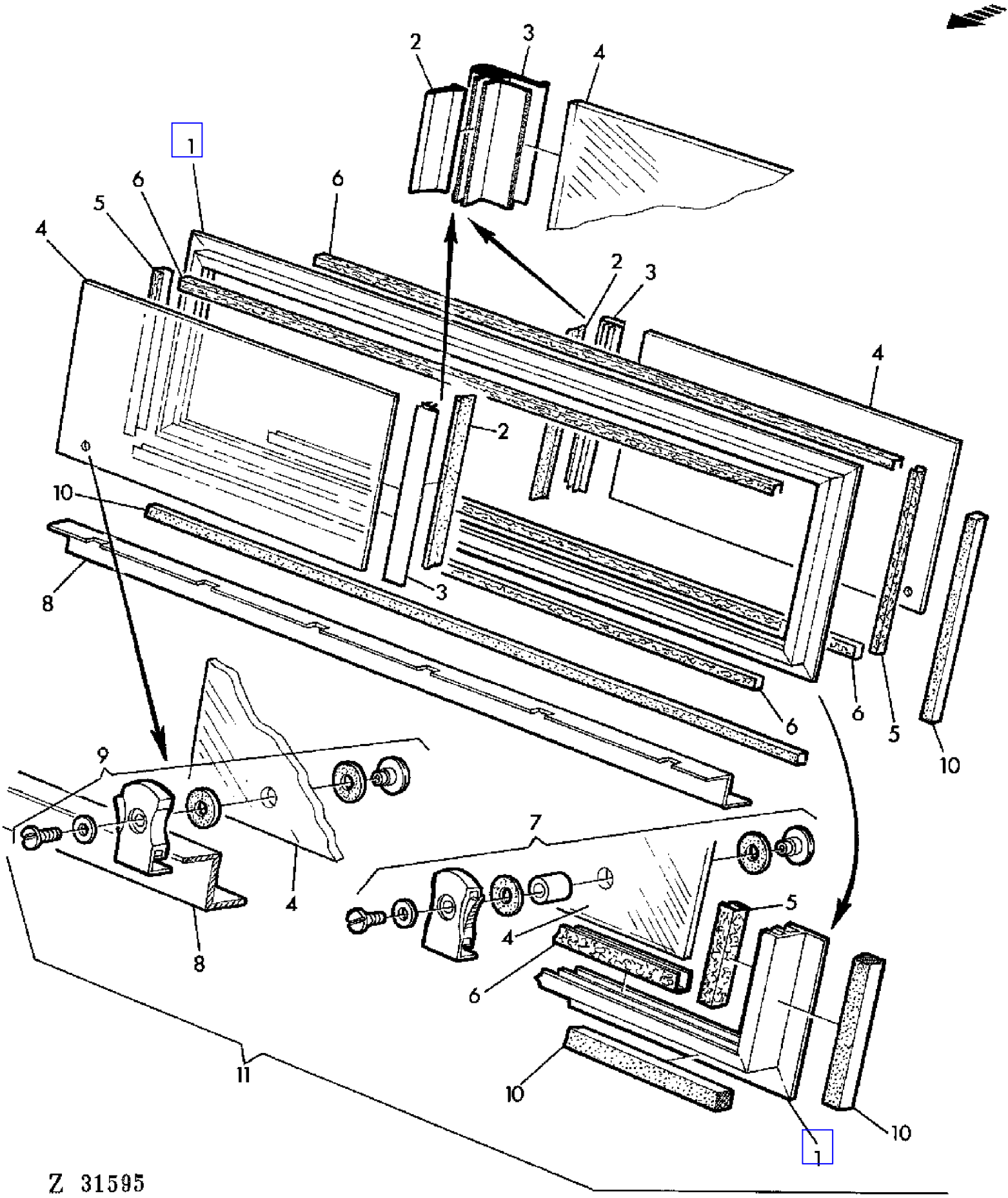

COPYRIGHT©1994 - 2008 DEERE & COMPANY Moline, Illinois All rights reserved

(3D13) REAR WINDOW
FENETRE ARRIERE
RUECKFENSTER
FINESTRA POSTERIORE
VENTANA TRASERA
BAKRE FONSTER

KEY	PART NO.	PART NAME	QTY	CAB SERIAL NO.	9 7 5 9 H 7 Y 5 4	REMARKS
1	DA23784	FRAME	1		X X	
2	CA23789	FLAP	2		X X	
3	CA23790	FELT	2		X X	
4	CA23785	WINDOWPANE	2		X X	
	CA23834	WINDOWPANE	2		X X	(A)
5	CA23791	FELT	2		X X	
6	CA23792	FELT	4		X X	
7	DA23786	KNOB	1		X X	LH
8	CA23788	STRAP	1		X X	
9	DA23787	KNOB	AR		X X	RH
10	CA23793	GASKET	1		X X	
11	DA23816	WINDOW	1		X X	(A) ASSY
	DA22653	WINDOW	1	K1317Z -	X X	ASSY

(A) TINTED GLASS
VERRE TEINTE
GETOENTES GLAS
CRISTALLO TINTEGGIATO
CRISTAL TINTURADO
FARGAD RUTOR

COPYRIGHT©1994 - 2008 DEERE & COMPANY Moline, Illinois All rights reserved

(3D11) REAR WINDOW-AIR CONDITIONED CAB
FENETRE ARRIERE,CABINE CLIMATISEE
RUECKFENSTER-KABINE MIT KLIMAANLAGE
FINESTRA POSTERIORE-CABINA CONDIZIONATA
VENTANA TRASERA,CABINA CON AIRE ACONDICIONADO
BAKFONSTER-HYTT MED LUFTKONDITIONERING

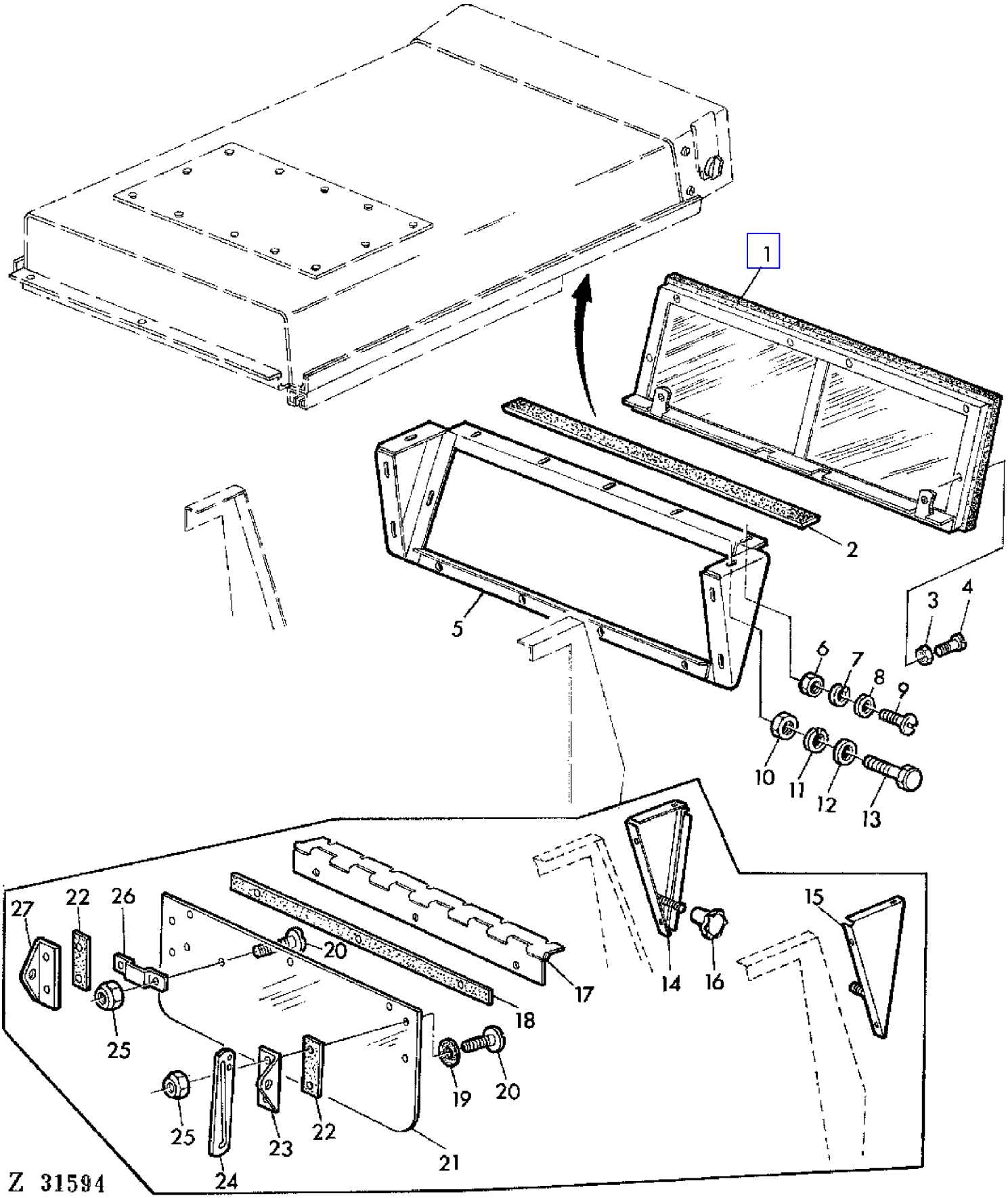

COPYRIGHT©1994 - 2008 DEERE & COMPANY Moline, Illinois All rights reserved

(3D11) REAR WINDOW-AIR CONDITIONED CAB
FENETRE ARRIERE,CABINE CLIMATISEE
RUECKFENSTER-KABINE MIT KLIMAANLAGE
FINESTRA POSTERIORE-CABINA CONDIZIONATA
VENTANA TRASERA,CABINA CON AIRE ACONDICIONADO
BAKFONSTER-HYTT MED LUFTKONDITIONERING

KEY	PART NO.	PART NAME	QTY	CAB SERIAL NO.			975	975HY/4	REMARKS
1	DA23816	WINDOW	1				X	X	(A) , ASSY
	DA22653	WINDOW	1	K1317Z	-		X	X	ASSY
2	CA20531	WEATHERSTRIP	1	K1317Z	-		X	X	20 X 4 MM X 3000 MM
3	14M7264	LOCK NUT	AR	K1317Z	-		X	X	M4
4	21M7033	SCREW	10	K1317Z	-		X	X	M4 X 16
5	DA22482	FRAME	1	K1317Z	-		X	X	
6	14M7027	NUT	AR	K1317Z	-		X	X	M6
7	12M7012	LOCK WASHER	AR	K1317Z	-		X	X	6 MM
8	24M7088	WASHER	AR	K1317Z	-		X	X	6,6 MM
9	21M7031	SCREW	AR	K1317Z	-		X	X	M6 X 15
10	14M7029	NUT	AR	K1317Z	-		X	X	M8
11	12M7008	LOCK WASHER	AR	K1317Z	-		X	X	8 MM
12	24M7036	WASHER	AR	K1317Z	-		X	X	9 MM
13	19M7139	CAP SCREW	AR	K1317Z	-		X	X	M8 X 20
14	DA20243	HOLDER	1		-	K1316Z	X		RH
15	DA20242	HOLDER	1		-	K1316Z	X		LH
16	DA20323	GRIP	2		-	K1316Z	X		
17	DA20218	HINGE	1		-	K1316Z	X		
18	CA19648	WEATHERSTRIP	1		-	K1316Z	X		
19	CA19649	WASHER	9		-	K1316Z	X		
20	CA19605	BOLT	9		-	K1316Z	X		
21	CA20314	WINDOW	1		-	K1316Z	X		
22	CA19647	WEATHERSTRIP	2		-	K1316Z	X		
23	CA20220	HOLDER	1		-	K1316Z	X		LH
24	CA20321	LEVER	2		-	K1316Z	X		
25	14M7165	LOCK NUT	2		-	K1316Z	X		M6
26	DA19603	GRIP	1		-	K1316Z	X		
27	CA20221	HOLDER	1		-	K1316Z	X		RH

(A) TINTED GLASS
VERRE TEINTE
GETOENTES GLAS
CRISTALLO TINTEGGIATO
CRISTAL TINTURADO
FARGAD RUTOR

COPYRIGHT©1994 - 2008 DEERE & COMPANY Moline, Illinois All rights reserved

(3C10) REAR WINDOW-STANDARD CAB
FENETRE ARRIERE-CABINE STANDARD
RUECKFENSTER-STANDARD KABINE
FINESTRA POSTERIORE-CABINA STANDARD
VENTANA TRASERA-CABINA STANDARD
BAKRE FONSTER-STANDARD FORARHYTT

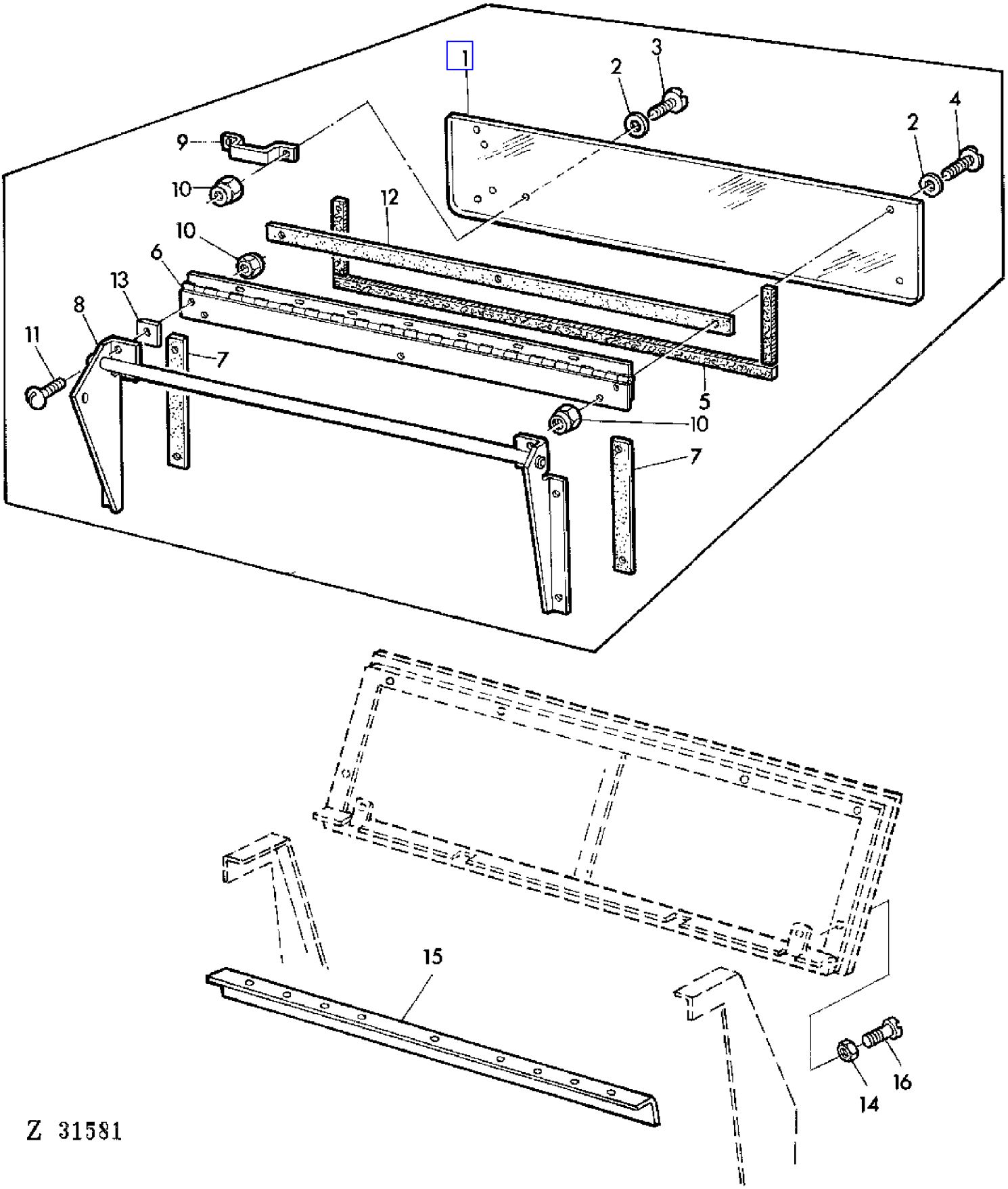

COPYRIGHT©1994 - 2008 DEERE & COMPANY Moline, Illinois All rights reserved

(3C10) REAR WINDOW-STANDARD CAB
FENETRE ARRIERE-CABINE STANDARD
RUECKFENSTER-STANDARD KABINE
FINESTRA POSTERIORE-CABINA STANDARD
VENTANA TRASERA-CABINA STANDARD
BAKRE FONSTER-STANDARD FORARHYTT

KEY	PART NO.	PART NAME	QTY	CAB SERIAL NO.	975	975HY/4	REMARKS
1	CA20314	WINDOW	1		X	X	
2	CA19649	WASHER	10		X	X	
3	CA19605	BOLT	7		X	X	
4	CA19604	BOLT	3		X	X	
5	CA19989	WEATHERSTRIP	1		X	X	LGTH = 1850 MM
6	DA19390	HINGE	1		X	X	
7	CA19647	WEATHERSTRIP	2		X	X	
8	DA19817	HOLDER	1		X	X	
9	DA19603	GRIP	1		X	X	
10	14M7165	LOCK NUT	12		X	X	M6
11	21M7031	SCREW	2		X	X	M6 X 15
12	CA19648	WEATHERSTRIP	1		X	X	
13	CA19874	PLATE	1		X	X	
14	14M7264	LOCK NUT	10		X	X	M4
15	CA22425	HOLDER	1	K1317Z -	X	X	
16	21M7033	SCREW	10		X	X	M4 X 16

COPYRIGHT©1994 - 2008 DEERE & COMPANY Moline, Illinois All rights reserved

(3A23) REAR-VIEW MIRROR
RETROVISEUR
RUECKSPIEGEL
SPECCHIETTO RETROVISIVO
RETROVISOR
BAKSPEGEL

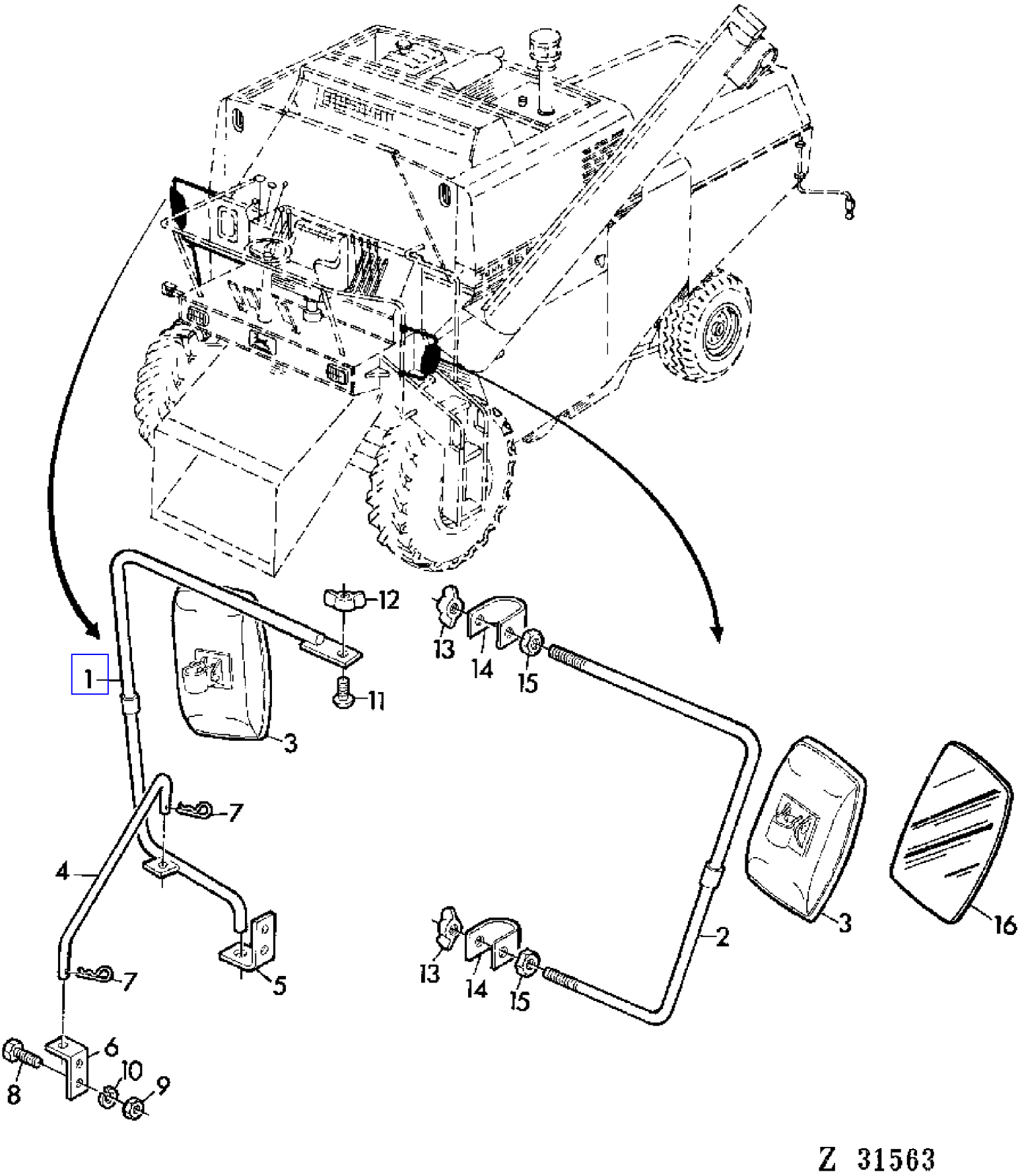

COPYRIGHT©1994 - 2008 DEERE & COMPANY Moline, Illinois All rights reserved

(3A23) REAR-VIEW MIRROR
RETROVISEUR
RUECKSPIEGEL
SPECCHIETTO RETROVISIVO
RETROVISOR
BAKSPEGEL

KEY	PART NO.	PART NAME	QTY	SERIAL NO.	975	975HY/4	REMARKS
1	AZ23915	HOLDER	1		X	X	RH
2	AZ23917	HOLDER	1		X	X	LH
3	AZ23981	REAR VIEW MIRROR	2		X	X	ASSY, INCL KEY 16
4	Z34908	BRACE	1		X	X	RH
5	Z34906	ANGLE	1		X	X	
6	Z34904	ANGLE	1		X	X	
7	L12622	SPRING LOCKING PIN	2		X	X	
8	19M7159	CAP SCREW	1		X	X	M6 X 16
9	14M7027	NUT	1		X	X	M6
10	12M7012	LOCK WASHER	1		X	X	6 MM
11	03M7093	BOLT	1		X	X	M8 X 25
12	Z20285	WING NUT	1		X	X	
13	14M7256	WING NUT	2		X	X	M12
14	Z27771	CLEVIS	2		X	X	LH
15	14M7031	NUT	2		X	X	M12
16	Z39369	REAR VIEW MIRROR	1		X	X	

COPYRIGHT©1994 - 2008 DEERE & COMPANY Moline, Illinois All rights reserved

(4D02) RETURN PAN WITH SIEVES AND CHAFFER
TABLE DE RETOUR D'OTONS,CADRE ET GRILLES
RUECKLAUFBODEN MIT SIEBRAHMEN UND SIEBE
TAVOLA DI RITORNO CON CASSONCINO E CRIVELLI
TRANSPORTADOR DE RETORNO CON CRIBAS Y ARMAZONES
RETURPLAN MED RAM OCH SALL

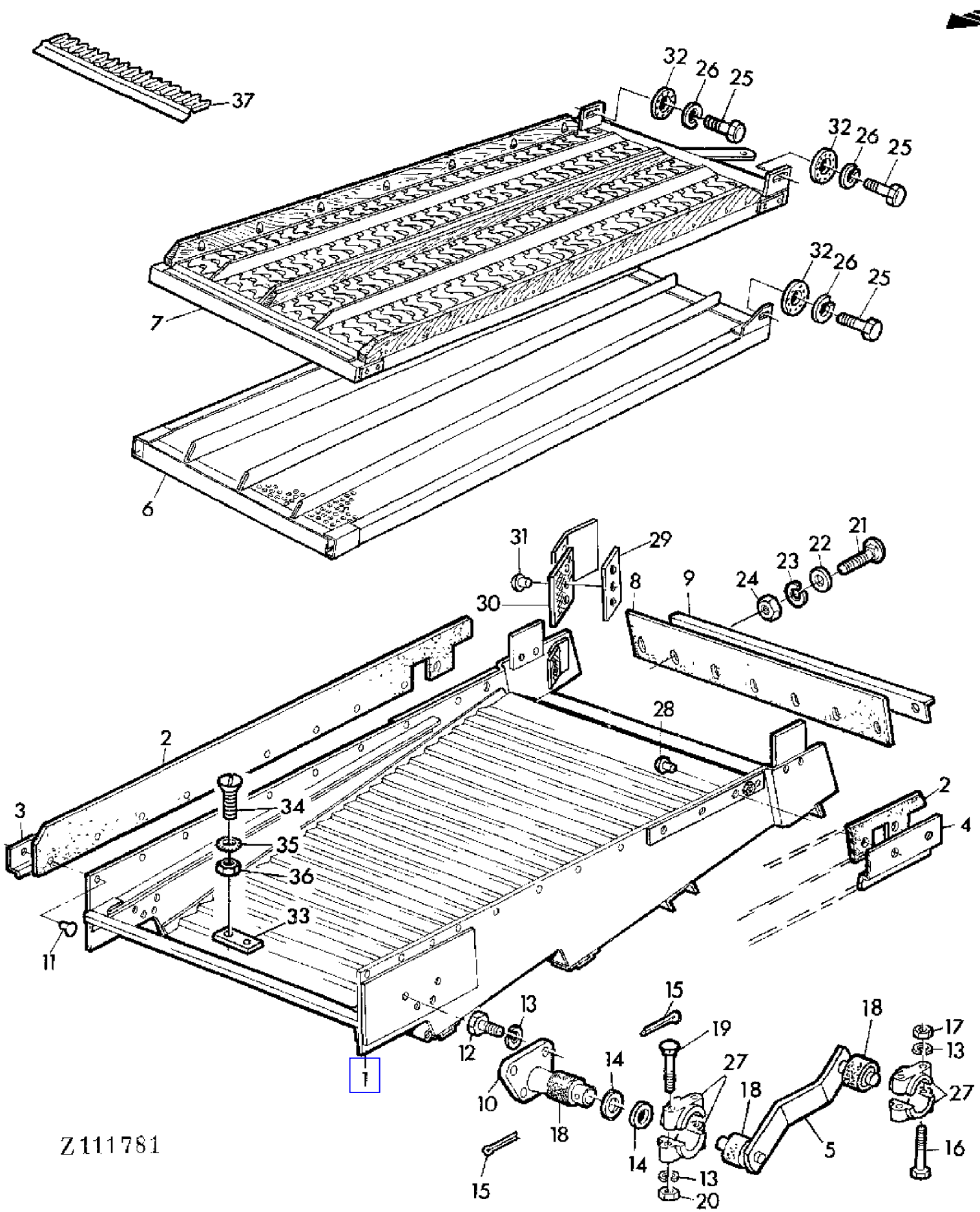

COPYRIGHT©1994 - 2008 DEERE & COMPANY Moline, Illinois All rights reserved

(4D02) RETURN PAN WITH SIEVES AND CHAFFER
TABLE DE RETOUR D'OTONS,CADRE ET GRILLES
RUECKLAUFBODEN MIT SIEBRAHMEN UND SIEBE
TAVOLA DI RITORNO CON CASSONCINO E CRIVELLI
TRANSPORTADOR DE RETORNO CON CRIBAS Y ARMAZONES
RETURPLAN MED RAM OCH SALL

KEY	PART NO.	PART NAME	QTY	SERIAL NO.	975	975HY/4	REMARKS
1	AZ29239	FRAME	1		X	X	INCL KEYS 2-4,11 (SUB FOR AZ22797, AZ27701)
2	Z35997	GASKET	2		X	X	(SUB FOR Z33926)
3	Z33925	REINFORCEMENT	1		X	X	RH (SUB FOR AZ22795)
4	Z33924	REINFORCEMENT	1		X	X	LH (SUB FOR AZ22796)
5	AZ27691	HANGER	2		X	X	ASSY, INCL KEYS 18 (SUB FOR AZ19245)
6	AZ23544	SIEVE	AR		X	X	4 MM
	AZ25422	SIEVE	1		X	X	8 MM
	AZ23542	SCREEN	AR		X	X	13,5 MM
	AZ23539	SIEVE	AR		X	X	15 MM
	AZ23536	SIEVE	AR		X	X	17 MM
7	AZ22799	CHAFFER	1		X	X	
8	Z36425	GASKET	1		X	X	(SUB FOR Z23051)
9	Z36421	REINFORCEMENT	1		X	X	(SUB FOR Z23052)
10	AZ19242	SHAFT	2		X	X	ASSY, INCL KEYS 18
11	16M2604	RIVET	AR		X	X	6 X 18 MM
12	19M7162	CAP SCREW	AR		X	X	M8 X 15
13	12M7008	LOCK WASHER	AR		X	X	8 MM
14	24M7049	WASHER	AR		X	X	18 MM
15	11M7020	COTTER PIN	AR		X	X	4 X 25 MM
16	19M7271	CAP SCREW	AR		X	X	M8 X 1 X 65
17	14M7147	NUT	AR		X	X	M8 X 1
18	P42100	BUSHING	AR		X	X	(SUB FOR AZ30964)
19	03M7074	BOLT	AR		X	X	M8 X 65
20	14M7029	NUT	AR		X	X	M8
21	21M7031	SCREW	AR		X	X	M6 X 15
22	24M7088	WASHER	AR		X	X	6,6 MM
23	12M7012	LOCK WASHER	AR		X	X	6 MM
24	14M7027	NUT	AR		X	X	M6
25	19M7167	CAP SCREW	AR		X	X	M10 X 25
26	12M7013	LOCK WASHER	AR		X	X	10 MM
27	PK1103H	BEARING	8		X	X	
28	16M2606	RIVET	AR		X	X	6 X 22 MM
29	Z36984	STRAP	2		X	X	
30	Z36523	GASKET	2		X	X	
31	16M7081	RIVET	6		X	X	4 X 6 MM
32	Z38269	WASHER	AR		X	X	
33	Z39723	GUIDE	2		X	X	
34	21M5525	SCREW	AR		X	X	M5 X 16
35	12M7062	LOCK WASHER	AR		X	X	6 MM
36	14M7028	NUT	AR		X	X	M5 |
37	Z44872	FINGER GRATE	AR		X	X	

COPYRIGHT©1994 - 2008 DEERE & COMPANY Moline, Illinois All rights reserved

(3E18) RETURN SHIELDS FOR FEEDER CONVEYOR
TOLES INTERMEDIAIRES POUR CONVOYEUR D'ALIMENTATION
ZWISCHENBODEN FUER SCHRAEGFOERDERER
FONDO INTERMEDIO PER COLLO ALIMENTATORE
FONDO INTERMEDIO PARA EL ELEVADOR DE MIES
RETURPLATAR FOR INMATNINGSELEVATOR

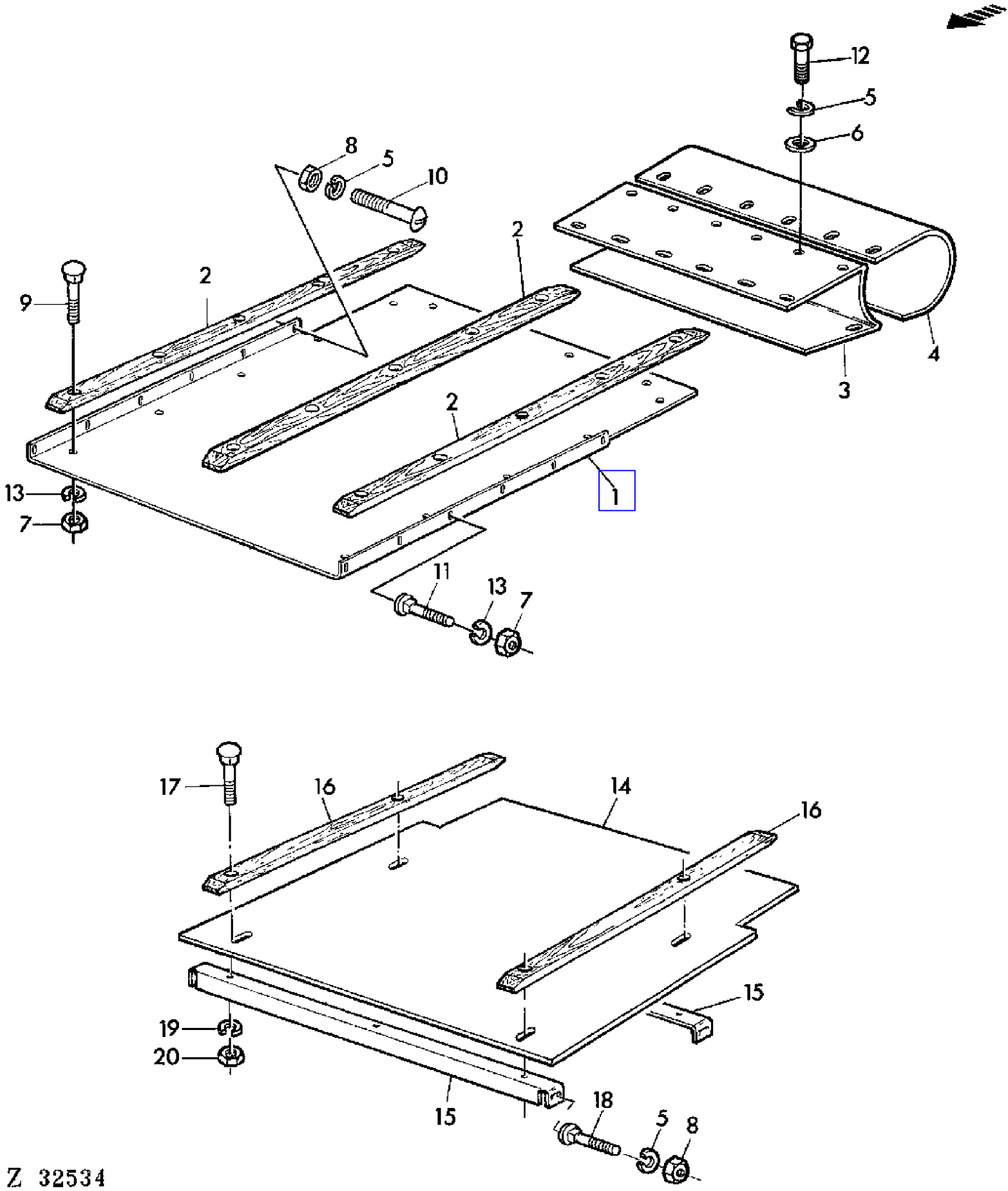

COPYRIGHT©1994 - 2008 DEERE & COMPANY Moline, Illinois All rights reserved

(3E18) RETURN SHIELDS FOR FEEDER CONVEYOR
TOLES INTERMEDIAIRES POUR CONVOYEUR D'ALIMENTATION
ZWISCHENBODEN FUER SCHRAEGFOERDERER
FONDO INTERMEDIO PER COLLO ALIMENTATORE
FONDO INTERMEDIO PARA EL ELEVADOR DE MIES
RETURPLATAR FOR INMATNINGSELEVATOR

KEY	PART NO.	PART NAME	QTY	SERIAL NO.			975	975HY/4	REMARKS
1	AZ19469	SHEET	1		-	013567	X		(A)
	AZ25939	SHEET	1	013568	-		X	X	(A)
2	Z25661	SLAT	3		-	013567	X		(A)
	Z37428	SLAT	3	013568	-		X	X	(A)
3	AZ19476	SHIELD	2		-	010731	X		(A)
	AZ24768	GUARD	2	010732	-	025572	X	X	(A)
	AZ19476	SHIELD	2	025573	-	XXXX	X	X	(A)
4	Z30874	DEFLECTOR	2		-	010731	X		(A)
	Z35773	GUARD	2	010732	-	025572	X	X	(A)
	Z30874	DEFLECTOR	2	025573	-	XXXX	X	X	(A)
5	12M7008	LOCK WASHER	AR				X	X	8 MM
6	24M7036	WASHER	AR				X	X	9 MM
7	14M7027	NUT	AR				X	X	M6
8	14M7029	NUT	AR				X	X	M8
9	03M7068	BOLT	AR				X	X	M6 X 20
10	21M7161	SCREW	AR				X	X	M8 X 30
11	21M7031	SCREW	AR				X	X	M6 X 15
12	19M7162	CAP SCREW	AR				X	X	M8 X 15
13	12M7012	LOCK WASHER	AR				X	X	6 MM
14	Z33015	SHEET	1				X	X	
15	Z30248	REINFORCEMENT	2				X	X	
16	Z30245	SLAT	3				X	X	
17	03M7098	BOLT	6				X	X	M10 X 35
18	03M7054	BOLT	6				X	X	M8 X 20
19	12M7013	LOCK WASHER	AR				X	X	10 MM
20	14M7140	NUT	AR				X	X	M10

(A) FOR FEEDER CONVEYOR LONG
POUR CONVOYEUR D'ALIMENTATION LONG
FUER LANGEN SCHRAEGFOERDERER
PER COLLO ALIMENTATORE LUNGO
PARA ELEVADOR DE MIES LARGO
FOR LANG INMATNINGSELEVATOR

COPYRIGHT©1994 - 2008 DEERE & COMPANY Moline, Illinois All rights reserved

(1I09) REVERMATIC "SHIFT" UNIT
EMBRAYAGE REVERMATIC
SCHALTEINHEIT
GRUPPO REVERMATIC
INVERSOR DE MARCHA
REVERMATIC KOPPLING

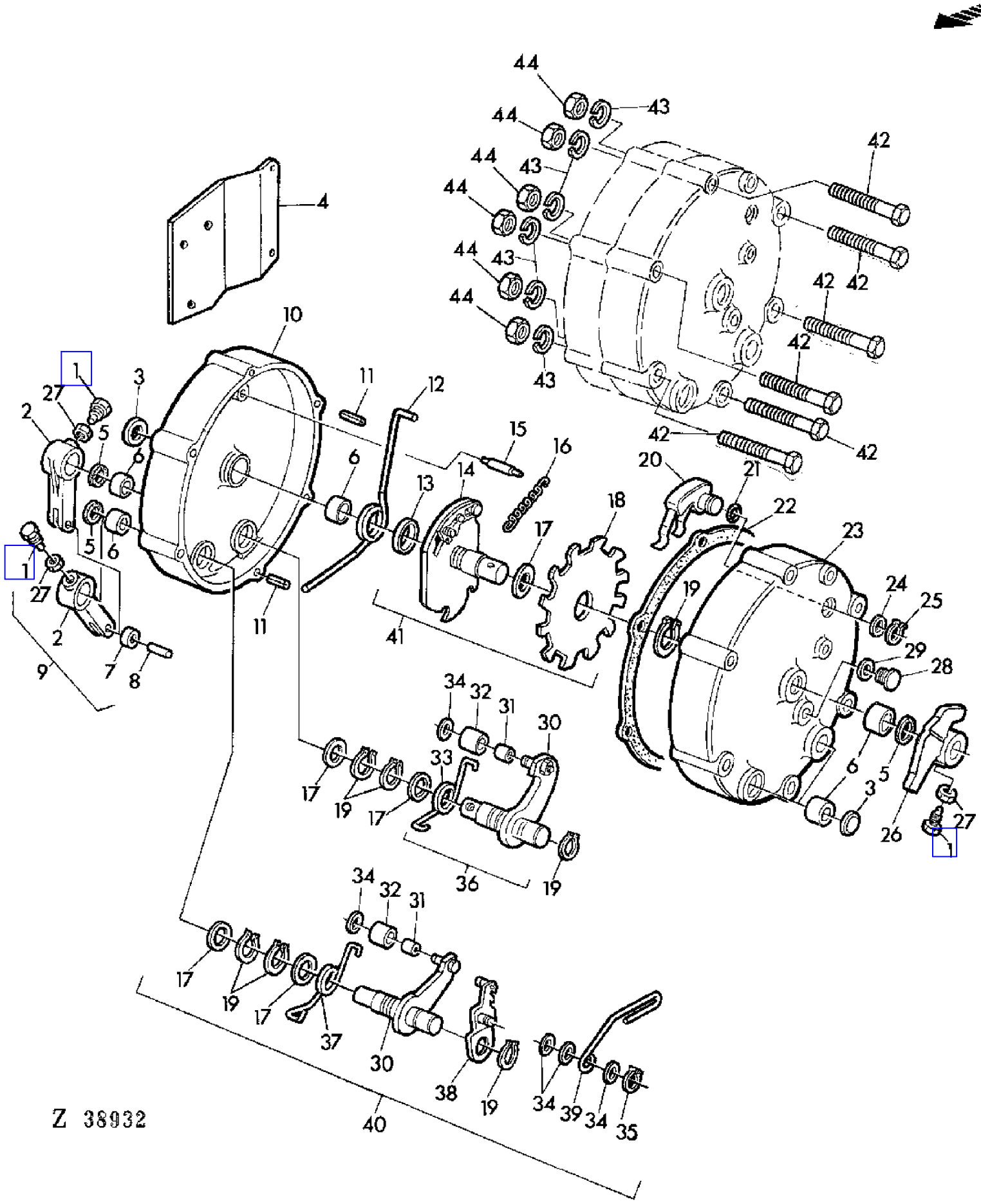

COPYRIGHT©1994 - 2008 DEERE & COMPANY Moline, Illinois All rights reserved

(1I09) REVERMATIC "SHIFT" UNIT
EMBRAYAGE REVERMATIC
SCHALTEINHEIT
GRUPPO REVERMATIC
INVERSOR DE MARCHA
REVERMATIC KOPPLING

KEY	PART NO.	PART NAME	QTY	SERIAL NO.	REMARKS
1	Z35024	SET SCREW	2		
2	.....	LEVER	2		NSEP (ORD AZ24037)
3	30M6526	PLUG	3		
4	Z35027	PLATE	1		
5	Z35117	GASKET	3		
6	Z35076	BUSHING	6		
7	AZ24036	ROLLER BEARING	2		
8	44M7030	DOWEL PIN	2		8 X 25 MM
9	AZ24037	LEVER	2		ASSY, INCL KEYS 1,2,7,8,27
10	.....	CASE	1		(ORD AZ24113)
11	Z35067	DOWEL PIN	2		
12	Z35077	SPRING	1		
13	Z35072	WASHER	1		
14	.....	DRIVER	1		NSEP (ORD AZ30799)
15	Z35073	DOWEL PIN	1		
16	Z35055	EXTENSION SPRING	1		
17	Z35061	SHIM	5		
18	.....	QUADRANT	1		NSEP (ORD AZ30799)
19	40M1831	SNAP RING	7		
20	AZ27441	CONTACT	1		(INCL Z38272) (SUB FOR AZ24121)
21	Z38272	O-RING	1		
22	Z35078	GASKET	1		
23	.....	CASE	1		(ORD AZ24113)
24	Z35066	WASHER	1		
25	40M1825	SNAP RING	1		
26	Z10982	LEVER	1		
27	14M7156	NUT	3		M14
28	Z35116	PLUG	1		
29	Z35115	O-RING	1		
30	.....	LEVER	2		NSEP (ORD AZ24118)
31	.....	BUSHING	2		NSEP (ORD AZ24118)
32	.....	BUSHING	2		NSEP (ORD AZ24118)
33	.....	SPRING	1		NSEP (ORD AZ24118 OR AZ24122)
34	.....	WASHER	5		NSEP (ORD AZ24118)
35	40M1818	SNAP RING	1		
36	AZ24118	DETENT	1		ASSY, INCL KEYS (3) 19,30-35
37	.....	SPRING	1		NSEP (ORD AZ24120 OR AZ24122)
38	AZ24624	DETENT	1		
39	.....	WASHER	1		NSEP (ORD AZ24120 OR AZ24122)
40	AZ24120	DETENT	1		ASSY, INCL KEYS (3) 19, (3) 17, 30-32, (4) 34, (2) 35,37-39
41	AZ30799	SHAFT	1		ASSY, INCL KEYS 13,14,17-19 (SUB FOR AZ24116)
42	19M7398	CAP SCREW	6		M8 X 90
43	12M7016	LOCK WASHER	6		8 MM
44	14M7029	NUT	6		M8
..	AZ24113	KIT	1		ASSY, INCL KEYS 10, (2) 11,15,22, 23, (3) 41, (3) 43, (3) 44

COPYRIGHT©1994 - 2008 DEERE & COMPANY Moline, Illinois All rights reserved

(1I09) REVERMATIC "SHIFT" UNIT
EMBRAYAGE REVERMATIC
SCHALTEINHEIT
GRUPPO REVERMATIC
INVERSOR DE MARCHA
REVERMATIC KOPPLING

KEY	PART NO.	PART NAME	QTY	SERIAL NO.	REMARKS
..	AZ24122	KIT	1		KIT, INCL KEYS 12,16,33,37,39

COPYRIGHT©1994 - 2008 DEERE & COMPANY Moline, Illinois All rights reserved

(1F22) REVERSER CLUTCH-CONTROL LIGHTS
TEMOINS DU REVERMATIC
REVERMATIC-KONTROLLAMPEN
LUCI SPIE DEL INVERSORE "REVERMATIC"
LUCES TESTIGO DEL SISTEMA "REVERMATIC"
KONTROLLAMPOR FOR FRAM-OCH BACKKOPPLING

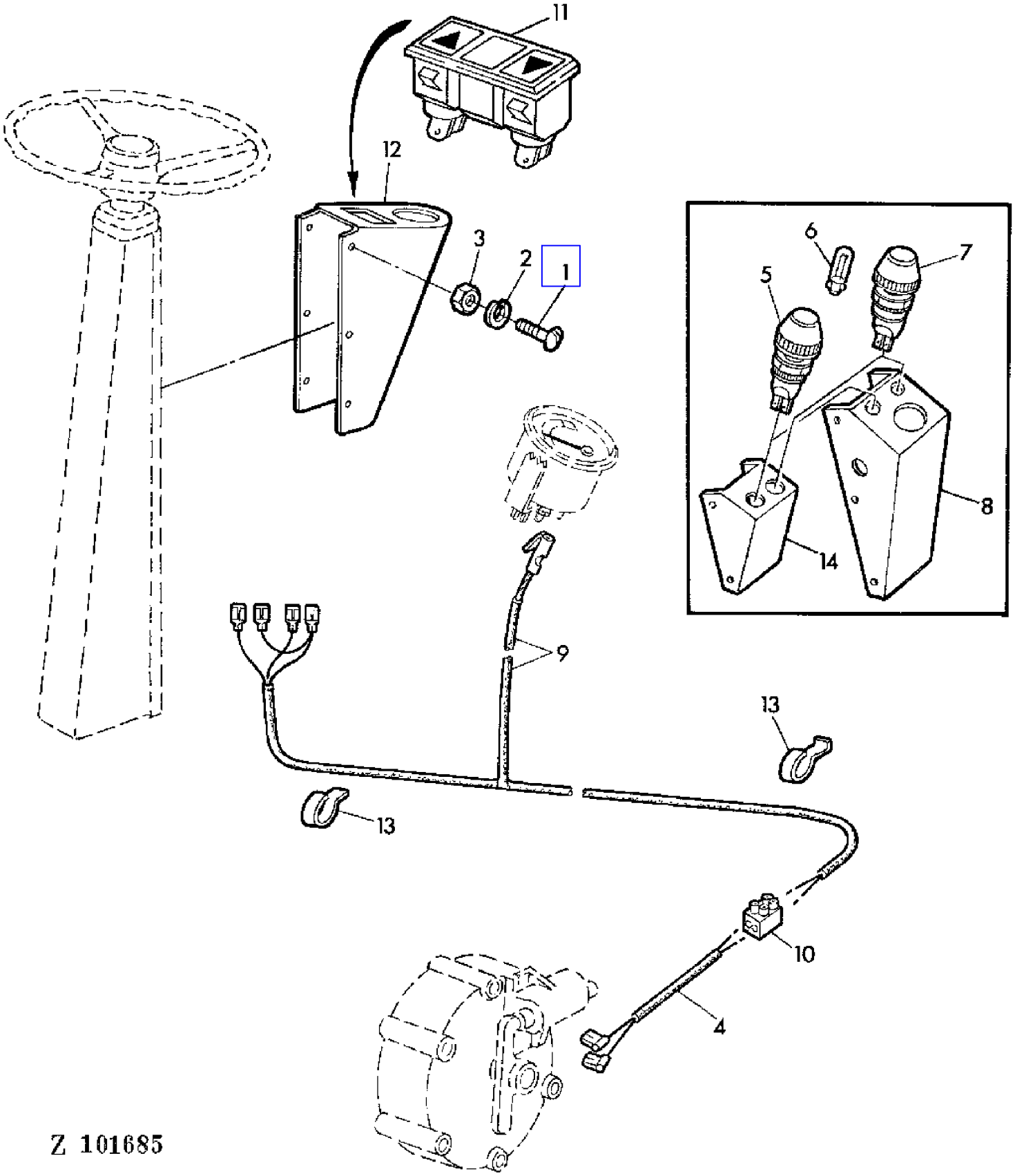

COPYRIGHT©1994 - 2008 DEERE & COMPANY Moline, Illinois All rights reserved

(1F22) REVERSER CLUTCH-CONTROL LIGHTS
TEMOINS DU REVERMATIC
REVERMATIC-KONTROLLAMPEN
LUCI SPIE DEL INVERSORE "REVERMATIC"
LUCES TESTIGO DEL SISTEMA "REVERMATIC"
KONTROLLAMPOR FOR FRAM-OCH BACKKOPPLING

KEY	PART NO.	PART NAME	QTY	SERIAL NO.		975	975HY/4	REMARKS
1	21M7141	SCREW	4			X		M5 X 20
2	12M7011	LOCK WASHER	4			X		5 MM
3	14M7028	NUT	4			X		M5
4	AZ24101	WIRING HARNESS	1			X		
5	AZ19064	INDICATOR LIGHT	1		- XXXX	X		
6	57M6394	BULB	2			X		HL 12V 4W
7	AZ19063	INDICATOR LIGHT	1		- XXXX	X		
8	Z35548	HOUSING	1		- XXXX	X		(ORD Z41947 W/ AZ31556)
9	AZ23422	WIRING HARNESS	1			X		
10	AZ15003	CONNECTOR	1			X		
11	AZ31556	INDICATOR LIGHT	1	XXXX	-	X		
12	Z41947	CASE	1	XXXX	-	X		(SUB FOR Z35548)
13	Z24278	CLAMP	AR			X		

COPYRIGHT©1994 - 2008 DEERE & COMPANY Moline, Illinois All rights reserved

(3D09) ROOF-AIR CONDITIONED CAB
TOIT-CABINE CLIMATISEE
DACH-KABINE MIT KLIMAANLAGE
TETTO-CABINA CONDIZIONATA
TECHO-CABINA CON AIRE ACONDICIONADO
TAK-HYTT MED LUFTKONDITIONERING

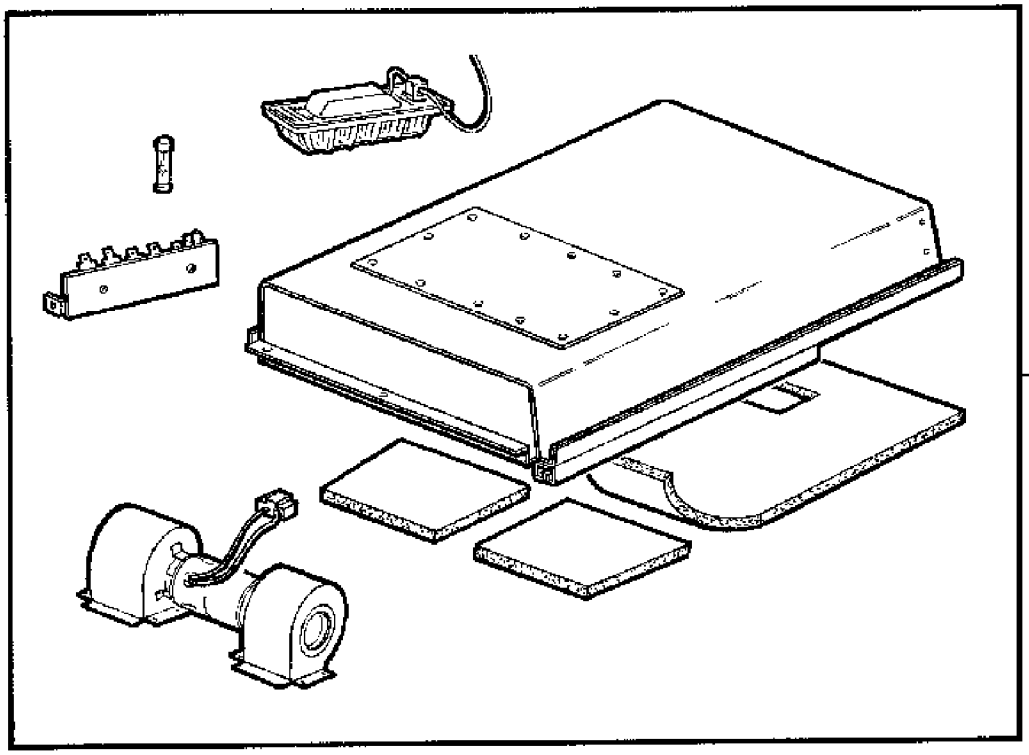

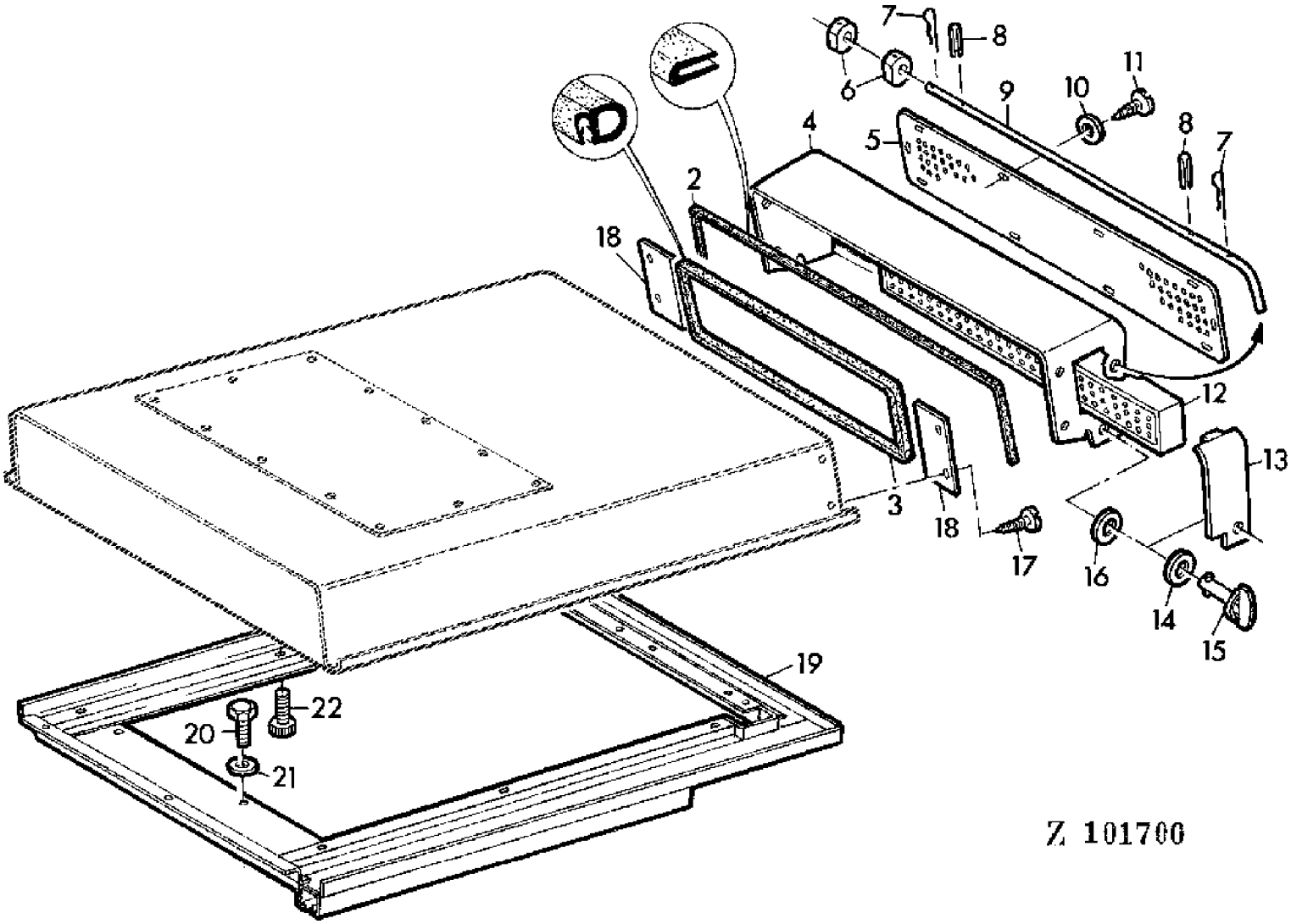

COPYRIGHT©1994 - 2008 DEERE & COMPANY Moline, Illinois All rights reserved

(3D09) ROOF-AIR CONDITIONED CAB
TOIT-CABINE CLIMATISEE
DACH-KABINE MIT KLIMAANLAGE
TETTO-CABINA CONDIZIONATA
TECHO-CABINA CON AIRE ACONDICIONADO
TAK-HYTT MED LUFTKONDITIONERING

KEY	PART NO.	PART NAME	QTY	SERIAL NO.	975	975HY/4	REMARKS
1	AH94022	ROOF	1		X	X	
2	CA20224	GASKET	1		X	X	
3	CA21487	GASKET	1		X	X	
4	DA20240	HOUSING	1		X	X	
5	CA20236	SCREEN	1		X	X	
6	CA20331	GUIDE	2		X	X	
7	11M7020	COTTER PIN	2		X	X	4 X 22 MM
8	34M7029	SPRING PIN	2		X	X	4 X 30 MM
9	CA20247	ROD	1		X	X	
10	24M7088	WASHER	10		X	X	6 MM
11	21M7199	SCREW	10		X	X	M5 X 10
12	AH80920	FILTER	1		X	X	
13	DA20237	COVER	1		X	X	
14	24H1254	WASHER	1		X	X	
15	AE31927	STUD	1		X	X	
16	E50846	LOCK WASHER	1		X	X	
17	H82734	SCREW	4		X	X	
18	CA20219	PLATE	2		X	X	
19	DA20203	CAB ROOF FRAME	1		X	X	
20	19M7167	CAP SCREW	4		X	X	M10 X 25
21	24M7040	WASHER	4		X	X	11 MM
22	E33233	SCREW	13		X	X	

COPYRIGHT©1994 - 2008 DEERE & COMPANY Moline, Illinois All rights reserved

(3C04) ROOF-STANDARD CAB
TOIT-CABINE STANDARD
DACH-STANDARD-KABINE
TETTO-CABINA STANDARD
TECHO-CABINA STANDARD
TAK-STANDARD FORARHYTT

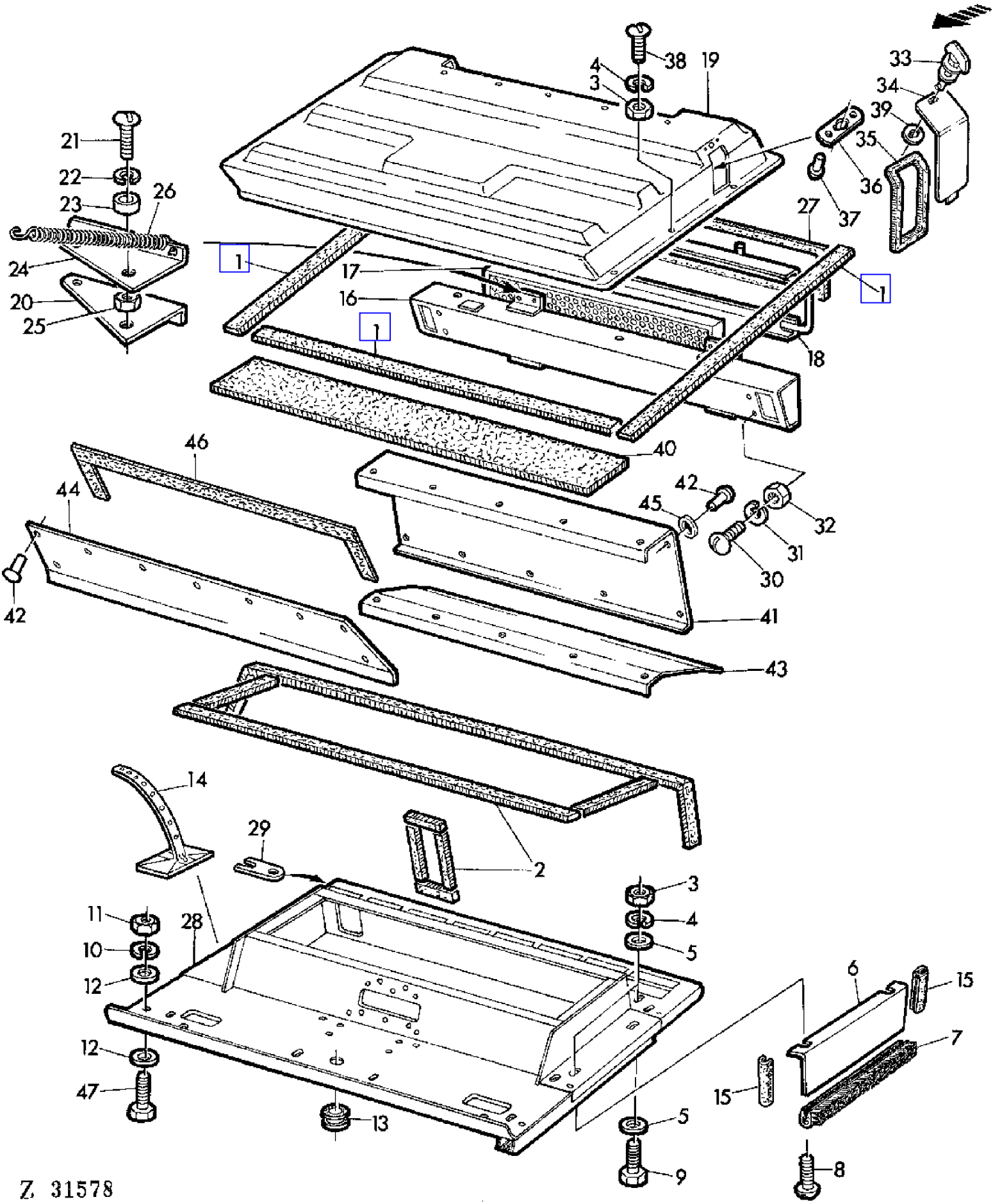

COPYRIGHT©1994 - 2008 DEERE & COMPANY Moline, Illinois All rights reserved

(3C04) ROOF-STANDARD CAB
TOIT-CABINE STANDARD
DACH-STANDARD-KABINE
TETTO-CABINA STANDARD
TECHO-CABINA STANDARD
TAK-STANDARD FORARHYTT

KEY	PART NO.	PART NAME	QTY	SERIAL NO.	975	975HY/4	REMARKS
1	CA19606	WEATHERSTRIP	1		X	X	LGTH = 5600 MM (30 X 6 MM)
2	CA19549	WEATHERSTRIP	1		X	X	LGTH = 6550 MM (12 X 6 MM)
3	14M7027	NUT	18		X	X	M6
4	12M7012	LOCK WASHER	18		X	X	6 MM
5	24M7088	WASHER	16		X	X	6,6 MM
6	CA19378	HOLDER	1		X	X	
7	CA19609	BRUSH	1		X	X	
8	21M7031	SCREW	2		X	X	M6 X 15
9	19M7077	CAP SCREW	7		X	X	M6 X 20
10	12M7013	LOCK WASHER	10		X	X	10 MM
11	14M7140	NUT	10		X	X	M10 |
12	24M7040	WASHER	20		X	X	11 MM
13	Z21238	GROMMET	3		X	X	
14	Z36647	CLAMP	AR		X	X	
15	CA19903	GASKET	2		X	X	LGTH = 230 MM
16	DA19532	HOUSING	1		X	X	
17	AH80920	FILTER	1		X	X	
18	DA19536	HOLDER	1		X	X	
19	CA19714	ROOF	1		X	X	
20	CA19669	SHEET	2		X	X	
21	21M7087	SCREW	4		X	X	M6 X 12
22	12M7012	LOCK WASHER	4		X	X	6 MM
23	CA19537	SPACER	4		X	X	
24	CA19539	SHEET	2		X	X	
25	14M7027	NUT	4		X	X	M6
26	R34000	SPRING	4		X	X	
27	CA19549	WEATHERSTRIP	1		X	X	LGTH = 6550 MM (12 X 6 MM)
28	DA19376	FRAME	1		X	X	
29	CA19990	REINFORCEMENT	1		X	X	LGTH = 50 MM
30	21M7081	SCREW	4		X	X	M8 X 15
31	12M7008	LOCK WASHER	4		X	X	8 MM
32	14M7029	NUT	4		X	X	M8
33	AE31927	STUD	1		X	X	
34	DA19655	COVER	1		X	X	
35	CA19549	WEATHERSTRIP	1		X	X	LGTH = 6550 MM (12 X 6 MM)
36	E50847	LOCK	1		X	X	
37	16H104	RIVET	2		X	X	1/8" X 7/16"
38	21M7085	SCREW	9		X	X	M6 X 20
39	E50846	LOCK WASHER	1		X	X	
40	CA19716	WEATHERSTRIP	1		X	X	
41	CA19400	SHEET	1		X	X	
42	CA19717	RIVET	19		X	X	

COPYRIGHT©1994 - 2008 DEERE & COMPANY Moline, Illinois All rights reserved

(3C04) ROOF-STANDARD CAB
TOIT-CABINE STANDARD
DACH-STANDARD-KABINE
TETTO-CABINA STANDARD
TECHO-CABINA STANDARD
TAK-STANDARD FORARHYTT

KEY	PART NO.	PART NAME	QTY	SERIAL NO.	975	975HY/4	REMARKS
43	CA19639	SHEET	1		X	X	
44	CA19401	SHEET	1		X	X	
45	CA21308	WASHER	7		X	X	
46	CA19420	WEATHERSTRIP	1		X	X	LGTH = 1850 MM (20 X 6MM)
47	19M7167	CAP SCREW	10		X	X	M10 X 25

COPYRIGHT©1994 - 2008 DEERE & COMPANY Moline, Illinois All rights reserved

(1B24) ROTARY RADIATOR SCREEN
TAMIS ROTATIF DE RADIATEUR
ROTIERENDES KUEHLERSIEB
SCHERMO ROTANTE DEL RADIATORE
PERSIANA ROTATIVA DE RADIADOR
ROTERANDE KYLARSKYDD

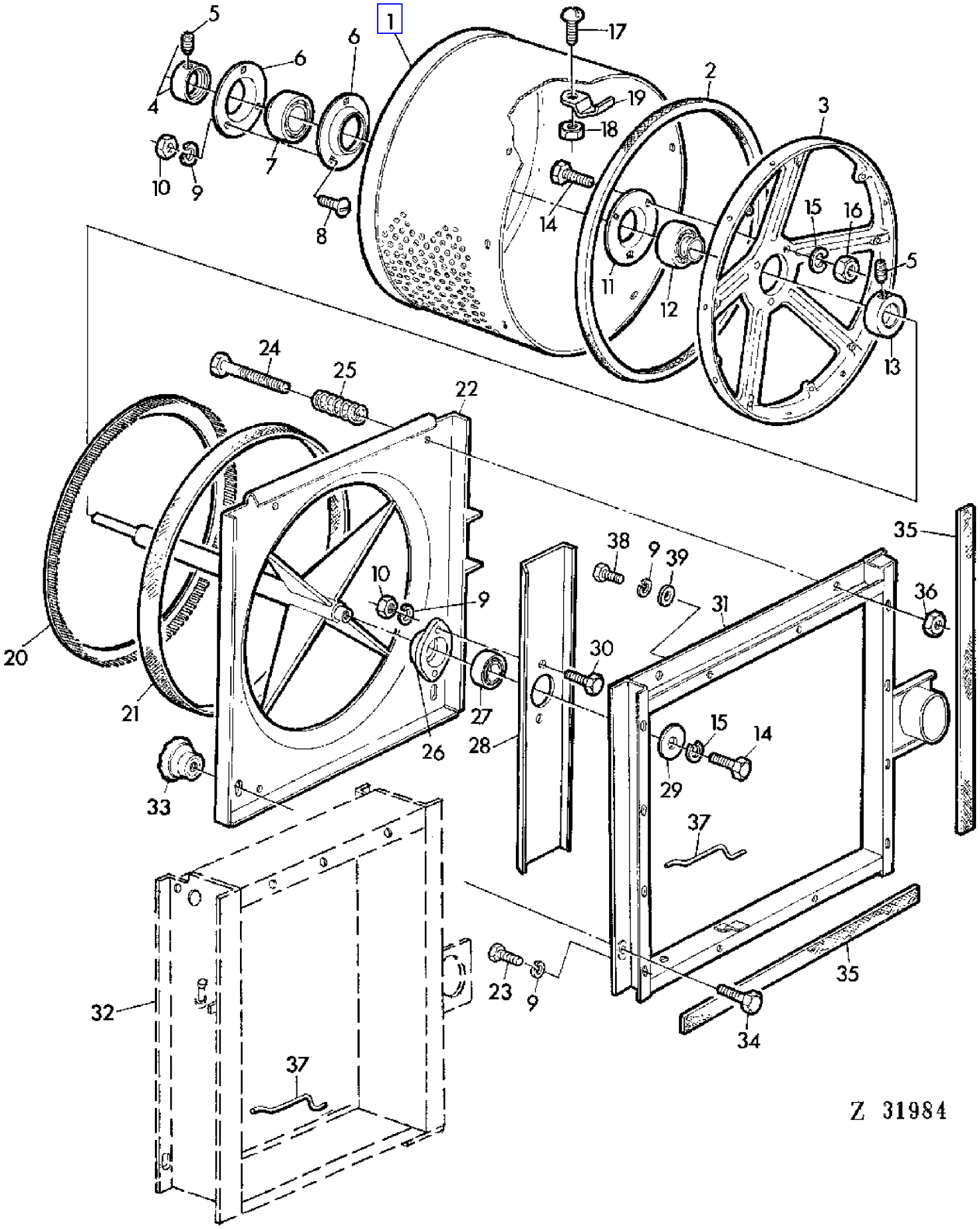

COPYRIGHT©1994 - 2008 DEERE & COMPANY Moline, Illinois All rights reserved

(1B24) ROTARY RADIATOR SCREEN
TAMIS ROTATIF DE RADIATEUR
ROTIERENDES KUEHLERSIEB
SCHERMO ROTANTE DEL RADIATORE
PERSIANA ROTATIVA DE RADIADOR
ROTERANDE KYLARSKYDD

KEY	PART NO.	PART NAME	QTY	SERIAL NO.	975	975HY/4	REMARKS
1	AZ19965	SCREEN	1		X	X	
2	Z32165	GASKET	1		X	X	
3	Z10872	SPIDER	1		X	X	
4	AZ20029	ECCENTRIC LOCKING COLLAR	1		X	X	INCL KEY 5
5	22M7079	SET SCREW	2		X	X	M6 X 6
6	Z31371	QUILL	2		X	X	
7	AZ19963	BALL BEARING	1		X	X	
8	03M7092	BOLT	3		X	X	M6 X 16
9	12M7012	LOCK WASHER	AR		X	X	6 MM
10	14M7027	NUT	5		X	X	M6
11	Z33117	QUILL	1		X	X	
12	JD39108	BALL BEARING	1		X	X	
13	AZ13117	ECCENTRIC LOCKING COLLAR	1		X	X	INCL KEY 5
14	19M7139	CAP SCREW	4		X	X	M8 X 20
15	12M7008	LOCK WASHER	4		X	X	8 MM
16	14M7029	NUT	3		X	X	M8
17	21M7031	SCREW	12		X	X	M6 X 15
18	14M7165	LOCK NUT	12		X	X	M6
19	Z35159	CLAMP	12		X	X	
20	AZ21454	BRUSH	1		X	X	
21	Z39668	GASKET	1		X	X	(SUB FOR Z33520, Z38510)
22	AZ22048	FRAME	1		X		
	AZ26143	FRAME	1			X	
23	19M7159	CAP SCREW	8		X	X	M6 X 15
24	19M7164	CAP SCREW	2		X	X	M8 X 50
25	Z33018	COMPRESSION SPRING	2		X	X	
26	Z33854	PRESSED FLANGED HOUSING	1		X		
27	JD29980	BALL BEARING	1		X		
28	Z39834	FAN BLADE	1		X		(SUB FOR Z33022)
29	24M7024	WASHER	1		X		9,5 MM
30	19M7286	CAP SCREW	2		X		M6 X 25
31	AZ24183	FRAME	1		X		
32	.....	FRAME	1			X	(ORD AZ27982)
33	AZ22047	GRIP	2		X		
34	19M7163	CAP SCREW	2		X		M8 X 25
35	Z32847	WEATHERSTRIP	8		X		
36	14M7166	LOCK NUT	2		X		M8
37	Z33073	SUPPORT	1		X	X	
38	19M6614	CAP SCREW	4		X	X	M6 X 12
39	Z26250	WASHER	4		X	X	

COPYRIGHT©1994 - 2008 DEERE & COMPANY Moline, Illinois All rights reserved

(3C14) RUBBER SEAL COMBINE-OPERATOR'S PLATFORM
JOINTS CADUTCHOUC,PLATE-FORME DE CONDUITE
ABDICHTUNG FAHRERPLATTFORM
GUARNIZIONI DI GOMMA.PIATTAFORMA OPERATORE
PARA LA PLATAFORMA DE CONDUCCION-PIEZAS DE AISLAMIENTO
GUMMITATNING (FORARPLATTFORM)

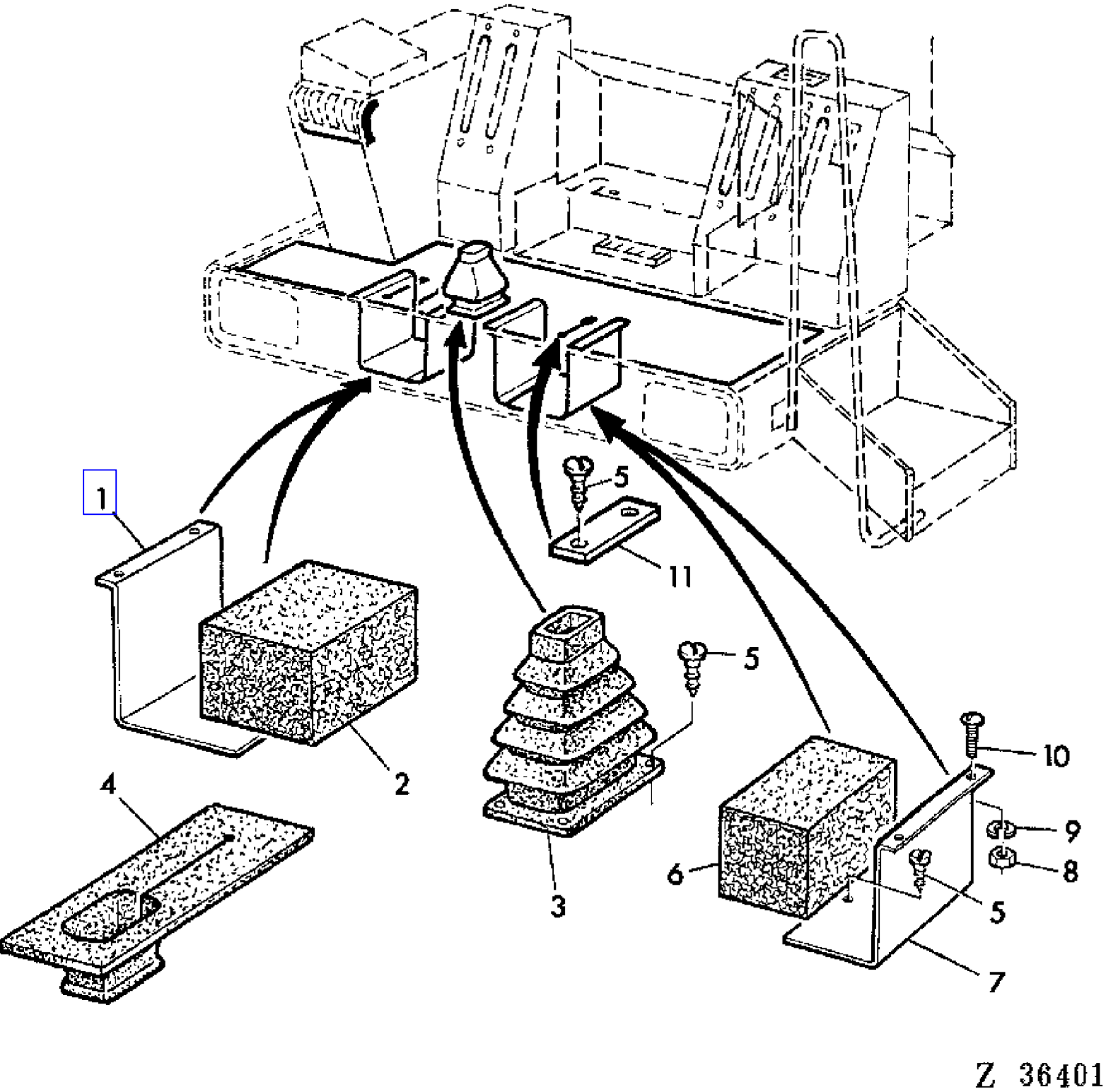

COPYRIGHT©1994 - 2008 DEERE & COMPANY Moline, Illinois All rights reserved

(3C14) RUBBER SEAL COMBINE-OPERATOR'S PLATFORM
JOINTS CADUTCHOUC,PLATE-FORME DE CONDUITE
ABDICHTUNG FAHRERPLATTFORM
GUARNIZIONI DI GOMMA.PIATTAFORMA OPERATORE
PARA LA PLATAFORMA DE CONDUCCION-PIEZAS DE AISLAMIENTO
GUMMITATNING (FORARPLATTFORM)

KEY	PART NO.	PART NAME	QTY	SERIAL NO.		975	975HY	REMARKS
1	CA19574	RETAINER	1		- 026722	X	X	
2	CA19568	FOAM PAD	1		- 026722	X	X	
3	Z41547	BOOT	1			X	X	(SUB FOR CA19634, Z39463)
4	Z39464	BOOT	3	026723	-	X	X	
5	37M7029	SCREW	AR			X	X	M5,5 X 13
6	CA19569	FOAM PAD	1		- 026722	X	X	
7	CA19575	RETAINER	1		- 026722	X	X	
8	14M7027	NUT	AR			X	X	M6
9	12M7012	LOCK WASHER	AR			X	X	6 MM
10	21M7031	SCREW	AR			X	X	M6 X 15
11	Z38061	STRAP	1				X	

COPYRIGHT©1994 - 2008 DEERE & COMPANY Moline, Illinois All rights reserved

(3C12) RUBBER SEAL,COMBINE-OPERATOR'S PLATFORM
JOINTS CAOUTCHOUC,PLATE-FORME DE CONDUITE
ABDICHTUNG FAHRERPLATTFORM
GUARNIZIONI DI GOMMA DELLA PIATTAFORMA DELL'OPERATORE
PARA LA PLATAFORMA DE CONDUCCION-PIEZAS DE AISLAMIENTO
GUMMITATNING (FORARPLATTFORM)

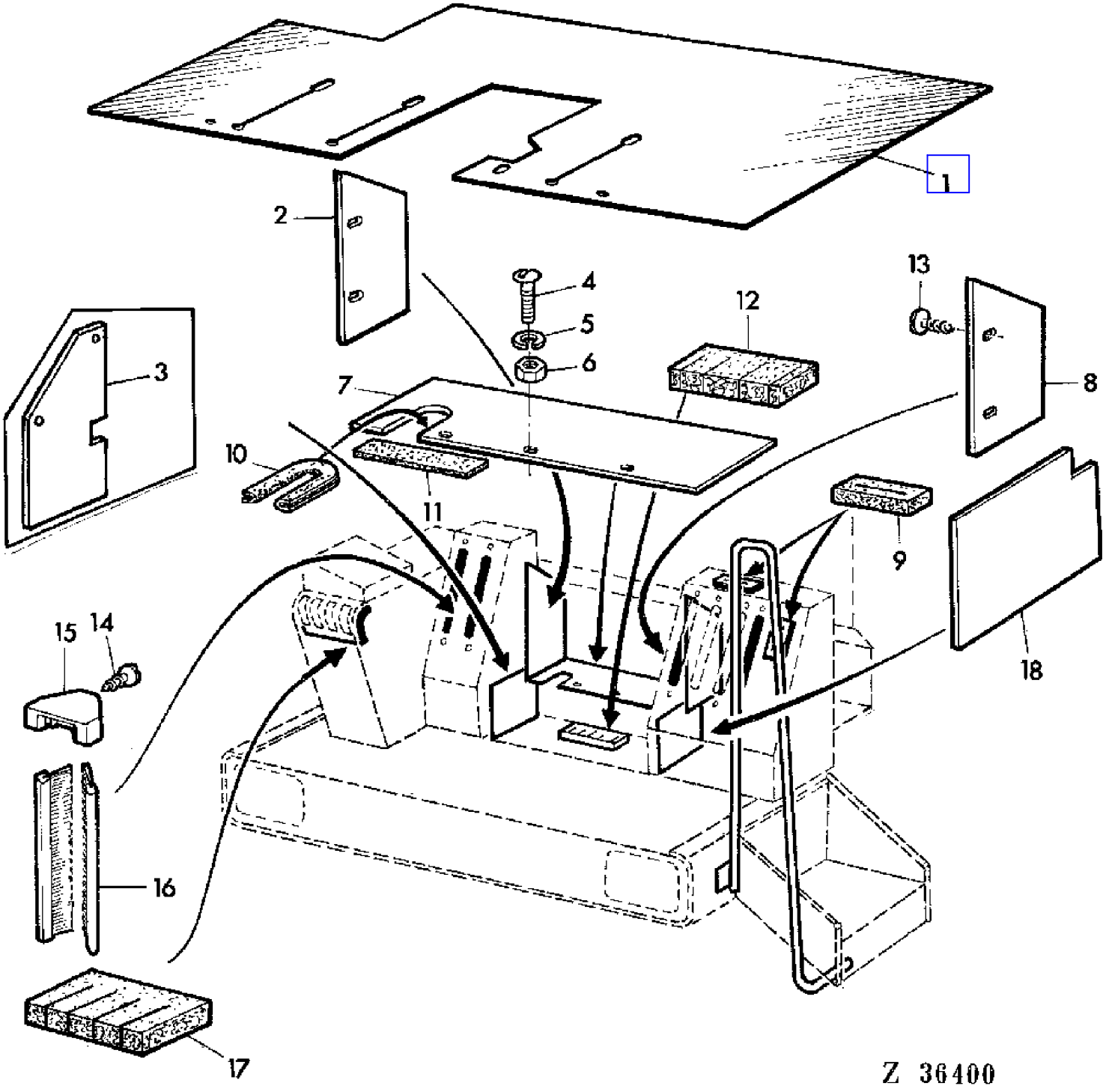

COPYRIGHT©1994 - 2008 DEERE & COMPANY Moline, Illinois All rights reserved

(3C12) RUBBER SEAL,COMBINE-OPERATOR'S PLATFORM
JOINTS CAOUTCHOUC,PLATE-FORME DE CONDUITE
ABDICHTUNG FAHRERPLATTFORM
GUARNIZIONI DI GOMMA DELLA PIATTAFORMA DELL'OPERATORE
PARA LA PLATAFORMA DE CONDUCCION-PIEZAS DE AISLAMIENTO
GUMMITATNING (FORARPLATTFORM)

KEY	PART NO.	PART NAME	QTY	SERIAL NO.			975	975HY/4	REMARKS
1	CA19451	MAT	1		-	026722	X	X	
	Z39465	MAT	1	026723	-		X	X	
2	CA19577	DUST SHIELD	1				X	X	
3	CA22649	DUST SHIELD	1		-	022077	X	X	
4	21M7031	SCREW	7				X	X	M6 X 15
5	12M7012	LOCK WASHER	7				X	X	6 MM
6	14M7027	NUT	7				X	X	M6
7	CA19576	DUST SHIELD	1				X	X	
8	CA19579	DUST SHIELD	1				X	X	
9	CA19567	FOAM PAD	2				X	X	
10	Z34892	GUARD	1				X	X	
11	CA21244	FOAM PAD	1				X	X	
12	CA19570	FOAM PAD	1				X	X	
13	37M7029	SCREW	AR				X	X	M5,5 X 13
14	37M7020	SCREW	AR				X	X	M4,2 X 13
15	CA19614	HOLDER	12				X	X	
16	CA19613	BRUSH	12				X	X	
17	CA19571	FOAM PAD	1				X	X	
18	CA19580	DUST SHIELD	1				X	X	

COPYRIGHT©1994 - 2008 DEERE & COMPANY Moline, Illinois All rights reserved

(2F08) SERVICE PLATFORM,REAR
PLATE-FORME ARRIERE D'ENTRETIEN
WARTUNGSPLATTFORM HINTEN
PIATTAFORMA DI MANUTENZIONE POSTERIORE
PLATAFORMA TRASERA
SERVICEPLATTFORM,BAKRE

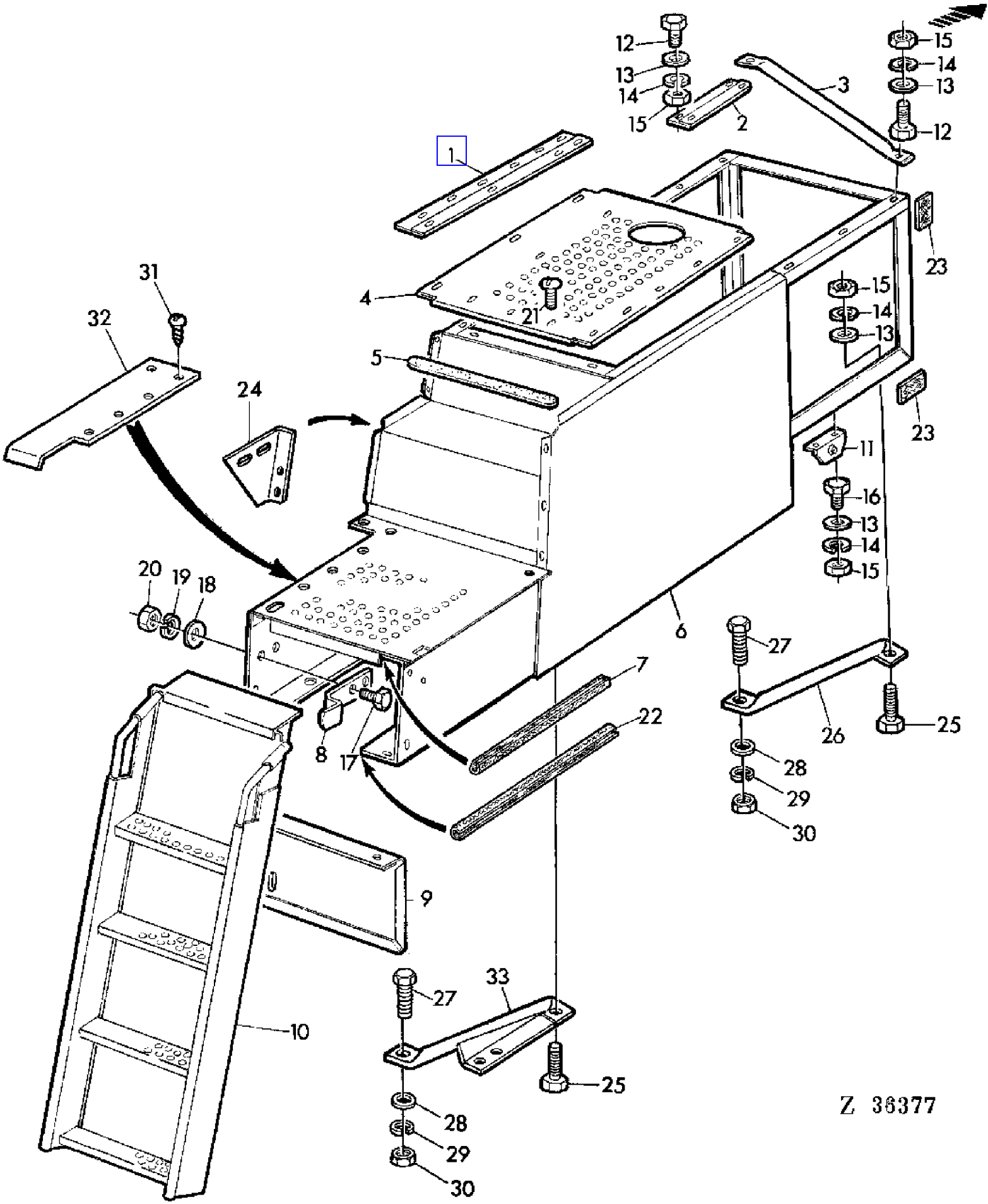

COPYRIGHT©1994 - 2008 DEERE & COMPANY Moline, Illinois All rights reserved

(2F08) SERVICE PLATFORM,REAR
PLATE-FORME ARRIERE D'ENTRETIEN
WARTUNGSPLATTFORM HINTEN
PIATTAFORMA DI MANUTENZIONE POSTERIORE
PLATAFORMA TRASERA
SERVICEPLATTFORM,BAKRE

KEY	PART NO.	PART NAME	QTY	SERIAL NO.	975	975HY/4	REMARKS
1	Z34554	PLATE	2		X	X	
2	Z34523	STRAP	2		X	X	
3	Z37917	BRACE	1		X	X	(SUB FOR Z34822)
4	Z34557	SHEET	1		X	X	
5	Z34592	GUARD	2		X	X	
6	AZ23598	PLATFORM	1		X	X	
7	Z30991	GUARD	2		X	X	LGTH = 650 MM
8	Z35138	LATCH	1		X	X	
9	Z35205	SHEET	1		X	X	
10	AZ23599	LADDER	1		X	X	
11	AZ23632	HOLDER	2		X	X	
12	19M7163	CAP SCREW	10		X	X	M8 X 25
13	24M7036	WASHER	10		X	X	9 MM
14	12M7008	LOCK WASHER	10		X	X	8 MM
15	14M7029	NUT	10		X	X	M8
16	19M7139	CAP SCREW	2		X	X	M8 X 20
17	19M7159	CAP SCREW	2		X	X	M6 X 16
18	24M7088	WASHER	2		X	X	6,6 MM
19	12M7012	LOCK WASHER	2		X	X	6 MM
20	14M7027	NUT	2		X	X	M6
21	21M7081	SCREW	AR		X	X	M8 X 15
22	Z35562	GUARD	2		X	X	LGTH = 1000 MM
23	Z35944	BOOT	2		X	X	
24	Z34522	HOLDER	1		X	X	
25	19M7288	CAP SCREW	AR		X	X	M8 X 30
26	Z39304	BRACE	1		X	X	(SUB FOR Z39044)
27	19M7168	CAP SCREW	AR		X	X	M10 X 30
28	24M7040	WASHER	AR		X	X	11 MM
29	12M7013	LOCK WASHER	AR		X	X	10 MM
30	14M7140	NUT	AR		X	X	M10
31	37M7029	SCREW	5		X	X	5,5 X 13 MM
32	Z38441	SHEET	1		X	X	
33	AZ28797	BRACE	1		X	X	

COPYRIGHT©1994 - 2008 DEERE & COMPANY Moline, Illinois All rights reserved

(4D08) SHOE CRANK AND PITMAN
BIELLE ET ARBRE DES SECOUEURS
KURBELSTANGE UND WELLE
MANOVELLA E ALBERO DEGLI SCUOTIPAGLIA
BIELA Y BARRA DE VAIVEN
HALMSKAKARENS VEVAXEL OCH VEVARM

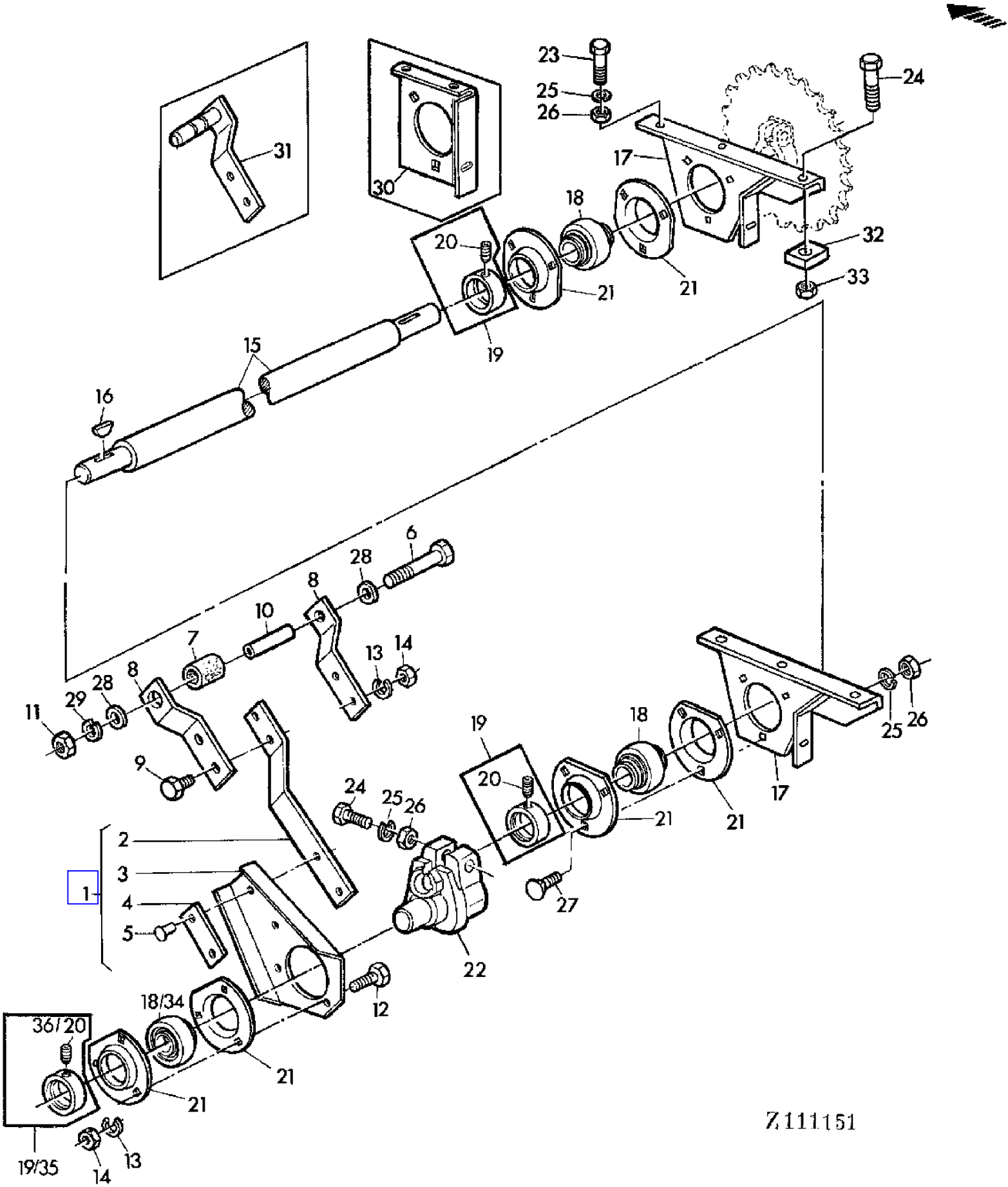

COPYRIGHT©1994 - 2008 DEERE & COMPANY Moline, Illinois All rights reserved

(4D08) SHOE CRANK AND PITMAN
BIELLE ET ARBRE DES SECOUEURS
KURBELSTANGE UND WELLE
MANOVELLA E ALBERO DEGLI SCUOTIPAGLIA
BIELA Y BARRA DE VAIVEN
HALMSKAKARENS VEVAXEL OCH VEVARM

KEY	PART NO.	PART NAME	QTY	SERIAL NO.			975	975HY/4	REMARKS
1	AZ17693	ARM	2		-	018097	X		ASSY, INCL KEYS 2-5
	AZ27685	ARM	2	018098	-		X	X	ASSY, INCL KEYS 2-5
2	Z20171	RETAINER	2		-	018097	X		
	Z38447	RETAINER	2	018098	-		X	X	
3	Z29076	BRACKET	2		-	018097	X		
	Z38446	BRACKET	2	018098	-		X	X	
4	Z20170	STRAP	2				X	X	
5	16M2552	RIVET	AR				X	X	8 X 32 MM
6	19M7414	CAP SCREW	2	018098	-		X	X	M12 X 90
7	P42100	BUSHING	AR				X	X	(SUB FOR AZ30964)
8	Z36806	RETAINER	2		-	018097	X		(SUB FOR Z20174)
	Z38443	RETAINER	4	018098	-		X	X	
9	19M7298	CAP SCREW	AR				X	X	M8 X 35
10	Z38442	SPACER	2	018098	-		X	X	
11	14M7031	NUT	AR	018098	-		X	X	M12
12	19M7139	CAP SCREW	AR				X	X	M8 X 20
13	12M7008	LOCK WASHER	AR				X	X	8 MM
14	14M7029	NUT	AR				X	X	M8
15	Z30988	SHAFT	1		-	018097	X		
	Z41242	SHAFT	1	018098	-		X	X	(SUB FOR Z38444)
16	26M6733	SHAFT KEY	AR				X	X	8 X 13 MM
17	AZ29647	BRACKET	2	026723	-		X	X	
18	JD39103	BALL BEARING	3				X	X	ID = 30 MM
19	AZ10045	ECCENTRIC LOCKING COLLAR	3				X	X	(FOR JD39103)
20	AZ19844	SET SCREW	3				X	X	KIT (FOR AZ10045)
21	Z40973	PRESSED FLANGED HOUSING	8				X	X	(SUB FOR Z38395)
22	Z11376	CRANK	1		-	018097	X		(SUB FOR Z10010)
	Z11377	CRANK	1	018098	-	XXXX	X	X	(ORD Z11383 W/ Z11432) (SUB FOR Z11208)
	Z11383	CRANK	1	027678	-		X	X	(SUB FOR Z11377)
23	19M7167	CAP SCREW	AR				X	X	M10 X 25
24	19M7287	CAP SCREW	AR				X	X	M10 X 50
25	12M7013	LOCK WASHER	AR				X	X	10 MM
26	14M7140	NUT	AR				X	X	M10
27	03M7017	BOLT	AR				X	X	M10 X 25
28	24M7047	WASHER	AR	018098	-		X	X	13 MM
29	12M7014	LOCK WASHER	AR	018098	-		X	X	12 MM
30	Z36675	BRACKET	2		-	026722	X	X	
31	AZ25769	HOLDER	2		-	018097	X		(SUB FOR AZ10085)
32	Z40124	SPACER	1				X	X	
33	14M7167	LOCK NUT	1				X	X	M10
34	JD39102	BALL BEARING	1				X	X	ID = 25 MM (FOR Z11376)
35	AZ10044	ECCENTRIC LOCKING COLLAR	1				X	X	(FOR JD39102)

COPYRIGHT©1994 - 2008 DEERE & COMPANY Moline, Illinois All rights reserved

(4D08) SHOE CRANK AND PITMAN
BIELLE ET ARBRE DES SECOUEURS
KURBELSTANGE UND WELLE
MANOVELLA E ALBERO DEGLI SCUOTIPAGLIA
BIELA Y BARRA DE VAIVEN
HALMSKAKARENS VEVAXEL OCH VEVARM

KEY	PART NO.	PART NAME	QTY	SERIAL NO.	975	975HY/4	REMARKS
36	AZ19843	SET SCREW	1		X	X	KIT (FOR AZ10044)

COPYRIGHT©1994 - 2008 DEERE & COMPANY Moline, Illinois All rights reserved

(1A09) SHORT BLOCK ASSEMBLY
BLOC-CYL.AVEC EQUIP.MOBILE
RUMPFMOTOR
GRUPPO MOTORE CORTO
BLOQUE DE CIL.CON PIEZ.MOV.
KORTMOTORENHET

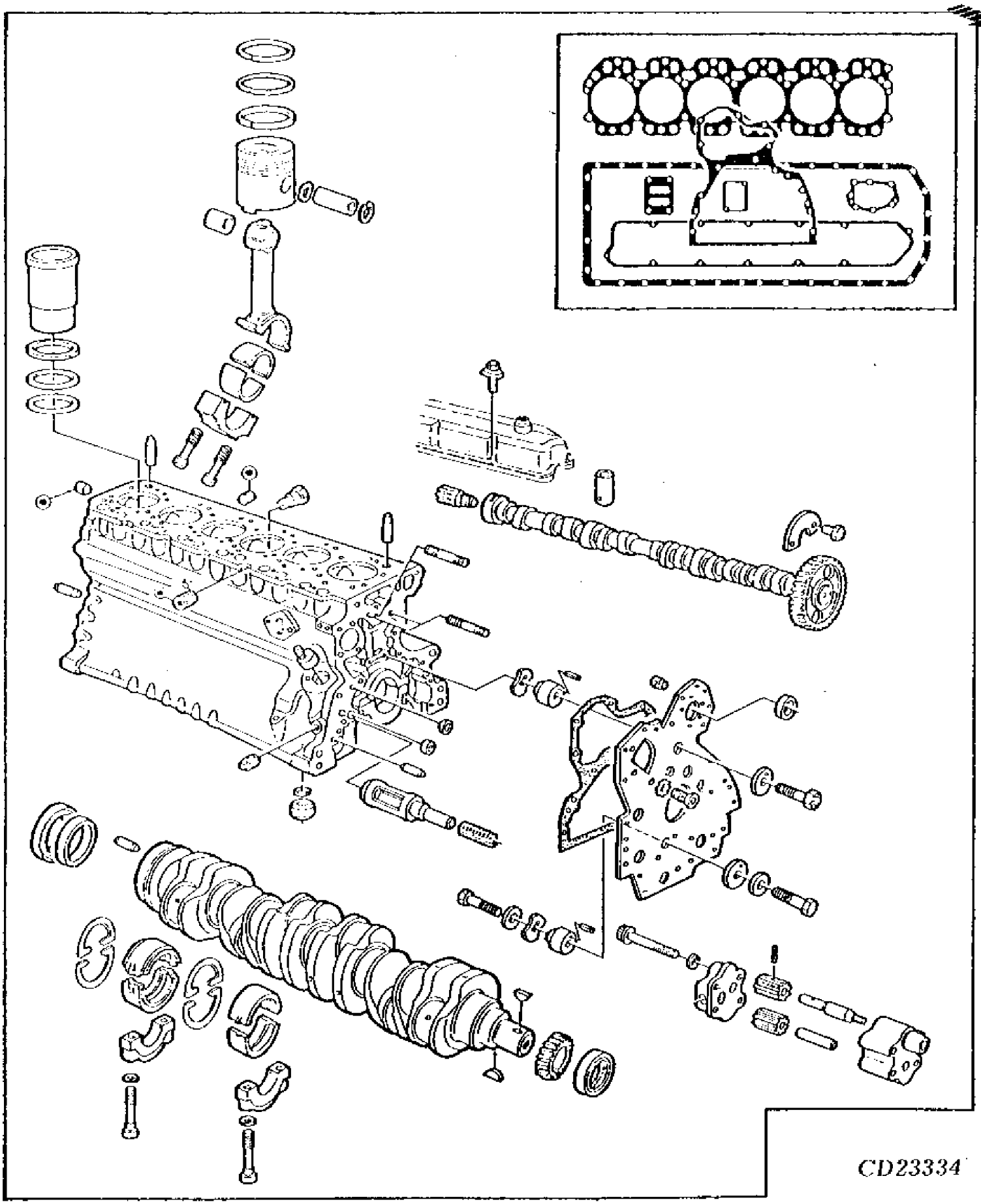

COPYRIGHT©1994 - 2008 DEERE & COMPANY Moline, Illinois All rights reserved

(1A09) SHORT BLOCK ASSEMBLY
BLOC-CYL.AVEC EQUIP.MOBILE
RUMPFMOTOR
GRUPPO MOTORE CORTO
BLOQUE DE CIL.CON PIEZ.MOV.
KORTMOTORENHET

KEY	PART NO.	PART NAME	QTY	ENGINE SERIAL NO.	975	975HY/4	REMARKS
1	RE16818	SHORT BLOCK ASSEMBLY	AR	- 403755	X		ASSY (ORD RE25571, (16) R85363) (SUB FOR AR97289 OR DD13282)
	RE25571	SHORT BLOCK ASSEMBLY	AR	- 403755	X		ASSY

COPYRIGHT©1994 - 2008 DEERE & COMPANY Moline, Illinois All rights reserved

(2F02) SIDE PANEL,LEFT HAND
PANNEAU LATERAL GAUCHE
SEITENWAND LINKS
FIANCATA SINISTRA
PANEL LATERAL IZQUIERDO
SIDOVAGG,VANSTER

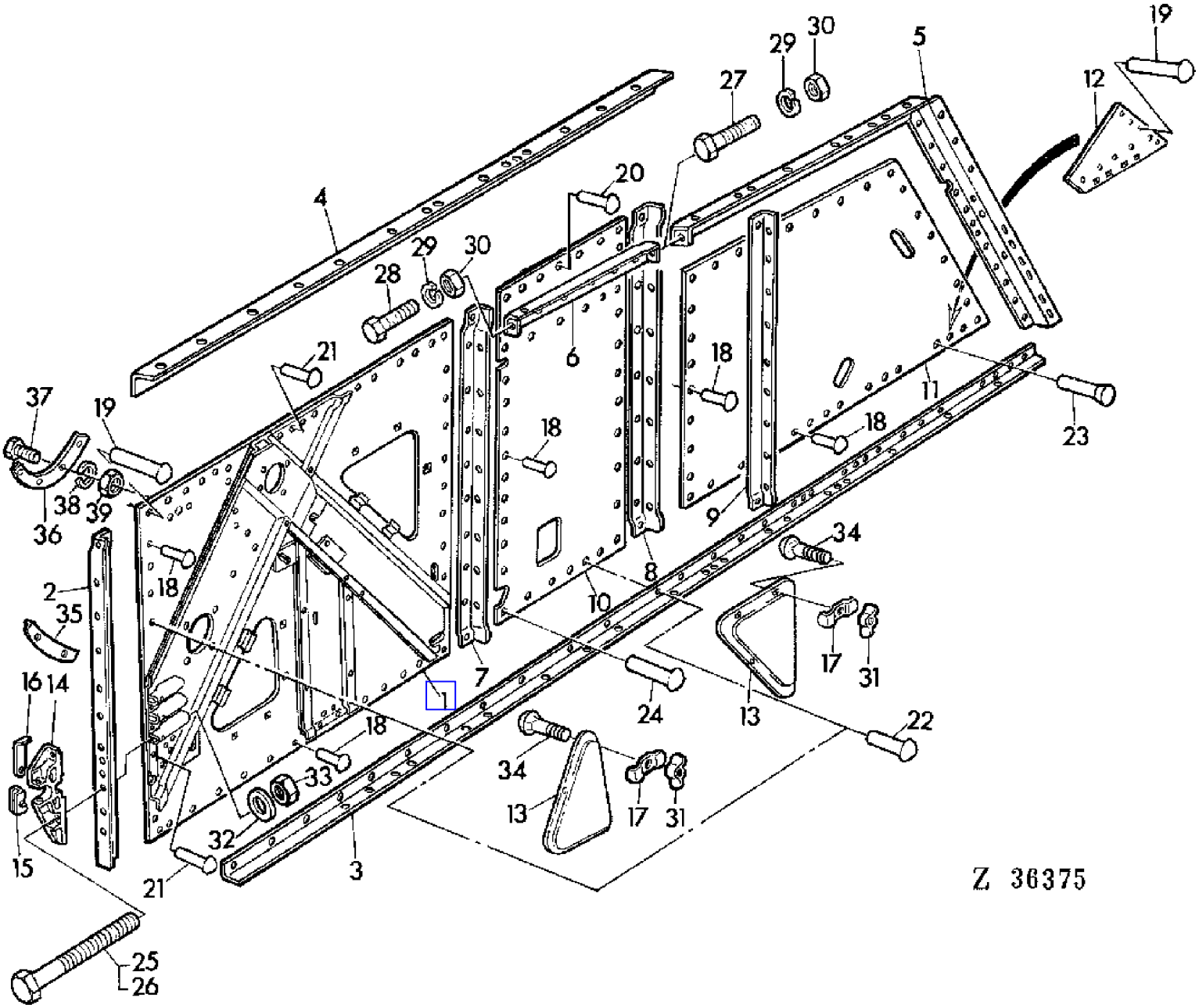

COPYRIGHT©1994 - 2008 DEERE & COMPANY Moline, Illinois All rights reserved

(2F02) SIDE PANEL,LEFT HAND
PANNEAU LATERAL GAUCHE
SEITENWAND LINKS
FIANCATA SINISTRA
PANEL LATERAL IZQUIERDO
SIDOVAGG,VANSTER

KEY	PART NO.	PART NAME	QTY	SERIAL NO.	975	975HY/4	REMARKS
1	AZ29749	SIDE WALL	1		X	X	(SUB FOR AZ22744)
2	Z37785	ANGLE	1		X	X	(SUB FOR Z33816)
3	Z33805	ANGLE	1		X	X	
4	Z33828	ANGLE	1		X	X	
5	AZ22753	FRAME	1		X	X	
6	AZ10470	FRAME	1		X	X	
7	Z33807	ANGLE	1		X	X	
8	Z33842	ANGLE	1		X	X	
9	Z33840	ANGLE	1		X	X	
10	Z33832	SIDE WALL	1		X	X	
11	Z33839	SIDE WALL	1		X	X	
12	Z32672	REINFORCEMENT	1		X	X	
13	Z20917	COVER	2		X	X	
14	Z10813	HANGER	1		X	X	
15	H10835	RETAINER	1		X	X	
16	Z20916	LATCH	1		X	X	
17	Z20367	CLAMP	7		X	X	
18	16M2524	RIVET	AR		X	X	6 X 18 MM
19	16M1528	RIVET	AR		X	X	10 X 28 MM
20	16M4701	RIVET	AR		X	X	6 X 15 MM
21	16M2526	RIVET	AR		X	X	6 X 22 MM
22	16M6724	RIVET	AR		X	X	6 X 18 MM
23	16M7076	RIVET	AR		X	X	10 X 32 MM
24	16M1527	RIVET	AR		X	X	10 X 26 MM
25	19M7500	CAP SCREW	3		X	X	M16 X 170
26	19M7368	CAP SCREW	AR		X	X	M16 X 50
27	19M7168	CAP SCREW	AR		X	X	M10 X 30
28	19M7167	CAP SCREW	AR		X	X	M10 X 25
29	12M7013	LOCK WASHER	AR		X	X	10 MM
30	14M7140	NUT	AR		X	X	M10
31	14M7020	WING NUT	AR		X	X	M8
32	24M7053	WASHER	AR		X	X	17 MM
33	14M7170	LOCK NUT	AR		X	X	M16
34	03M7054	BOLT	AR		X	X	M8 X 20
35	Z20912	DEFLECTOR	1		X	X	
36	Z20913	STRIPPER	1		X	X	
37	19M7159	CAP SCREW	AR		X	X	M6 X 15
38	12M7012	LOCK WASHER	AR		X	X	6 MM
39	14M7027	NUT	AR		X	X	M6

COPYRIGHT©1994 - 2008 DEERE & COMPANY Moline, Illinois All rights reserved

(3B22) SIDE PANEL,LEFT-HAND
PANNEAU LATERAL GAUCHE
SEITENWAND LINKS
FIANCATA SINISTRA
PANEL LATERAL IZQUIERDO
VANSTER,SIDOVAGG

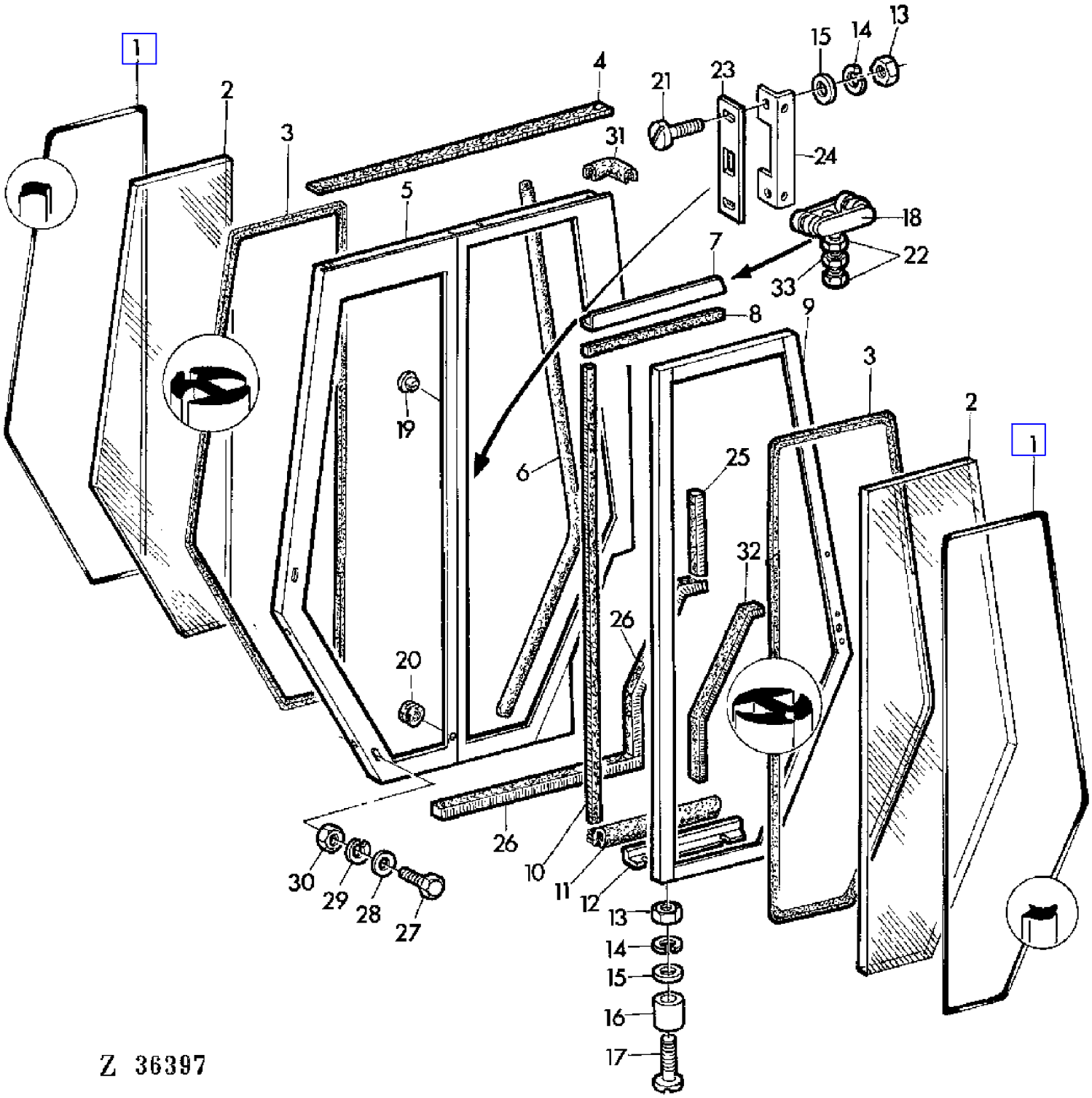

COPYRIGHT©1994 - 2008 DEERE & COMPANY Moline, Illinois All rights reserved

(3B22) SIDE PANEL,LEFT-HAND
PANNEAU LATERAL GAUCHE
SEITENWAND LINKS
FIANCATA SINISTRA
PANEL LATERAL IZQUIERDO
VANSTER,SIDOVAGG

KEY	PART NO.	PART NAME	QTY	CAB SERIAL NO.	975	975HY	REMARKS
1	CA19405	WEATHERSTRIP	2		X	X	LGTH = 4430 MM
2	CA19415	WINDOWPANE	2		X	X	
	CA23646	WINDOWPANE	1		X	X	(A)
3	CA19404	GASKET	2		X	X	LGTH = 4430 MM
4	CA19606	WEATHERSTRIP	1		X	X	LGTH = 5600 MM (30 X 6 MM)
5	DA22891	FRAME	1		X	X	(ORD W/ CA19976) (SUB FOR DA19328, DA20302)
6	CA19885	WEATHERSTRIP	1	- K0500Z	X		LGTH = 1850 MM (20 X 6 MM)
	CA19976	SEAL	1	K0501Z -	X	X	LGTH = 1820 MM
7	CA19377	HANGER	1		X	X	
8	CA19606	WEATHERSTRIP	1		X	X	LGTH = 5600 MM (30 X 6 MM)
9	DA19365	FRAME	1		X	X	
10	CA19976	SEAL	1		X	X	LGTH = 1820 MM
11	CA19609	BRUSH	1		X	X	LGTH = 445 MM
12	CA19379	ANGLE	1		X	X	
13	14M7027	NUT	8		X	X	M6
14	12M7012	LOCK WASHER	8		X	X	6 MM
15	24M7088	WASHER	6		X	X	6,6 MM
16	CA19395	BUSHING	2		X	X	
17	21M7221	BOLT	2		X	X	M6 X 40
18	DA19432	ROLLER	2		X	X	
19	Z31472	PLUG	10		X	X	9,5 MM
	CA20315	PLUG	3		X	X	15 MM
20	Z21238	GROMMET	1		X	X	
21	21M7031	SCREW	8		X	X	M6 X 15
22	14M7203	NUT	4		X	X	M8
23	CA19421	LATCH	2		X	X	
24	CA19902	PLATE	1		X	X	
25	CA19500	WEATHERSTRIP	1		X	X	LGTH = 1360 MM (30 X 30 MM)
26	CA19554	WEATHERSTRIP	1		X	X	LGTH = 2950 MM (25 X 25 MM)
27	19M7179	CAP SCREW	2		X	X	M10 X 50
28	24M7040	WASHER	2		X	X	11 MM
29	12M7013	LOCK WASHER	2		X	X	10 MM
30	14M7140	NUT	2		X	X	M10
31	CA19903	GASKET	1		X	X	LGTH = 230 MM
32	CA19420	WEATHERSTRIP	AR		X	X	LGTH = 1850 MM (20 X 6 MM)
33	14M7029	NUT	4		X	X	M8 |

(A) TINTED GLASS
VERRE TEINTE
GETOENTES GLAS
CRISTALLO TINTEGGIATO
CRISTAL TINTURADO
FARGAD RUTOR

COPYRIGHT©1994 - 2008 DEERE & COMPANY Moline, Illinois All rights reserved

(2E24) SIDE PANEL,RIGHT-HAND
PANNEAU LATERAL DROIT
SEITENWAND RECHTS
FIANCATA DESTRA
PANEL LATERAL DERECHO
SIDOVAGG,HOGER

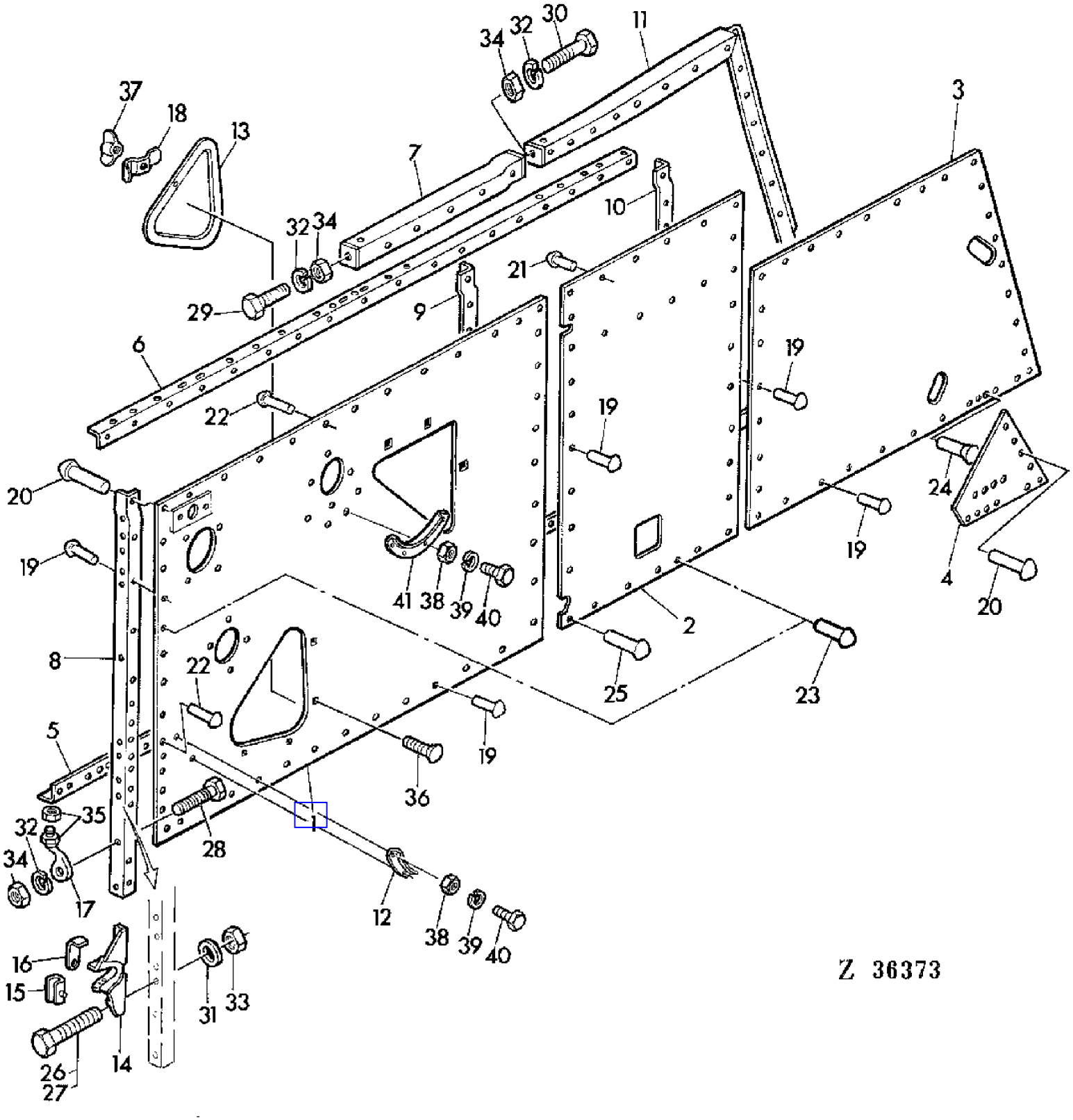

COPYRIGHT©1994 - 2008 DEERE & COMPANY Moline, Illinois All rights reserved

(2E24) SIDE PANEL,RIGHT-HAND
PANNEAU LATERAL DROIT
SEITENWAND RECHTS
FIANCATA DESTRA
PANEL LATERAL DERECHO
SIDOVAGG,HOGER

KEY	PART NO.	PART NAME	QTY	SERIAL NO.	975	975HY/4	REMARKS
1	AZ29748	SIDE WALL	1		X	X	(SUB FOR AZ22745, AZ27225)
2	Z33832	SIDE WALL	1		X	X	
3	Z33839	SIDE WALL	1		X	X	
4	Z32673	REINFORCEMENT	1		X	X	
5	Z33804	ANGLE	1		X	X	
6	Z33829	ANGLE	1		X	X	
7	AZ23101	FRAME	1		X	X	
8	Z37786	ANGLE	1		X	X	(SUB FOR Z33817)
9	Z33808	ANGLE	1		X	X	
10	Z33841	ANGLE	1		X	X	
11	AZ22752	FRAME	1		X	X	
12	Z20912	DEFLECTOR	1		X	X	
13	Z20917	COVER	2		X	X	
14	Z10814	HANGER	1		X	X	
15	H10835	RETAINER	1		X	X	
16	Z20916	LATCH	1		X	X	
17	Z20915	BRACKET	1		X	X	
18	Z20367	CLAMP	7		X	X	
19	16M2524	RIVET	AR		X	X	6 X 18 MM
20	16M1528	RIVET	AR		X	X	10 X 28 MM
21	16M4701	RIVET	AR		X	X	6 X 15 MM
22	16M2526	RIVET	AR		X	X	6 X 22 MM
23	16M6724	RIVET	AR		X	X	6 X 18 MM
24	16M7076	RIVET	AR		X	X	10 X 32 MM
25	16M1527	RIVET	AR		X	X	10 X 26 MM
26	19M7639	CAP SCREW	3		X	X	M16 X 180
27	19M7368	CAP SCREW	3		X	X	M16 X 50
28	19M7169	CAP SCREW	1		X	X	M10 X 35
29	19M7167	CAP SCREW	AR		X	X	M10 X 25
30	19M7168	CAP SCREW	AR		X	X	M10 X 30
31	24M7053	WASHER	AR		X	X	17 MM
32	12M7013	LOCK WASHER	AR		X	X	10 MM
33	14M7170	LOCK NUT	AR		X	X	M16
34	14M7140	NUT	AR		X	X	M10
35	14M7031	NUT	AR		X	X	M12
36	03M7054	BOLT	AR		X	X	M8 X 20
37	14M7020	WING NUT	7		X	X	8 MM
38	14M7027	NUT	AR		X	X	6 MM
39	12M7012	LOCK WASHER	AR		X	X	6 MM
40	19M7159	CAP SCREW	AR		X	X	M6 X 15
41	Z20913	STRIPPER	1		X	X	

COPYRIGHT©1994 - 2008 DEERE & COMPANY Moline, Illinois All rights reserved

(3B18) SIDE PANEL,RIGHT-HAND
PANNEAU LATERAL DROIT
SEITENWAND RECHTS
FIANCATA DESTRA
PANEL LATERAL DERECHO
HOGER SIDOVAGG

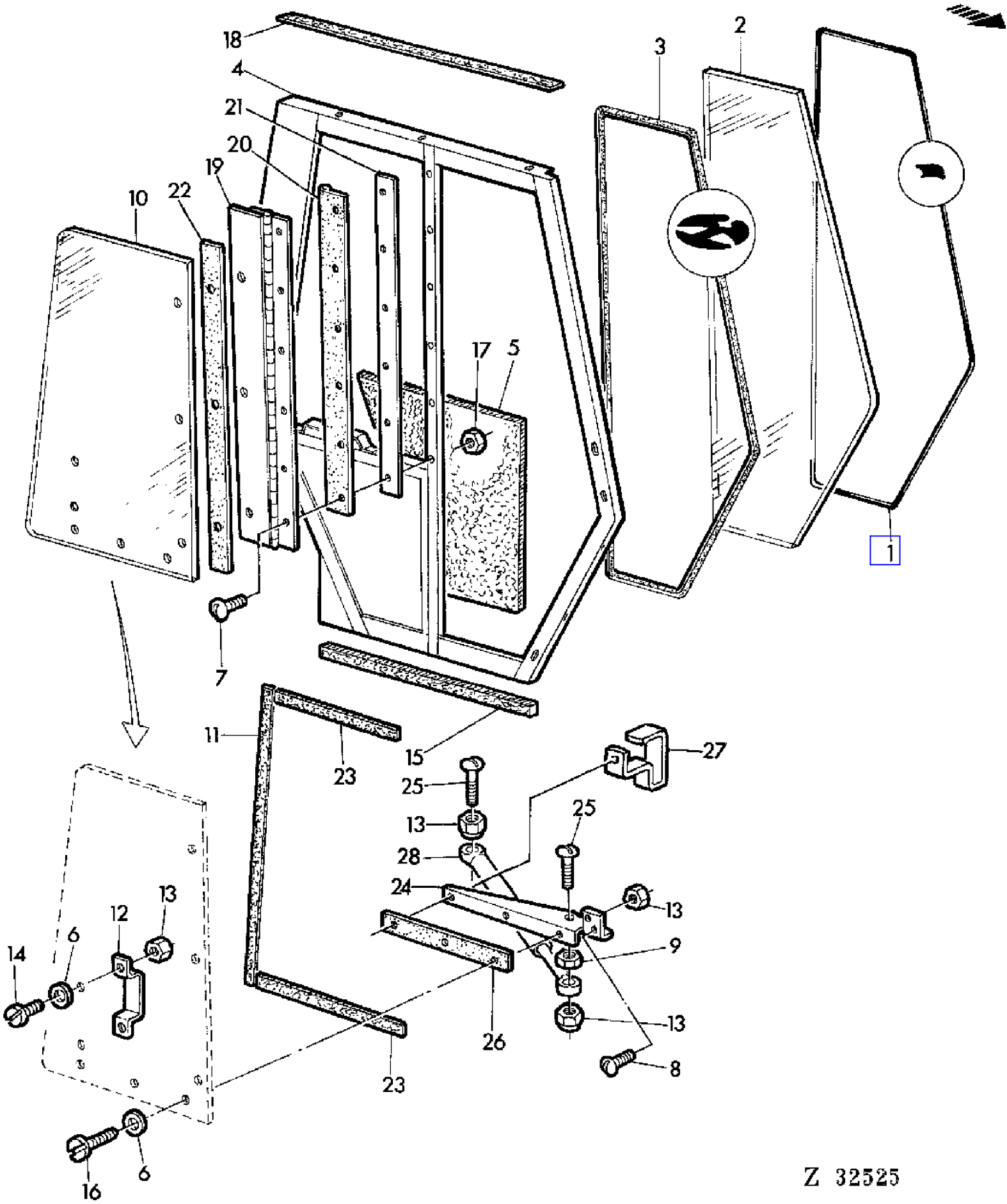

COPYRIGHT©1994 - 2008 DEERE & COMPANY Moline, Illinois All rights reserved

(3B18) SIDE PANEL,RIGHT-HAND
PANNEAU LATERAL DROIT
SEITENWAND RECHTS
FIANCATA DESTRA
PANEL LATERAL DERECHO
HOGER SIDOVAGG

KEY	PART NO.	PART NAME	QTY	SERIAL NO.	975	975HY/4	REMARKS
1	CA19405	WEATHERSTRIP	1		X	X	LGTH = 4330 MM
2	CA19415	WINDOWPANE	1		X	X	
	CA23646	WINDOWPANE	1		X	X	(A)
3	CA19404	GASKET	1		X	X	LGTH = 4330 MM
4	DA22892	FRAME	1		X	X	(ORD W/ CA19980) (SUB FOR DA19329, DA20303)
5	CA19430	BARRIER	1		X	X	
6	CA19649	WASHER	9		X	X	
7	21M7033	SCREW	AR		X	X	M4 X 15
8	21M7031	SCREW	AR		X	X	M6 X 15
9	14M7027	NUT	1		X	X	M6
10	CA19423	WINDOWPANE	1		X	X	
	CA23647	WINDOWPANE	1		X	X	(A)
11	CA19420	WEATHERSTRIP	1		X	X	LGTH = 1820 MM (20 X 6 MM)
12	DA19603	GRIP	1		X	X	
13	14M7165	LOCK NUT	AR		X	X	M6
14	CA19604	BOLT	3		X	X	
15	CA19554	WEATHERSTRIP	1		X	X	LGTH = 2950 MM (25 X 25 MM)
16	CA19605	BOLT	5		X	X	
17	14M7139	NUT	AR		X	X	M4
18	CA19606	WEATHERSTRIP	1		X	X	LGTH = 4700 MM (30 X 6 MM)
19	DA19391	HINGE	1		X	X	
20	CA19424	WEATHERSTRIP	1		X	X	
21	CA19380	REINFORCEMENT	1		X	X	
22	CA19646	WEATHERSTRIP	1		X	X	
23	CA19553	WEATHERSTRIP	2		X	X	LGTH = 1240 MM (20 X 8 MM)
24	CA19640	HOLDER	1		X	X	
25	21M7159	SCREW	2		X	X	M6 X 25
26	CA19645	WEATHERSTRIP	1		X	X	
27	CA22346	LATCH	1		X	X	
28	AZ29157	DASHPOT	1		X	X	(SUB FOR CA19979)

(A) TINTED GLASS
VERRE TEINTE
GETOENTES GLAS
CRISTALLO TINTEGGIATO
CRISTAL TINTURADO
FARGAD RUTOR

COPYRIGHT©1994 - 2008 DEERE & COMPANY Moline, Illinois All rights reserved

(3B20) SIDE PANEL,RIGHT-HAND
PANNEAU LATERAL DROIT
SEITENWAND RECHTS
FIANCATA DESTRA
PANEL LATERAL DERECHO
HOGER SIDOVAGG

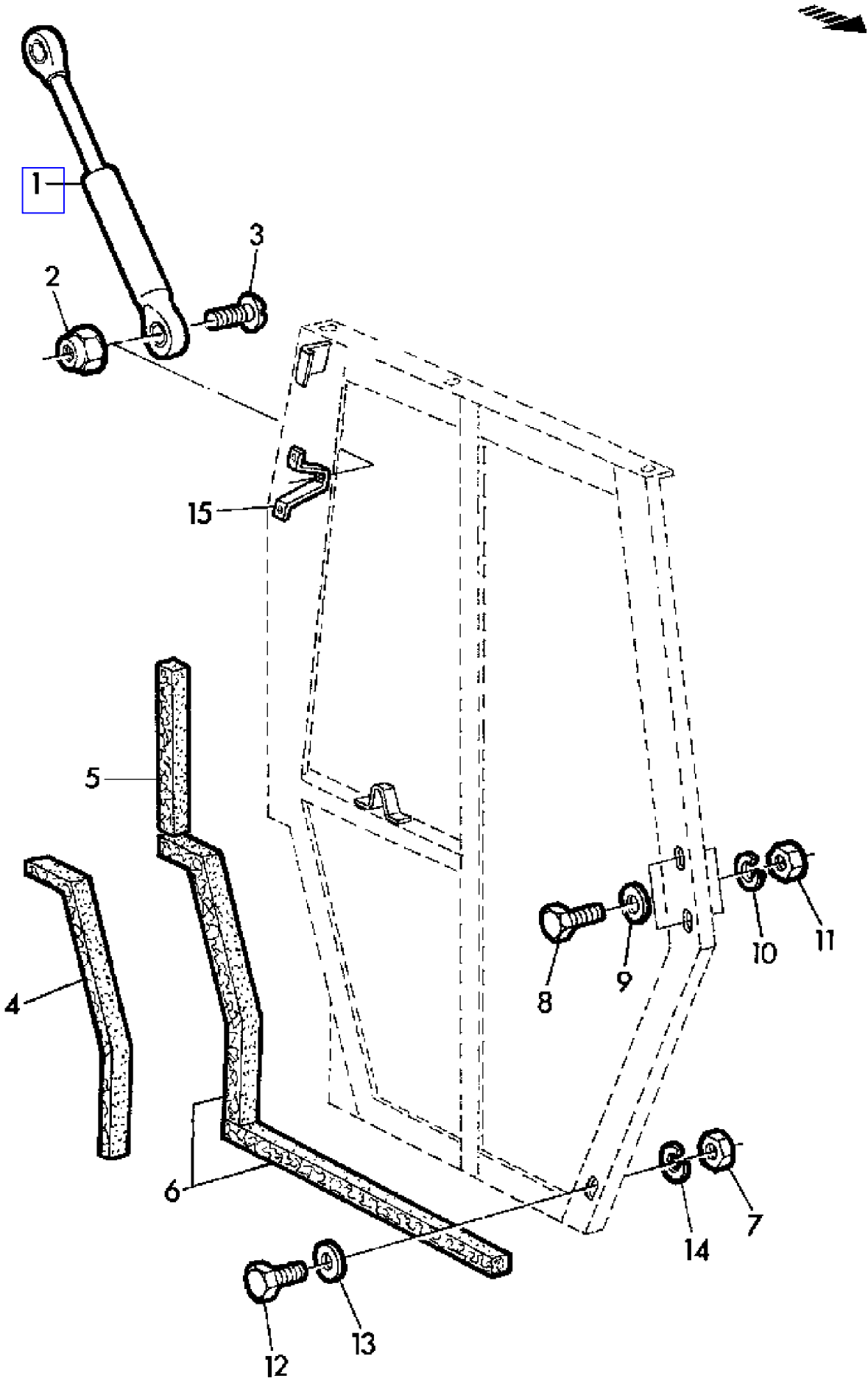

COPYRIGHT©1994 - 2008 DEERE & COMPANY Moline, Illinois All rights reserved

(3B20) SIDE PANEL,RIGHT-HAND
PANNEAU LATERAL DROIT
SEITENWAND RECHTS
FIANCATA DESTRA
PANEL LATERAL DERECHO
HOGER SIDOVAGG

KEY	PART NO.	PART NAME	QTY	CAB SERIAL NO.	975	975HY	REMARKS
1	AZ29157	DASHPOT	1		X	X	(SUB FOR CA19979)
2	14M7165	LOCK NUT	1		X	X	M6
3	21M7159	SCREW	1		X	X	M6 X 25
4	CA22369	WEATHERSTRIP	AR		X	X	LGTH = 1500 MM (6 X 20 MM), AR
5	CA19500	WEATHERSTRIP	1		X	X	LGTH = 1360 MM (30 X 30 MM)
6	CA19554	WEATHERSTRIP	1		X	X	LGTH = 2950 MM (25 X 25 MM)
7	14M7140	NUT	AR		X	X	M10
8	19M7182	CAP SCREW	2		X	X	M12 X 50
9	24M7038	WASHER	2		X	X	14 MM
10	12M7014	LOCK WASHER	2		X	X	12 MM
11	14M7031	NUT	2		X	X	M12
12	19M7179	CAP SCREW	AR		X	X	M10 X 50
13	24M7040	WASHER	AR		X	X	11 MM
14	12M7013	LOCK WASHER	AR		X	X	10 MM
15	CA19980	RETAINER	1	K0501Z -	X		

COPYRIGHT©1994 - 2008 DEERE & COMPANY Moline, Illinois All rights reserved

(2A11) SPINDLE KNUCKLE
FUSEE
ACHSSCHENKEL
FUSELLI
MANGUETA
SPINDELHUS

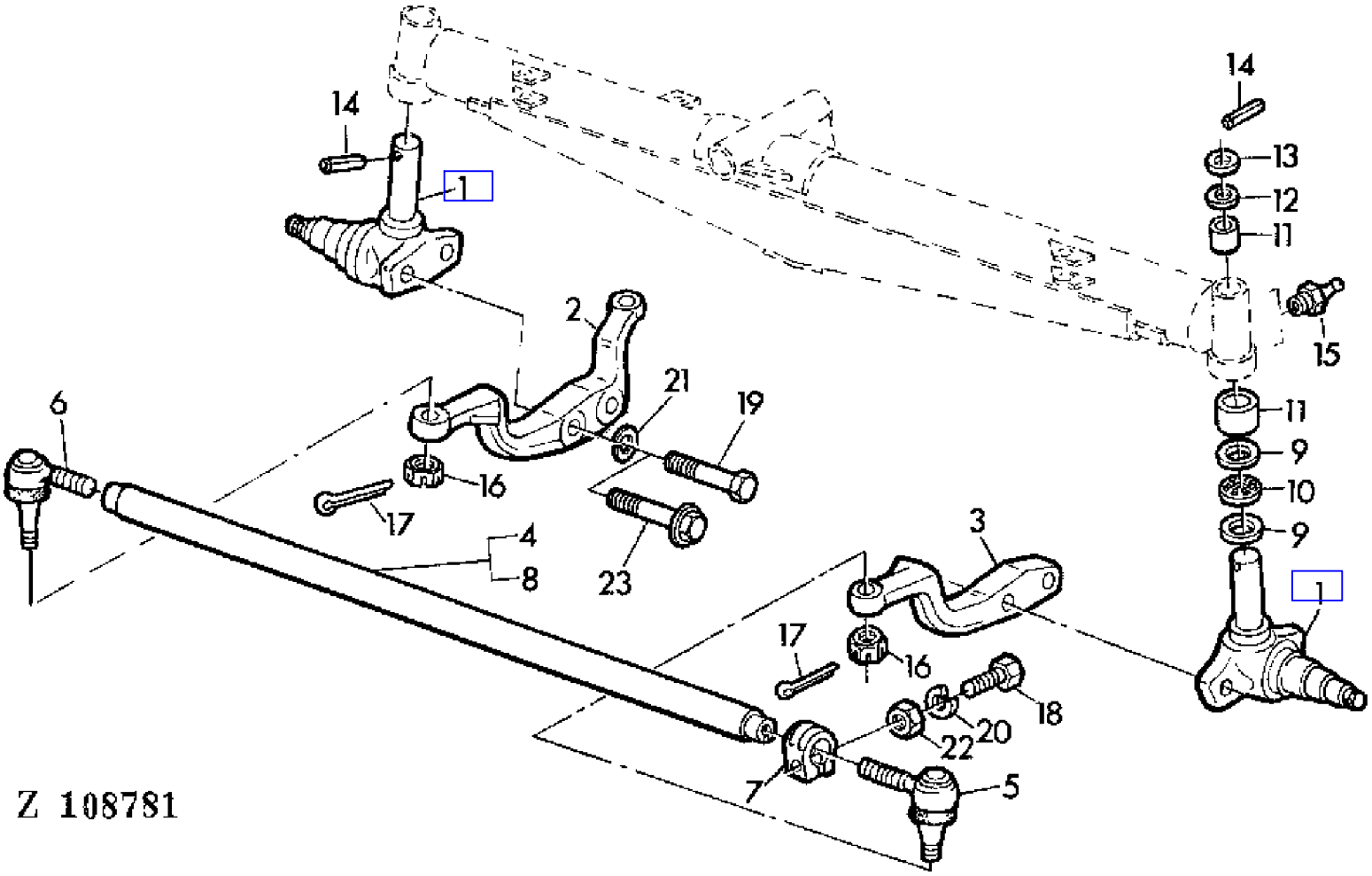

COPYRIGHT©1994 - 2008 DEERE & COMPANY Moline, Illinois All rights reserved

(2A11) SPINDLE KNUCKLE
FUSEE
ACHSSCHENKEL
FUSELLI
MANGUETA
SPINDELHUS

KEY	PART NO.	PART NAME	QTY	SERIAL NO.	975	975HY/4	REMARKS
1	AZ29047	KNUCKLE	2	- 023197	X	X	(SUB FOR AZ23688)
2	Z10601	LEVER	1	- 023197	X	X	RH (ORD Z11570 W/ AZ35294, AZ35296, (2) Z43390, 11M7024, 14M5408, 14M5495)
	Z11570	STEERING CONTROL UNIT	1	- 023197	X	X	RH (SUB FOR Z10601 APPL)
3	Z10598	LEVER	1	- 023197	X	X	LH (ORD Z11569 W/ AZ35295, (2) Z43390, 14M5495)
	Z11569	STEERING CONTROL UNIT	1	- 023197	X	X	LH (SUB FOR Z10598 APPL)
4	AZ28920	TIE ROD	1	- 023197	X		AR, INCL KEYS 5-8,18,20,22 LGTH = 2461 MM
	AZ25046	TIE ROD	1	- 023197	X	X	INCL KEYS 5-8,18,20,22 LGTH = 1903 MM
	AZ17387	TIE ROD	1	- 023197	X	X	INCL KEYS 5-8,18,20,22 LGTH = 2225 MM
5	AZ10850	BALL JOINT	1	- 023197	X	X	LH
	AZ35295	BALL JOINT	1	- 023197	X	X	LH (FOR Z11569)
6	AZ35294	BALL JOINT	1	- 023197	X	X	RH (FOR Z11570)
	AZ10851	BALL JOINT	1	- 023197	X	X	(A) RH
7	Z29505	CLAMP	2	- 023197	X	X	
8	Z36064	TIE ROD	1	- 023197	X	X	LGTH = 1813 MM
	Z28833	TIE ROD	1	- 023197	X	X	LGTH = 2135 MM
	Z39430	TIE ROD	1	- 023197	X		AR, LGTH = 2371 MM
9	JD39128	THRUST BEARING	4	- 023197	X	X	
10	JD39129	NEEDLE BEARING	2	- 023197	X	X	
11	Z27522	BUSHING	4	- 023197	X	X	
12	Z27524	SHIM	AR	- 023197	X	X	TK = 0,5 MM
13	Z27523	WASHER	AR	- 023197	X	X	TK = 2 MM
14	34M3871	SPRING PIN	2	- 023197	X	X	6 X 55 MM
15	58M7004	LUBRICATION FITTING	4	- 023197	X	X	6 X 1 MM
16	14M7177	NUT	2	- 023197	X	X	M12 X 1,5
	14M5495	NUT	2	- 023197	X	X	M14 X 1,5 (FOR AZ35294, AZ35295)
17	11M7014	COTTER PIN	2	- 023197	X	X	3 X 25 MM
18	19M7323	CAP SCREW	2	- 023197	X	X	M8 X 40
19	19M7416	CAP SCREW	4	- 023197	X	X	M18 X 75
20	12M7008	LOCK WASHER	2	- 023197	X	X	8 MM
21	12M5846	LOCK WASHER	4	- 023197	X	X	18 MM
22	14M7029	NUT	2	- 023197	X	X	M8
23	Z43390	CAP SCREW	4	- 023197	X	X	(FOR Z11569, Z11570)

(A) LEFT-HAND THREAD
PAS A GAUCHE
LINKSGEWINDE
FILETTO SINISTRORSO
ROSCA DE PASO IZQUIERDO
VANSTERGANGAD

COPYRIGHT©1994 - 2008 DEERE & COMPANY Moline, Illinois All rights reserved

(2A13) SPINDLE KNUCKLE
FUSEE
ACHSSCHENKEL
FUSELLI
MANGUETA
SPINDELHUS

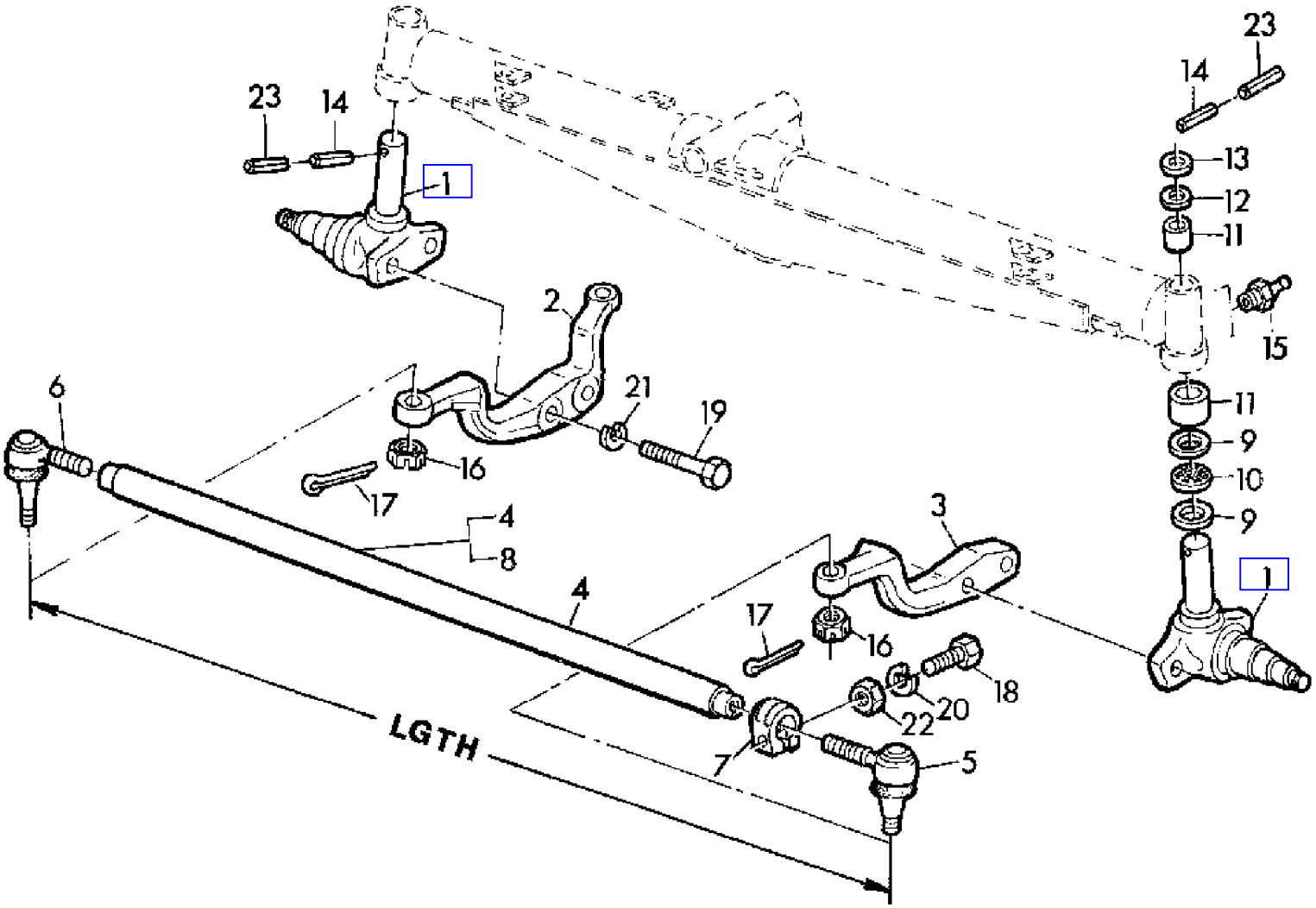

COPYRIGHT©1994 - 2008 DEERE & COMPANY Moline, Illinois All rights reserved

(2A13) SPINDLE KNUCKLE
FUSEE
ACHSSCHENKEL
FUSELLI
MANGUETA
SPINDELHUS

KEY	PART NO.	PART NAME	QTY	SERIAL NO.		975	975HY/4	REMARKS
1	AZ28787	KNUCKLE	2	023198	-	X	X	
2	Z11250	LEVER	1	023198	-	X	X	RH
3	Z11247	LEVER	1	023198	-	X	X	LH
4	AZ28780	TIE ROD	1	023198	-	X	X	INCL KEYS 5-8,18,20,22 LGTH = 1903 MM
	AZ28781	TIE ROD	1	023198	-	X	X	INCL KEYS 5-8,18,20,22 LGTH = 2213 MM
	AZ28945	TIE ROD	1	023198	-	X		AR, INCL KEYS 5-8,18,20,22 LGTH = 2449 MM
5	AZ28778	BALL JOINT	1	023198	-	X	X	(A)
6	AZ28777	BALL JOINT	1	023198	-	X	X	
7	Z37832	CLAMP	2	023198	-	X	X	
8	Z39340	TIE ROD	1	023198	-	X	X	LGTH = 1803 MM
	Z39342	TIE ROD	1	023198	-	X	X	LGTH = 2113 MM
	Z39432	TIE ROD	1	023198	-	X		AR, LGTH = 2349 MM
9	JD10146	THROW-OUT BEARING	4	023198	-	X	X	
10	JD10147	THROW-OUT BEARING	2	023198	-	X	X	
11	Z39339	BUSHING	4	023198	-	X	X	
12	Z39330	SHIM	AR	023198	-	X	X	TK = 0,5 MM
13	Z39331	WASHER	AR	023198	-	X	X	TK = 2 MM
14	34M7052	SPRING PIN	2	023198	-	X	X	8 X 65 MM
15	58M7004	LUBRICATION FITTING	AR	023198	-	X	X	6 X 1 MM
16	14M5495	NUT	2	023198	-	X	X	M14 X 1,5
17	11M7017	COTTER PIN	2	023198	-	X	X	3,2 X 32 MM
18	19M7180	CAP SCREW	2	023198	-	X	X	M10 X 45
19	19M7892	CAP SCREW	4	023198	-	X	X	M20 X 80
20	12M7013	LOCK WASHER	2	023198	-	X	X	10 MM
21	12M7039	LOCK WASHER	4	023198	-	X	X	20 MM
22	14M7140	NUT	2	023198	-	X	X	M10
23	34M7119	SPRING PIN	2	023198	-	X	X	5 X 65 MM

(A) LEFT-HAND THREAD
PAS A GAUCHE
LINKSGEWINDE
FILETTO SINISTRORSO
ROSCA DE PASO IZQUIERDO
VANSTERGANGAD

COPYRIGHT©1994 - 2008 DEERE & COMPANY Moline, Illinois All rights reserved

(1E18) STARTING MOTOR
DEMARREUR
ANLASSER
MOTORINO AVVIAMENTO
MOTOR DE ARRANQUE
STARTMOTOR

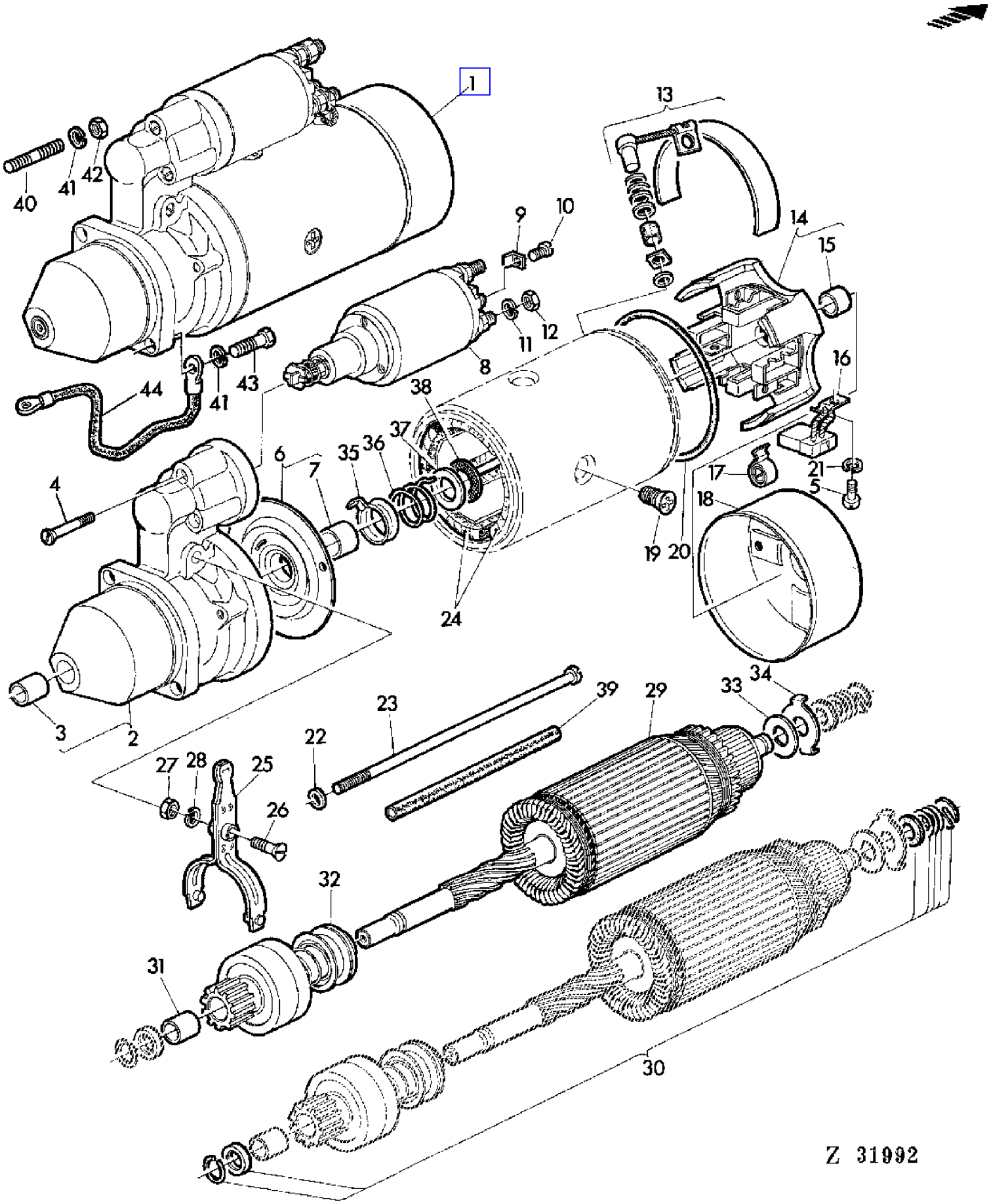

COPYRIGHT©1994 - 2008 DEERE & COMPANY Moline, Illinois All rights reserved

(1E18) STARTING MOTOR
DEMARREUR
ANLASSER
MOTORINO AVVIAMENTO
MOTOR DE ARRANQUE
STARTMOTOR

KEY	PART NO.	PART NAME	QTY	SERIAL NO.	975	975HY/4	REMARKS
1	AR70436	STARTER	1		X	X	ASSY, INCL KEYS 2-39 (JDR12V4PS) R.BOSCH-0 001 359 090 (ORD AL41247)
2	AL25266	HOUSING	1		X	X	INCL KEY 3
3	L19651	BUSHING	1		X	X	
4	L30860	SCREW	3		X	X	
5	21M7198	SCREW	AR		X	X	M5 X 8
6	AL25267	QUILL	1		X	X	INCL KEY 7
7	L30862	BUSHING	1		X	X	
8	AL25268	SOLENOID	1		X	X	
9	L29156	CLAMP	1		X	X	
10	21M1211	SCREW	1		X	X	M4 X 6
11	12M7013	LOCK WASHER	2		X	X	10 MM
12	14M7152	NUT	4		X	X	M10
13	AL25269	KIT	1		X	X	KIT
14	AL25270	COMMUTATOR HOUSING	1		X	X	INCL KEY 15
15	Z24799	BUSHING	1		X	X	
16	AL25271	CARBON BRUSH HOLDER	AR		X	X	KIT
17	Z24810	COMPRESSION SPRING	4		X	X	
18	L29158	COVER	1		X	X	
19	L29157	SCREW	AR		X	X	
20	Z24801	O-RING	1		X	X	
21	12M7011	LOCK WASHER	AR		X	X	5 MM
22	L30863	WASHER	2		X	X	
23	L29152	SCREW	2		X	X	
24	AL25272	FIELD WINDING COIL	1		X	X	
25	AL25273	LEVER	1		X	X	
26	T27671	SCREW	1		X	X	
27	14M7151	NUT	1		X	X	M8
28	12M7008	LOCK WASHER	1		X	X	8 MM
29	AL25274	ARMATURE	1		X	X	
30	AL23848	ARMATURE	1		X	X	
31	Z24800	BUSHING	1		X	X	
32	AL25275	DRIVE	1		X	X	
33	L30869	DISK	1		X	X	
34	L30868	THRUST WASHER	1		X	X	
35	L30864	GUIDE	1		X	X	
36	L30865	SPRING	1		X	X	
37	L30866	GUIDE	1		X	X	
38	L30867	BRAKE DISK	1		X	X	
39	L30861	PIPE	2		X	X	
40	M3636T	STUD	1		X	X	3/8" X 1-1/2"
41	12H304	LOCK WASHER	2		X	X	3/8"
42	14H812	NUT	1		X	X	3/8"

COPYRIGHT©1994 - 2008 DEERE & COMPANY Moline, Illinois All rights reserved

(1E18) STARTING MOTOR
DEMARREUR
ANLASSER
MOTORINO AVVIAMENTO
MOTOR DE ARRANQUE
STARTMOTOR

KEY	PART NO.	PART NAME	QTY	SERIAL NO.	975	975HY	REMARKS
43	19H1731	CAP SCREW	1		X	X	3/8" X 1"
44	AZ25669	CABLE	1		X	X	

COPYRIGHT©1994 - 2008 DEERE & COMPANY Moline, Illinois All rights reserved

(1E20) STARTING MOTOR
DEMARREUR
STARTER
AWIATORE ELETTRICO
MOTOR DE ARRANQUE
STARTMOTOR

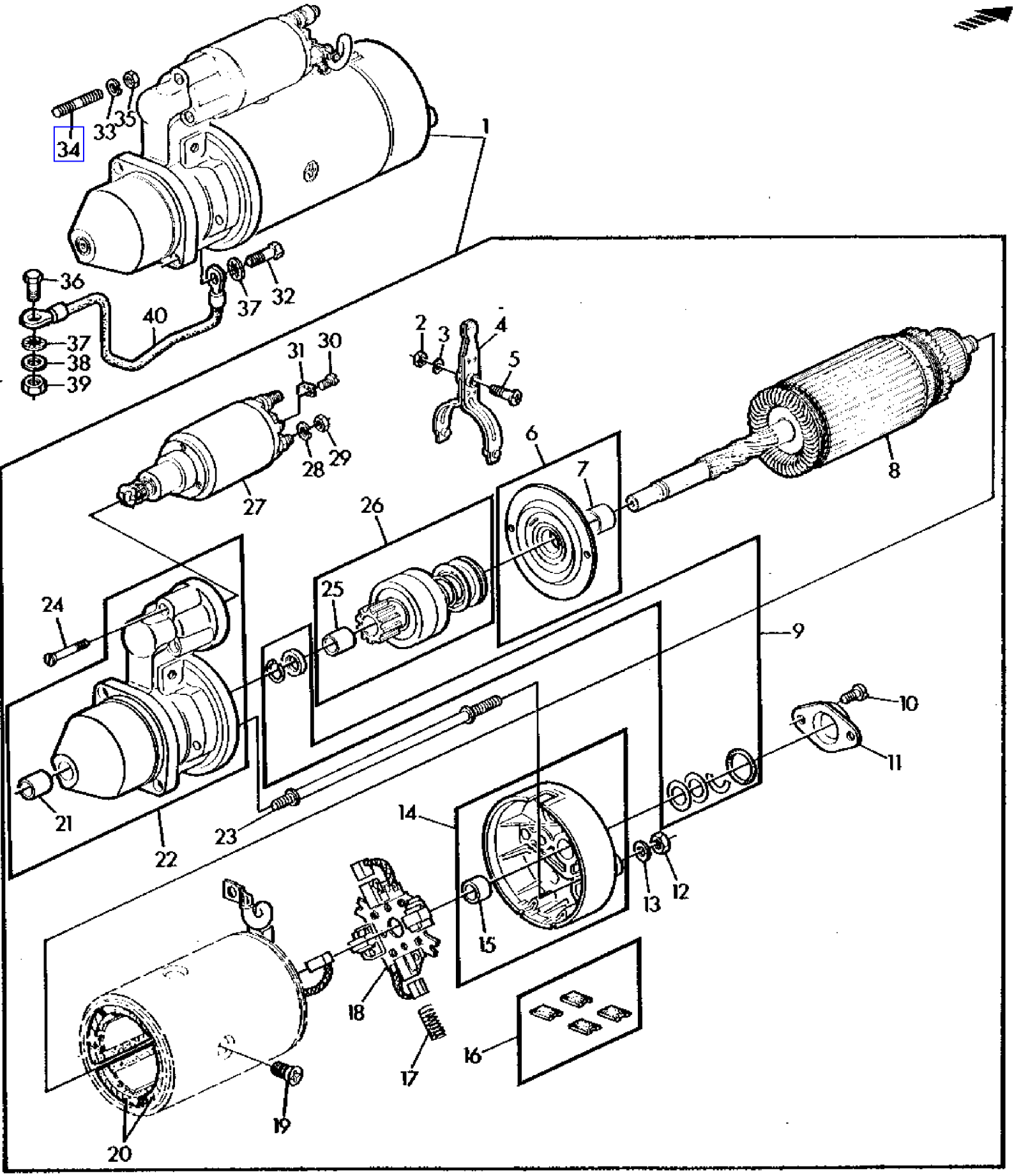

COPYRIGHT©1994 - 2008 DEERE & COMPANY Moline, Illinois All rights reserved

(1E20) STARTING MOTOR
DEMARREUR
STARTER
AWIATORE ELETTRICO
MOTOR DE ARRANQUE
STARTMOTOR

KEY	PART NO.	PART NAME	QTY	SERIAL NO.	9 7 5 9 H 7 Y 5 4	REMARKS
1	AL41247	STARTER	1		X X	R.BOSCH-0 001 362 312
2	14M7151	NUT	1		X X	M8
3	12M7008	LOCK WASHER	1		X X	M8
4	AL25273	LEVER	1		X X	
5	L41582	SCREW	1		X X	
6	AL25267	QUILL	1		X X	
7	L30862	BUSHING	1		X X	
8	AL55042	ARMATURE	1		X X	
9	AL41522	KIT	1		X X	
10	21M7271	SCREW	2		X X	M5 X 16
11	L42043	CAP	1		X X	
12	14M7272	NUT	2		X X	M6
13	24M7054	WASHER	2		X X	
14	AL41520	COMMUTATOR HOUSING	1		X X	
15	L41081	BUSHING	1		X X	
16	AL55047	CARBON BRUSH CONDUCTOR	1		X X	
17	L55066	COMPRESSION SPRING	4		X X	
18	AL55044	CARBON BRUSH HOLDER	1		X X	
19	L29157	SCREW	4		X X	
20	AL55043	FIELD WINDING COIL	1		X X	
21	L19651	BUSHING	1		X X	
22	AL41525	HOUSING	1		X X	
23	L55064	STUD	2		X X	
24	L30860	SCREW	3		X X	
25	Z24800	BUSHING	2		X X	
26	AL41626	BENDIX DRIVE	1		X X	
27	AL55046	SOLENOID	1		X X	
28	12M7013	LOCK WASHER	2		X X	10MM
29	14M7152	NUT	2		X X	M10
30	21M1211	SCREW	1		X X	M4 X 6
31	L29156	CLAMP	1		X X	
32	19H1731	CAP SCREW	1		X X	3/8" X 1"
33	12H304	LOCK WASHER	1		X X	3/8"
34	M3636T	STUD	1		X X	3/8" X 1-1/2"
35	14H812	NUT	1		X X	3/8"
36	19M7163	CAP SCREW	1		X X	M8 X 25
37	12M7113	LOCK WASHER	2		X X	10,5 MM
38	24M7036	WASHER	1		X X	9 MM
39	14M7014	NUT	1		X X	M8
40	AZ25669	CABLE	1		X X	

COPYRIGHT©1994 - 2008 DEERE & COMPANY Moline, Illinois All rights reserved

(3A17) STEERING COLUMN
COLONNE DE DIRECTION
LENKSAEULE
PIANTONE DI STERZO
COLUMNA DE DIRECCION
RATTKONSOLL

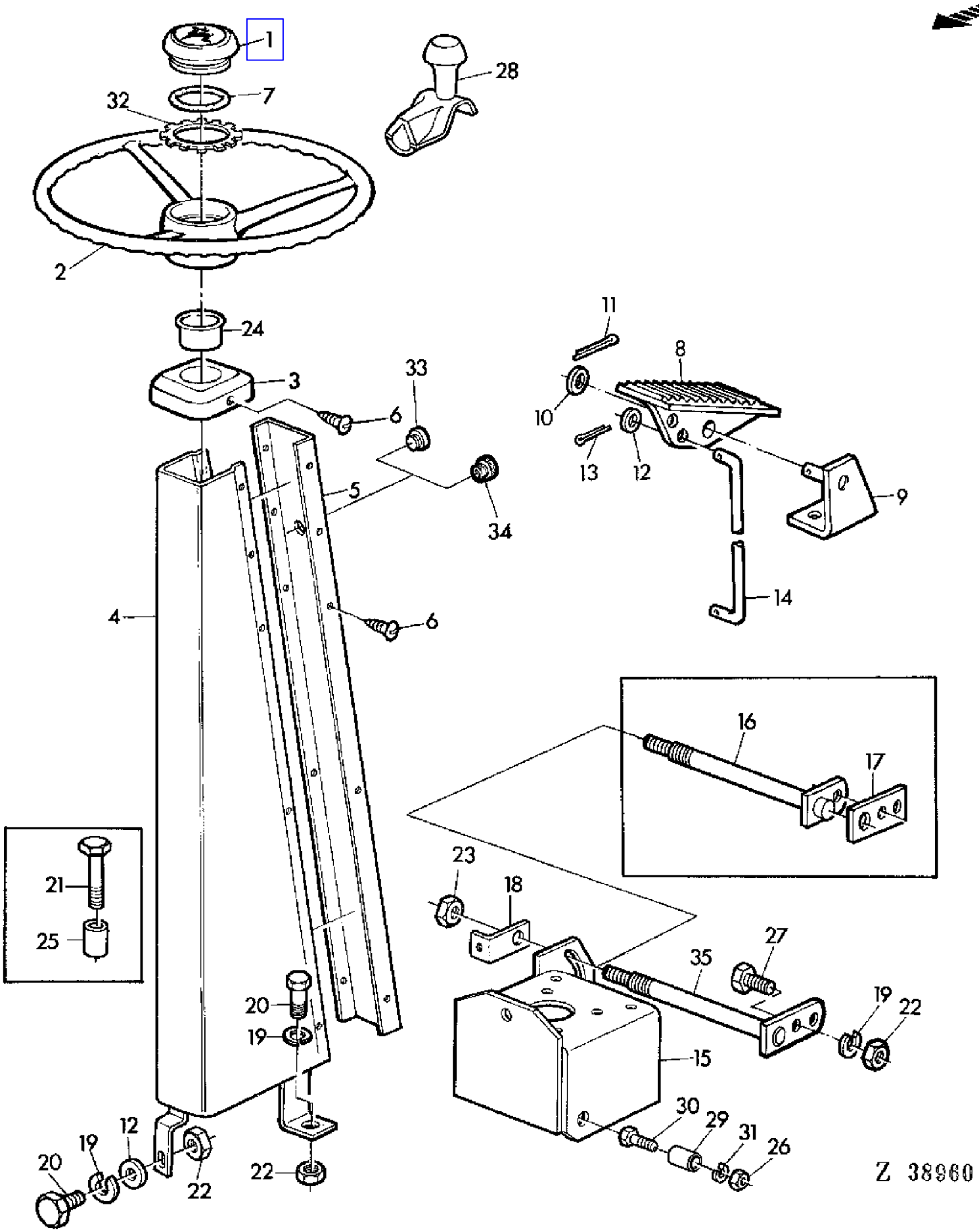

COPYRIGHT©1994 - 2008 DEERE & COMPANY Moline, Illinois All rights reserved

(3A17) STEERING COLUMN
COLONNE DE DIRECTION
LENKSAEULE
PIANTONE DI STERZO
COLUMNA DE DIRECCION
RATTKONSOLL

KEY	PART NO.	PART NAME	QTY	SERIAL NO.			975	975HY/4	REMARKS
1	AL36533	COVER	1				X	X	(SUB FOR R47998)
2	AL28457	STEERING WHEEL	1				X	X	
3	Z29759	GUIDE	1		-	019970	X	X	
	Z38823	CAP	1	019971	-		X	X	
4	AZ18428	SHEET	1				X	X	FRONT
5	Z29866	SHEET	1		-	XXXX	X	X	REAR (ORD Z34506, Z41539)
	Z41539	SHEET	1	XXXX	-		X	X	REAR
6	37M7011	SCREW	AR				X	X	4,8 X 9,5 MM
7	B3690R	O-RING	1				X	X	
8	Z11279	PEDAL	1				X	X	(SUB FOR Z10665)
9	AZ18424	RETAINER	1				X	X	
10	24M7085	WASHER	1				X	X	15 MM
11	11M7020	COTTER PIN	1				X	X	4 X 25 MM
12	24M7055	WASHER	2				X	X	8,4 MM
13	11M7011	COTTER PIN	2				X	X	3 X 15 MM
14	Z29753	BAIL	1		-	026722	X	X	
	Z39401	BAIL	1	026723	-		X	X	
15	AZ18426	BRACKET	1		-	026722	X	X	DANFOSS
	AZ28873	TUBE	1	026723	-		X	X	
16	AZ18422	PIN	1		-	XXXX	X	X	
17	Z29752	PLATE	1		-	XXXX	X	X	
18	Z38106	LOCK PLATE	1		-	026722	X	X	
	Z39402	LOCK PLATE	1	026723	-		X	X	
19	12M7008	LOCK WASHER	4				X	X	8 MM
20	19M7139	CAP SCREW	1				X	X	M8 X 20
21	19M7184	CAP SCREW	3				X	X	M8 X 55
22	14M7029	NUT	3				X	X	M8
23	14M7146	NUT	1				X	X	M12
24	Z31192	BUSHING	1				X	X	
25	Z29745	SPACER	2				X	X	
26	14M7140	NUT	2				X	X	M10
27	19M7163	CAP SCREW	1				X	X	M8 X 25
28	AZ24318	HANDLE	1				X	X	
29	Z32649	SPACER	2				X	X	12 MM
30	19M7167	CAP SCREW	2				X	X	M10 X 25
31	12M7013	LOCK WASHER	2				X	X	10 MM
32	R71650	WASHER	1				X	X	
33	Z34506	GROMMET	1	XXXX	-		X	X	
34	Z41514	PLUG	1	XXXX	-		X	X	
35	AZ31228	PIVOT	1	XXXX	-		X	X	

COPYRIGHT©1994 - 2008 DEERE & COMPANY Moline, Illinois All rights reserved

(2C16) STEERING CYLINDER
VERIN DE DIRECTION
LENKZYLINDER
CILINDRO DI STERZO
CILINDRO DE DIRECCION
STYRCYLINDER

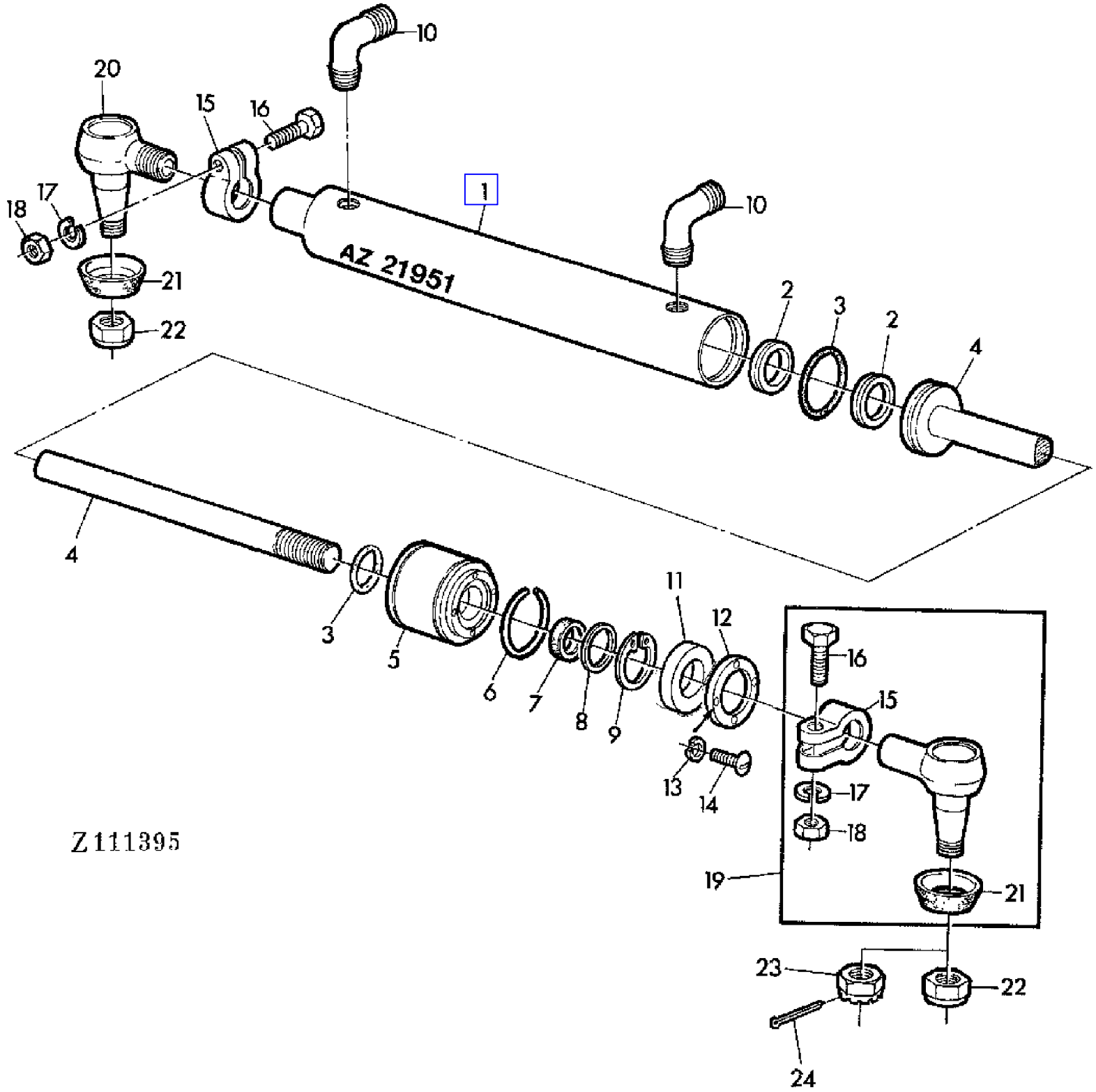

COPYRIGHT©1994 - 2008 DEERE & COMPANY Moline, Illinois All rights reserved

(2C16) STEERING CYLINDER
VERIN DE DIRECTION
LENKZYLINDER
CILINDRO DI STERZO
CILINDRO DE DIRECCION
STYRCYLINDER

KEY	PART NO.	PART NAME	QTY	SERIAL NO.	975	975HY/4	REMARKS
1	AZ21953	HYDRAULIC CYLINDER BARREL	1	- 023197	X	X	(ORD AZ16232)
2	.....	BACK-UP RING	2	- 023197	X	X	(ORD AZ37852) (SUB FOR Z32936)
3	.....	O-RING	2	- 023197	X	X	(ORD AZ37852)
4	AZ21952	ROD	1	- 023197	X	X	(ORD AZ16232)
5	Z32935	GUIDE	1	- 023197	X	X	(ORD AZ16232)
6	Z32937	SNAP RING	1	- 023197	X	X	
7	.....	SEAL	1	- 023197	X	X	(ORD AZ37852)
8	.....	DISK	1	- 023197	X	X	(ORD AZ37852)
9	Z32934	SNAP RING	1	- 023197	X	X	
10	Z32988	ELBOW FITTING	2	- 023197	X	X	
11	.....	SEAL	1	- 023197	X	X	(ORD AZ37852)
12	Z32931	FLANGE	1	- 023197	X	X	
13	12H295	LOCK WASHER	4	- 023197	X	X	
14	21H1301	SCREW	4	- 023197	X	X	0.190" X 1/2"
15	M2300T	CLAMP	2	- 023197	X	X	
16	19H1765	CAP SCREW	2	- 023197	X	X	3/8"X1-3/4"
17	12H304	LOCK WASHER	2	- 023197	X	X	3/8"
18	14H812	NUT	2	- 023197	X	X	3/8"
19	AH75396	TIE ROD END	1	- 023197	X	X	(ORD AZ35296 W/ 11M7024, 14M5408)
	AZ35296	BALL JOINT	1	- 023197	X	X	(SUB FOR AH75396 APPL)
20	AH75397	TIE ROD END	1	- 023197	X	X	INCL KEY 21
21	H35664	BOOT	AR	- 023197	X	X	
22	CM10111	LOCK NUT	AR	- 023197	X	X	
23	14M5408	NUT	1	- 023197	X	X	M18 X 1,5 (FOR AZ35296)
24	11M7024	COTTER PIN	1	- 023197	X	X	4 X 36 MM
..	AZ37852	GASKET KIT	1	- 023197	X	X	KIT, INCL KEYS 2,3,7,8,11 (FOR AZ21951)

COPYRIGHT©1994 - 2008 DEERE & COMPANY Moline, Illinois All rights reserved

(2C17) STEERING CYLINDER
VERIN DE DIRECTION
LENKZYLINDER
CILINDRO DI STERZO
CILINDRO DE DIRECCION
STYRCYLINDER

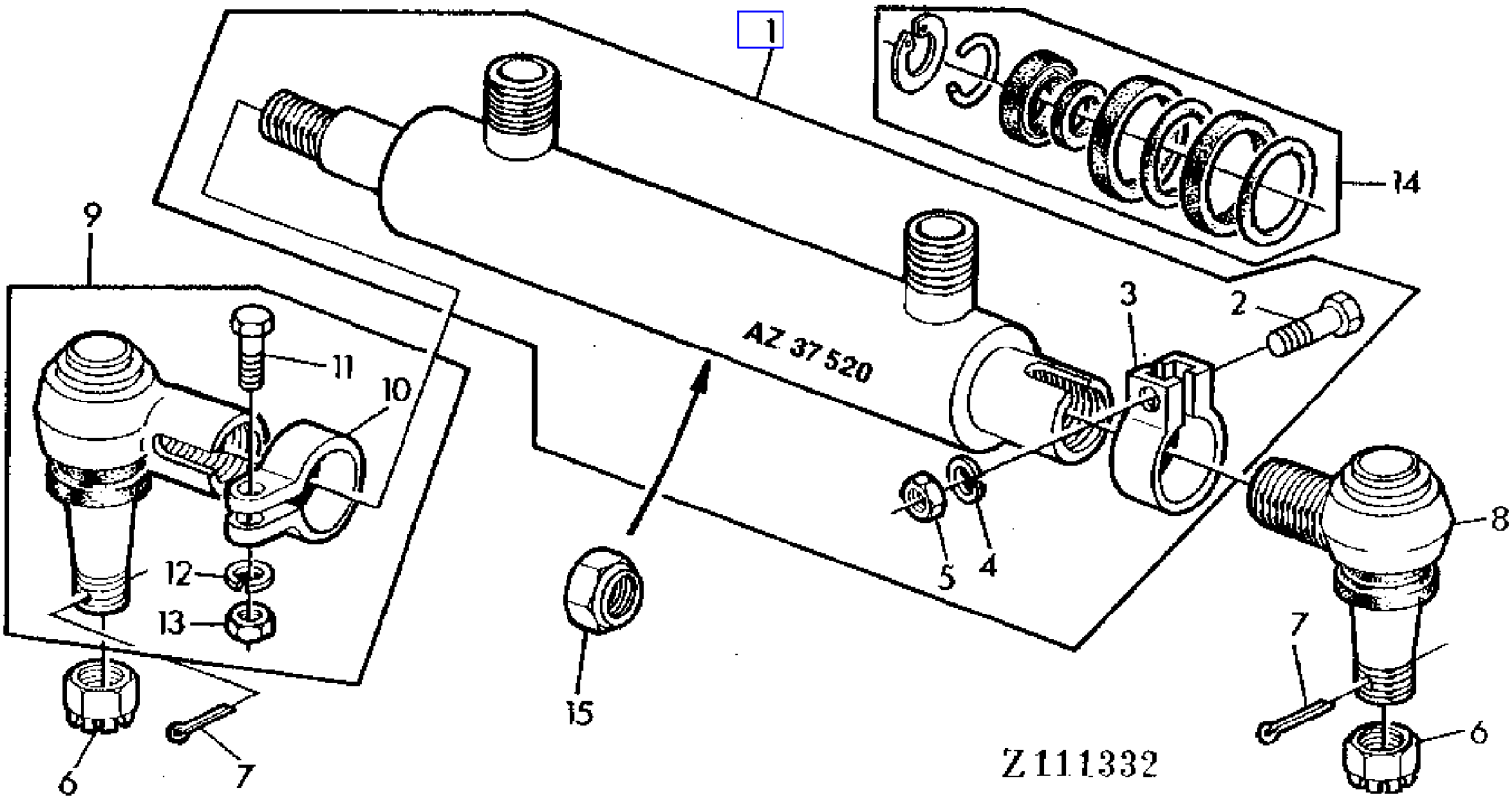

COPYRIGHT©1994 - 2008 DEERE & COMPANY Moline, Illinois All rights reserved

(2C17) STEERING CYLINDER
VERIN DE DIRECTION
LENKZYLINDER
CILINDRO DI STERZO
CILINDRO DE DIRECCION
STYRCYLINDER

KEY	PART NO.	PART NAME	QTY	SERIAL NO.		975	975HY/4	REMARKS
1	AZ37520	HYDRAULIC CYLINDER	1	023198	-	X	X	(SUB FOR AR90985)
2	19M2930	CAP SCREW	1	023198	-	X	X	M16 X 65
3	Z48022	CLAMP	1	023198	-	X	X	
4	12M7069	LOCK WASHER	1	023198	-	X	X	16 MM
5	14M7286	NUT	1	023198	-	X	X	M16
6	14M5408	NUT	2	023198	-	X	X	M18 X 1,5
7	11M7024	COTTER PIN	2	023198	-	X	X	4 X 36 MM
8	AZ28775	BALL JOINT	1	023198	-	X	X	
9	AZ28776	BALL JOINT	1	023198	-	X	X	
10	Z39348	CLAMP	1	023198	-	X	X	
11	19M7287	CAP SCREW	1	023198	-	X	X	M10 X 50
12	12M7013	LOCK WASHER	1	023198	-	X	X	10 MM
13	14M7140	NUT	1	023198	-	X	X	M10
14	AZ37844	SEAL KIT	1	023198	-	X	X	KIT (FOR AZ37520)
15	Z47519	LOCK NUT	1	023198	-	X	X	

COPYRIGHT©1994 - 2008 DEERE & COMPANY Moline, Illinois All rights reserved

(2C18) STEERING CYLINDER
VERIN DE DIRECTION
LENKZYLINDER
CILINDRO DI STERZO
CILINDRO DE DIRECCION
STYRCYLINDER

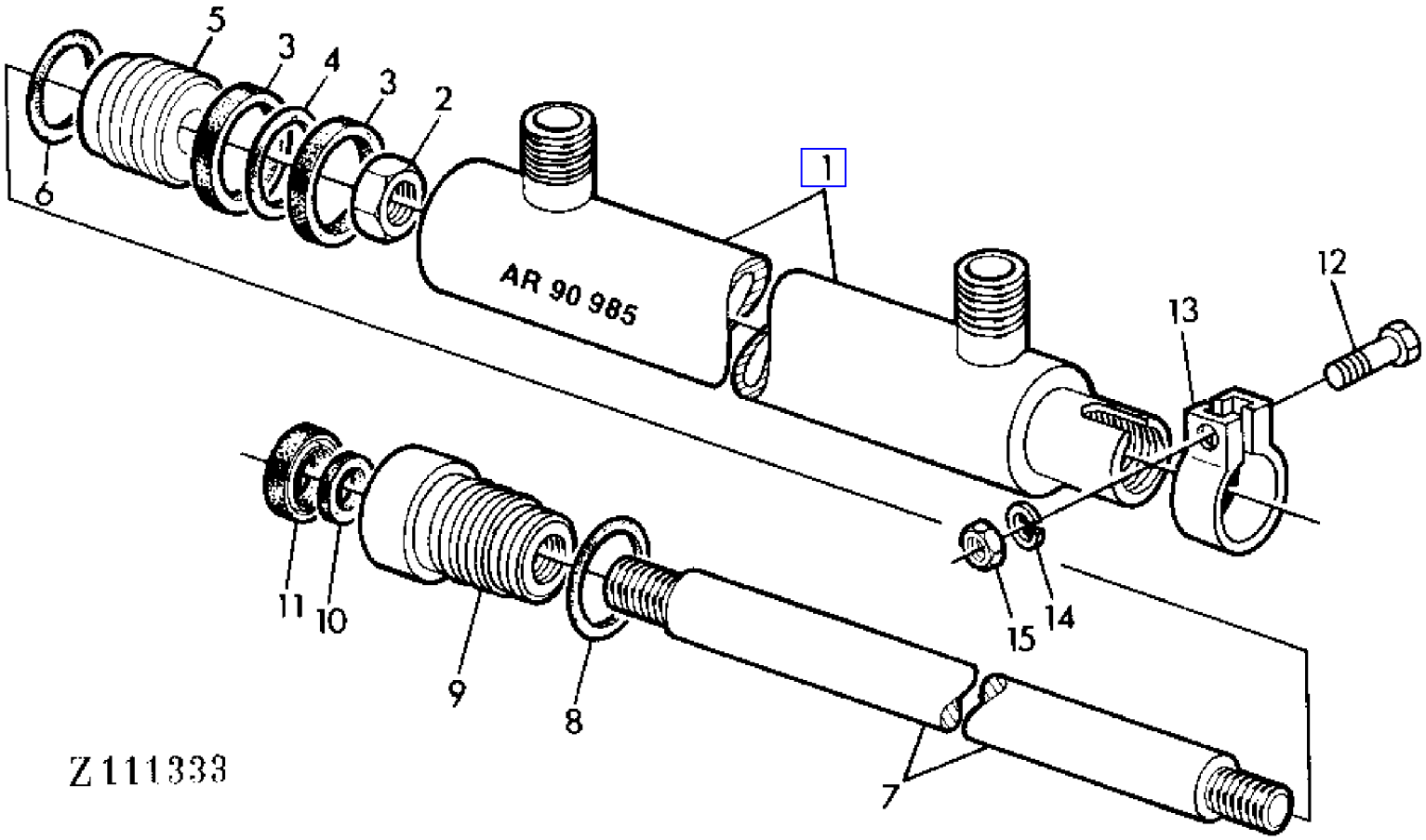

COPYRIGHT©1994 - 2008 DEERE & COMPANY Moline, Illinois All rights reserved

(2C18) STEERING CYLINDER
VERIN DE DIRECTION
LENKZYLINDER
CILINDRO DI STERZO
CILINDRO DE DIRECCION
STYRCYLINDER

KEY	PART NO.	PART NAME	QTY	SERIAL NO.		975	975HY/4	REMARKS
1	.....	HYDRAULIC CYLINDER BARREL	1	023198	-	X	X	NSEP (ORD AZ37520)
2	R69706	LOCK NUT	1	023198	-	X	X	
3	.....	BACK-UP RING	2	023198	-	X	X	(ORD AZ37833)
4	.....	O-RING	1	023198	-	X	X	(ORD AZ37833)
5	.....	PISTON	1	023198	-	X	X	(ORD AZ37520)
6	.....	RING	1	023198	-	X	X	(ORD AZ37833)
7	.....	ROD	1	023198	-	X	X	(ORD AZ37520)
8	.....	O-RING	1	023198	-	X	X	(ORD AZ37833)
9	.....	HYDR. CYLINDER ROD GUIDE	1	023198	-	X	X	(ORD AZ37520)
10	.....	SEAL	1	023198	-	X	X	(ORD AZ37833)
11	.....	SCRAPER RING	1	023198	-	X	X	(ORD AZ37833)
12	19M2930	CAP SCREW	1	023198	-	X	X	M16 X 65
13	R66307	CLAMP	1	023198	-	X	X	
14	12M7069	LOCK WASHER	1	023198	-	X	X	16 MM
15	14M7286	NUT	1	023198	-	X	X	M16
..	AR90985	HYDRAULIC CYLINDER	1	023198	-	X	X	(ORD AZ37520)
..	AZ37833	GASKET KIT	1	023198	-	X	X	KIT, INCL KEYS (2) 3,4,6,8,10 11 (FOR AR90985)

COPYRIGHT©1994 - 2008 DEERE & COMPANY Moline, Illinois All rights reserved

(2E08) STEERING CYLINDER
VERIN DE DIRECTION
LENKZYLINDER
CILINDRO DI STERZO
CILINDRO DE DIRECCION HIDRAULICA
STYRCYLINDER

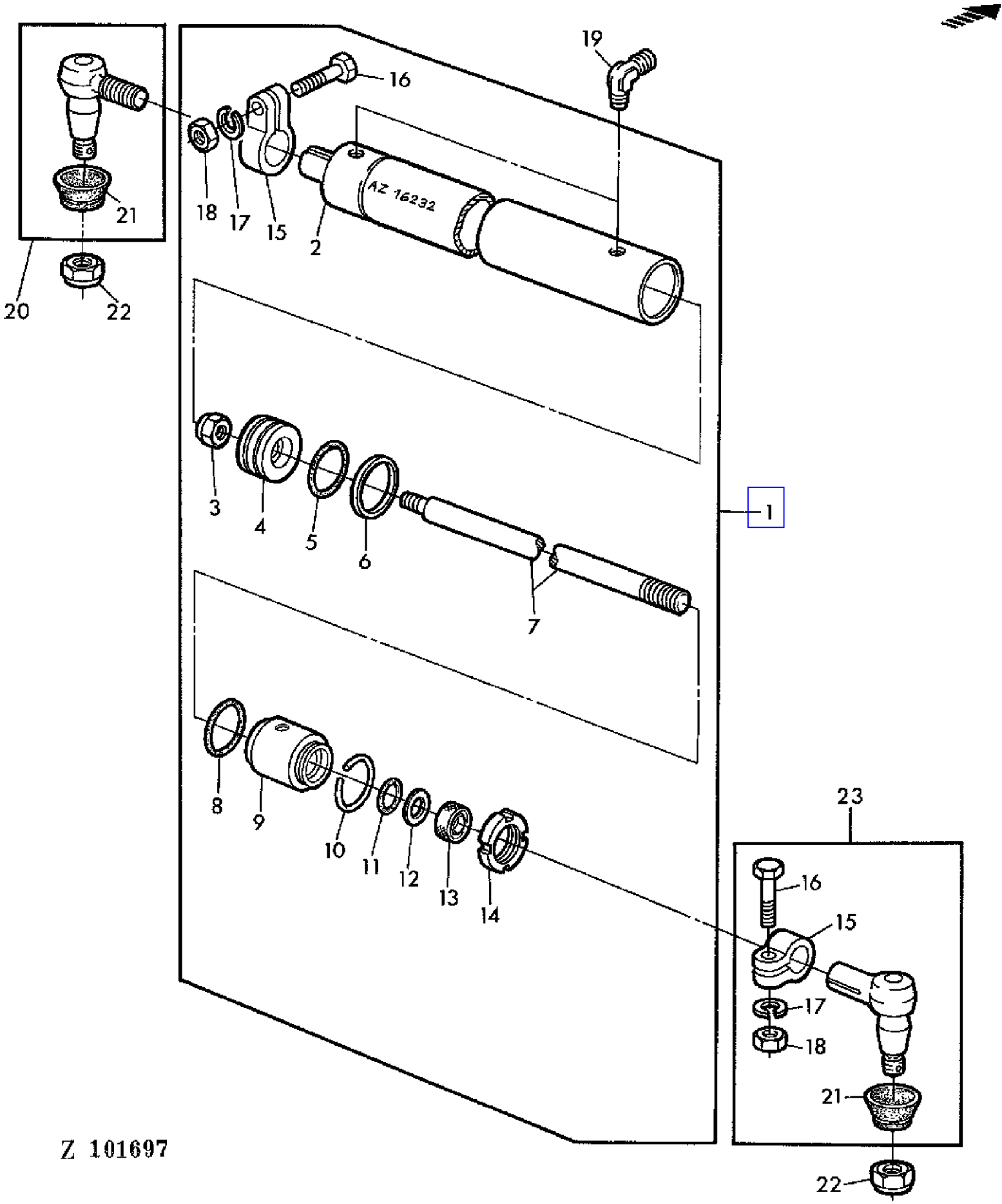

COPYRIGHT©1994 - 2008 DEERE & COMPANY Moline, Illinois All rights reserved

(2E08) STEERING CYLINDER
VERIN DE DIRECTION
LENKZYLINDER
CILINDRO DI STERZO
CILINDRO DE DIRECCION HIDRAULICA
STYRCYLINDER

KEY	PART NO.	PART NAME	QTY	SERIAL NO.	975	975HY/4	REMARKS
1	AZ16232	HYDRAULIC CYLINDER	1		X	X	INCL KEYS 2-14,15,16,17,18 (SUB FOR AZ21951)
2	.....	HYDRAULIC CYLINDER BARREL	1		X	X	NSEP (ORD AZ16232)
3	Z27690	NUT	1		X	X	
4	.....	PISTON	1		X	X	NSEP (ORD AZ16232)
5	.....	O-RING	2		X	X	(ORD AZ37853)
6	.....	BACK-UP RING	2		X	X	(ORD AZ37853)
7	.....	ROD	1		X	X	NSEP (ORD AZ16232)
8	.....	O-RING	1		X	X	(ORD AZ37853)
9	.....	HYDR. CYLINDER ROD GUIDE	1		X	X	NSEP (ORD AZ16232)
10	.....	SNAP RING	1		X	X	(ORD AZ37853)
11	.....	O-RING	1		X	X	(ORD AZ37853)
12	.....	RING	1		X	X	(ORD AZ37853)
13	.....	SNAP RING	1		X	X	(ORD AZ37853)
14	Z27691	NUT	1		X	X	
15	M2300T	CLAMP	2		X	X	
16	19H1765	CAP SCREW	2		X	X	3/8" X 1-3/4"
17	12H304	LOCK WASHER	2		X	X	3/8"
18	14H812	NUT	2		X	X	3/8"
19	Z32988	ELBOW FITTING	2		X	X	
20	AH75397	TIE ROD END	1		X	X	INCL KEY 21
21	H35664	BOOT	2		X	X	
22	CM10111	LOCK NUT	2		X	X	
23	AH75396	TIE ROD END	1		X	X	INCL KEYS 15-18,21
..	AZ37853	GASKET KIT	1		X	X	KIT, INCL KEYS 5,6,8,10-13 (FOR AZ16232)

COPYRIGHT©1994 - 2008 DEERE & COMPANY Moline, Illinois All rights reserved

(2B22) STEERING SHAFT
ARBRE DE DIRECTION
LENKWELLE
ALBERO STERZO
EJE DE DIRECCION
STYRPUMPAXEL

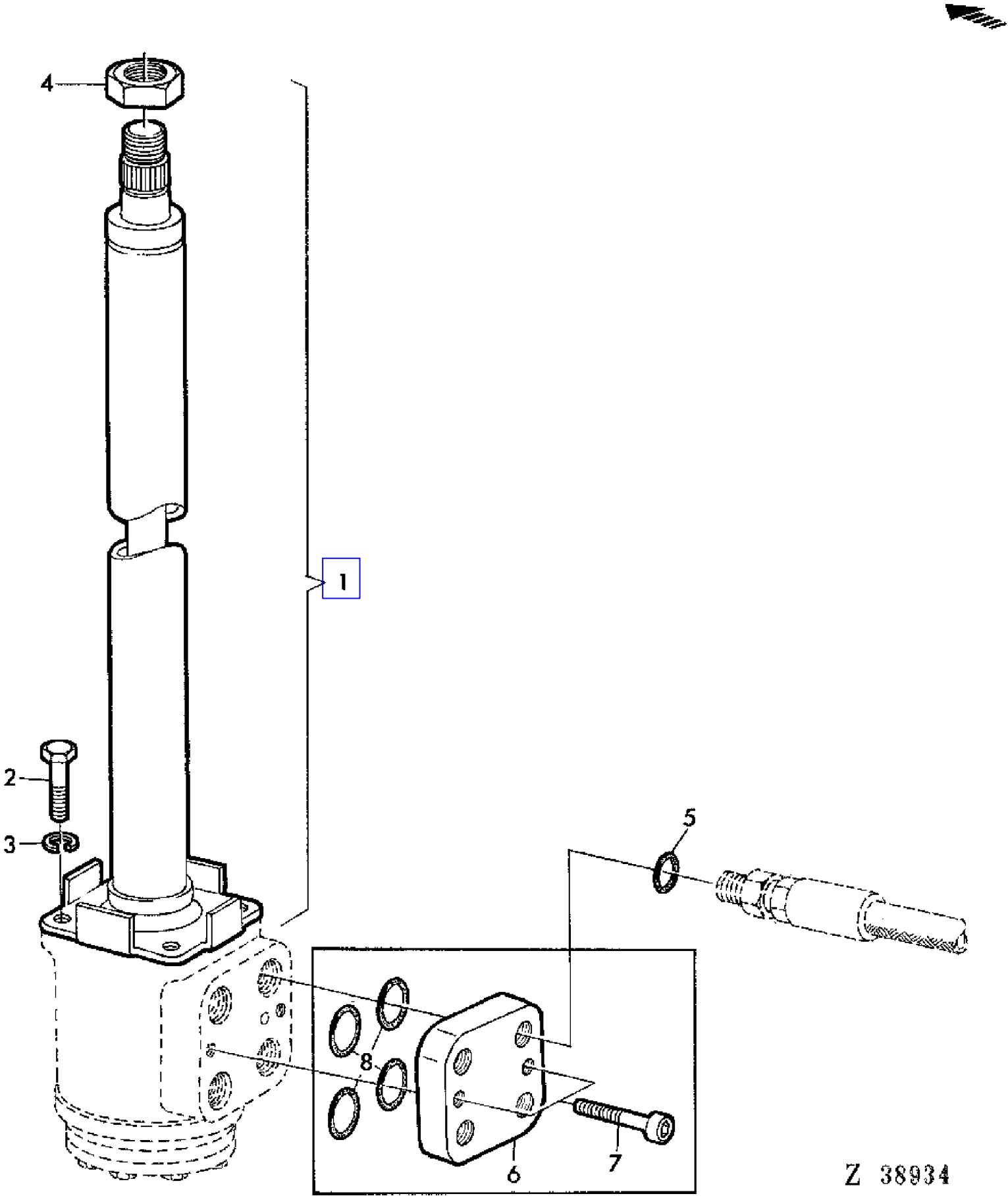

COPYRIGHT©1994 - 2008 DEERE & COMPANY Moline, Illinois All rights reserved

(2B22) STEERING SHAFT
ARBRE DE DIRECTION
LENKWELLE
ALBERO STERZO
EJE DE DIRECCION
STYRPUMPAXEL

KEY	PART NO.	PART NAME	QTY	SERIAL NO.		975	975HY/4	REMARKS
1	AZ20004	DRAG LINK	1		- 019970	X	X	INCL KEY 4 (ORD AZ28129, Z38823)
	AZ28129	STEERING COLUMN	1	019971	-	X	X	
2	19H1800	CAP SCREW	4			X	X	3/8" X 1-1/2"
3	12M7013	LOCK WASHER	4			X	X	10 MM
4	14M7209	NUT	AR			X	X	(W DANFOSS OTB 750-1505042) M18 X 1,5
5	R26375	O-RING	4			X	X	(SUB FOR Z22678)
6	AZ24577	VALVE STACK	1		- 005864	X		INCL KEYS 10,8
7	19M7661	SCREW	2		- 005864	X		M10 X 1 X 40
8	32240	O-RING	4		- 005864	X		

COPYRIGHT©1994 - 2008 DEERE & COMPANY Moline, Illinois All rights reserved

(4A13) STONE TRAP
TRAPPE A PIERRES
STEINFANGMULDE
PARASASSI
ATRAPAPIEDRAS
STENFICKA

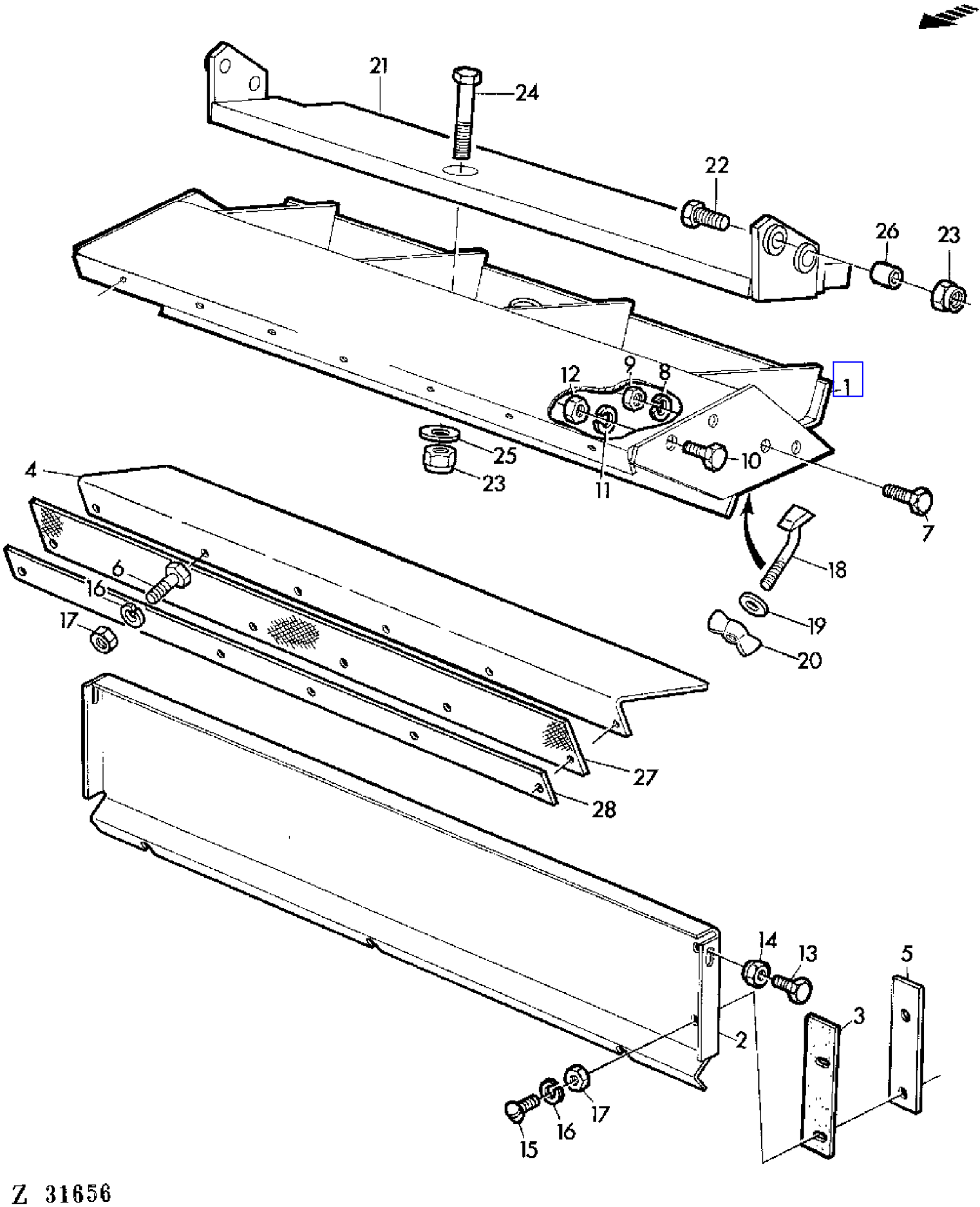

COPYRIGHT©1994 - 2008 DEERE & COMPANY Moline, Illinois All rights reserved

(4A13) STONE TRAP
TRAPPE A PIERRES
STEINFANGMULDE
PARASASSI
ATRAPAPIEDRAS
STENFICKA

KEY	PART NO.	PART NAME	QTY	SERIAL NO.	975	975HY/4	REMARKS
1	AZ31766	TROUGH	1		X	X	(SUB FOR AZ23125)
2	Z34483	SHEET	1		X	X	
3	Z34661	GASKET	1		X	X	
4	Z37901	SHEET	1	010732 - 026722	X	X	
5	Z35852	PLATE	1		X	X	
6	19M7286	CAP SCREW	AR		X	X	M6 X 25
7	19M7167	CAP SCREW	AR		X	X	M10 X 25
8	12M7013	LOCK WASHER	AR		X	X	10 MM
9	14M7140	NUT	AR		X	X	M10
10	19M7285	CAP SCREW	AR		X	X	M12 X 30
11	12M7014	LOCK WASHER	AR		X	X	12 MM
12	14M7031	NUT	AR		X	X	M12
13	19M7166	CAP SCREW	AR		X	X	M10 X 20
14	14M7167	LOCK NUT	AR		X	X	M10
15	21M7031	SCREW	AR		X	X	M6 X 15
16	12M7012	LOCK WASHER	AR		X	X	6 MM
17	14M7027	NUT	AR		X	X	M6
18	Z35160	HOOK BOLT	3		X	X	
19	24M7036	WASHER	3		X	X	9 MM
20	Z20285	WING NUT	3		X	X	
21	AZ23515	COVER	1		X	X	
22	19M7330	CAP SCREW	4		X	X	M12 X 55
23	14M7168	LOCK NUT	AR		X	X	M12
24	19M7331	CAP SCREW	2		X	X	M12 X 65
25	24M7047	WASHER	AR		X	X	13 MM
26	Z38274	SPACER	4		X	X	
27	Z38631	BOOT	1	- 025572	X	X	(A)
	Z38631	BOOT	1	- 026722	X	X	
	Z22779	GASKET	1	025573 -	X	X	(A)
28	Z22768	STRIPPER	1		X	X	

(A) FOR FEEDER CONVEYOR LONG
POUR CONVOYEUR D'ALIMENTATION LONG
FUER LANGEN SCHRAEGFOERDERER
PER COLLO ALIMENTATORE LUNGO
PARA ELEVADOR DE MIES LARGO
FOR LANG INMATNINGSELEVATOR

COPYRIGHT©1994 - 2008 DEERE & COMPANY Moline, Illinois All rights reserved

(2F04) STRAW COVER FOR CROSS SHAKER
CAPOT DU SECOUEUR ROTATIF
STROHHAUBE FUER QUERSCHUETTLER
COPERCHIO DELLO SCUOTITORE INCROCIATO
CAPO DEL SACUDIDOR TRANSVERSAL
STRASKYDD FOR TVARSKAKARE

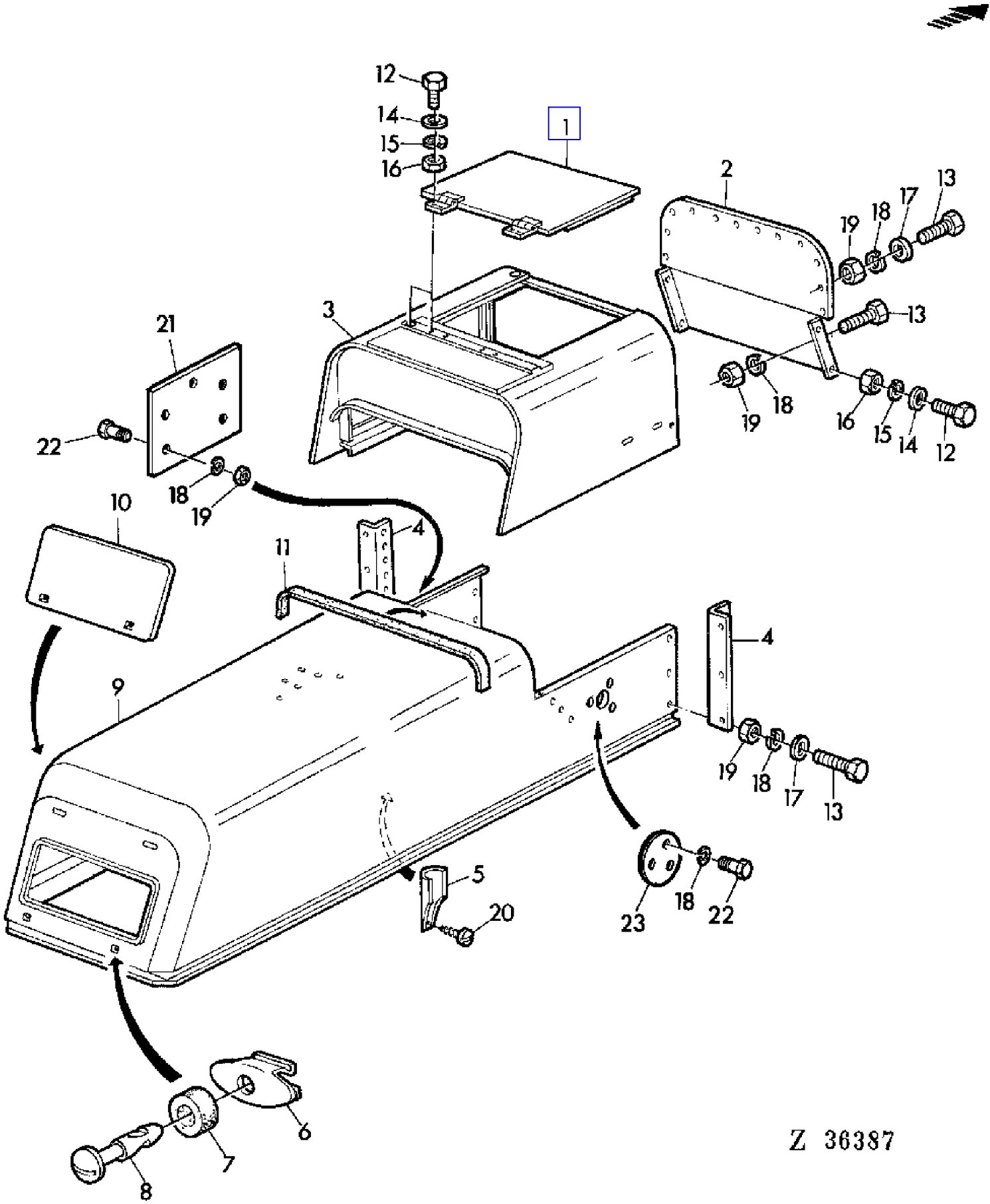

COPYRIGHT©1994 - 2008 DEERE & COMPANY Moline, Illinois All rights reserved

(2F04) STRAW COVER FOR CROSS SHAKER
CAPOT DU SECOUEUR ROTATIF
STROHHAUBE FUER QUERSCHUETTLER
COPERCHIO DELLO SCUOTITORE INCROCIATO
CAPO DEL SACUDIDOR TRANSVERSAL
STRASKYDD FOR TVARSKAKARE

KEY	PART NO.	PART NAME	QTY	SERIAL NO.	975	975HY	REMARKS
1	AZ22486	COVER	1		X	X	
2	Z33304	PANEL	1		X	X	
3	AZ25922	HOOD	1		X	X	(SUB FOR AZ22484)
4	Z33604	ANGLE	2		X	X	
5	Z33433	GUARD	1		X	X	
6	Z34332	LATCH	2		X	X	
7	Z34333	GROMMET	2		X	X	
8	Z34331	LATCH	2		X	X	
9	AZ22587	HOOD	1	- 026422	X	X	
	AZ24941	HOOD	1	026423 -	X	X	
10	AZ23016	COVER	2		X	X	
11	Z34337	WEATHERSTRIP	1		X	X	
12	19M7375	CAP SCREW	AR		X	X	M6 X 18
13	19M7139	CAP SCREW	AR		X	X	M8 X 20
14	Z26250	WASHER	AR		X	X	6,5 MM
15	12M7012	LOCK WASHER	AR		X	X	6 MM
16	14M7027	NUT	AR		X	X	M6
17	24M7036	WASHER	AR		X	X	9 MM
18	12M7008	LOCK WASHER	AR		X	X	8 MM
19	14M7029	NUT	AR		X	X	M8
20	37M7029	SCREW	AR		X	X	5,5 X 13 MM
21	Z40446	COVER	1		X	X	AR
22	19M7162	CAP SCREW	AR		X	X	M8 X 16
23	Z40445	COVER	1		X	X	AR

COPYRIGHT©1994 - 2008 DEERE & COMPANY Moline, Illinois All rights reserved

(4G24) STRAW SPREADER BLADES
EPARPILLEUR DE PAILLE,PALETTES
STROH-STREUER SCHLAEGER
LANCIA-PAGLIA,ELEMENTO LANCIATORE
ESPARCIDOR DE PAJA,MAYALES
HALMSPRIDARENS BLAD

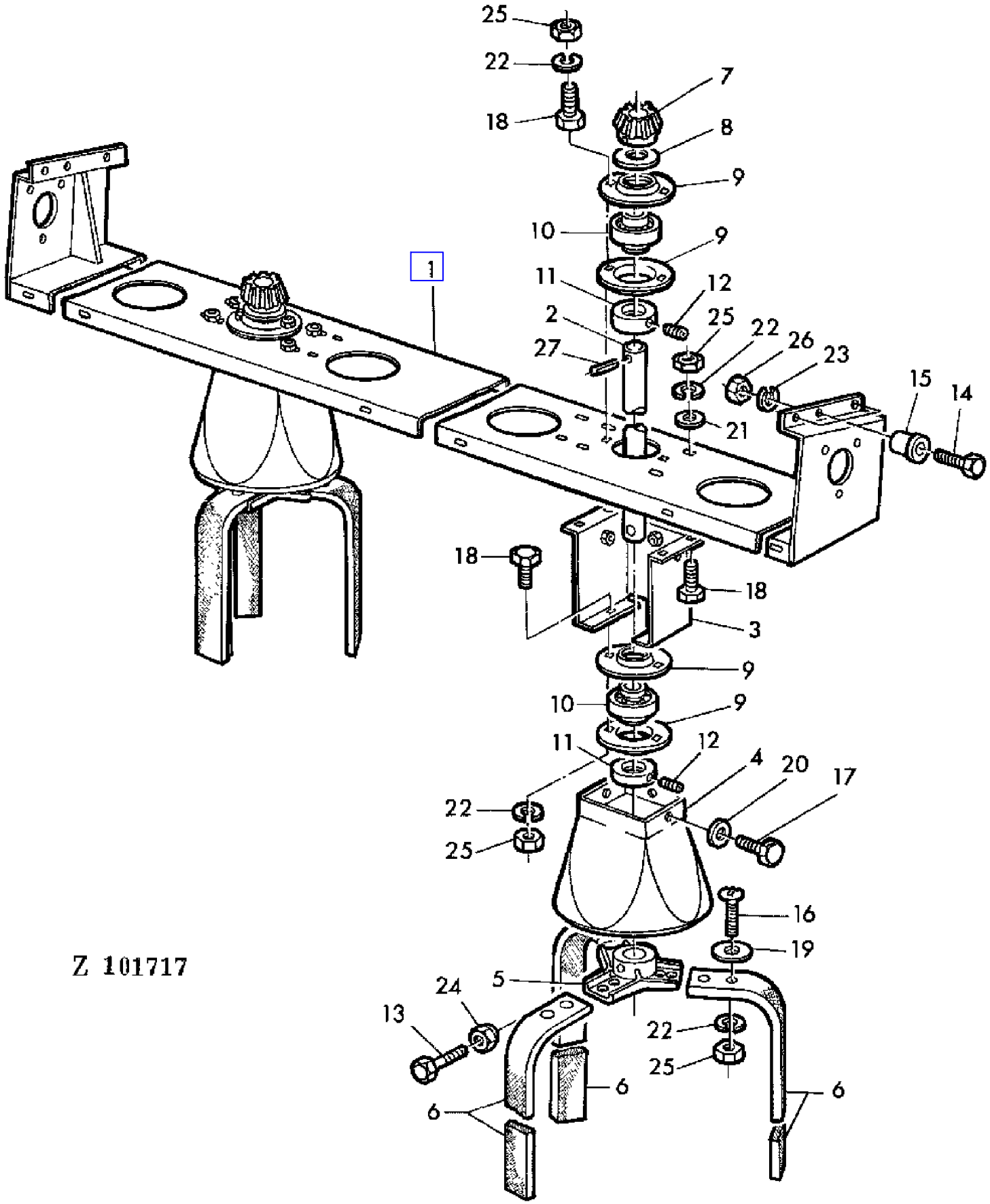

COPYRIGHT©1994 - 2008 DEERE & COMPANY Moline, Illinois All rights reserved

(4G24) STRAW SPREADER BLADES
EPARPILLEUR DE PAILLE,PALETTES
STROH-STREUER SCHLAEGER
LANCIA-PAGLIA,ELEMENTO LANCIATORE
ESPARCIDOR DE PAJA,MAYALES
HALMSPRIDARENS BLAD

KEY	PART NO.	PART NAME	QTY	SERIAL NO.	975	975HY/4	REMARKS
1	AZ23909	BRACKET	1		X	X	
2	H83793	SHAFT	2		X	X	
3	AZ22696	RETAINER	2		X	X	
4	H83795	GUARD	2		X	X	
5	H84934	SPIDER	2		X	X	
6	H76933	BLADE	6		X	X	
7	H91228	GEAR	2		X	X	(SUB FOR H85869)
8	24H1433	WASHER	2		X	X	29/32" X 2-1/4" X .250"
9	P44439	PRESSED FLANGED HOUSING	8		X	X	
10	JD9442	BALL BEARING	4		X	X	
11	JD8563	ECCENTRIC LOCKING COLLAR	4		X	X	INCL KEY 12
12	AZ19843	SET SCREW	4		X	X	KIT
13	19M7269	CAP SCREW	2		X	X	M8 X 50
14	19M7287	CAP SCREW	AR		X	X	M10 X 50
15	Z29770	SPACER	AR		X	X	
16	21M7126	SCREW	AR		X	X	M8 X 35
17	19M7159	CAP SCREW	AR		X	X	M6 X 16
18	19M7139	CAP SCREW	AR		X	X	M8 X 20
19	24M7024	WASHER	AR		X	X	R = 9,5 MM
20	Z26250	WASHER	AR		X	X	6,5 MM X 16 X 1,5 MM
21	24M7036	WASHER	AR		X	X	9 MM
22	12M7008	LOCK WASHER	AR		X	X	8 MM
23	12M7013	LOCK WASHER	AR		X	X	10 MM
24	14M7166	LOCK NUT	AR		X	X	M8
25	14M7029	NUT	AR		X	X	M8
26	14M7140	NUT	AR		X	X	M10
27	34M7046	SPRING PIN	AR		X	X	8 X 36 MM

COPYRIGHT©1994 - 2008 DEERE & COMPANY Moline, Illinois All rights reserved

(4G22) STRAW SPREADER DRIVE I
EPARPILLEUR DE PAILLE,ENTRAINEMENT I
STROH-STREUER-ANTRIEB I
LANCIA-PAGLIA,COMANDO I
ESPARCIDOR DE PAJA,TRANSMISION I
HALMSPRIDARENS DRIVNING I

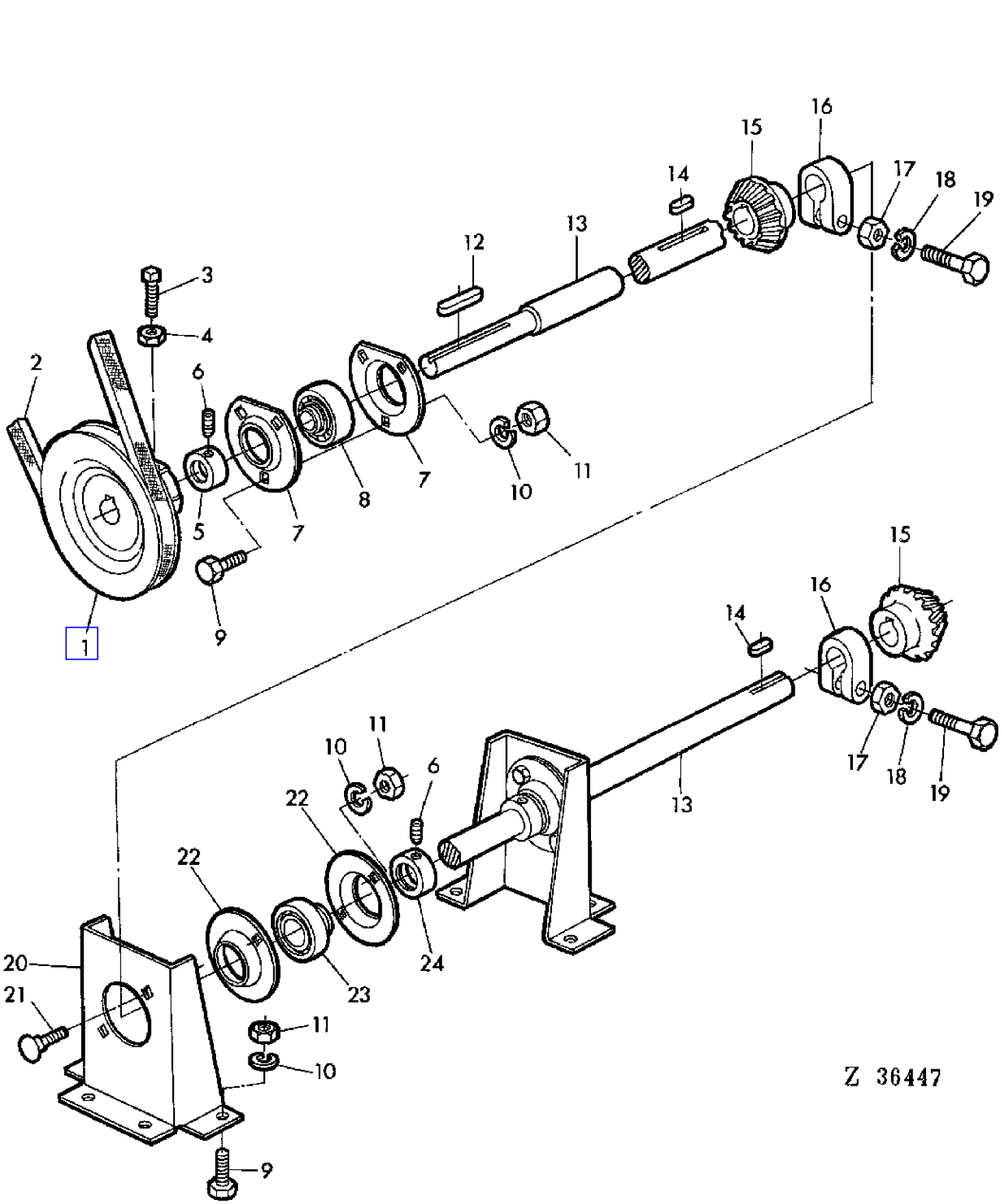

COPYRIGHT©1994 - 2008 DEERE & COMPANY Moline, Illinois All rights reserved

(4G22) STRAW SPREADER DRIVE I
EPARPILLEUR DE PAILLE,ENTRAINEMENT I
STROH-STREUER-ANTRIEB I
LANCIA-PAGLIA,COMANDO I
ESPARCIDOR DE PAJA,TRANSMISION I
HALMSPRIDARENS DRIVNING I

KEY	PART NO.	PART NAME	QTY	SERIAL NO.	975	975HY	REMARKS
1	Z10262	SHEAVE	1		X	X	
2	Z33774	BELT	1		X	X	
3	Z26249	SET SCREW	2		X	X	10 X 22 MM
4	14M7152	NUT	AR		X	X	M10
5	AZ13117	ECCENTRIC LOCKING COLLAR	1		X	X	INCL KEY 6
6	AZ19843	SET SCREW	2		X	X	KIT
7	Z23787	PRESSED FLANGED HOUSING	2		X	X	
8	JD39108	BALL BEARING	1		X	X	
9	19M7139	CAP SCREW	AR		X	X	M8 X 20
10	12M7008	LOCK WASHER	AR		X	X	8 MM
11	14M7029	NUT	AR		X	X	M8
12	49M4821	SHAFT KEY	1		X	X	6 X 6 X 32 MM
13	Z32781	SHAFT	1		X	X	
14	M15973	SHAFT KEY	2		X	X	
15	H91796	GEAR	2		X	X	(SUB FOR H82988)
16	M2300T	CLAMP	2		X	X	
17	14M7140	NUT	AR		X	X	M10
18	12M7013	LOCK WASHER	AR		X	X	10 MM
19	19M7180	CAP SCREW	AR		X	X	M10 X 45
20	Z36862	BRACKET	2		X	X	(SUB FOR H83797)
21	03M7128	BOLT	AR		X	X	M8 X 20
22	P44439	PRESSED FLANGED HOUSING	4		X	X	
23	JD8555	BALL BEARING	2		X	X	
24	JD8554	ECCENTRIC LOCKING COLLAR	2		X	X	INCL KEY 6

COPYRIGHT©1994 - 2008 DEERE & COMPANY Moline, Illinois All rights reserved

(4G20) STRAW SPREADER DRIVE II
EPARPILLEUR DE PAILLE,ENTRAINEMENT II
STROH-STREUER-ANTRIEB II
LANCIA-PAGLIA,COMANDO II
ESPARCIDOR DE PAJA,TRANSMISION II
HALMSPRIDARENS DRIVNING II

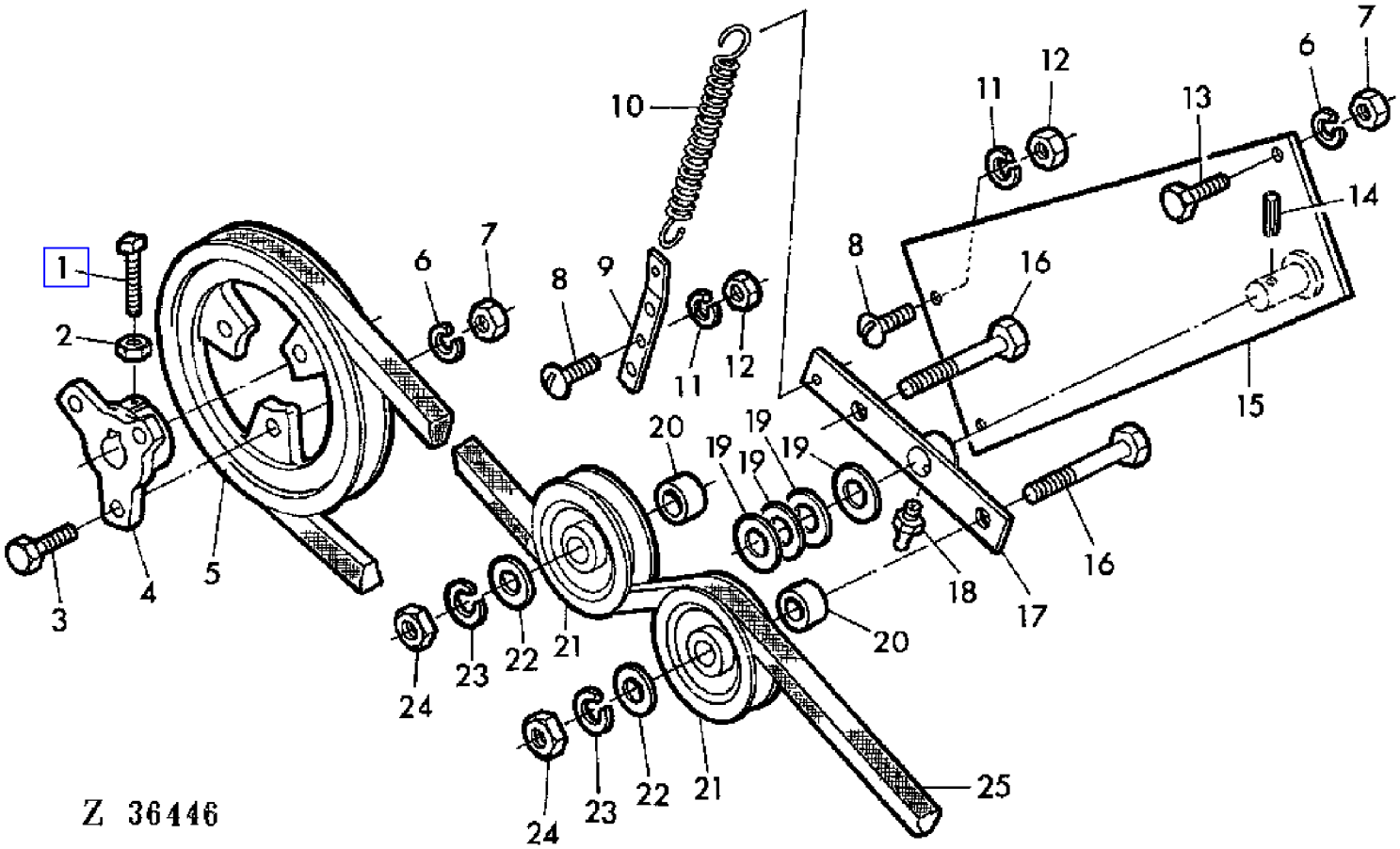

COPYRIGHT©1994 - 2008 DEERE & COMPANY Moline, Illinois All rights reserved

(4G20) STRAW SPREADER DRIVE II
EPARPILLEUR DE PAILLE,ENTRAINEMENT II
STROH-STREUER-ANTRIEB II
LANCIA-PAGLIA,COMANDO II
ESPARCIDOR DE PAJA,TRANSMISION II
HALMSPRIDARENS DRIVNING II

KEY	PART NO.	PART NAME	QTY	SERIAL NO.	975	975HY/4	REMARKS
1	Z32433	SET SCREW	2		X	X	10 X 30 MM
2	14M7152	NUT	2		X	X	M10
3	19M7323	CAP SCREW	3		X	X	M8 X 40
4	Z10859	HUB	1		X	X	
5	Z10860	PULLEY	1		X	X	
6	12M7008	LOCK WASHER	AR		X	X	8 MM
7	14M7029	NUT	AR		X	X	M8
8	21M7085	SCREW	AR		X	X	M6 X 20
9	Z33725	HOLDER	1		X	X	
10	L19219	SPRING	1		X	X	
11	12M7012	LOCK WASHER	AR		X	X	6 MM
12	14M7027	NUT	AR		X	X	M6
13	19M7139	CAP SCREW	AR		X	X	M8 X 20
14	34M7029	SPRING PIN	1		X	X	4 X 30 MM
15	AZ22698	HOLDER	1		X	X	
16	19M7140	CAP SCREW	2		X	X	M14 X 65
17	AZ22699	HOLDER	1		X	X	
18	58M7006	LUBRICATION FITTING	1		X	X	
19	L18947	WASHER	AR		X	X	28 X 20,5 X 0,56 MM
	L19366	SHIM	AR		X	X	32 X 20,5 X 2 MM
20	Z33402	SPACER	2		X	X	(SUB FOR Z29682)
21	AP24917	IDLER	2		X	X	
22	L19394	WASHER	2		X	X	
23	12M7009	LOCK WASHER	2		X	X	14 MM
24	14M7141	NUT	2		X	X	M14
25	Z33774	BELT	1		X	X	

COPYRIGHT©1994 - 2008 DEERE & COMPANY Moline, Illinois All rights reserved

(4H02) STRAW SPREADER GUARDS
EPARPILLEUR DE PAILLE,GARANTS
STROH-STREUER SCHUTZE
DIFESE LANCIA-PAGLIA
ESPARCIDOR DE PAJA,PROTECCION
HALMSPRIDARENS SKYDD

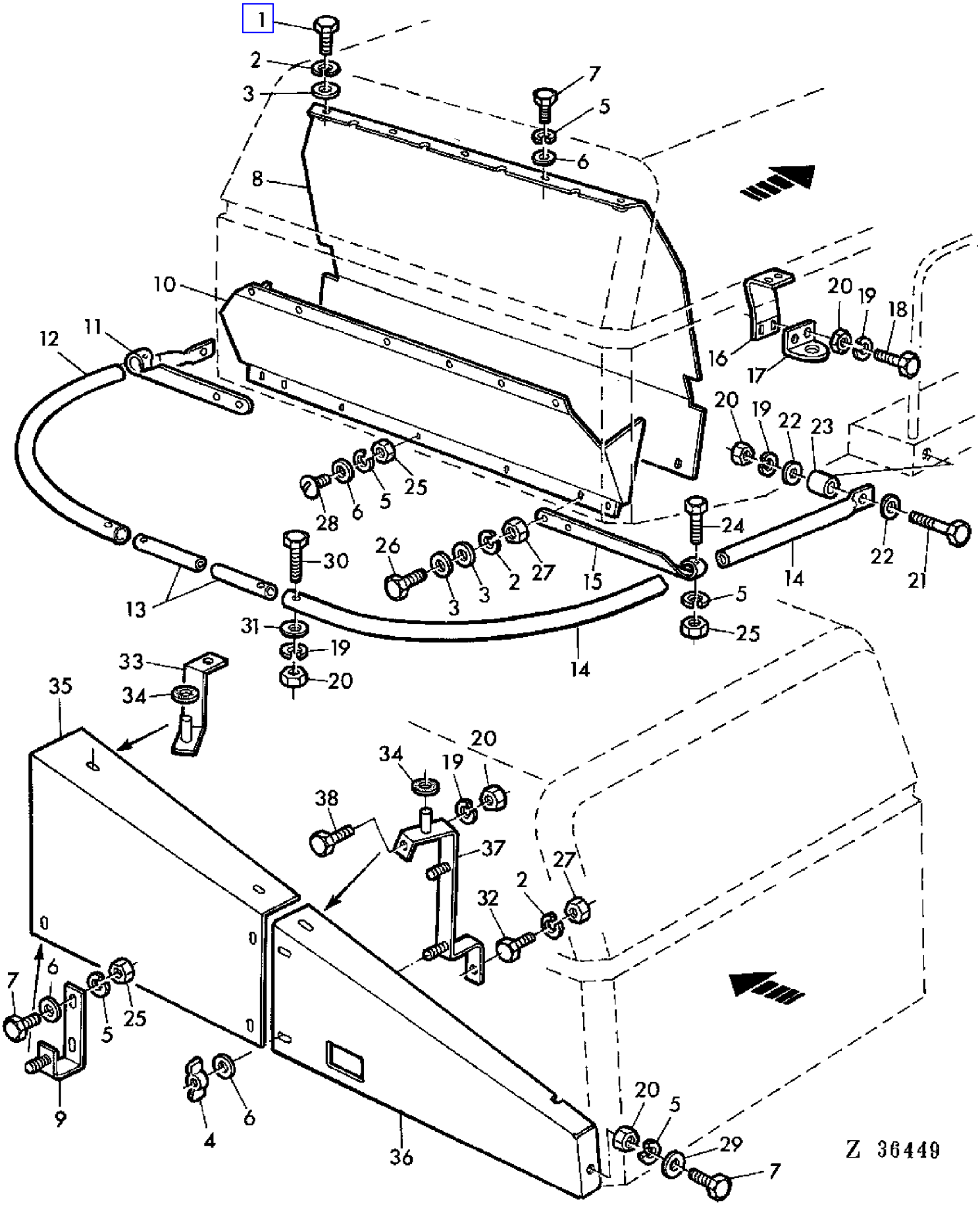

COPYRIGHT©1994 - 2008 DEERE & COMPANY Moline, Illinois All rights reserved

(4H02) STRAW SPREADER GUARDS
EPARPILLEUR DE PAILLE,GARANTS
STROH-STREUER SCHUTZE
DIFESE LANCIA-PAGLIA
ESPARCIDOR DE PAJA,PROTECCION
HALMSPRIDARENS SKYDD

KEY	PART NO.	PART NAME	QTY	SERIAL NO.	975 HY 54	REMARKS
1	19M7166	CAP SCREW	AR		X X	M10 X 20
2	12M7013	LOCK WASHER	AR		X X	10 MM
3	24M7040	WASHER	AR		X X	11 MM
4	14M6662	WING NUT	AR		X X	M6
5	12M7012	LOCK WASHER	AR		X X	6 MM
6	Z26250	WASHER	AR		X X	6,5 X 16 X 1,5 MM
7	19M7159	CAP SCREW	AR		X X	M6 X 16
8	AZ23907	DEFLECTOR	1		X X	
9	AZ23903	HOLDER	1		X X	
10	Z34888	COVER	1		X X	
11	Z30284	HOLDER	1		X X	LH
12	Z33720	GUARD	1		X X	LH
13	Z34877	GUARD	1		X X	
14	Z34885	GUARD	1		X X	RH
15	Z30285	HOLDER	1		X X	RH
16	Z35495	HOLDER	2		X X	
17	Z23089	ARRESTOR	2		X X	
18	19M7139	CAP SCREW	AR		X X	M8 X 20
19	12M7008	LOCK WASHER	AR		X X	8 MM
20	14M7029	NUT	AR		X X	M8
21	19M7269	CAP SCREW	AR		X X	M8 X 50
22	24M7055	WASHER	AR		X X	8,4 MM
23	Z22052	SPACER	AR		X X	
24	19M7320	CAP SCREW	AR		X X	M6 X 40
25	14M7027	NUT	AR		X X	6 MM
26	19M7167	CAP SCREW	AR		X X	M10 X 25
27	14M7140	NUT	AR		X X	M10
28	21M7031	SCREW	AR		X X	M6 X 16
29	24M7054	WASHER	AR		X X	6,4MM
30	19M7323	CAP SCREW	AR		X X	M8 X 40
31	24M7036	WASHER	AR		X X	9 MM
32	19M7287	CAP SCREW	1		X X	M10 X 50
33	AZ23902	HOLDER	1		X X	
34	Z33756	WASHER	2		X X	
35	Z34891	GUARD	1		X X	
36	AZ23908	GUARD	1		X X	
37	AZ23906	HOLDER	1		X X	
38	19M7162	CAP SCREW	1		X X	M8 X 16

COPYRIGHT©1994 - 2008 DEERE & COMPANY Moline, Illinois All rights reserved

(4B22) STRAW WALKER
SECOUEURS DE PAILLE
STROHSCHUETTLER
SCUOTIPAGLIA
SACAPAJAS
HALMSKAKARE

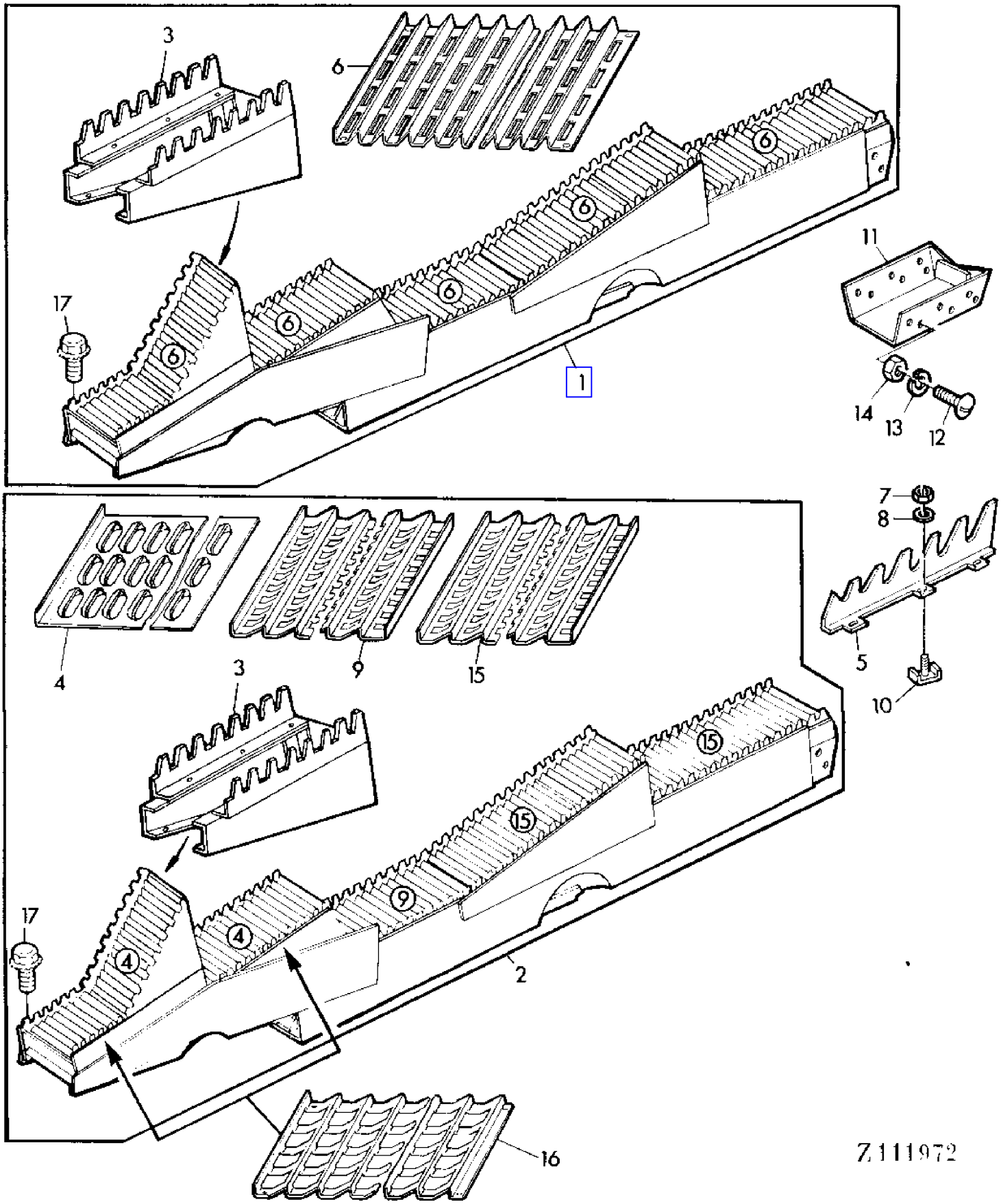

COPYRIGHT©1994 - 2008 DEERE & COMPANY Moline, Illinois All rights reserved

(4B22) STRAW WALKER
SECOUEURS DE PAILLE
STROHSCHUETTLER
SCUOTIPAGLIA
SACAPAJAS
HALMSKAKARE

KEY	PART NO.	PART NAME	QTY	SERIAL NO.		975	975HY/4	REMARKS
1	AZ27828	STRAW WALKER	5		- 036702	X	X	(B) (ORD AZ35361, AZ36297)
	AZ36297	STRAW WALKER	5	036703	-	X	X	(B) (SUB FOR AZ33591)
2	AZ27890	STRAW WALKER	5		- 036702	X	X	(C) (ORD AZ35361, AZ36296)
	AZ36296	STRAW WALKER	5	036703	-	X	X	(C) (SUB FOR AZ33590)
3	AZ26980	STRAW WALKER	1			X	X	
4	Z36520	STRAW WALKER GRID	2			X	X	(C)
5	Z42876	FISHBACK	5			X	X	(SUB FOR H33395)
6	Z38552	STRAW WALKER GRID	5			X	X	(B)
7	14M7165	LOCK NUT	AR			X	X	M6
8	Z26250	WASHER	AR			X	X	
9	Z42623	STRAW WALKER GRID	1			X	X	(C)
10	AZ13818	ANCHOR	15			X	X	
11	Z20048	EXTENSION	5			X	X	
12	21M7087	SCREW	AR			X	X	M6 X 12
13	12M7012	LOCK WASHER	AR			X	X	6 MM
14	14M7027	NUT	AR			X	X	M6
15	Z34382	STRAW WALKER GRID	2			X	X	(C) (ORD Z42623)
16	Z30420	STRAW WALKER GRID	2			X	X	(A)
17	Z42161	SCREW	AR			X	X	(FOR AZ36296, AZ36297)
	Z38459	CAP SCREW	AR			X	X	(FOR AZ27828, AZ27890, AZ33590, AZ33591)

(A) CORN-COB MIX
MELANGE EPIS-GRAINS
KOERNER-SPINDELGEMISCH
GRANOTURCO IN GRANO
MEZCLA DE GRANOS Y ZUROS
MAJSBLANDNING

(B) RICE-GRAIN
RIZ-CEREALES
REIS-GETREIDE
RISO-CEREALI
ARROZ-CEREALES
RIS-SAED

(C) CORN-GRAIN
MAIS-CEREALES
MAIS-GETREIDE
MAIS-CERALI
MAIZ-CEREALES
MAJS-SAD

COPYRIGHT©1994 - 2008 DEERE & COMPANY Moline, Illinois All rights reserved

(4C03) STRAW WALKER AND LOWER CHAFFER BOARD DRIVE
ENTRAINEMENT SECOUEURS ET CAISSON SASSEUR
SCHUETTLER UND SCHUETTELKASTEN ANTRIEB
COMANDO DEGLI SCUOTIPAGLIA E DELLA TAVOLA GRANO
TRANSMISION PARA SACAPAJAS Y CAJA DE CRIBAS
SKAKARENS OCH SALLADANS DRIVNING

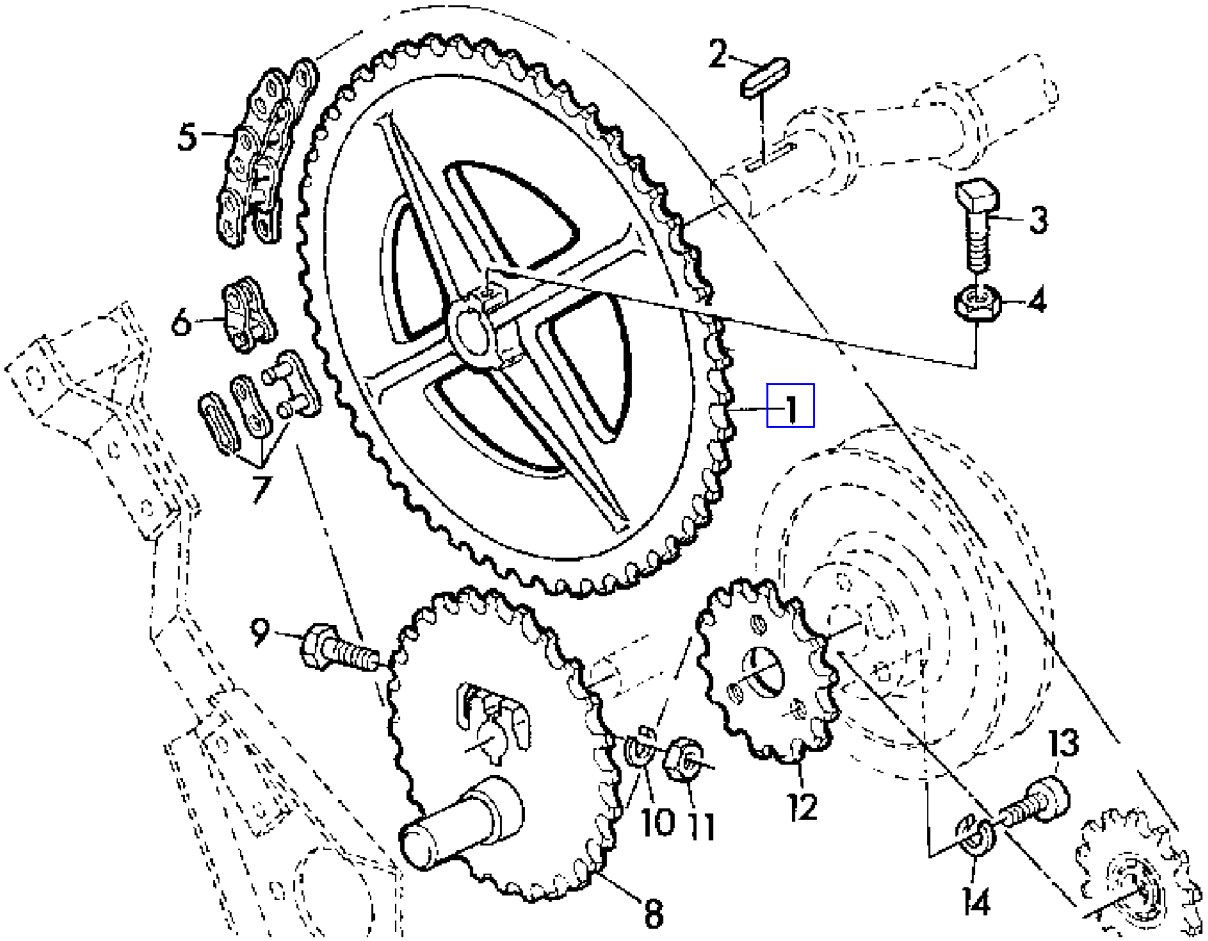

Z 31676

COPYRIGHT©1994 - 2008 DEERE & COMPANY Moline, Illinois All rights reserved

(4C03) STRAW WALKER AND LOWER CHAFFER BOARD DRIVE
ENTRAINEMENT SECOUEURS ET CAISSON SASSEUR
SCHUETTLER UND SCHUETTELKASTEN ANTRIEB
COMANDO DEGLI SCUOTIPAGLIA E DELLA TAVOLA GRANO
TRANSMISION PARA SACAPAJAS Y CAJA DE CRIBAS
SKAKARENS OCH SALLADANS DRIVNING

KEY	PART NO.	PART NAME	QTY	SERIAL NO.		975	975HY/4	REMARKS
1	Z11042	CHAIN SPROCKET	1		- 017017	X		Z = 56 (SUB FOR AZ24649)
	Z10025	CHAIN SPROCKET	1		- 017017	X		AR, Z = 63
	Z11367	CHAIN SPROCKET	1	017018	-	X	X	Z = 54 (SUB FOR Z11176)
2	49M4836	SHAFT KEY	1			X	X	8 X 7 X 45 MM
3	Z32433	SET SCREW	2			X	X	
4	14M7152	NUT	2			X	X	M10
5	AZ10279	LINK CHAIN	1		- 017017	X		L = 122, INCL KEY 7
	AZ27086	LINK CHAIN	1	017018	-	X	X	L = 104, INCL KEY 7
6	AZ12882	LINK	1		- 017017	X		
	AL14908	LINK	1	017018	-	X	X	
7	AL14209	LINK	1		- 017017	X		
	AL14211	LINK	1	017018	-	X	X	
8	Z11379	CRANK	1		- 017017	X		Z = 33 (SUB FOR Z10011)
	Z11378	CRANK	1	017018	- 018097	X		Z = 29 (SUB FOR Z11177)
	Z11368	CRANK	1	018098	- XXXX	X	X	Z = 29 (ORD Z11432 W/ Z11383) (SUB FOR Z11207)
	Z11541	CRANK	1	027678	-	X	X	Z = 29 (SUB FOR Z11368, Z11382, Z11432)
9	19M7287	CAP SCREW	1			X	X	M10 X 50
10	12M7013	LOCK WASHER	1			X	X	10 MM
11	14M7140	NUT	1			X	X	M10
12	Z30028	CHAIN SPROCKET	1		- 017017	X		Z = 16
	Z38056	CHAIN SPROCKET	1	017018	-	X	X	Z = 14
13	19M7555	SCREW	3			X	X	M8 X 30
14	12M7008	LOCK WASHER	3			X	X	8 MM

COPYRIGHT©1994 - 2008 DEERE & COMPANY Moline, Illinois All rights reserved

(4B24) STRAW WALKER SHAFTS,FRONT
ARBRES DES SECOUEURS,AVANT
STROHSCHUETTLER-WELLE,VORN
ALBERI SCUOTIPAGLIA ANTERIORI
CIGUEENAL DELANTERO DEL SACAPAJAS
FRAMRE HALMSKAKARAXLAR

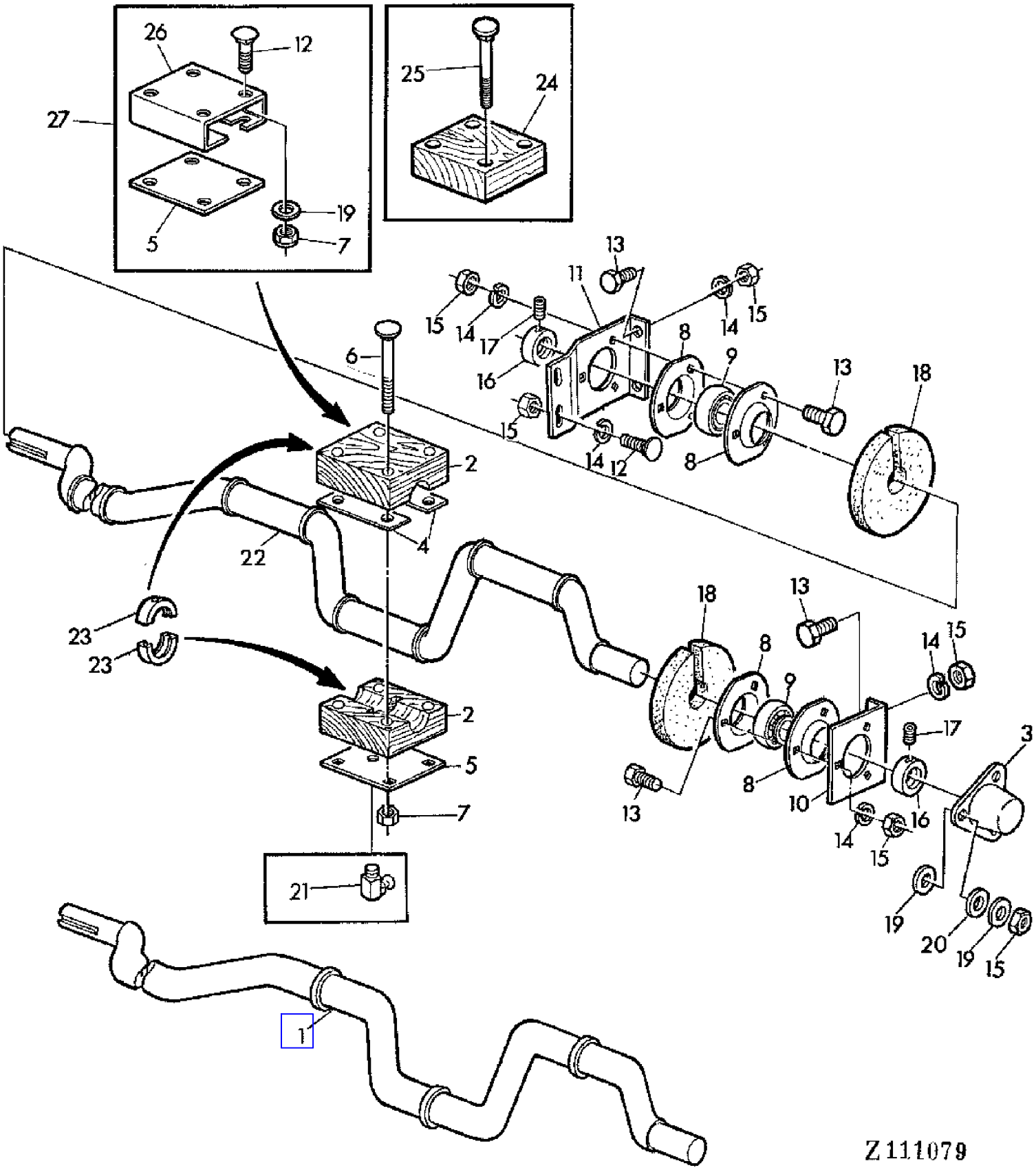

COPYRIGHT©1994 - 2008 DEERE & COMPANY Moline, Illinois All rights reserved

(4B24) STRAW WALKER SHAFTS,FRONT
ARBRES DES SECOUEURS,AVANT
STROHSCHUETTLER-WELLE,VORN
ALBERI SCUOTIPAGLIA ANTERIORI
CIGUEENAL DELANTERO DEL SACAPAJAS
FRAMRE HALMSKAKARAXLAR

KEY	PART NO.	PART NAME	QTY	SERIAL NO.	975	975HY/4	REMARKS
1	AZ28107	CRANKSHAFT	1		X	X	OD = 38 MM (SUB FOR AZ26860)
2	AZ31216	BEARING	5		X		KIT, ID = 35 MM (SUB FOR AZ21612)
	AZ31217	BEARING	5		X	X	KIT, ID = 38 MM, INCL KEY 23 (SUB FOR AZ28082, AZ28804, AZ30510)
3	Z38380	GUARD	1		X	X	(SUB FOR Z31792, Z35647)
4	Z40787	SHIM	20		X	X	(SUB FOR Z37925)
5	Z37922	PLATE	AR		X	X	(SUB FOR Z20040)
6	Z40205	BOLT	AR		X	X	
7	14M7167	LOCK NUT	AR		X	X	M10
8	Z38395	PRESSED FLANGED HOUSING	4		X	X	(SUB FOR P45502)
9	JD39103	BALL BEARING	2		X	X	
10	Z20051	BRACKET	1		X	X	
11	Z43584	BRACKET	1		X	X	(SUB FOR Z34651)
12	03M7088	BOLT	AR		X	X	M10 X 20
13	19M7167	CAP SCREW	AR		X	X	M10 X 25
14	12M7013	LOCK WASHER	AR		X	X	10 MM
15	14M7140	NUT	AR		X	X	M10
16	AZ10045	ECCENTRIC LOCKING COLLAR	2		X	X	ASSY, INCL KEY 17
17	AZ19844	SET SCREW	2		X	X	KIT
18	Z22701	FOAM PAD	2		X	X	
19	24M7040	WASHER	AR		X	X	11 MM
20	24M7037	WASHER	AR		X	X	9 MM
21	58M7008	LUBRICATION FITTING	AR		X	X	
22	AZ21577	CRANKSHAFT	1		X		OD = 35 MM (ORD (5) AZ28082, AZ28107, (5) Z37922, (20) Z40787, (5) 58M7008)
23	Z39428	GUIDE	10		X	X	
24	Z42333	HALF CLAMP	AR	- 036702	X	X	(ORD AZ35361)
25	03M7289	BOLT	AR	- 036702	X	X	M10 X 130
26	Z44677	BRACKET	1	- 036702	X	X	(FOR AZ33590, AZ33591, AZ36296, AZ36297)
27	AZ35361	SUPPORT	5	- 036702	X	X	(FOR AZ33590, AZ33591, AZ36296, AZ36297)

COPYRIGHT©1994 - 2008 DEERE & COMPANY Moline, Illinois All rights reserved

(4C02) STRAW WALKER SHAFTS,REAR
ARBRES DESECOUEURS,ARRIERE
STROHSCHUETTLER-WELLEN,HINTEN
ALBERI SCUOTIPAGLIA POSTERIORI
CIGUEENAL TRASERO DEL SACAPAJAS
BAKRE HALMSKAKARAXLAR

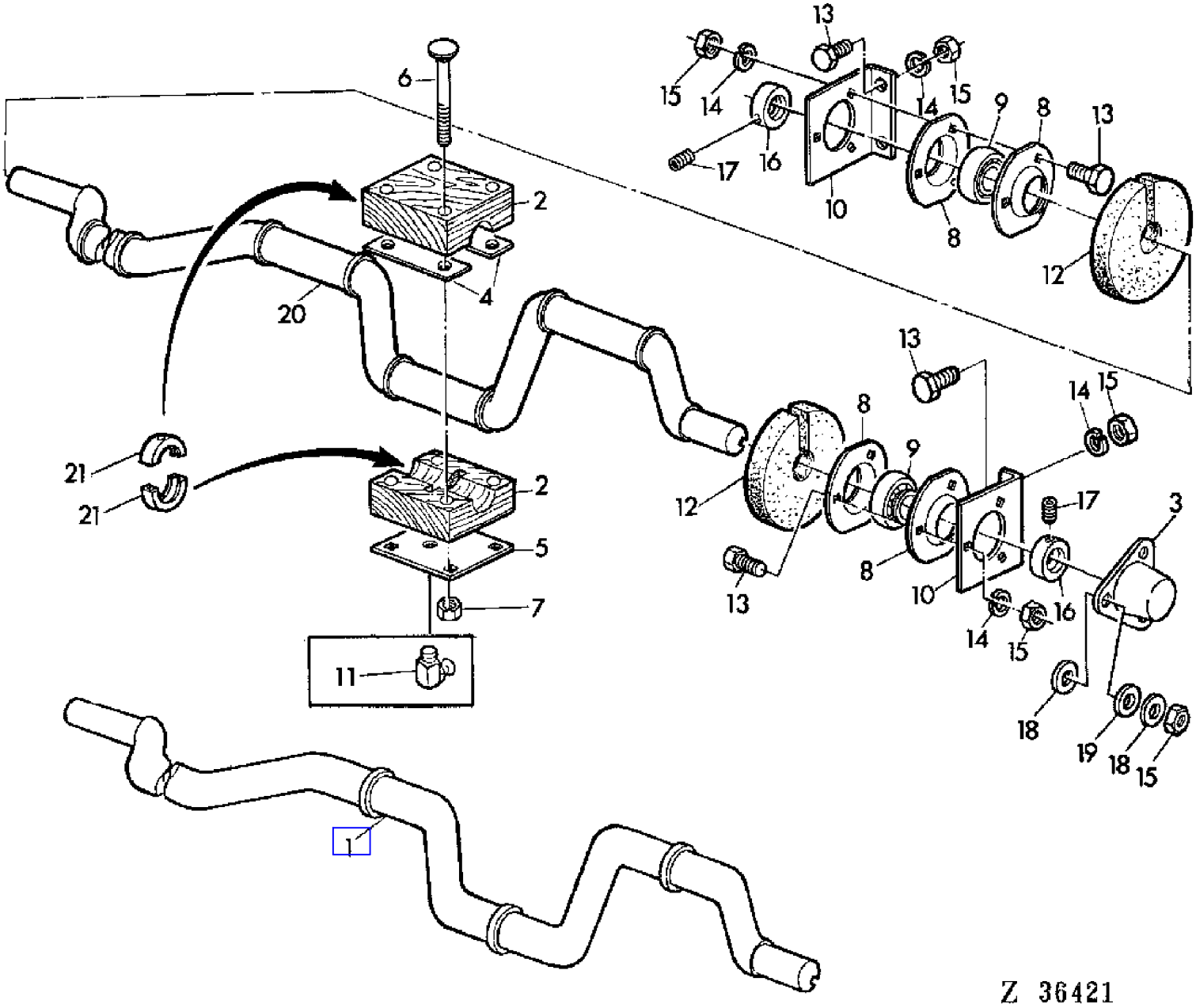

COPYRIGHT©1994 - 2008 DEERE & COMPANY Moline, Illinois All rights reserved

(4C02) STRAW WALKER SHAFTS,REAR
ARBRES DESECOUEURS,ARRIERE
STROHSCHUETTLER-WELLEN,HINTEN
ALBERI SCUOTIPAGLIA POSTERIORI
CIGUEENAL TRASERO DEL SACAPAJAS
BAKRE HALMSKAKARAXLAR

KEY	PART NO.	PART NAME	QTY	SERIAL NO.			975	975HY/4	REMARKS
1	AZ28107	CRANKSHAFT	1	013568	-		X	X	OD = 38 MM (FOR AZ26860) (SUB FOR AZ21577)
2	AZ31216	BEARING	5		-	013567	X		KIT,ID = 35 MM (FOR AZ21577) (SUB FOR AZ21612)
	AZ31217	BEARING	5				X	X	KIT, ID = 38 MM, INCL KEY 21 (FOR AZ28107) (SUB FOR AZ28082, AZ28804, AZ30510)
3	Z38380	GUARD	1				X	X	(SUB FOR Z31792, Z35647)
4	Z32891	STRAP	20		-	013567	X		(FOR AZ21577)
	Z40787	SHIM	20	013568	-		X	X	(FOR AZ28107) (SUB FOR Z37925)
5	Z37922	PLATE	5				X	X	(SUB FOR Z20040)
6	Z40205	BOLT	AR				X	X	
7	14M7167	LOCK NUT	AR				X	X	M10
8	Z38395	PRESSED FLANGED HOUSING	4				X	X	(SUB FOR P45502)
9	JD39103	BALL BEARING	2				X	X	
10	Z20051	BRACKET	2				X	X	
11	58M7008	LUBRICATION FITTING	AR	013568	-		X	X	
12	Z22701	FOAM PAD	2				X	X	
13	19M7167	CAP SCREW	AR				X	X	M10 X 25
14	12M7013	LOCK WASHER	AR				X	X	10 MM
15	14M7140	NUT	AR				X	X	M10
16	AZ10045	ECCENTRIC LOCKING COLLAR	2				X	X	ASSY, INCL KEY 17
17	AZ19844	SET SCREW	2				X	X	KIT
18	24M7040	WASHER	AR				X	X	11 MM
19	24M7037	WASHER	AR				X	X	9 MM
20	AZ21577	CRANKSHAFT	1		-	013567	X		OD = 35 MM (ORD (5) AZ28082, AZ28107, (5) Z37922, (20) Z40205, (20) Z40787, (5) 58M7008)
21	Z39428	GUIDE	10				X	X	

COPYRIGHT©1994 - 2008 DEERE & COMPANY Moline, Illinois All rights reserved

(1F14) STRAW WALKER WARNING DEVICE
AVERTISSEURS DE BOURRAGE
STROHWARNANLAGE
AVVISATORE DI BLOCCAGGIO
ALARMA PARA LOS ATASCOS DE PAJA
VARNINGSANORDNING FOR SKAKARE

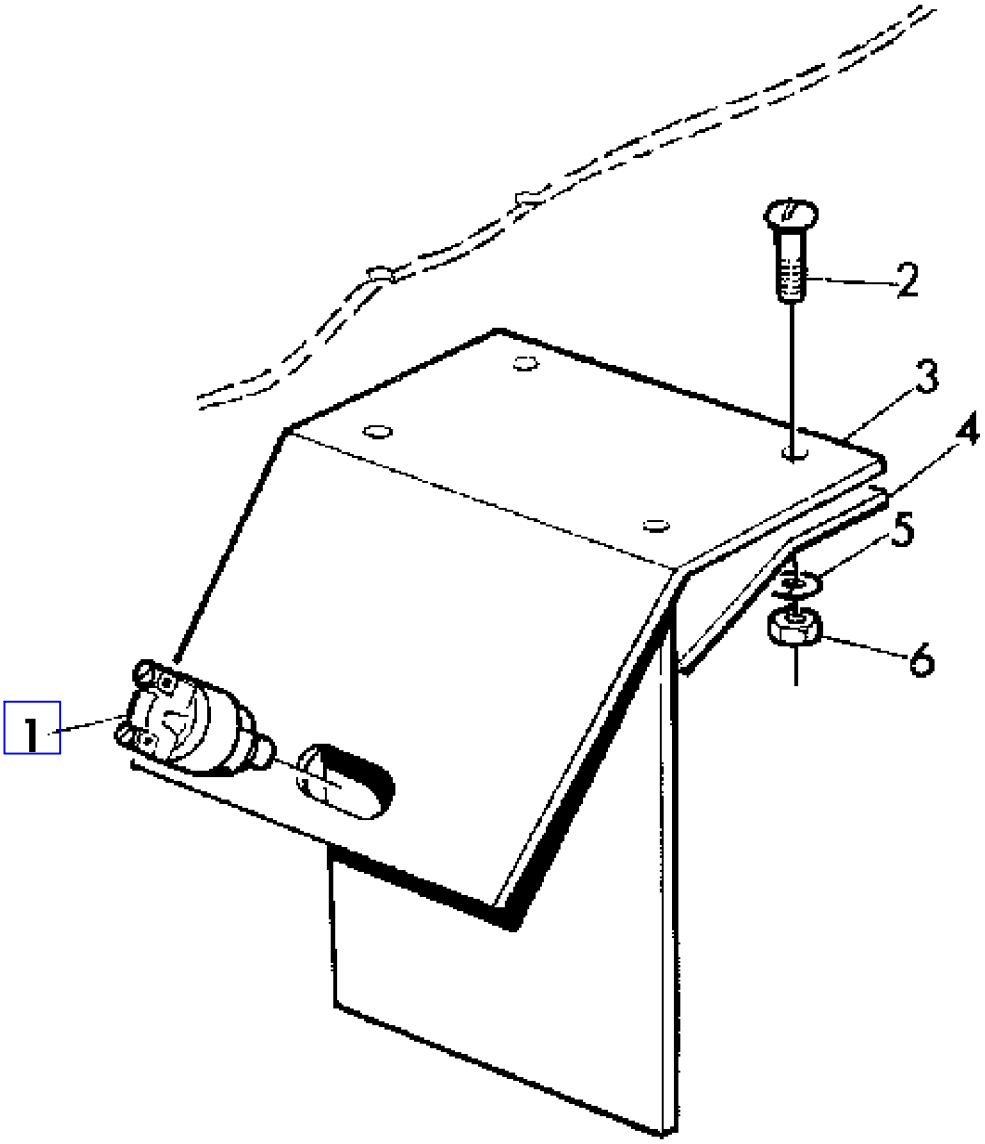

Z 26901

COPYRIGHT©1994 - 2008 DEERE & COMPANY Moline, Illinois All rights reserved

(1F14) STRAW WALKER WARNING DEVICE
AVERTISSEURS DE BOURRAGE
STROHWARNANLAGE
AVVISATORE DI BLOCCAGGIO
ALARMA PARA LOS ATASCOS DE PAJA
VARNINGSANORDNING FOR SKAKARE

KEY	PART NO.	PART NAME	QTY	SERIAL NO.	975	975HY/4	REMARKS
1	AZ19518	SWITCH	2		X	X	
2	21M7031	SCREW	8		X	X	M6 X 15
3	AZ19516	FLAP	2		X	X	
4	Z31553	HOLDER	2		X	X	
5	12M7012	LOCK WASHER	8		X	X	6 MM
6	14M7027	NUT	8		X	X	M6

COPYRIGHT©1994 - 2008 DEERE & COMPANY Moline, Illinois All rights reserved

(1B25) SUCTION NOZZLE
BUSE D'ASPIRATION
ABSAUGDUESE
BOCCA D'ASPIRAZIONE
BOQUILLA DE ASPIRACION
UTSUGNINGSDYSA

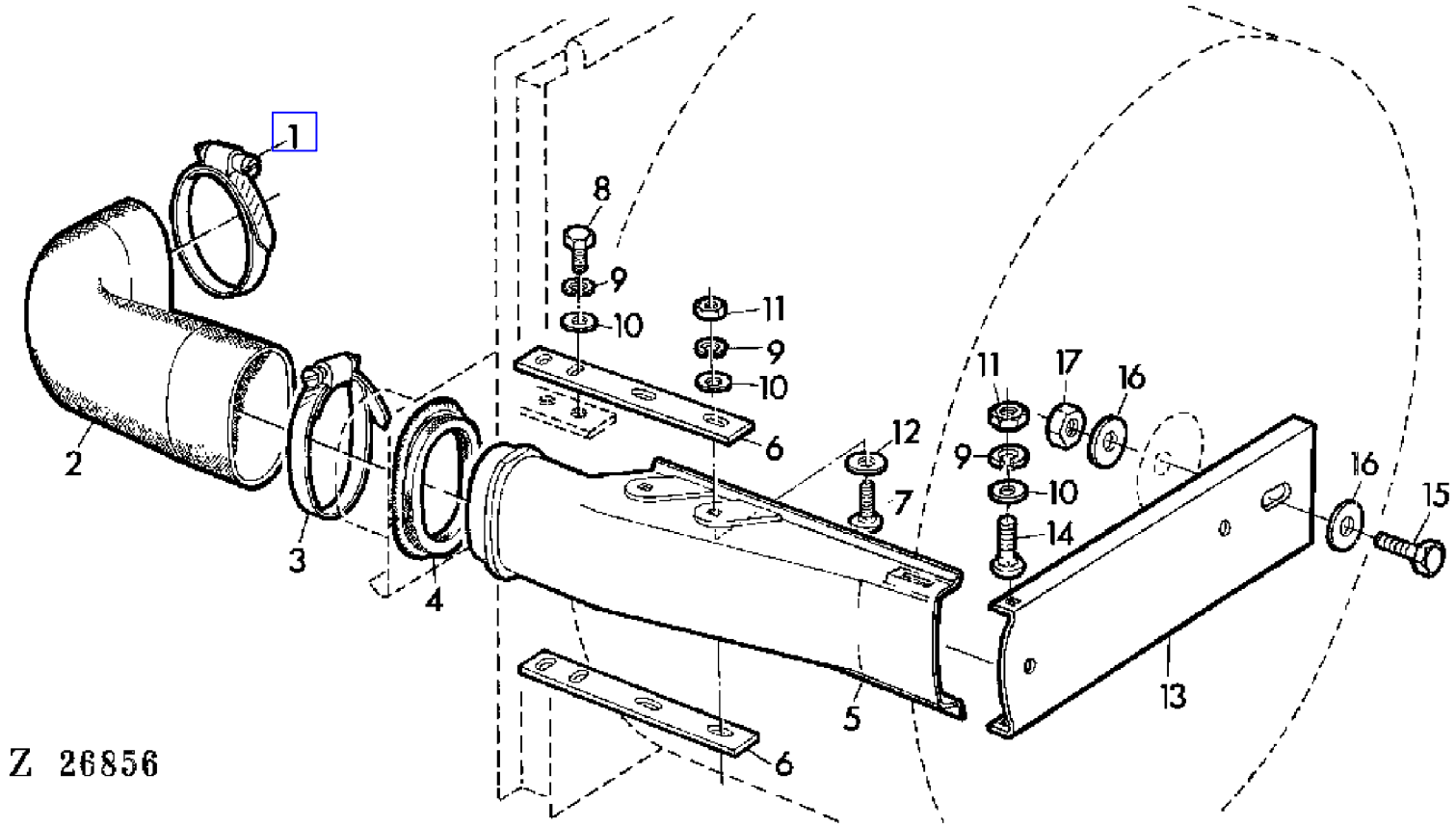

COPYRIGHT©1994 - 2008 DEERE & COMPANY Moline, Illinois All rights reserved

(1B25) SUCTION NOZZLE
BUSE D'ASPIRATION
ABSAUGDUESE
BOCCA D'ASPIRAZIONE
BOQUILLA DE ASPIRACION
UTSUGNINGSDYSA

KEY	PART NO.	PART NAME	QTY	SERIAL NO.	975	975HY/4	REMARKS
1	Z30340	CLAMP	1		X	X	
2	Z33077	HOSE	1		X	X	
3	Z33087	CLAMP	1		X	X	
4	Z33071	GASKET	1		X	X	
5	Z32924	NOZZLE	1		X	X	
6	Z33070	RETAINER	2		X	X	
7	03M7068	BOLT	4		X	X	M6 X 20
8	19M7159	CAP SCREW	4		X	X	M6 X 15
9	12M7012	LOCK WASHER	AR		X	X	6 MM
10	24M7054	WASHER	AR		X	X	6 MM
11	14M7027	NUT	AR		X	X	M6
12	24M7025	WASHER	AR		X	X	M7
13	Z33076	SHEET	1		X	X	
14	03M7092	BOLT	2		X	X	M6 X 16
15	19M7301	CAP SCREW	1		X	X	M8 X 40
16	24M7036	WASHER	AR		X	X	9 MM
17	14M7029	NUT	AR		X	X	M8

COPYRIGHT©1994 - 2008 DEERE & COMPANY Moline, Illinois All rights reserved

(3E06) SUN ROOF
PARE-SOLEIL
SONNENDACH
TENDINA PARASOLE
PARASOL
SOLSKYDD

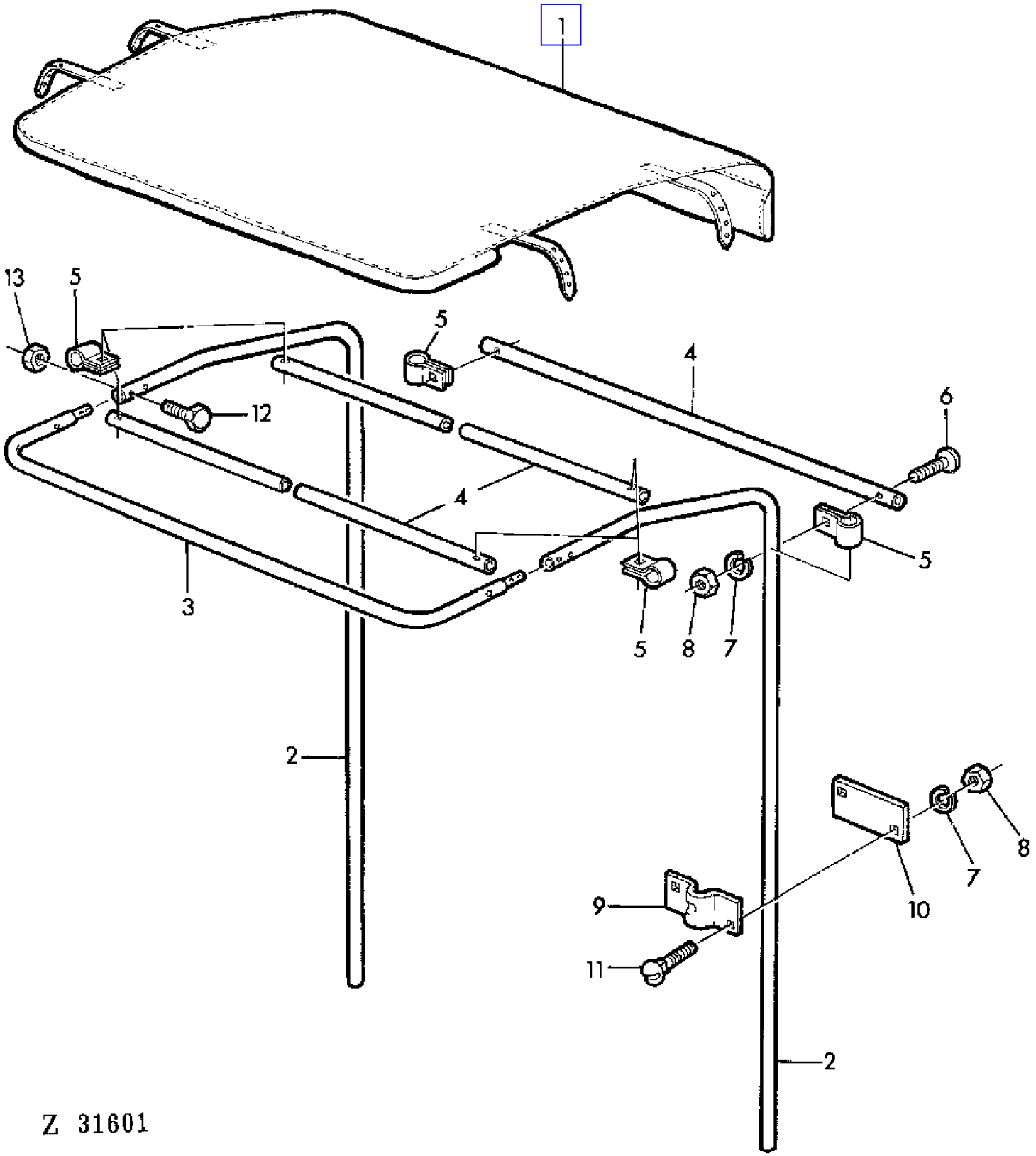

COPYRIGHT©1994 - 2008 DEERE & COMPANY Moline, Illinois All rights reserved

(3E06) SUN ROOF
PARE-SOLEIL
SONNENDACH
TENDINA PARASOLE
PARASOL
SOLSKYDD

KEY	PART NO.	PART NAME	QTY	SERIAL NO.	975	975HY/4	REMARKS
1	AZ31449	CANVAS	1		X	X	(SUB FOR AZ16339)
2	Z27569	PIPE	2		X	X	
3	AZ16340	PIPE	1		X	X	
4	Z27565	PIPE	3		X	X	
5	Z27564	CLAMP	6		X	X	
6	21M7166	SCREW	6		X	X	M8 X 40
7	12M7008	LOCK WASHER	14		X	X	8 MM
8	14M7029	NUT	14		X	X	M8
9	Z27563	CLAMP	4		X	X	
10	Z27568	PLATE	4		X	X	
11	03M7054	BOLT	8		X	X	M8 X 20
12	19M7318	SCREW	4		X	X	M6 X 30
13	14M7027	NUT	4		X	X	M6

COPYRIGHT©1994 - 2008 DEERE & COMPANY Moline, Illinois All rights reserved

(1F13) SWITCH FOR HANDBRAKE
CONTACTEUR DE FREIN A MAIN
SCHALTER FUER HANDBREMSE
INTERRUTTORE DI FRENO A MANO
INTERRUPTOR DEL FRENO DE MANO
OMKOPPLARE FOR HANDBROMS

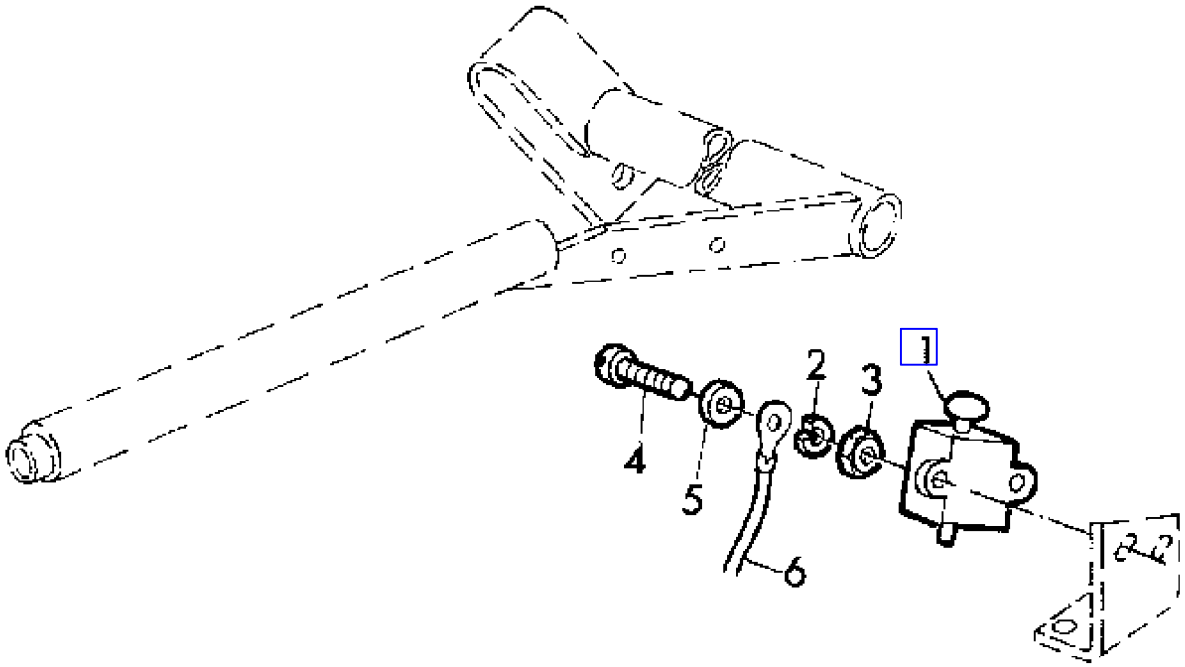

Z 26900

COPYRIGHT©1994 - 2008 DEERE & COMPANY Moline, Illinois All rights reserved

(1F13) SWITCH FOR HANDBRAKE
CONTACTEUR DE FREIN A MAIN
SCHALTER FUER HANDBREMSE
INTERRUTTORE DI FRENO A MANO
INTERRUPTOR DEL FRENO DE MANO
OMKOPPLARE FOR HANDBROMS

KEY	PART NO.	PART NAME	QTY	SERIAL NO.	975	975HY/4	REMARKS
1	AL11174	SWITCH	1		X	X	
2	12M7031	LOCK WASHER	2		X	X	4MM
3	14M7139	NUT	2		X	X	M4
4	21M7135	SCREW	2		X	X	M4 X 25
5	24M7117	WASHER	2		X	X	4 MM
6	AZ10902	WIRING LEAD	1		X	X	

COPYRIGHT©1994 - 2008 DEERE & COMPANY Moline, Illinois All rights reserved

(4E06) TAILINGS AND CLEAN GRAIN AUGER
VIS A GRAIN ET A OTONS
KOERNER- UND UEBERKEHRSCHNECKE
COCLEE DEL GRANO E DEL RICUPERO
SINFIN DE RETRILLA Y GRANO LIMPIO
SADES - OCH RETURGODSSKRUV

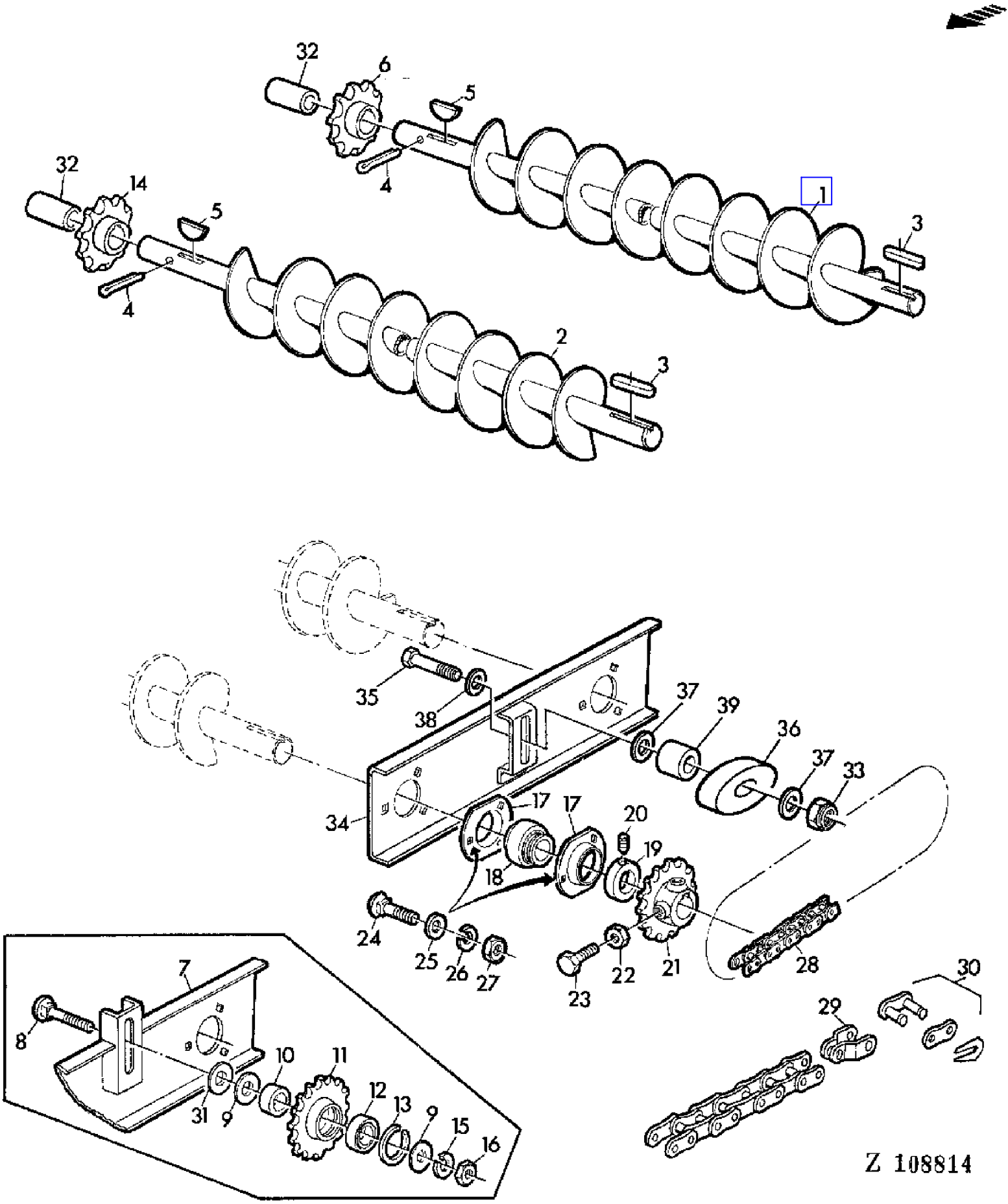

COPYRIGHT©1994 - 2008 DEERE & COMPANY Moline, Illinois All rights reserved

(4E06) TAILINGS AND CLEAN GRAIN AUGER
VIS A GRAIN ET A OTONS
KOERNER- UND UEBERKEHRSCHNECKE
COCLEE DEL GRANO E DEL RICUPERO
SINFIN DE RETRILLA Y GRANO LIMPIO
SADES - OCH RETURGODSSKRUV

KEY	PART NO.	PART NAME	QTY	SERIAL NO.			975	975HY/4	REMARKS
1	AZ25381	AUGER	1		-	007451	X		LGTH = 1949 MM, OD = 30 MM (SUB FOR AZ23177)
	AZ25380	AUGER	1	007452	-	016667	X		LGTH = 1949 MM, OD = 30 MM
	AZ26939	AUGER	1	016668	-		X	X	OD = 30 MM, LGTH = 1759 MM
2	AZ23176	AUGER	1		-	016667	X		OD = 25 MM, LGTH = 1750 MM
	AZ26938	AUGER	1	016668	-		X	X	OD = 30 MM, LGTH = 1759 MM
3	49M4111	SHAFT KEY	2				X	X	8 X 7 X 40 MM
4	11M7034	COTTER PIN	AR				X	X	5 X 65 MM
5	26M4228	SHAFT KEY	2				X	X	8 X 11 MM
6	Z11209	CHAIN SPROCKET	1		-	016667	X		Z = 8, (SUB FOR Z10997) ID = 25 MM
	Z11210	CHAIN SPROCKET	1	016668	-	017017	X		Z = 8, (SUB FOR Z10886) ID = 30 MM
	Z11211	CHAIN SPROCKET	1	017018	-		X	X	Z = 8, ID = 30 MM
7	AZ23174	HOLDER	1		-	029967	X	X	(ORD AZ30658 W/ Z41248)
8	03M7129	BOLT	AR		-	029967	X	X	M16 X 55
9	24M7049	WASHER	AR		-	029967	X	X	18 MM
10	Z25755	WASHER	2		-	029967	X	X	
11	Z10940	CHAIN SPROCKET	1		-	029967	X	X	Z = 26 (FOR AZ23174)
12	JD30324	BALL BEARING	1		-	029967	X	X	
13	L49514	SNAP RING	1		-	029967	X	X	
14	Z10997	CHAIN SPROCKET	1		-	016667	X		Z = 8, ID = 25 MM
	Z10886	CHAIN SPROCKET	2	016668	-		X	X	ID = 30 MM
15	12M5846	LOCK WASHER	AR		-	029967	X	X	16 MM
16	14M7146	NUT	AR		-	029967	X	X	M16
17	P47232	PRESSED FLANGED HOUSING	4				X	X	
18	JD39105	BALL BEARING	2				X	X	
19	AZ10044	ECCENTRIC LOCKING COLLAR	2				X	X	ASSY, INCL KEY 20
20	AZ19843	SET SCREW	2				X	X	KIT
21	Z10955	CHAIN SPROCKET	2				X	X	
22	14M7152	NUT	AR				X	X	M10
23	Z26249	SET SCREW	4				X	X	10 X 22 MM
24	03M7054	BOLT	AR				X	X	M8 X 20
25	24M7036	WASHER	AR				X	X	9 MM
26	12M7008	LOCK WASHER	AR				X	X	8 MM
27	14M7029	NUT	AR				X	X	M8
28	AZ23212	LINK CHAIN	1				X	X	L = 88, INCL KEY 30
29	AZ12882	LINK	1				X	X	
30	AL14209	LINK	1				X	X	
31	24M5783	WASHER	AR		-	029967	X	X	
32	Z37953	SPACER	2				X	X	
33	14M7167	LOCK NUT	1	029968	-		X	X	M10
34	AZ30658	HOLDER	1	029968	-		X	X	(SUB FOR AZ23174)
35	19M7327	CAP SCREW	1	029968	-		X	X	M10 X 65
36	Z41248	TIGHTENER	1	029968	-	XXXX	X	X	(FOR AZ30658) (ORD Z44031, Z44212)

COPYRIGHT©1994 - 2008 DEERE & COMPANY Moline, Illinois All rights reserved

(4E06) TAILINGS AND CLEAN GRAIN AUGER
VIS A GRAIN ET A OTONS
KOERNER- UND UEBERKEHRSCHNECKE
COCLEE DEL GRANO E DEL RICUPERO
SINFIN DE RETRILLA Y GRANO LIMPIO
SADES - OCH RETURGODSSKRUV

KEY	PART NO.	PART NAME	QTY	SERIAL NO.		975	975HY/4	REMARKS
	Z44031	TIGHTENER	1	XXXX	-	X	X	
37	24M7178	WASHER	1	029968	-	X	X	10,5 MM
38	24M7028	WASHER	2	XXXX	-	X	X	10,5 MM
39	Z44212	BUSHING	1	XXXX	-	X	X	

COPYRIGHT©1994 - 2008 DEERE & COMPANY Moline, Illinois All rights reserved

(4E04) TAILINGS AND CLEAN GRAIN AUGER HOUSING
CARTER DES VIS A GRAIN ET A OTONS
GEHAEUSE FUER KOERNER UND UEBERKEHRSCHNECKE
ALLOGGIAMENTO DELLE COCLEE DEL GRANO E DEL RICUPERO
CARCASA DEL SINFIN DE RETRILLA Y DE GRANO LIMPIO
HUS FOR SADES-OCH RETURGODSSKRUV

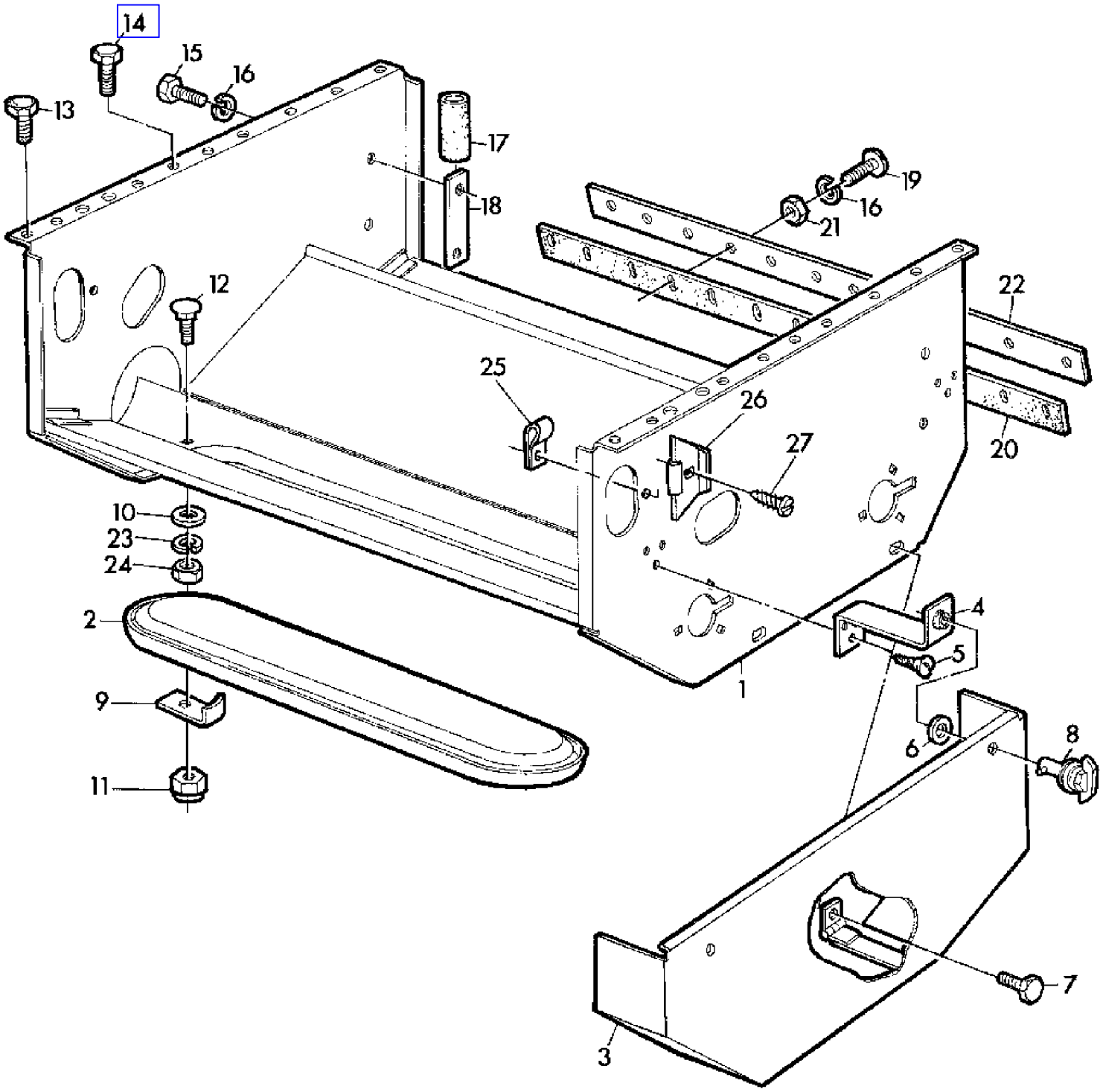

Z 31697

COPYRIGHT©1994 - 2008 DEERE & COMPANY Moline, Illinois All rights reserved

(4E04) TAILINGS AND CLEAN GRAIN AUGER HOUSING
CARTER DES VIS A GRAIN ET A OTONS
GEHAEUSE FUER KOERNER UND UEBERKEHRSCHNECKE
ALLOGGIAMENTO DELLE COCLEE DEL GRANO E DEL RICUPERO
CARCASA DEL SINFIN DE RETRILLA Y DE GRANO LIMPIO
HUS FOR SADES-OCH RETURGODSSKRUV

KEY	PART NO.	PART NAME	QTY	SERIAL NO.	975	975HY	REMARKS
1	AZ23182	CASE	1		X	X	
2	Z34303	COVER	2		X	X	
3	AZ23180	GUARD	1		X	X	
4	AZ23681	HOLDER	2		X	X	
5	37M7029	SCREW	AR		X	X	M5,5 X 13
6	Z34136	WASHER	2		X	X	
7	19M7162	CAP SCREW	AR		X	X	M8 X 16
8	AZ23253	LATCH	2		X	X	
9	Z34294	HOLDER	4		X	X	
10	24M7040	WASHER	AR		X	X	11 MM
11	14M7166	LOCK NUT	AR		X	X	M8
12	03M7160	BOLT	AR		X	X	M8 X 35
13	19M7139	CAP SCREW	AR		X	X	M8 X 20
14	19M7163	CAP SCREW	AR		X	X	M8 X 25
15	19M7159	CAP SCREW	AR		X	X	M6 X 15
16	12M7012	LOCK WASHER	AR		X	X	6 MM
17	Z25904	HOSE	2		X	X	
18	Z25903	STRAP	2		X	X	
19	21M7031	SCREW	AR		X	X	M6 X 15
20	Z22787	GASKET	1		X	X	
21	14M7027	NUT	AR		X	X	M6
22	Z35554	REINFORCEMENT	1		X	X	(SUB FOR Z22789)
23	12M7008	LOCK WASHER	AR		X	X	8 MM
24	14M7029	NUT	AR		X	X	M8
25	Z20443	NUT	2		X	X	
26	Z22335	FLAP	2		X	X	
27	37M7009	SCREW	AR		X	X	M5,5 X 10

COPYRIGHT©1994 - 2008 DEERE & COMPANY Moline, Illinois All rights reserved

(4E18) TAILINGS AUGER AND ELEVATOR DRIVE I
COMMANDE D'ELEVATEUR D'OTONS I
UEBERKEHRELEVATOR-ANTRIEB I
COMANDO ELEVATORE RICUPERO I
TRANSMISION DEL ELEVADOR DE RETRILLA I
RETURGODSELEVATORNS DRIVNING I

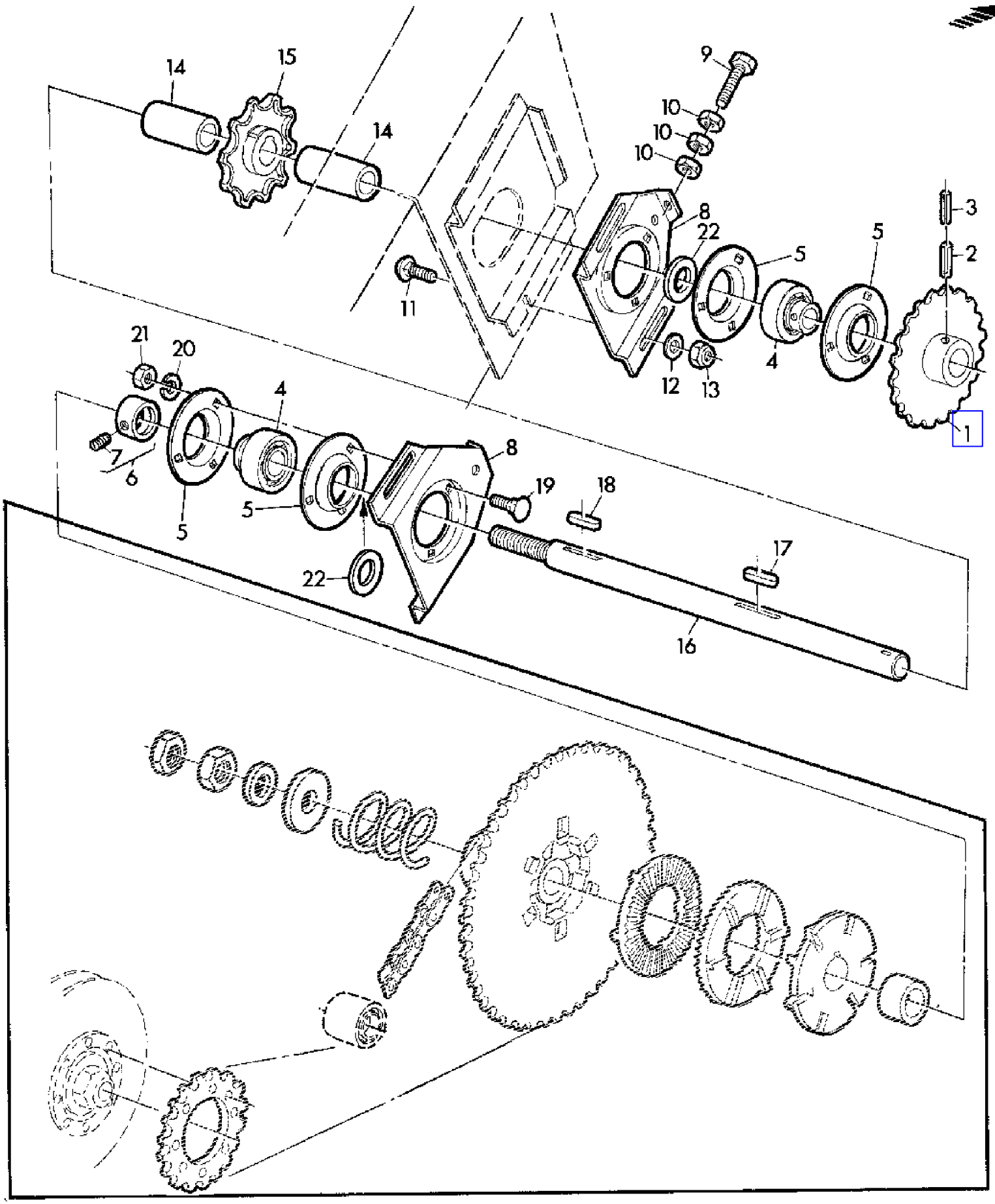

Z 101708

COPYRIGHT©1994 - 2008 DEERE & COMPANY Moline, Illinois All rights reserved

(4E18) TAILINGS AUGER AND ELEVATOR DRIVE I
COMMANDE D'ELEVATEUR D'OTONS I
UEBERKEHRELEVATOR-ANTRIEB I
COMANDO ELEVATORE RICUPERO I
TRANSMISION DEL ELEVADOR DE RETRILLA I
RETURGODSELEVATORNS DRIVNING I

KEY	PART NO.	PART NAME	QTY	SERIAL NO.	975	975HY	REMARKS
1	Z10885	CHAIN SPROCKET	1		X	X	
2	34M7070	SPRING PIN	1		X	X	10 X 45 MM
3	34M7043	SPRING PIN	1		X	X	6 X 45 MM
4	JD39103	BALL BEARING	2		X	X	
5	Z38395	PRESSED FLANGED HOUSING	4		X	X	
6	AZ10045	ECCENTRIC LOCKING COLLAR	2		X	X	ASSY, INCL KEY 7
7	AZ19844	SET SCREW	2		X	X	KIT
8	Z33422	BRACKET	2		X	X	
9	19M8403	CAP SCREW	2		X	X	M8 X 75
10	14M7029	NUT	6		X	X	M8
11	03M7054	BOLT	4		X	X	M8 X 20
12	24M7036	WASHER	4		X	X	9 MM
13	14M7166	LOCK NUT	4		X	X	M8
14	Z33427	SPACER	2		X	X	
15	Z11210	CHAIN SPROCKET	1	- 017017	X		
	Z11211	CHAIN SPROCKET	1	017018 -	X	X	
16	Z33426	SHAFT	1		X	X	
17	49M4108	SHAFT KEY	1		X	X	8 X 7 X 32 MM
18	49M4106	SHAFT KEY	1		X	X	8 X 7 X 25 MM
19	03M7088	BOLT	6		X	X	M10 X 20
20	12M7013	LOCK WASHER	6		X	X	10 MM
21	14M7140	NUT	6		X	X	M10
22	Z26248	WASHER	2		X	X	

COPYRIGHT©1994 - 2008 DEERE & COMPANY Moline, Illinois All rights reserved

(4E20) TAILINGS AUGER AND ELEVATOR DRIVE II
COMMANDE D'ELEVATEUR D'OTONS II
UEBERKEHRELEVATOR-ANTRIEB II
COMANDO ELEVATORE RICUPERO II
TRANSMISION DEL ELEVADOR DE RETRILLA II
RETURGODSELEVATORNS DRIVNING II

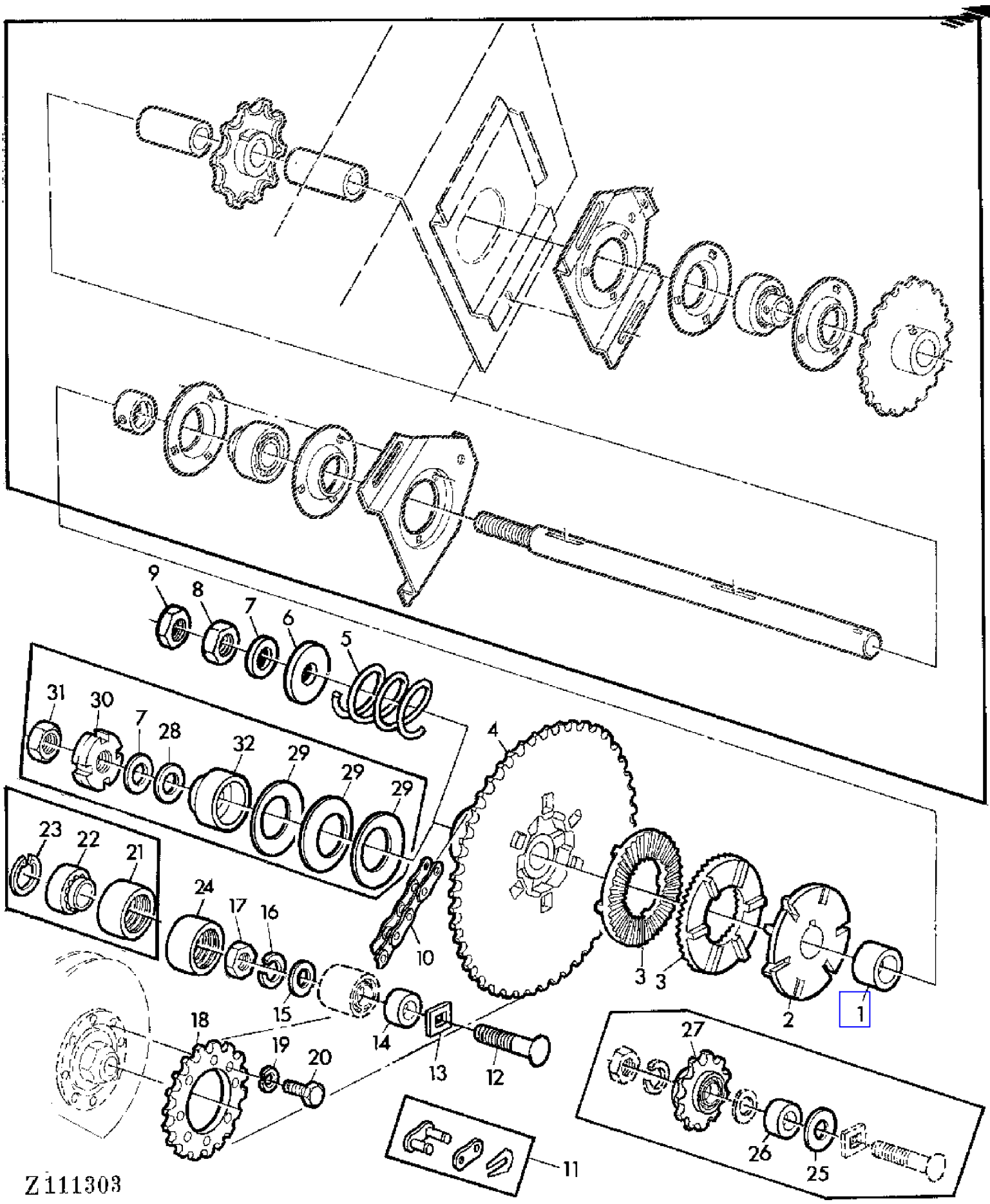

COPYRIGHT©1994 - 2008 DEERE & COMPANY Moline, Illinois All rights reserved

(4E20) TAILINGS AUGER AND ELEVATOR DRIVE II
COMMANDE D'ELEVATEUR D'OTONS II
UEBERKEHRELEVATOR-ANTRIEB II
COMANDO ELEVATORE RICUPERO II
TRANSMISION DEL ELEVADOR DE RETRILLA II
RETURGODSELEVATORNS DRIVNING II

KEY	PART NO.	PART NAME	QTY	SERIAL NO.			975	975HY/4	REMARKS
1	Z33428	SPACER	1				X	X	
2	Z10846	DRIVER	1				X	X	
3	Z10847	SLIP CLUTCH	2		-	016667	X		
	Z11184	SLIP CLUTCH	2	016668	-		X	X	
4	Z11540	CHAIN SPROCKET	1		-	016667	X	X	(SUB FOR Z10884) (ORD W/ KEY 5-9)
	Z11540	CHAIN SPROCKET	1	016668	-		X	X	
5	Z38293	COMPRESSION SPRING	1	016668	-		X	X	
6	24M7104	WASHER	1	016668	-		X	X	26 MM
7	24M7127	WASHER	1				X	X	25 X 44 X 4 MM
8	14M7143	NUT	1	016668	-		X	X	M24
9	14M7212	NUT	1	016668	-		X	X	M24
10	AZ22521	LINK CHAIN	1				X	X	L = 124, INCL KEY 11
11	AL14209	LINK	1				X	X	
12	03M7080	BOLT	1				X	X	M16 X 70
13	Z20737	WASHER	1				X	X	
14	Z38859	BUSHING	1	026723	-		X	X	
15	24M7053	WASHER	1				X	X	17 MM
16	12M7017	LOCK WASHER	1				X	X	16 MM
17	14M7142	NUT	1				X	X	M16
18	Z10883	CHAIN SPROCKET	1				X	X	
19	12M7013	LOCK WASHER	6				X	X	10 MM
20	19M7287	CAP SCREW	1				X	X	M10 X 50
21	Z24381	TIGHTENER	1				X	X	(ORD AZ36867)
22	JD30198	BALL BEARING	1				X	X	(FOR Z24381 APPL)
23	40M1865	SNAP RING	1				X	X	52 X 2 MM (FOR Z24381 APPL)
24	AZ36867	TIGHTENER	1	026723	-		X	X	ASSY (SUB FOR AZ28604)
25	24M7097	WASHER	1		-	026722	X	X	17 MM
26	Z29422	SPACER	1		-	026722	X	X	
27	AZ10272	CHAIN SPROCKET	1		-	026722	X	X	
28	Z31187	WASHER	1		-	016667	X		
29	Z29634	DISK SPRING	3		-	016667	X		
30	Z10776	NUT	1		-	016667	X		
31	14M7205	NUT	1		-	016667	X		M24
32	Z10775	THRUST WASHER	1		-	016667	X		

COPYRIGHT©1994 - 2008 DEERE & COMPANY Moline, Illinois All rights reserved

(4E12) TAILINGS ELEVATOR
ELEVATEUR D'OTONS
UEBERKEHRELEVATOR
ELEVATORE DI RICUPERO
ELEVADOR DE RETRILLA
RETURGODSELEVATOR

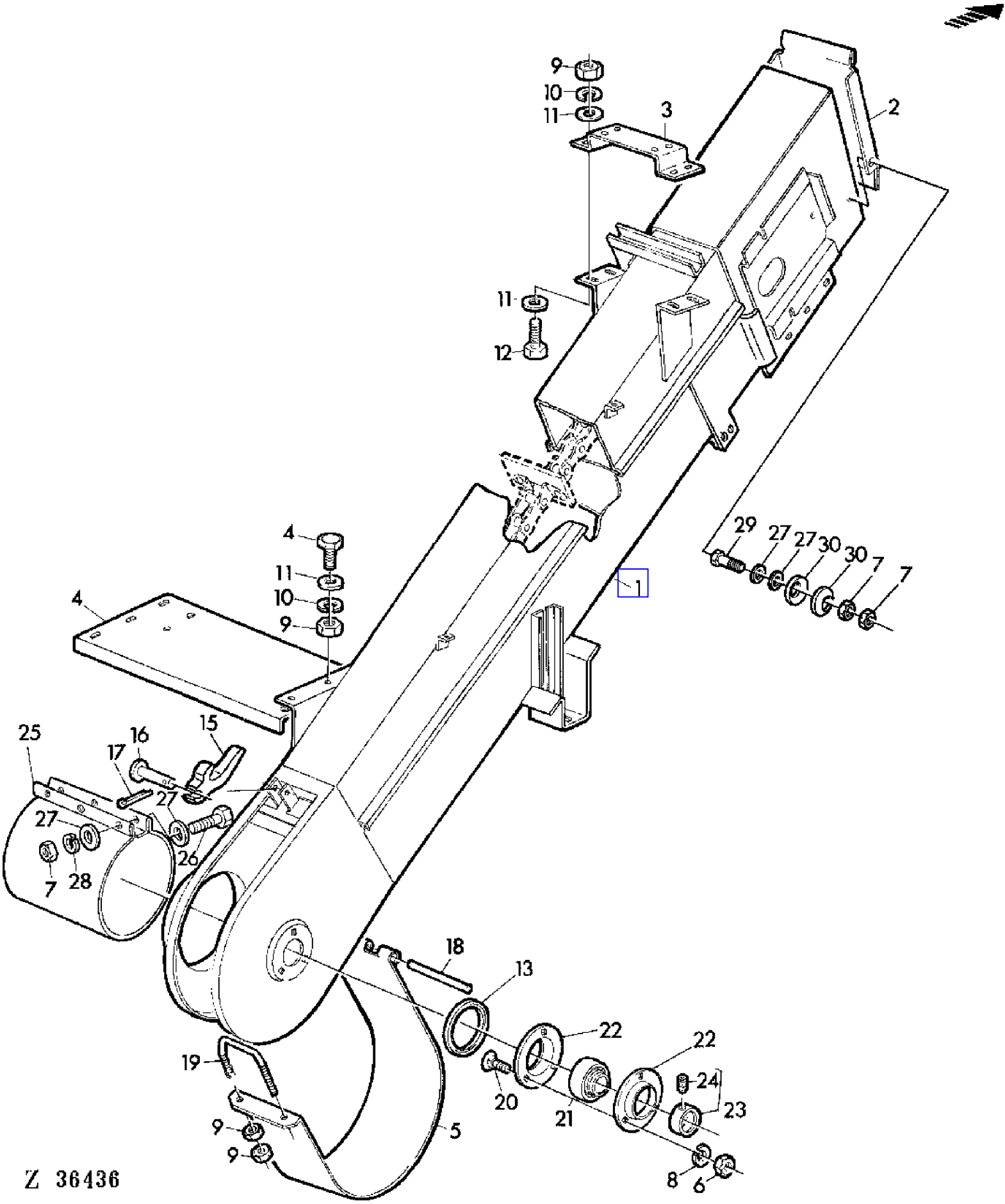

COPYRIGHT©1994 - 2008 DEERE & COMPANY Moline, Illinois All rights reserved

(4E12) TAILINGS ELEVATOR
ELEVATEUR D'OTONS
UEBERKEHRELEVATOR
ELEVATORE DI RICUPERO
ELEVADOR DE RETRILLA
RETURGODSELEVATOR

KEY	PART NO.	PART NAME	QTY	SERIAL NO.			975	975HY/4	REMARKS
1	AZ30612	ELEVATOR	1		-	016667	X		(SUB FOR AZ22518, AZ25456)
	AZ22518	HOUSING	1		-	008651	X		(ORD AZ30612 W/ AZ25442)
	AZ24923	HOUSING	1	008652	-	010731	X		(ORD AZ25456 W/ AZ25442)
	AZ25456	HOUSING	1	010732	-	016667	X		(ORD AZ30612 W/ AZ25442) (SUB FOR AZ24923)
	AZ30384	ELEVATOR	1	016668	-		X	X	(SUB FOR AZ26942)
2	Z33415	COVER	1				X	X	
3	Z34276	HOLDER	1				X	X	
4	Z33412	SHEET	1				X	X	
5	AZ10315	COVER	1		-	010731	X		(FOR AZ22518, AZ24923)
	AZ25442	COVER	1	010732	-		X	X	(FOR AZ25456, AZ30612)
6	14M7140	NUT	AR	016668	-		X	X	M10
7	14M7027	NUT	AR				X	X	M6
8	12M7013	LOCK WASHER	AR	016668	-		X	X	10 MM
9	14M7029	NUT	AR				X	X	M8
10	12M7008	LOCK WASHER	AR				X	X	8 MM
11	24M7036	WASHER	AR				X	X	9 MM
12	19M7163	CAP SCREW	AR				X	X	M8 X 25
13	Z37952	PACKING	1	016668	-		X	X	
14	19M7139	CAP SCREW	AR				X	X	M8 X 20
15	Z11406	LEVER	1				X	X	(SUB FOR H11360)
16	Z21059	PIN	1				X	X	
17	11M7009	COTTER PIN	AR				X	X	2 X 18 MM
18	Z20627	PIN	1				X	X	
19	Z20619	U-BOLT	1				X	X	
20	03M7090	BOLT	3		-	016667	X		M8 X 15
	03M7084	BOLT	AR	016668	-		X	X	M10 X 25
21	JD39102	BALL BEARING	1		-	016667	X		
	JD39103	BALL BEARING	1	016668	-		X	X	
22	P47232	PRESSED FLANGED HOUSING	2		-	016667	X		
	Z38395	PRESSED FLANGED HOUSING	2	016668	-		X	X	(SUB FOR P45502)
23	AZ10044	ECCENTRIC LOCKING COLLAR	1		-	016667	X		ASSY, INCL KEY 24
	AZ10045	ECCENTRIC LOCKING COLLAR	1	016668	-		X	X	
24	AZ19843	SET SCREW	1				X	X	KIT
25	Z20742	PIPE	1				X	X	(ORD AZ35685)
26	19M7286	CAP SCREW	AR				X	X	M6 X 25
27	Z26250	WASHER	AR				X	X	
28	12M7012	LOCK WASHER	AR				X	X	6 MM
29	19M7077	CAP SCREW	2				X	X	M6 X 20
30	Z41726	DISK SPRING	4				X	X	

COPYRIGHT©1994 - 2008 DEERE & COMPANY Moline, Illinois All rights reserved

(4B10) TENSION PULLEY (SEPARATOR)
GALET TENDEUR (ORGANES DE BATTAGE)
SPANNROLLE (DRESCHWERK)
PULEGGIA TENDITRICE (GRUPPI TREBBIANTI)
POLEA TENSORA (TRILLA)
SPANNRULLE (TROSKVERK)

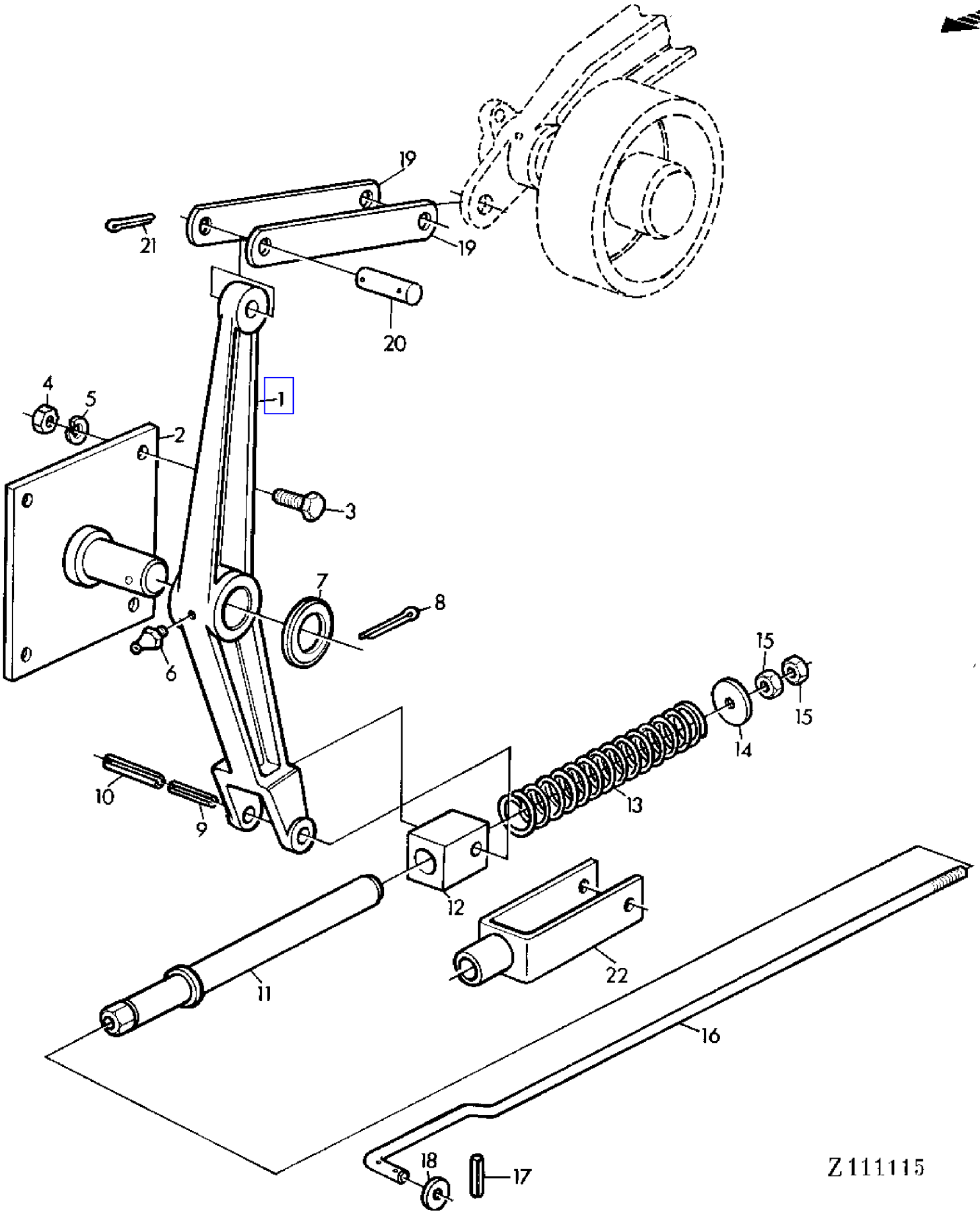

COPYRIGHT©1994 - 2008 DEERE & COMPANY Moline, Illinois All rights reserved

(4B10) TENSION PULLEY (SEPARATOR)
GALET TENDEUR (ORGANES DE BATTAGE)
SPANNROLLE (DRESCHWERK)
PULEGGIA TENDITRICE (GRUPPI TREBBIANTI)
POLEA TENSORA (TRILLA)
SPANNRULLE (TROSKVERK)

KEY	PART NO.	PART NAME	QTY	SERIAL NO.	975	975HY/4	REMARKS
1	Z10954	LEVER	1		X		
	Z11098	LEVER	1			X	
2	AZ23408	BRACKET	1		X	X	
3	19M7163	CAP SCREW	4		X	X	M8 X 25
4	14M7029	NUT	4		X	X	M8
5	12M7008	LOCK WASHER	4		X	X	8 MM
6	58M7005	LUBRICATION FITTING	1		X	X	M6
7	L18453	WASHER	4		X	X	
8	11M7022	COTTER PIN	1		X	X	4 X 30 MM
9	34M7030	SPRING PIN	2		X	X	5 X 20 MM
10	34M7061	SPRING PIN	2		X	X	8 X 20 MM
11	AZ19814	SLEEVE	1			X	
	AZ26211	SLEEVE	1			X	
12	Z22110	GUIDE	1			X	
13	Z22116	SPRING	1		X	X	
14	24M7102	WASHER	1		X	X	14 MM
15	14M7031	NUT	2		X	X	M12
16	Z34435	ROD	1		X		
	Z37263	ROD	1	- 018432		X	
	Z38826	ROD	1	018433 -		X	
17	34M7098	SPRING PIN	1		X	X	4 X 26 MM
18	24M7038	WASHER	1		X	X	14 MM
19	Z34431	PLATE	2		X	X	
20	44M7028	PIN	1		X	X	12 X 50 X 40 MM
21	11M7019	COTTER PIN	AR		X	X	4 X 20 MM
22	AZ26212	YOKE	1			X	

COPYRIGHT©1994 - 2008 DEERE & COMPANY Moline, Illinois All rights reserved

(4B12) TENSION ROLLER (SEPARATOR)
GALET TENDEUR (ORGANES DE BATTAGE)
SPANNROLLE (DRESCHWERK)
TENDITORE (SEPARATORE)
POLEA TENSORA (TRILLA)
SPANNRULLE (TROSKWERK)

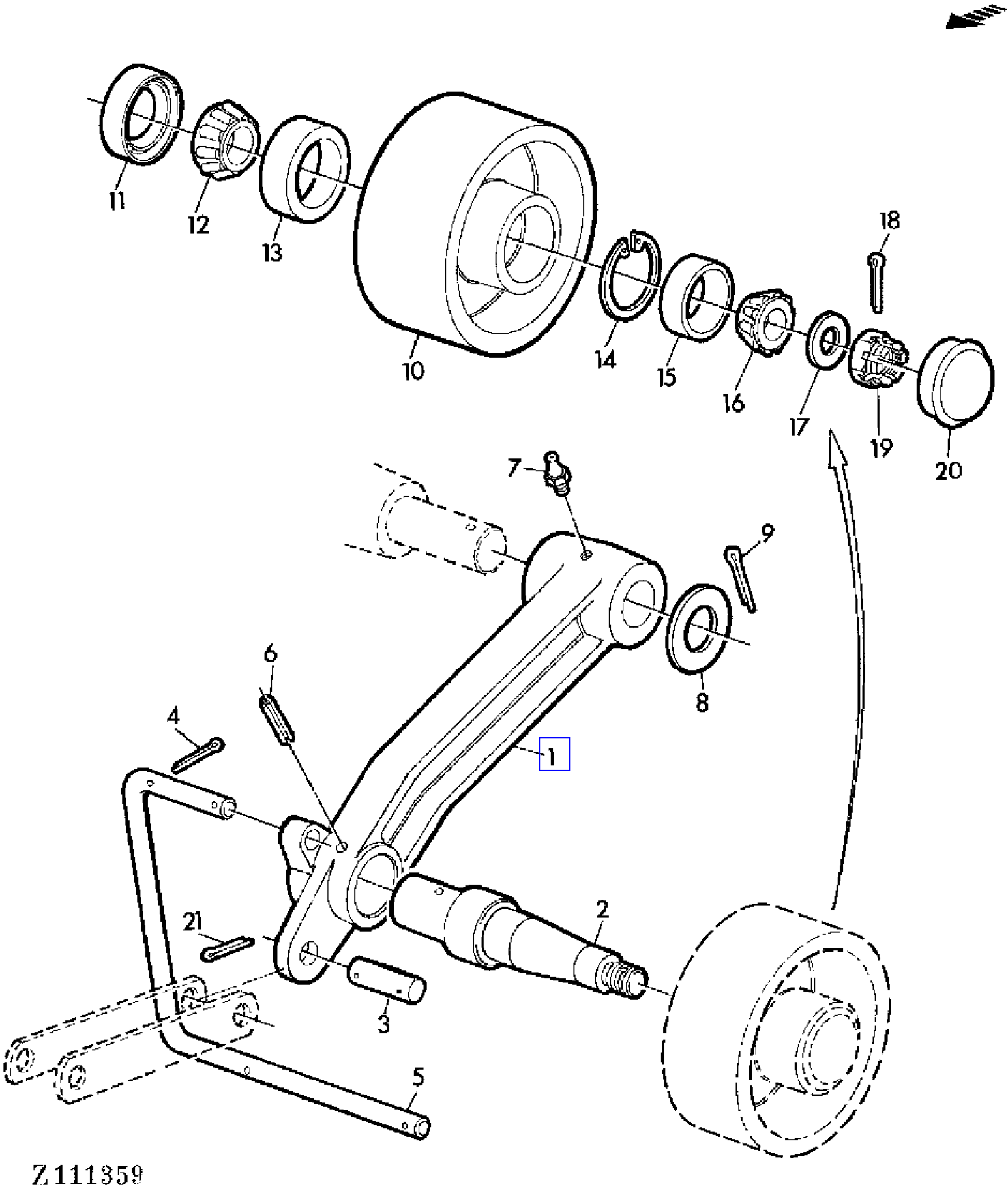

COPYRIGHT©1994 - 2008 DEERE & COMPANY Moline, Illinois All rights reserved

(4B12) TENSION ROLLER (SEPARATOR)
GALET TENDEUR (ORGANES DE BATTAGE)
SPANNROLLE (DRESCHWERK)
TENDITORE (SEPARATORE)
POLEA TENSORA (TRILLA)
SPANNRULLE (TROSKWERK)

KEY	PART NO.	PART NAME	QTY	SERIAL NO.	975	975HY/4	REMARKS
1	AZ23402	LEVER	1		X	X	ASSY, INCL KEYS 2,6
2	Z33797	SHAFT	1		X	X	
3	44M7028	PIN	1		X	X	12 X 50 X 40 MM
4	11M7013	COTTER PIN	4		X	X	3 X 20 MM
5	Z34432	BAIL	1		X	X	
6	34M7043	SPRING PIN	1		X	X	6 X 45 MM
7	58M7004	LUBRICATION FITTING	1		X	X	6 MM
8	24M7091	WASHER	1		X	X	26 MM
9	11M7037	COTTER PIN	1		X	X	6 X 40 MM
10	Z10669	IDLER	1		X	X	
11	AZ12215	SEAL	1		X	X	
12	JD8187	BEARING CONE	1		X	X	
13	JD8225	BEARING CUP	1		X	X	
14	40M1862	SNAP RING	1		X	X	45 X 1,75 MM
15	JD8226	BEARING CUP	1		X	X	
16	JD8188	BEARING CONE	1		X	X	
17	24M7053	WASHER	1		X	X	17 MM
18	11M7012	COTTER PIN	1		X	X	3 X 18 MM
19	14M7179	NUT	1		X	X	M16 X 1,5
20	Z9769H	CAP	1		X	X	
21	11M7019	COTTER PIN	AR		X	X	4 X 20 MM

COPYRIGHT©1994 - 2008 DEERE & COMPANY Moline, Illinois All rights reserved

(1E02) THROTTLE AND ENGINE SHUT-OFF LINKAGE
TRINGLERIE D'ACCELERATION ET D'ARRET
GAS-UND STOPPGESTAENGE
LEVERAGGI ACCELERAZIONE E ARRESTO
VARILLAJE DE PARADA Y ACELERACION DEL MOTOR
GAS-OCH STOPPREGLAGE

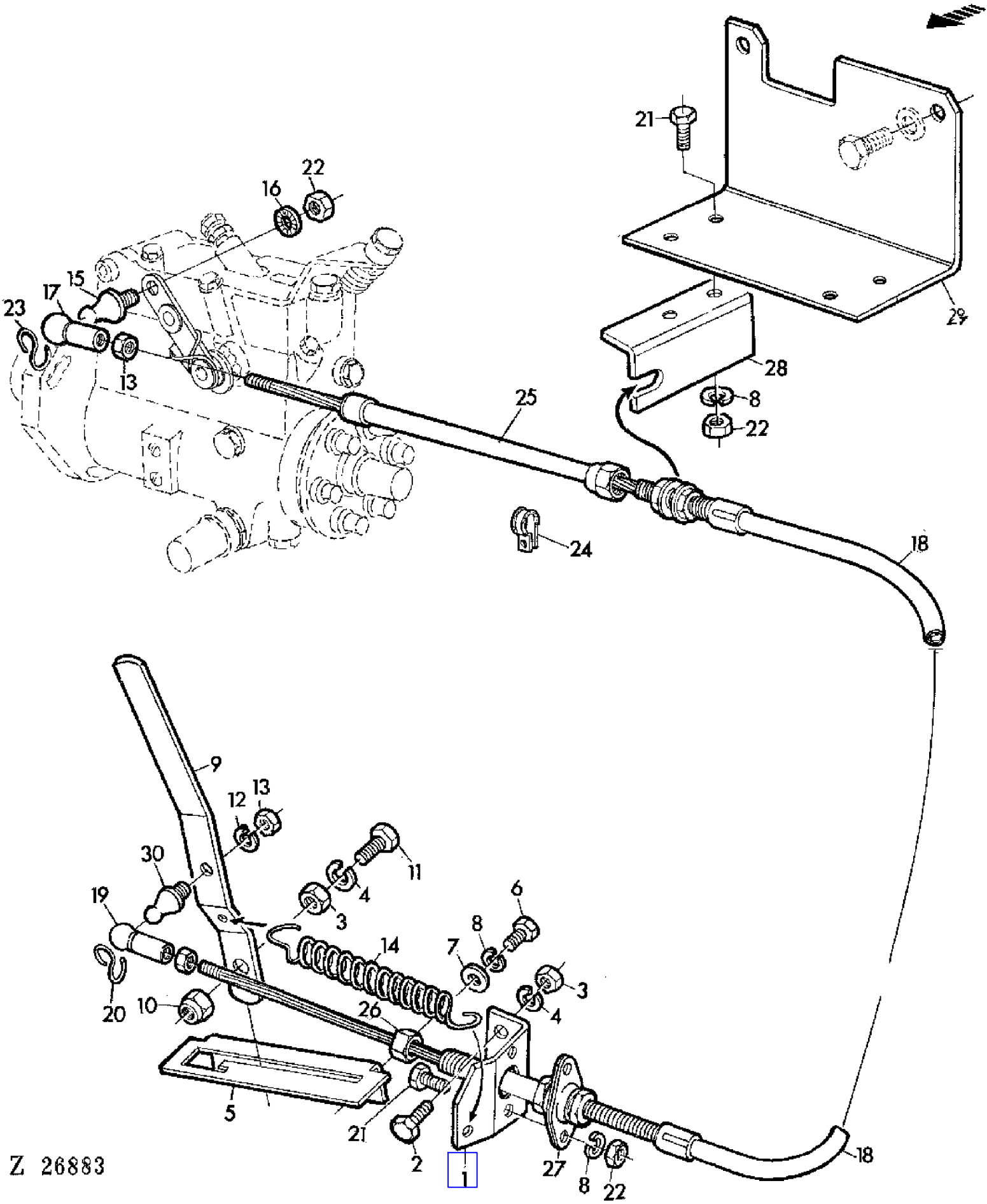

COPYRIGHT©1994 - 2008 DEERE & COMPANY Moline, Illinois All rights reserved

(1E02) THROTTLE AND ENGINE SHUT-OFF LINKAGE
TRINGLERIE D'ACCELERATION ET D'ARRET
GAS-UND STOPPGESTAENGE
LEVERAGGI ACCELERAZIONE E ARRESTO
VARILLAJE DE PARADA Y ACELERACION DEL MOTOR
GAS-OCH STOPPREGLAGE

KEY	PART NO.	PART NAME	QTY	SERIAL NO.	975	975HY/4	REMARKS
1	Z34112	HOLDER	1		X	X	
2	19M7284	CAP SCREW	AR		X	X	M8 X 18
3	14M7029	NUT	AR		X	X	M8
4	12M7008	LOCK WASHER	AR		X	X	8 MM
5	AZ23655	PLATE	1		X	X	
6	19M6614	CAP SCREW	AR		X	X	M6 X 12
7	24M7088	WASHER	AR		X	X	6,6 MM
8	12M7012	LOCK WASHER	AR		X	X	6 MM
9	Z34113	LEVER	1		X	X	
10	14M7166	LOCK NUT	AR		X	X	M8
11	19M7377	CAP SCREW	1		X	X	M8 X 28
12	12M7011	LOCK WASHER	AR		X	X	5 MM
13	14M7028	NUT	2		X	X	M5
14	L12259	SPRING	1		X	X	
15	55M4430	BALL STUD	1		X	X	10 MM
16	12M7062	LOCK WASHER	AR		X	X	6 MM
17	AZ23653	BALL JOINT SOCKET	1		X	X	
18	AZ22970	PUSH PULL CABLE	1		X	X	ASSY, INCL KEYS 25,26,27
19	56M5259	BALL JOINT SOCKET	1		X	X	8 MM
20	56M5258	BALL JOINT RETAINER	1		X	X	SB
21	19M7375	CAP SCREW	AR		X	X	M6 X 18
22	14M7027	NUT	AR		X	X	M6
23	56M7005	BALL JOINT RETAINER	1		X	X	S10
24	Z34587	CLAMP	3		X	X	
25	AZ23657	ADJUSTER	1		X	X	
26	AZ23697	NUT	1		X	X	
27	AZ21204	BALL JOINT	1		X	X	
28	Z34800	HOLDER	1		X	X	
29	Z34801	HOLDER	1		X	X	
30	55M7003	BALL STUD	1		X	X	8 MM

COPYRIGHT©1994 - 2008 DEERE & COMPANY Moline, Illinois All rights reserved

(1B04) TIMING GEAR COVER
COUVERCLE DE DISTRIBUTION
STEUERGEHAEUSE
CARTER DELLA DISTRIBUZIONE
TAPA DE LA DISTRIBUCION
TIDHJULSKAPA

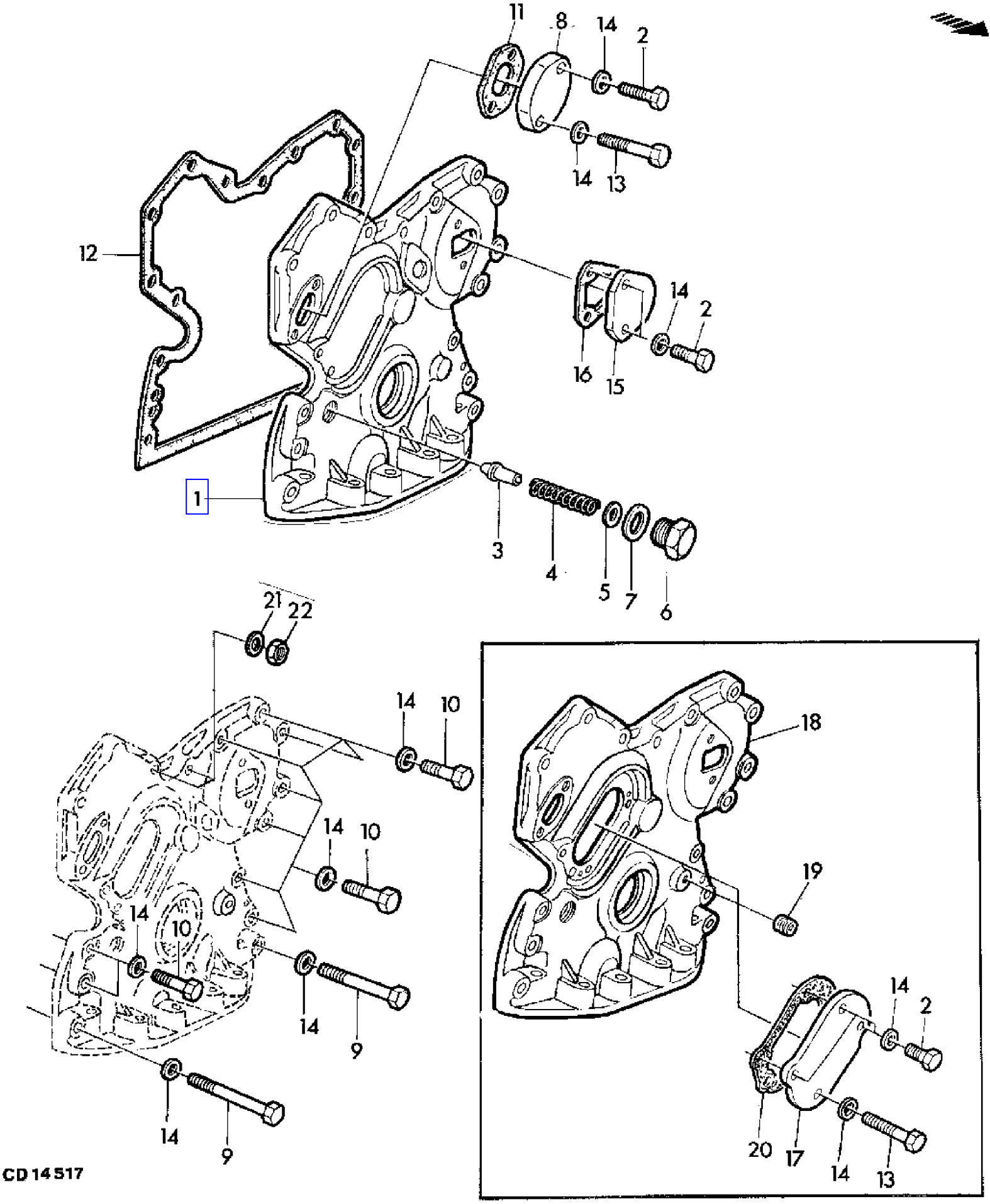

COPYRIGHT©1994 - 2008 DEERE & COMPANY Moline, Illinois All rights reserved

(1B04) TIMING GEAR COVER
COUVERCLE DE DISTRIBUTION
STEUERGEHAEUSE
CARTER DELLA DISTRIBUZIONE
TAPA DE LA DISTRIBUCION
TIDHJULSKAPA

KEY	PART NO.	PART NAME	QTY	ENGINE SERIAL NO.			975	975HY/4	REMARKS
1	AR97707	COVER	1	498386	-		X	X	(SUB FOR AT19509)
2	19H2284	CAP SCREW	6		-	498385	X	X	3/8" X 7/8"
	19H2284	CAP SCREW	3	498386	-		X	X	3/8" X 7/8"
3	R83169	VALVE	1				X	X	(SUB FOR R51516)
4	T27658	SPRING	1				X	X	
5	24H1290	WASHER	AR				X	X	21/64" X 3/4" X .036"
6	T27657	FITTING PLUG	1				X	X	
7	A4827R	WASHER	1				X	X	1" X 1-1/4" X 0.064"
8	T23260	COVER	1				X	X	
9	19H268	CAP SCREW	2				X	X	3/8" X 2-1/2"
10	19H1801	CAP SCREW	10				X	X	3/8" X 2"
11	T20336	GASKET	1				X	X	
12	T20155	GASKET	1				X	X	
13	19H1726	CAP SCREW	2		-	498385	X	X	3/8" X 2-1/4"
	19H1726	CAP SCREW	1	498386	-		X	X	3/8" X 2-1/4"
14	24H1304	WASHER	AR				X	X	13/32" X 23/32" X .120"
15	T20362	COVER	1				X	X	
16	R69260	GASKET	1				X	X	(SUB FOR T20364)
17	T20272	COVER	1		-	498385	X	X	
18	AR58196	COVER	1		-	498385	X	X	(ORD W/ KEYS 14,17,19-22)
19	15H275	PIPE PLUG	1		-	498385	X	X	1/4"
20	T20273	GASKET	1		-	498385	X	X	
21	24H1303	WASHER	2				X	X	13/32" X 11/16" X .060"
22	14H1076	NUT	2				X	X	3/8"

COPYRIGHT©1994 - 2008 DEERE & COMPANY Moline, Illinois All rights reserved

(2F14) TOOL BOX WITH SUPPORT
BOITE A QUTILS ET SUPPORT
WERKZEUGKASTEN MIT HALTER
SCATOLA ATTREZZI E SUPPORTO
CAJA DE HERRAMIENTAS CON SOPORTE
VERKTYGSLADA MED KONSOLL

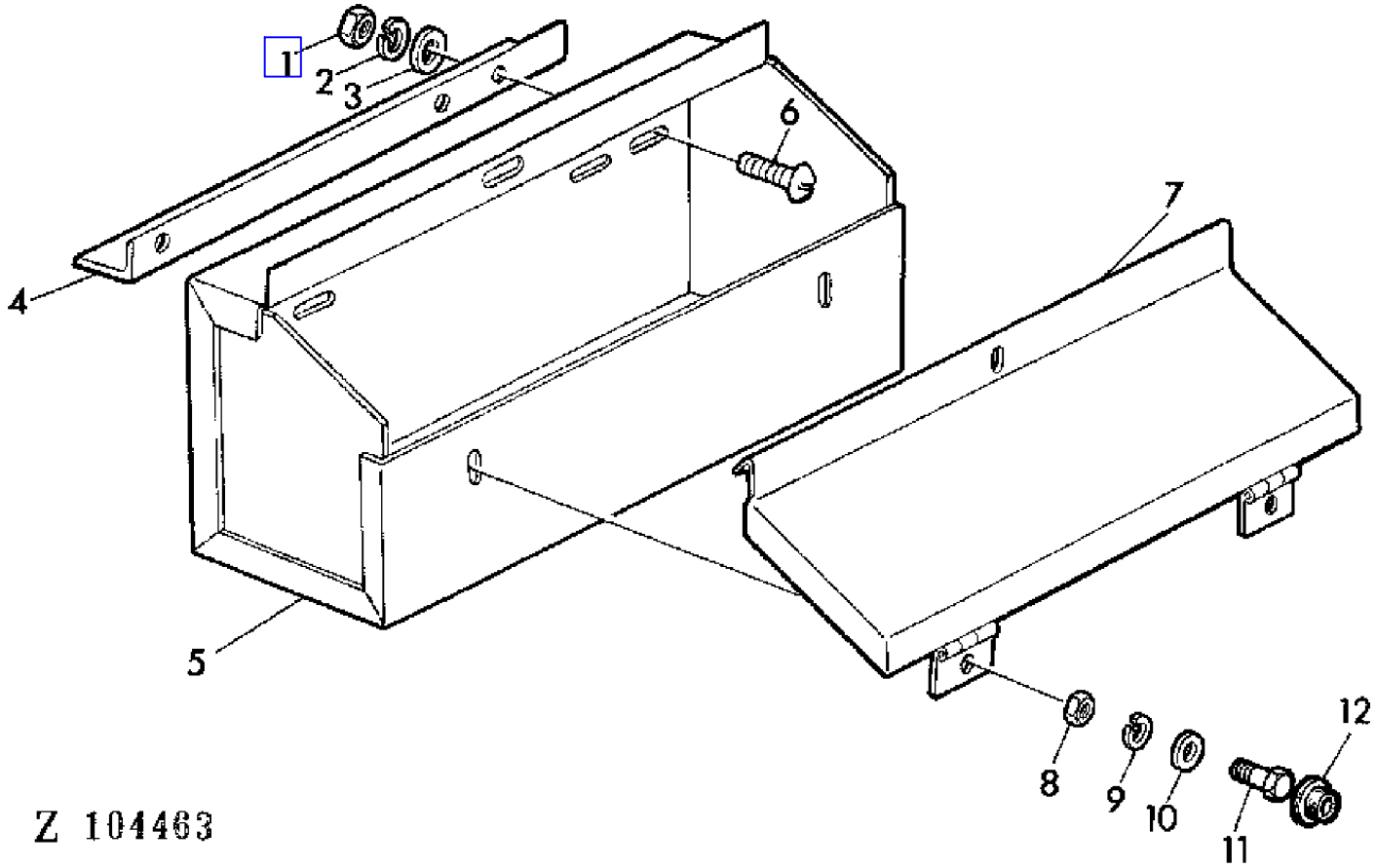

COPYRIGHT©1994 - 2008 DEERE & COMPANY Moline, Illinois All rights reserved

(2F14) TOOL BOX WITH SUPPORT
BOITE A QUTILS ET SUPPORT
WERKZEUGKASTEN MIT HALTER
SCATOLA ATTREZZI E SUPPORTO
CAJA DE HERRAMIENTAS CON SOPORTE
VERKTYGSLADA MED KONSOLL

KEY	PART NO.	PART NAME	QTY	SERIAL NO.	975	975HY/4	REMARKS
1	14M7029	NUT	3		X	X	M8
2	12M7008	LOCK WASHER	3		X	X	8 MM
3	24M7036	WASHER	3		X	X	9 MM
4	Z34718	ANGLE	1		X	X	
5	AZ37936	TOOLBOX	1		X	X	INCL KEYS 7-12 (SUB FOR AZ24009, AZ33140)
6	21M7089	SCREW	3		X	X	M8 X 20
7	AZ13745	COVER	1		X	X	
8	14M7027	NUT	2		X	X	M6
9	12M7012	LOCK WASHER	2		X	X	6 MM
10	24M7088	WASHER	2		X	X	6 MM
11	19M7077	CAP SCREW	2		X	X	M6 X 20
12	Z26168	PLUG	2		X	X	

COPYRIGHT©1994 - 2008 DEERE & COMPANY Moline, Illinois All rights reserved

(2H05) TOOLS AND SERVICE BOX
OUTILS BOITE DE PIECES DE RECHANGE
WERKZEUGE UND ERSATZKASTEN
ATTREZZI E CASETTA CON PARTI DI RICAMBIO
HERRAMIENTAS Y CAJA DE PIEZAS DE RECAMBIO
VERKTYG OCH REPARATIONSSATS

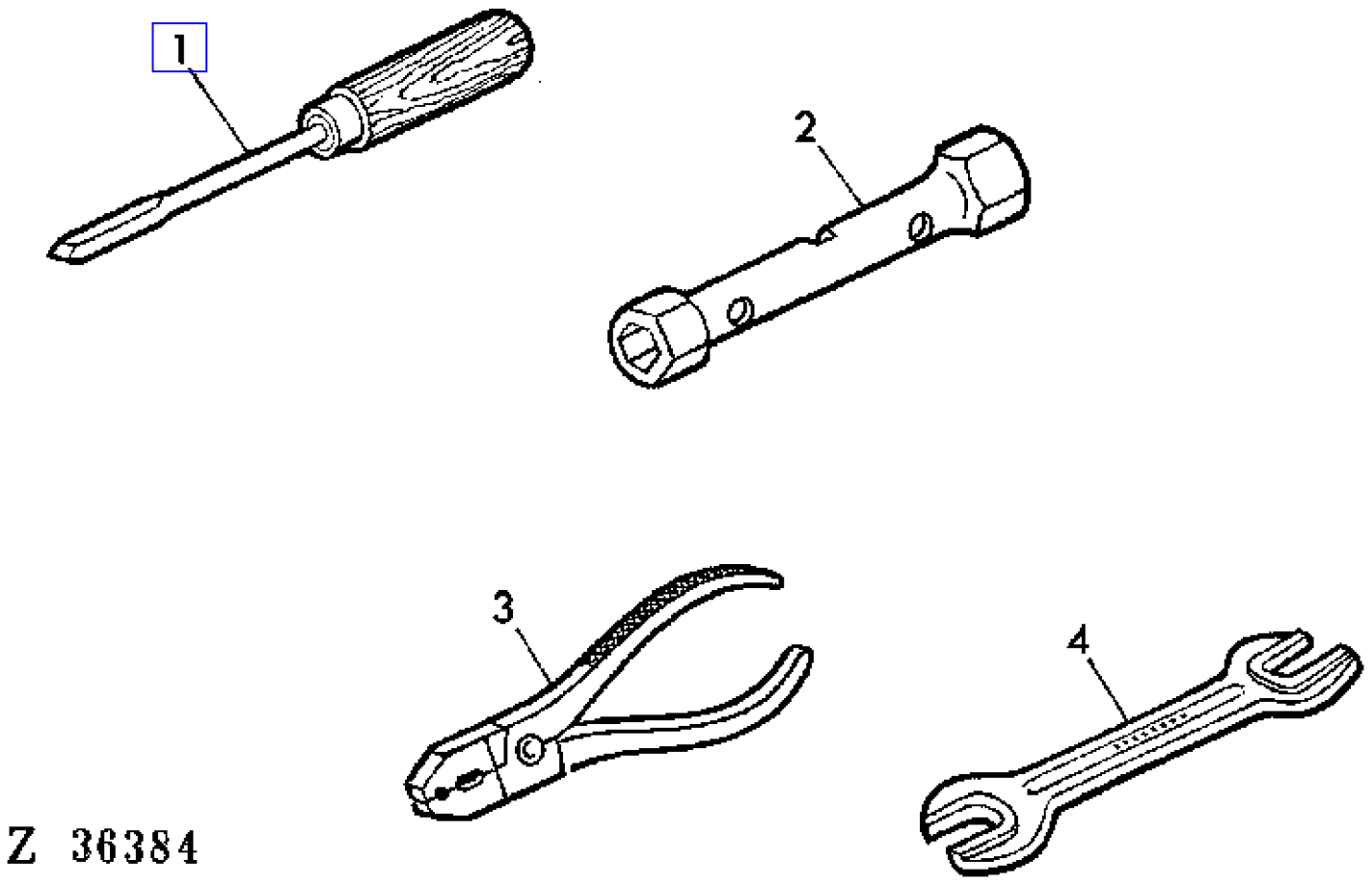

COPYRIGHT©1994 - 2008 DEERE & COMPANY Moline, Illinois All rights reserved

(2H05) TOOLS AND SERVICE BOX
OUTILS BOITE DE PIECES DE RECHANGE
WERKZEUGE UND ERSATZKASTEN
ATTREZZI E CASETTA CON PARTI DI RICAMBIO
HERRAMIENTAS Y CAJA DE PIEZAS DE RECAMBIO
VERKTYG OCH REPARATIONSSATS

KEY	PART NO.	PART NAME	QTY	SERIAL NO.	975	975HY/4	REMARKS
1	AZ12802	SCREWDRIVER	1		X	X	A1
2	31M5217	TOOL	1		X	X	19 X 22
3	AZ12801	TOOL	1		X	X	LGTH = 160 MM
4	31M6768	WRENCH	1		X	X	10 X 13
	31M5223	WRENCH	1		X	X	14 X 17
	31M5224	WRENCH	1		X	X	17 X 19
	31M5226	WRENCH	1		X	X	19 X 24
	31M5228	WRENCH	1		X	X	24 X 27
	31M6439	WRENCH	1		X	X	30 X 36

COPYRIGHT©1994 - 2008 DEERE & COMPANY Moline, Illinois All rights reserved

(2E20) TRAILER DRAWBAR
CROCHET DE REMORQUE
ANHAENGEBOCK
ATTACCO RIMORCHIO
ENGANCHE DE TIRO
VAGNSDRAG

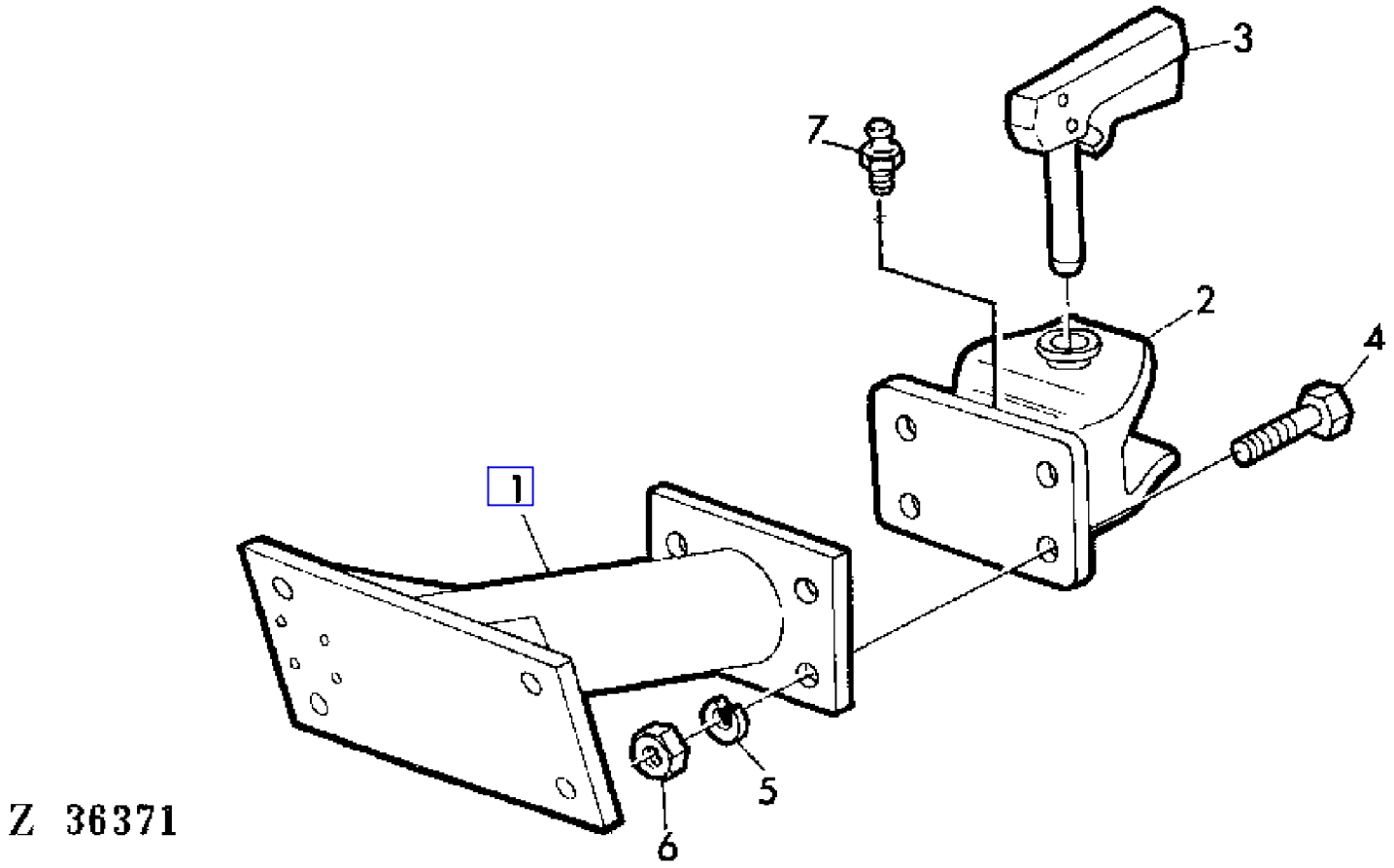

COPYRIGHT©1994 - 2008 DEERE & COMPANY Moline, Illinois All rights reserved

(2E20) TRAILER DRAWBAR
CROCHET DE REMORQUE
ANHAENGEBOCK
ATTACCO RIMORCHIO
ENGANCHE DE TIRO
VAGNSDRAG

KEY	PART NO.	PART NAME	QTY	SERIAL NO.	975	975HY/4	REMARKS
1	AZ20486	BRACKET	1		X	X	
2	AZ15018	HITCH	1		X	X	
3	AZ15017	PIN	1		X	X	
4	19M7403	CAP SCREW	4		X	X	M12 X 35
5	12M7014	LOCK WASHER	4		X	X	12 MM
6	14M7031	NUT	4		X	X	M12
7	58M7004	LUBRICATION FITTING	1		X	X	6 X 1 MM

COPYRIGHT©1994 - 2008 DEERE & COMPANY Moline, Illinois All rights reserved

(2E02) TRANSMISSION BRAKE
FREIN DE BOITE
GETRIEBEBREMSE
FRENO DI TRANSMISSIONE
FRENO DE TRANSMISION
VAXELLADANS BROMS

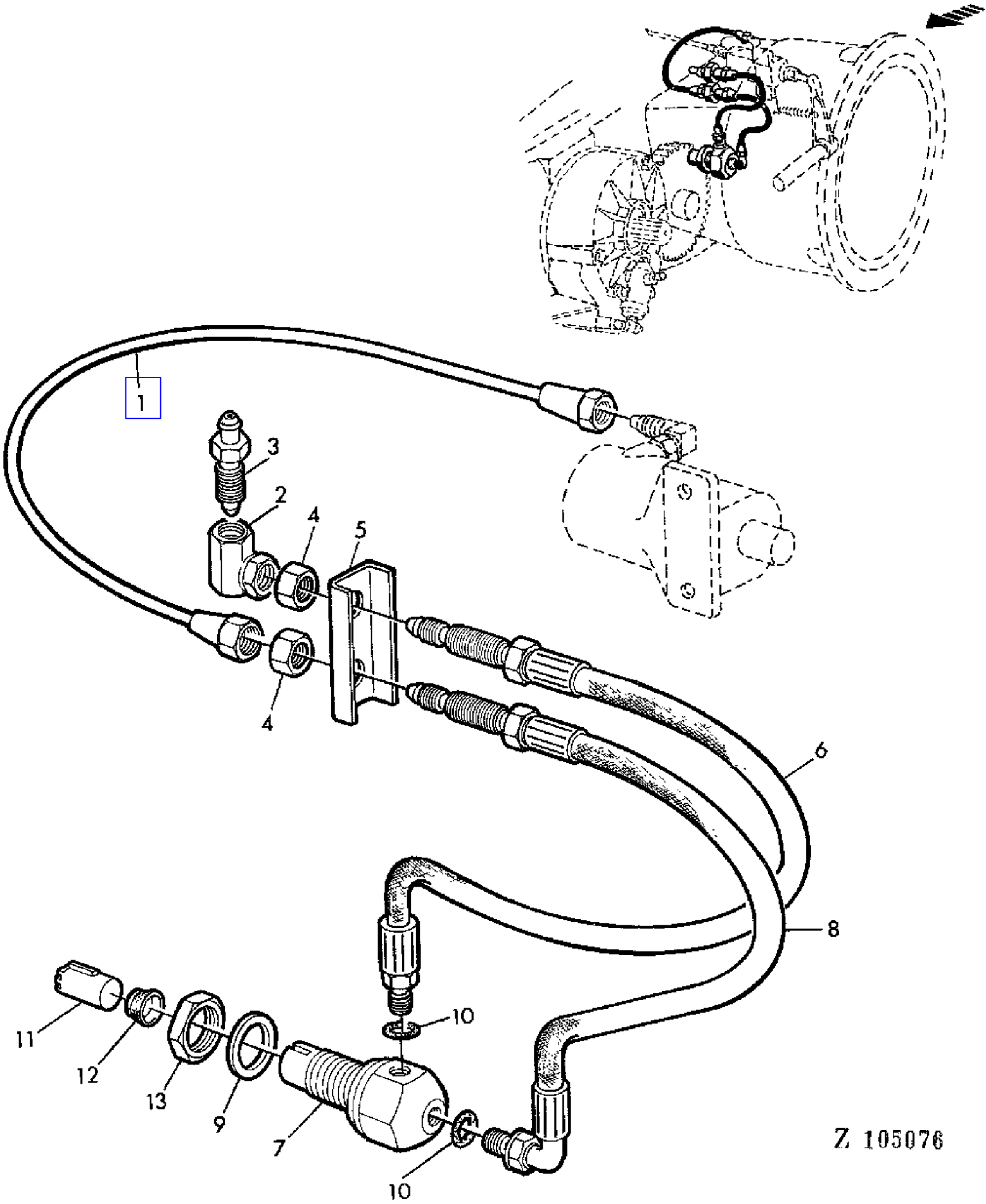

COPYRIGHT©1994 - 2008 DEERE & COMPANY Moline, Illinois All rights reserved

(2E02) TRANSMISSION BRAKE
FREIN DE BOITE
GETRIEBEBREMSE
FRENO DI TRANSMISSIONE
FRENO DE TRANSMISION
VAXELLADANS BROMS

KEY	PART NO.	PART NAME	QTY	SERIAL NO.	975	975HY/4	REMARKS
1	AZ27755	OIL LINE	1		X		
	AZ27756	OIL LINE	1		X		(A)
2	AZ34990	ELBOW FITTING	1		X		(SUB FOR Z43627)
3	R21612	BLEED SCREW	1		X		
4	14M7031	NUT	2		X		M12
5	Z43628	CHANNEL	1		X		
6	AZ33681	HYDRAULIC HOSE	1		X		(SUB FOR AZ27754, Z39045)
7	Z38526	COUPLING	1		X		
8	AZ33682	HYDRAULIC HOSE	1		X		(SUB FOR AZ27753, Z39045)
9	51M4467	RING	1		X		
10	R26287	O-RING	2		X		
11	Z38559	PISTON	1		X		
12	Z38521	BOOT	1		X		
13	Z38523	NUT	1		X		

(A) WITH REVERMATIC
AVEC REVERMATIC
BEI REVERMATIC
CON REVERMATIC
CON REVERMATIC
VID REVERMATIC

COPYRIGHT©1994 - 2008 DEERE & COMPANY Moline, Illinois All rights reserved

(1I13) TRANSMISSION CASE
CARTER DE BOITE
GETRIEBEGEHAEUSE
SCATOLA CAMBIO
CAJA DE LA TRANSMISION
VAXELLADA

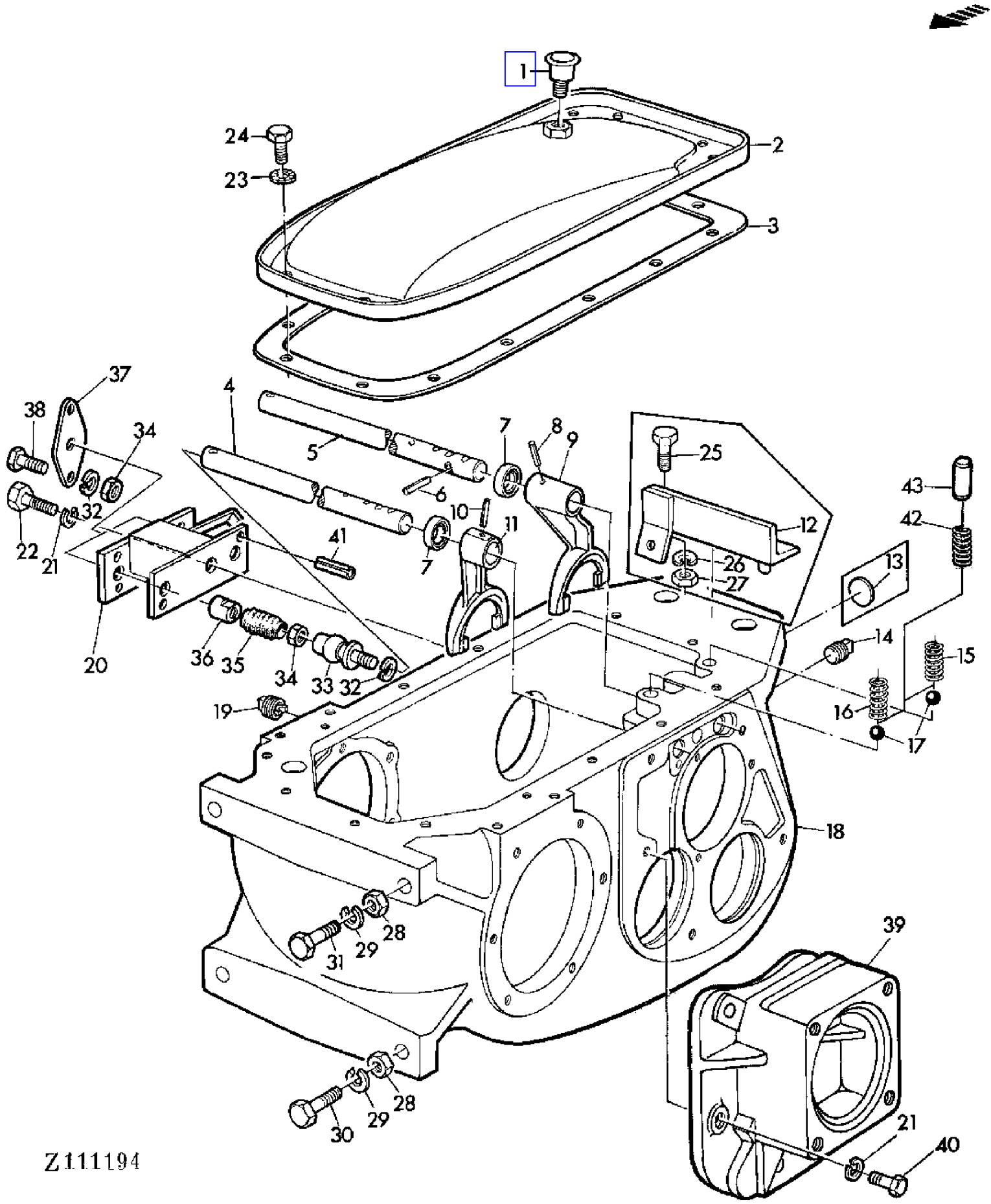

COPYRIGHT©1994 - 2008 DEERE & COMPANY Moline, Illinois All rights reserved

(1I13) TRANSMISSION CASE
CARTER DE BOITE
GETRIEBEGEHAEUSE
SCATOLA CAMBIO
CAJA DE LA TRANSMISION
VAXELLADA

KEY	PART NO.	PART NAME	QTY	SERIAL NO.	975	975HY/4	REMARKS
1	AH20868	BREATHER	1		X	X	
2	AH20867	COVER	1		X	X	
3	P48666	GASKET	1		X	X	
4	Z32602	SHIFTER ROD	1		X	X	
5	Z38012	SHIFTER ROD	1		X	X	(SUB FOR Z32601)
6	H33500	COTTER PIN	1		X	X	
7	AP19599	SEAL	1		X	X	
8	34H92	SPRING PIN	1		X	X	7/32" X 1/2"
9	Z11298	SHIFTER	1		X	X	(SUB FOR H11479)
10	34H89	SPRING PIN	1		X	X	7/32" X 1-1/8"
11	Z11299	SHIFTER	1		X	X	(SUB FOR PK1826H)
12	AZ18543	HOLDER	1	- 017447	X		
13	30H7	PLUG	1	- 017017	X		
14	15H238	PIPE PLUG	1		X	X	3/4"
15	Z38439	COMPRESSION SPRING	1		X	X	(ORD T24527, Z47982) (SUB FOR H75252)
16	Z43922	COMPRESSION SPRING	1		X	X	(SUB FOR H75251, Z38438) (ORD T24527, Z47982)
17	405RH	BALL	2		X	X	
18	Z11175	TRANSMISSION CASE	1		X	X	(SUB FOR Z10704)
19	AH18240	HOSE FITTING	1		X	X	
20	AZ21468	SUPPORT	1	- 017447	X		
	AZ25875	SUPPORT	1	017448 -	X	X	
21	H20551	LOCK WASHER	1		X	X	
22	19H1822	CAP SCREW	1		X	X	7/16" X 1"
23	12M7032	LOCK WASHER	14		X	X	
24	19H1813	CAP SCREW	14		X	X	5/16" X 5/8"
25	19M7520	CAP SCREW	AR	- 017447	X		M18 X 45
26	12M5846	LOCK WASHER	AR	- 017447	X		18 MM
27	14M7204	NUT	AR	- 017447	X		M18
28	14H809	NUT	4		X	X	1/2"
29	12H301	LOCK WASHER	4		X	X	1/2"
30	19H1831	CAP SCREW	2	- 014887	X		1/2" X 2"
	19H1805	CAP SCREW	2	014888 -	X	X	1/2" X 2-1/4"
31	H61990	CAP SCREW	2	- 014887	X		
	Z37855	CAP SCREW	2	014888 -	X	X	
32	12M7012	LOCK WASHER	4		X	X	6 MM
33	AZ21471	BALL STUD	2		X	X	6 MM
34	14M7027	NUT	4		X	X	M6
35	Z32405	BOOT	2		X	X	
36	AZ21203	NUT	2		X	X	
37	AZ21204	BALL JOINT	4		X	X	
38	19M7375	CAP SCREW	4		X	X	M6 X 18
39	H64038	HOUSING	1			X	

COPYRIGHT©1994 - 2008 DEERE & COMPANY Moline, Illinois All rights reserved

(1I13) TRANSMISSION CASE
CARTER DE BOITE
GETRIEBEGEHAEUSE
SCATOLA CAMBIO
CAJA DE LA TRANSMISION
VAXELLADA

KEY	PART NO.	PART NAME	QTY	SERIAL NO.	975	975HY/4	REMARKS
40	19H1821	CAP SCREW	AR			X	7/16" X 1-1/4"
41	34M7038	SPRING PIN	2	017448 -	X	X	6 X 20 MM
42	T24527	SPRING	2		X	X	
43	Z47982	PIN	2		X	X	

COPYRIGHT©1994 - 2008 DEERE & COMPANY Moline, Illinois All rights reserved

(1I15) TRANSMISSION GEARS
PIGNONS DE BOITE
GETRIEBERAEDER
INGRANAGGI DEL CAMBIO
ENGRANAJES DEL CAMBIO
TRANSMISSIONSHJUL

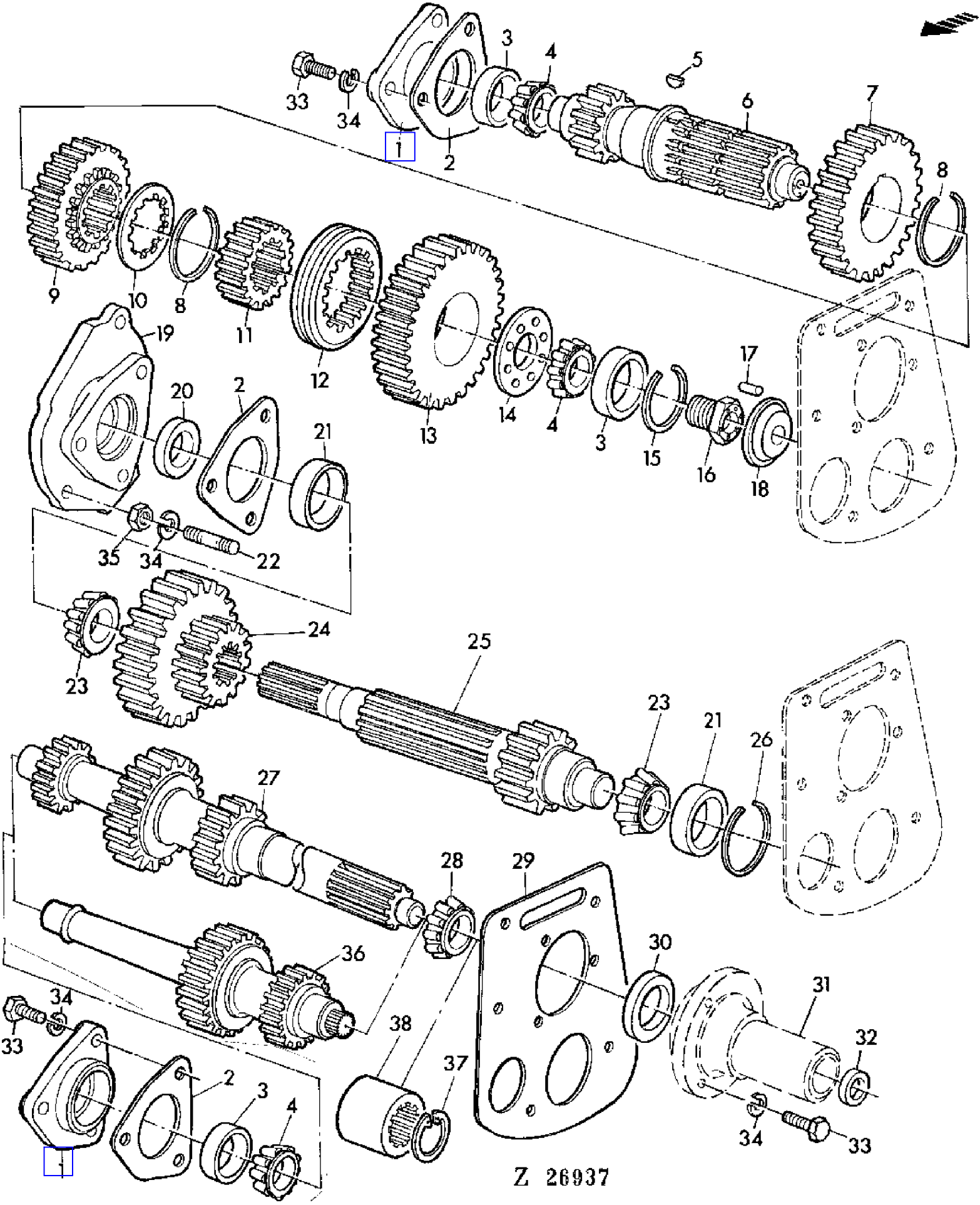

COPYRIGHT©1994 - 2008 DEERE & COMPANY Moline, Illinois All rights reserved

(1I15) TRANSMISSION GEARS
PIGNONS DE BOITE
GETRIEBERAEDER
INGRANAGGI DEL CAMBIO
ENGRANAJES DEL CAMBIO
TRANSMISSIONSHJUL

KEY	PART NO.	PART NAME	QTY	SERIAL NO.	975	975HY/4	REMARKS
1	H10163	HOUSING	2		X	X	
2	P49116	SHIM	AR		X	X	0.002"
	P48652	SHIM	AR		X	X	0.003"
	P49117	SHIM	AR		X	X	0.005"
	P49118	SHIM	AR		X	X	0.010"
	P49119	SHIM	AR		X	X	0.020"
3	JD7449	BEARING CUP	3		X	X	
4	JD8134	BEARING CONE	3		X	X	
5	26H23	SHAFT KEY	1		X	X	
6	H64031	SHAFT	1		X		
	H64032	JACKSHAFT	1			X	
7	H33491	GEAR	1		X	X	
8	R26266	SNAP RING	2		X	X	
9	H75179	GEAR	1		X	X	
10	H103167	WASHER	1		X	X	(SUB FOR H64035)
11	R26255	GEAR	1		X	X	
12	H82165	SYNCHRONIZER	1		X	X	
13	H75180	GEAR	1		X		
	Z31530	GEAR	1			X	
14	Z40172	THRUST WASHER	1		X	X	(SUB FOR H35906)
15	P42669	RING	1		X	X	
16	H64036	BOLT	1		X	X	
17	34H245	SPRING PIN	1		X	X	1/8" X 5/8"
18	H64037	SHIELD	1		X	X	
19	H11496	HOUSING	1		X	X	
20	AH21815	SEAL	1		X	X	
21	JD7424	BEARING CUP	2		X	X	
22	L851TH	STUD	3		X	X	
23	JD8100	BEARING CONE	2		X	X	
24	H32057	GEAR	1		X		
	H62815	GEAR	1			X	
25	H36519	SHAFT	1		X	X	
26	P46356	RING	1		X	X	
27	Z10928	SHAFT	1		X		
28	JD8179	BEARING CONE	1		X		
	JD7207	BEARING CONE	1			X	
29	Z45228	GASKET	1		X	X	(SUB FOR H64042, Z38278)
30	JD8220	BEARING CUP	1		X		
	JD7409	BEARING CUP	1			X	
31	.....	HUB	1		X		(ORD Z10974)
32	AZ19023	SEAL	1		X		
33	19H1821	CAP SCREW	9		X	X	7/16" X 1-1/4"

COPYRIGHT©1994 - 2008 DEERE & COMPANY Moline, Illinois All rights reserved

(1I15) TRANSMISSION GEARS
PIGNONS DE BOITE
GETRIEBERAEDER
INGRANAGGI DEL CAMBIO
ENGRANAJES DEL CAMBIO
TRANSMISSIONSHJUL

KEY	PART NO.	PART NAME	QTY	SERIAL NO.	975	975HY	REMARKS
34	H20551	LOCK WASHER	12		X	X	12 MM
35	14H807	NUT	3		X	X	7/16"
36	H62816	SHAFT	1		X		
37	T23694	SNAP RING	1		X		
38	H99060	SPLINED COUPLING	1		X		

COPYRIGHT©1994 - 2008 DEERE & COMPANY Moline, Illinois All rights reserved

(2E18) TRAVERSE BRACKET AND SUPPORTS
TRAVERSE ET SUPPORTS
QUERTRAEGER UND ABSTUETZUNGEN
STAFFE E SUPPORTI TRASVERSALI
MASTILES,TRAVESANO Y SOPORTES
TVARPLATTA OCH FASTE

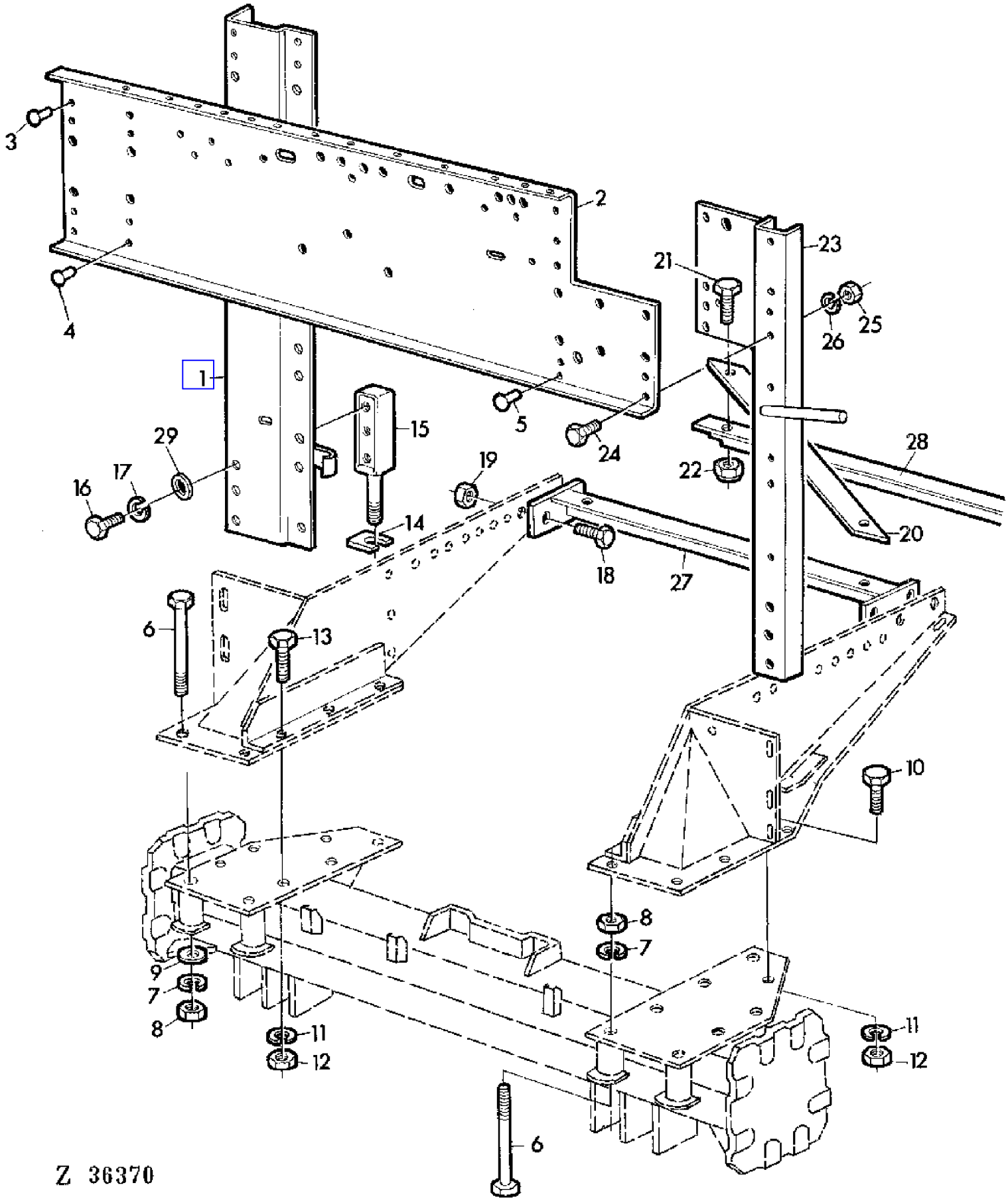

COPYRIGHT©1994 - 2008 DEERE & COMPANY Moline, Illinois All rights reserved

(2E18) TRAVERSE BRACKET AND SUPPORTS
TRAVERSE ET SUPPORTS
QUERTRAEGER UND ABSTUETZUNGEN
STAFFE E SUPPORTI TRASVERSALI
MASTILES,TRAVESANO Y SOPORTES
TVARPLATTA OCH FASTE

KEY	PART NO.	PART NAME	QTY	SERIAL NO.	975	975HY/4	REMARKS
1	AZ34666	CRADLE	1		X	X	(SUB FOR AZ24396, AZ26687, AZ31006)
2	Z37790	CROSSBAR	1		X	X	(SUB FOR Z34014)
3	16M2547	RIVET	AR		X	X	8 X 20 MM
4	16M2550	RIVET	AR		X	X	8 X 28 MM
5	16M2549	RIVET	AR		X	X	8 X 25 MM
6	19M7645	SCREW	AR		X	X	M20 X 200
7	12M7039	LOCK WASHER	AR		X	X	20 MM
8	14M7144	NUT	AR		X	X	M20
9	Z26239	WASHER	AR		X	X	
10	19M7488	CAP SCREW	AR		X	X	M16 X 40
11	12M7017	LOCK WASHER	AR		X	X	16 MM
12	14M7142	NUT	AR		X	X	M16
13	19M7480	CAP SCREW	AR		X	X	M16 X 55
14	Z25823	SHIM	10		X	X	
15	Z11076	HOLDER	2		X	X	(SUB FOR Z10916)
16	19M7171	CAP SCREW	3		X		M12 X 35
	19M7387	CAP SCREW	3		X	X	M12 X 40
17	12M7014	LOCK WASHER	3		X	X	12 MM
18	19M7169	CAP SCREW	4		X	X	M10 X 35
19	14M7167	LOCK NUT	4		X	X	M10
20	Z23030	BRACE	2		X	X	
21	19M7268	CAP SCREW	4		X	X	M12 X 25
22	14M7168	LOCK NUT	4		X	X	M12
23	Z34007	CHANNEL	1	- 004988	X		
	AZ26688	CHANNEL	1	004989 -	X	X	(SUB FOR AZ24511)
24	19M7139	CAP SCREW	AR		X	X	M8 X 20
25	14M7029	NUT	AR		X	X	8 MM
26	12M7008	LOCK WASHER	AR		X	X	8 MM
27	AZ26690	BRACE	1		X	X	(SUB FOR AZ22856)
28	Z23029	BRACE	1		X	X	
29	24M7038	WASHER	AR		X	X	14 MM

COPYRIGHT©1994 - 2008 DEERE & COMPANY Moline, Illinois All rights reserved

(1D02) TURBOCHARGER
TURBOCOMPRESSEUR
TURBOLADER
TURBOCOMPRESSORE
TURBOCARGADOR
TURBOLADDARE

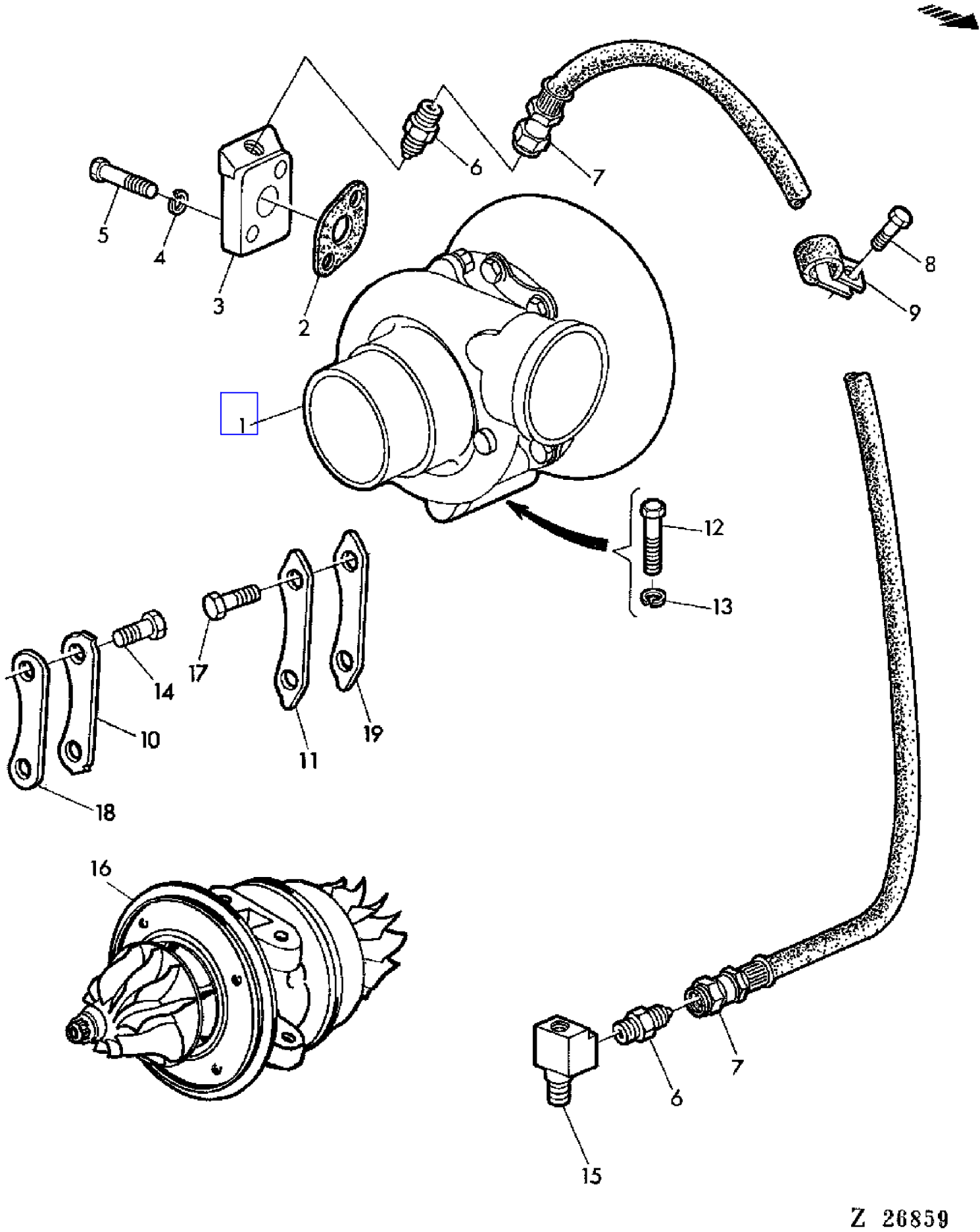

COPYRIGHT©1994 - 2008 DEERE & COMPANY Moline, Illinois All rights reserved

(1D02) TURBOCHARGER
TURBOCOMPRESSEUR
TURBOLADER
TURBOCOMPRESSORE
TURBOCARGADOR
TURBOLADDARE

KEY	PART NO.	PART NAME	QTY	SERIAL NO.	975	975HY/4	REMARKS
1	RE26291	TURBOCHARGER	1		X		(MODEL TA3401) (SUB FOR AR73796, AR87885) (MODEL T04B31)
	RE26291	TURBOCHARGER	1			X	(MODEL TA3401) (SUB FOR AR87885) (MODEL T04B31)
2	R43413	GASKET	1		X	X	
3	T30199	ADAPTER	1		X	X	
4	12H303	LOCK WASHER	2		X	X	5/16"
5	19H1901	CAP SCREW	2		X	X	5/16" X 2"
6	R27346	FITTING	2		X	X	
7	AR78832	HYDRAULIC HOSE	1		X	X	(SUB FOR AR47297)
8	19H1800	CAP SCREW	1		X	X	3/8" X 1-1/2"
9	R46414	CLAMP	1		X	X	
10	R48710	LOCK PLATE	3		X	X	(FOR AR87885)
11	R43815	LOCK PLATE	3		X	X	(FOR AR87885)
12	19H2552	CAP SCREW	4		X	X	3/8" X 1-1/8"
13	12H304	LOCK WASHER	4		X	X	3/8"
14	R43819	CAP SCREW	6		X	X	(FOR AR87885)
15	T19158	TEE FITTING	1		X	X	
16	AR68989	HOUSING	AR		X		KIT, AIRESEARCH (FOR AR73796) (SUB FOR AR68988) (ORD W/ KEYS 10,11)
	AR69308	HOUSING	AR			X	KIT, AIRESEARCH (FOR AR87885) (ORD W/KEYS 10,11)
17	19H2020	CAP SCREW	6		X	X	5/16" X 1/2" (FOR AR87885)
18	R48709	CLAMP	3		X	X	(FOR AR87885)
19	R43821	CLAMP	3		X	X	(FOR AR87885)

COPYRIGHT©1994 - 2008 DEERE & COMPANY Moline, Illinois All rights reserved

(1F12) TURN SIGNAL AND TAIL LIGHTS
FEUX CLIGNOTANTS ET ARRIERE
BLINK UND SCHLUSSLEUCHTEN
LUCI DIREZIONE E DI CODA
LUCES INTERMITENTES Y PILOTOS
BLINKERS OCH BAKLJUS

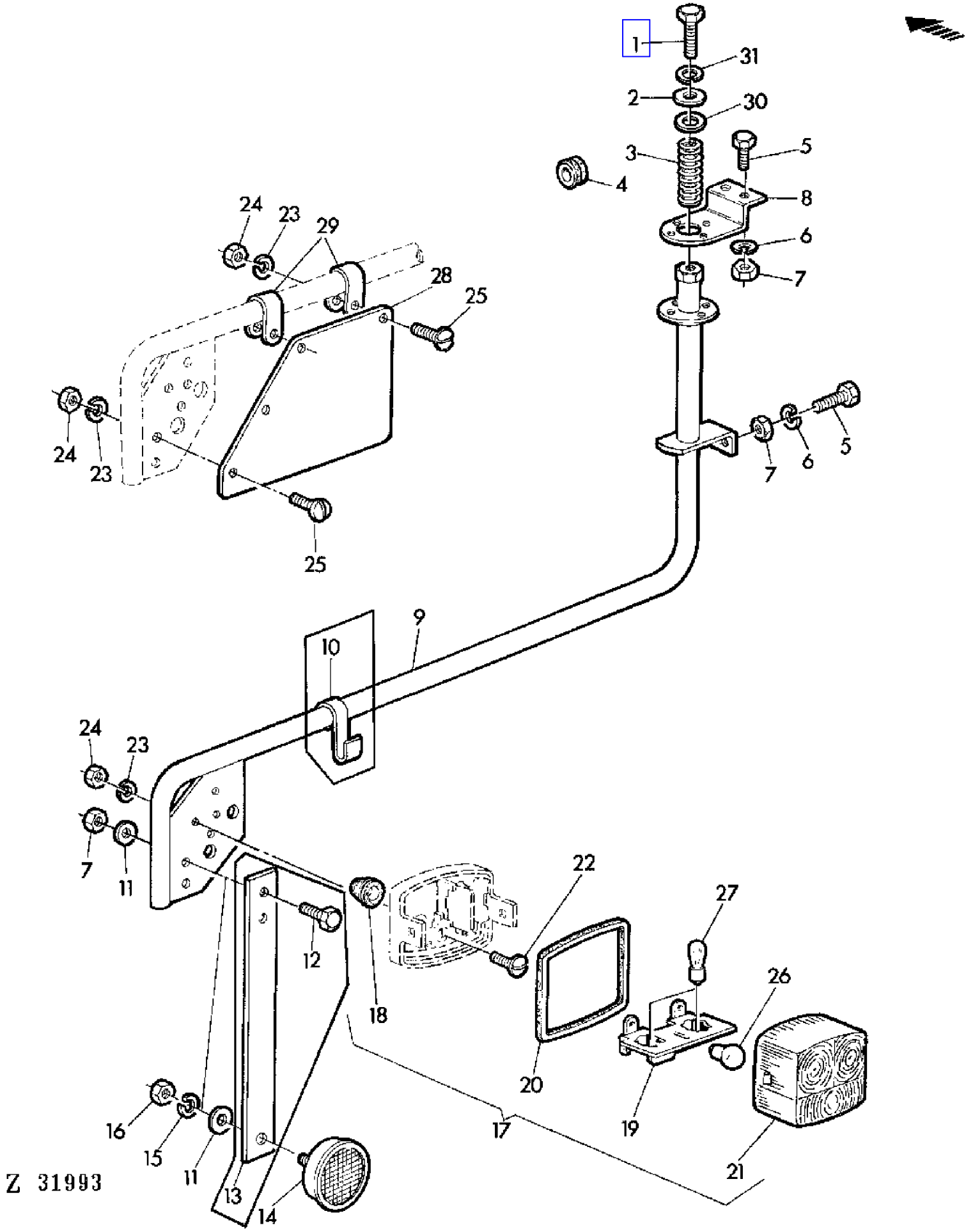

COPYRIGHT©1994 - 2008 DEERE & COMPANY Moline, Illinois All rights reserved

(1F12) TURN SIGNAL AND TAIL LIGHTS
FEUX CLIGNOTANTS ET ARRIERE
BLINK UND SCHLUSSLEUCHTEN
LUCI DIREZIONE E DI CODA
LUCES INTERMITENTES Y PILOTOS
BLINKERS OCH BAKLJUS

KEY	PART NO.	PART NAME	QTY	SERIAL NO.	975	975HY/4	REMARKS
1	19M7168	CAP SCREW	2		X	X	M10 X 30
2	24M7101	WASHER	2		X	X	11,5 MM
3	Z24302	COMPRESSION SPRING	2		X	X	
4	Z21238	GROMMET	AR		X	X	
5	19M7139	CAP SCREW	AR		X	X	M8 X 20
6	12M7008	LOCK WASHER	AR		X	X	8 MM
7	14M7029	NUT	AR		X	X	M8
8	Z22215	ARRESTOR	2		X	X	
9	AZ23836	BRACKET	1		X		10', LH, AR
	AZ23023	BRACKET	2		X	X	
10	Z34123	HOOK	2	- 013738	X		
11	24M7088	WASHER	AR		X	X	6,6 MM
12	19M7284	CAP SCREW	AR	- 013738	X		M8 X 18
13	Z34122	STRAP	2	- 013734	X		
14	L39871	REFLECTOR	2		X	X	INCL KEYS 15,16 (SUB FOR 99M6488)
15	12M7012	LOCK WASHER	AR		X	X	6 MM
16	14M7027	NUT	AR		X	X	M6
17	AL26799	LAMP	2		X		AR, RH, ASSY, INCL KEYS 18-21 (SUB FOR AZ23630)
	AT43600	LAMP	1		X	X	LH, ASSY, INCL KEYS 18-21 (SUB FOR AZ23565)
	AT43601	LAMP	1		X	X	RH, ASSY, INCL KEYS 18-21 (SUB FOR AZ23566)
18	L31774	GROMMET	2		X	X	(SUB FOR Z34569)
19	L31777	HOLDER	2		X	X	(SUB FOR AZ23631)
20	L31778	GASKET	2		X	X	(SUB FOR Z34572)
21	L31776	LENS	2		X		AR (SUB FOR Z34571)
	L31780	LENS	1		X	X	LH (SUB FOR Z34574)
	L31781	LENS	1		X	X	RH (SUB FOR Z34573)
22	21M7142	SCREW	4		X	X	M5 X 25
23	12M7011	LOCK WASHER	AR		X	X	5 MM
24	14M7028	NUT	AR		X		M5
25	21M7141	SCREW	AR		X		AR, M5 X 20
26	57M7013	BULB	2		X	X	12V 10W
27	57M7014	BULB	4		X	X	12V 21W
28	Z34124	PLATE	1		X		AR
29	Z21993	CLAMP	2		X		AR (SUB FOR Z22568)
30	Z40291	SPACER	2		X	X	
31	12M7013	LOCK WASHER	2		X	X	10 MM

COPYRIGHT©1994 - 2008 DEERE & COMPANY Moline, Illinois All rights reserved

(4F22) UNLOADING AUGER (LONG)
GOULOTTE DE VIDANGE (LONGUE)
ENTLEERROHR (LANG)
COCLEA DI SCARICO (LUNGA)
MANGA DE DESCARGA (LARGA)
TOMNINGSSKRUV (LANG)

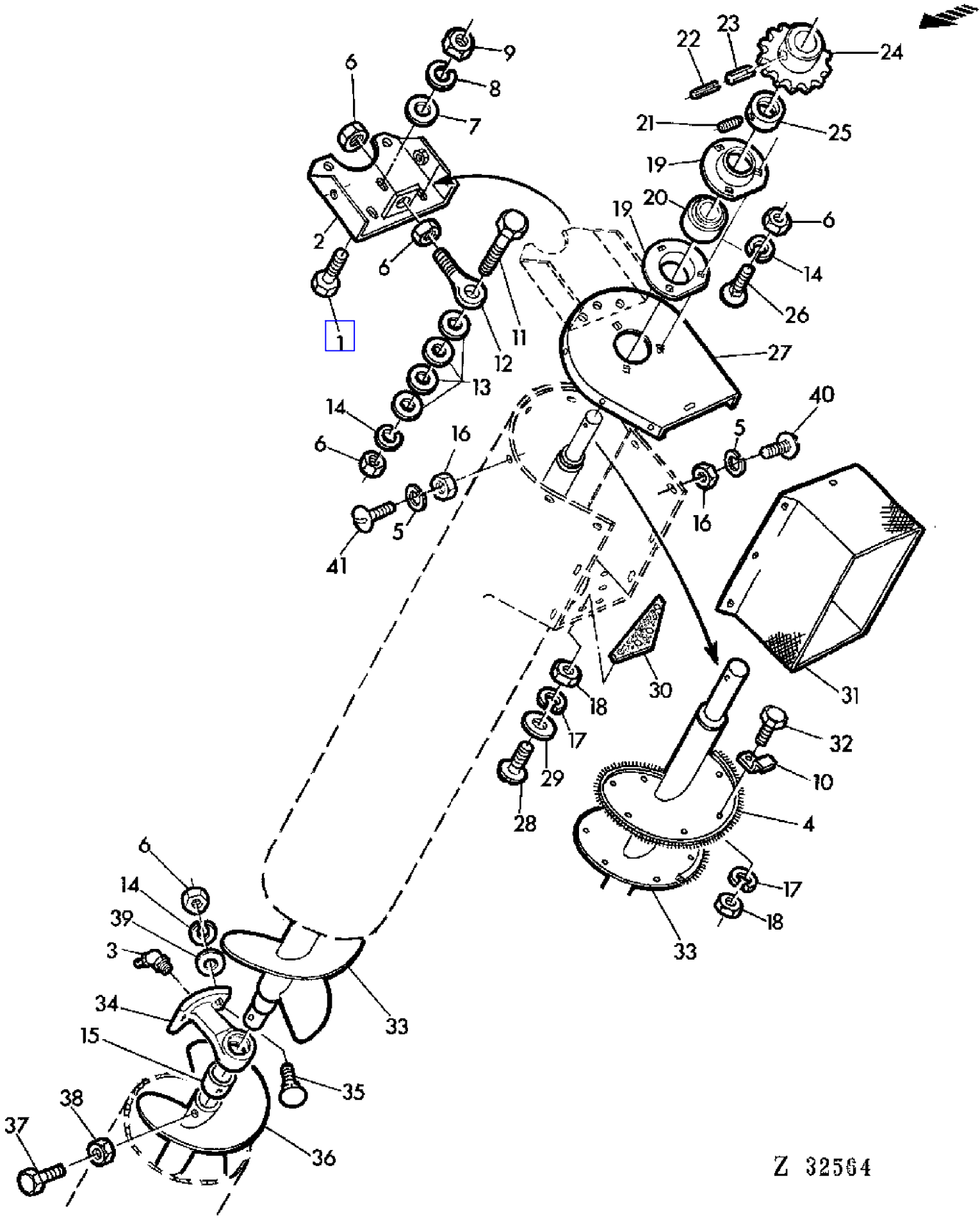

COPYRIGHT©1994 - 2008 DEERE & COMPANY Moline, Illinois All rights reserved

(4F22) UNLOADING AUGER (LONG)
GOULOTTE DE VIDANGE (LONGUE)
ENTLEERROHR (LANG)
COCLEA DI SCARICO (LUNGA)
MANGA DE DESCARGA (LARGA)
TOMNINGSSKRUV (LANG)

KEY	PART NO.	PART NAME	QTY	SERIAL NO.	975	975HY/4	REMARKS
1	19M7268	CAP SCREW	AR		X	X	M12 X 25
2	AZ25101	TIGHTENER	1		X	X	
3	58M5577	LUBRICATION FITTING	1		X	X	8 X 1 MM
4	AZ27913	BRUSH	1		X	X	
5	12M7008	LOCK WASHER	AR		X	X	8 MM
6	14M7140	NUT	AR		X	X	M10
7	24M7038	WASHER	AR		X	X	14 MM
8	12M7014	LOCK WASHER	AR		X	X	12 MM
9	14M7031	NUT	AR		X	X	M12
10	Z38597	CLAMP	12		X	X	
11	19M7180	CAP SCREW	AR		X	X	M10 X 45
12	Z36681	EYEBOLT	1		X	X	
13	24M7056	WASHER	AR		X	X	10,5 MM
14	12M7013	LOCK WASHER	AR		X	X	10 MM
15	Z37227	BUSHING	1		X	X	
16	14M7029	NUT	AR		X	X	M8
17	12M7012	LOCK WASHER	AR		X	X	6 MM
18	14M7027	NUT	AR		X	X	M6
19	P45502	PRESSED FLANGED HOUSING	2		X	X	
20	JD39103	BALL BEARING	1		X	X	
21	AZ19844	SET SCREW	1		X	X	KIT
22	34M7043	SPRING PIN	AR		X	X	6 X 45 MM
23	34M7070	SPRING PIN	AR		X	X	10 X 45 MM
24	Z11151	CHAIN SPROCKET	1		X	X	Z = 16
	Z11434	CHAIN SPROCKET	1		X	X	(A) Z = 13
25	AZ10045	ECCENTRIC LOCKING COLLAR	1		X	X	INCL KEY 21
26	03M7088	BOLT	AR		X	X	M10 X 20
27	Z38547	COVER	1		X	X	
28	21M7127	SCREW	AR		X	X	M6 X 18
29	24M7100	WASHER	AR		X	X	7 MM
30	Z34986	GASKET	1		X	X	
31	Z44800	LIMIT CURTAIN	1		X	X	(SUB FOR Z38824)
32	19M6614	CAP SCREW	12		X	X	M6 X 12
33	AZ26919	AUGER	1		X	X	(ORD AZ38255, Z11817, (3) 24M3533, (6) 24M7302, 40M1831)
34	AZ26181	BEARING	1		X	X	INCL KEY 15
35	03M7085	BOLT	AR		X	X	M10 X 30
36	AZ36247	AUGER	1		X	X	(ORD AZ38255, Z11817, (3) 24M3533, (6) 24M7302, 40M1831) (SUB FOR AZ26179)

(A) ONLY WITH UNLOADING PADDLE
UNIQUEMENT AVEC ROULEAU A PALETTES
NUR BEI PADDELWALZE
SOLO CON TAMBURO A PALETTE
SOLO CON TAMBOR DE PALETAS
ENDAST VID SKOVELAXEL

COPYRIGHT©1994 - 2008 DEERE & COMPANY Moline, Illinois All rights reserved

(4F22) UNLOADING AUGER (LONG)
GOULOTTE DE VIDANGE (LONGUE)
ENTLEERROHR (LANG)
COCLEA DI SCARICO (LUNGA)
MANGA DE DESCARGA (LARGA)
TOMNINGSSKRUV (LANG)

KEY	PART NO.	PART NAME	QTY	SERIAL NO.	975	975HY	REMARKS
37	19M7189	CAP SCREW	1		X	X	M12 X 80
38	14M7168	LOCK NUT	1		X	X	M12
39	24M7040	WASHER	AR		X	X	11 MM
40	21M7160	SCREW	AR		X	X	M8 X 18
41	21M7081	SCREW	AR		X	X	M8 X 15

(A) ONLY WITH UNLOADING PADDLE
UNIQUEMENT AVEC ROULEAU A PALETTES
NUR BEI PADDELWALZE
SOLO CON TAMBURO A PALETTE
SOLO CON TAMBOR DE PALETAS
ENDAST VID SKOVELAXEL

COPYRIGHT©1994 - 2008 DEERE & COMPANY Moline, Illinois All rights reserved

(4F24) UNLOADING AUGER (LONG)
GOULOTTE DE VIDANGE (LONGUE)
ENTLEERROHR (LANG)
COCLEA DI SCARICO (LUNGA)
MANGA DE DESCARGA (LARGA)
TOMNINGSSKRUV (LANG)

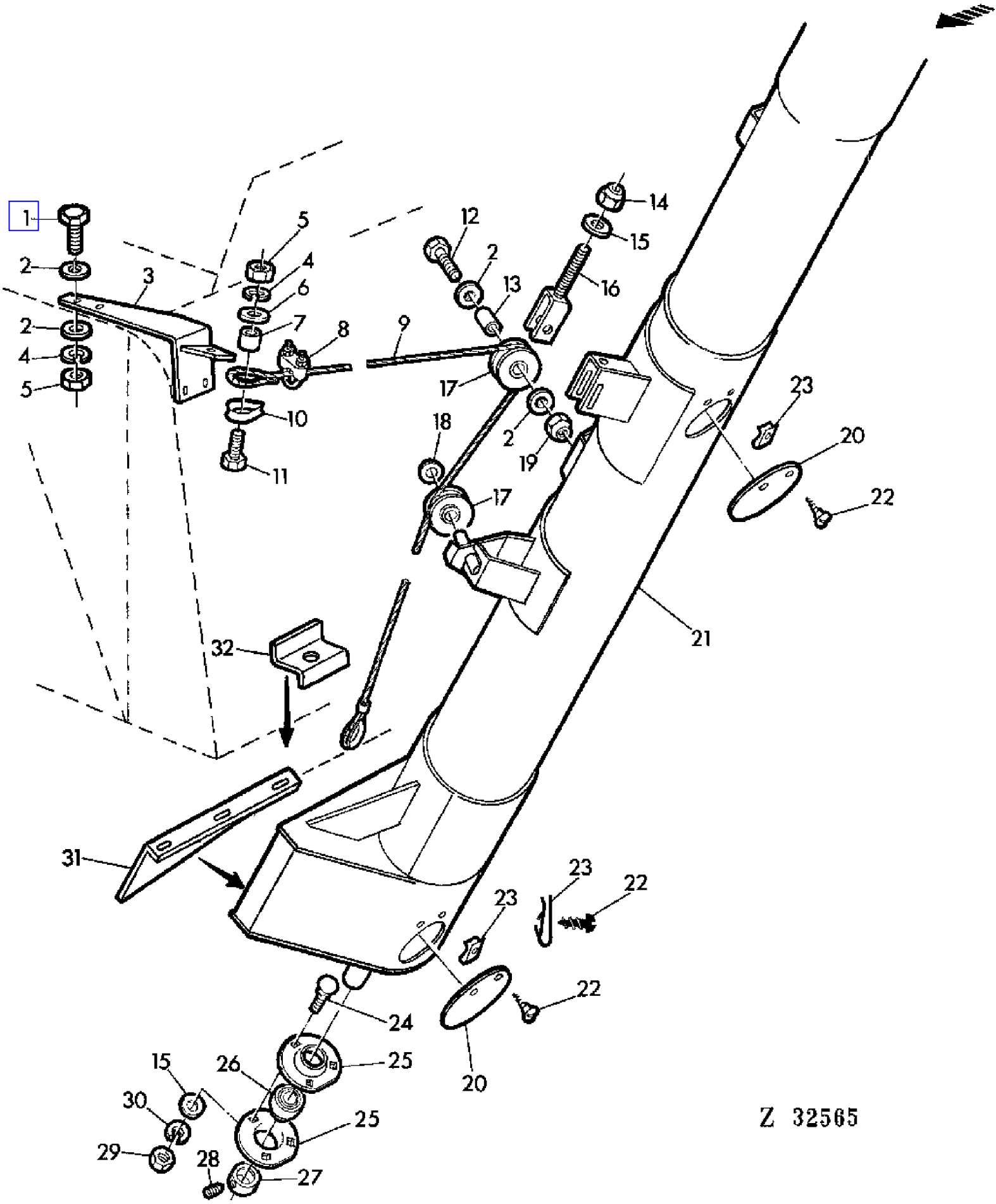

COPYRIGHT©1994 - 2008 DEERE & COMPANY Moline, Illinois All rights reserved

(4F24) UNLOADING AUGER (LONG)
GOULOTTE DE VIDANGE (LONGUE)
ENTLEERROHR (LANG)
COCLEA DI SCARICO (LUNGA)
MANGA DE DESCARGA (LARGA)
TOMNINGSSKRUV (LANG)

KEY	PART NO.	PART NAME	QTY	SERIAL NO.	975	975HY/4	REMARKS
1	19M7139	CAP SCREW	AR		X	X	M8 X 20
2	24M7036	WASHER	AR		X	X	9 MM
3	AZ26583	RETAINER	1		X	X	
4	12M7008	LOCK WASHER	AR		X	X	8 MM
5	14M7029	NUT	AR		X	X	M8
6	24M7024	WASHER	AR		X	X	9,5 MM
7	Z32264	SPACER	1		X	X	
8	AZ21088	CLAMP	1		X	X	
9	AZ30099	CABLE	1		X	X	INCL KEYS 8,10 (SUB FOR AZ26425)
10	Z32298	THIMBLE	1		X	X	
11	19M7513	CAP SCREW	1		X	X	M8 X 30
12	19M7269	CAP SCREW	1		X	X	M8 X 50
13	Z37452	SPACER	1		X	X	
14	14M7167	LOCK NUT	1		X	X	M10
15	24M7040	WASHER	AR		X	X	11,5 MM
16	AZ26365	YOKE	1		X	X	
17	Z11243	ROLLER	2		X	X	
18	AZ24045	COVER	1		X	X	
19	14M7166	LOCK NUT	1		X	X	M8
20	Z39893	COVER	2		X	X	
21	AZ29450	SPOUT	1		X	X	
22	37M7029	SCREW	AR		X	X	M5,5 X 13
23	Z20443	NUT	AR		X	X	
24	03M7088	BOLT	AR		X	X	M10 X 20
25	Z38395	PRESSED FLANGED HOUSING	AR		X	X	
26	JD39103	BALL BEARING	1		X	X	
27	AZ10045	ECCENTRIC LOCKING COLLAR	1		X	X	INCL KEY 28
28	AZ19844	SET SCREW	1		X	X	KIT
29	14M7140	NUT	AR		X	X	M10
30	12M7013	LOCK WASHER	AR		X	X	10 MM
31	Z33542	SHEET	1		X	X	
32	Z35901	HOLDER	1		X	X	

COPYRIGHT©1994 - 2008 DEERE & COMPANY Moline, Illinois All rights reserved

(2G04) UNLOADING TUBE (LONG) COVERS
GOULOTTE DE VIDANGE (LONGUE) HABILLAGE
ENTLEERROHR (LANG) VERKLEIDUNG
RIVESTIMENTO PER TUBO DI SCARICO LUNGO
REVESTIMIENTO PARA MANGA DE DESCARGA (LARGA)
BEKLADNAD FOR LANG TOMNINGSROR

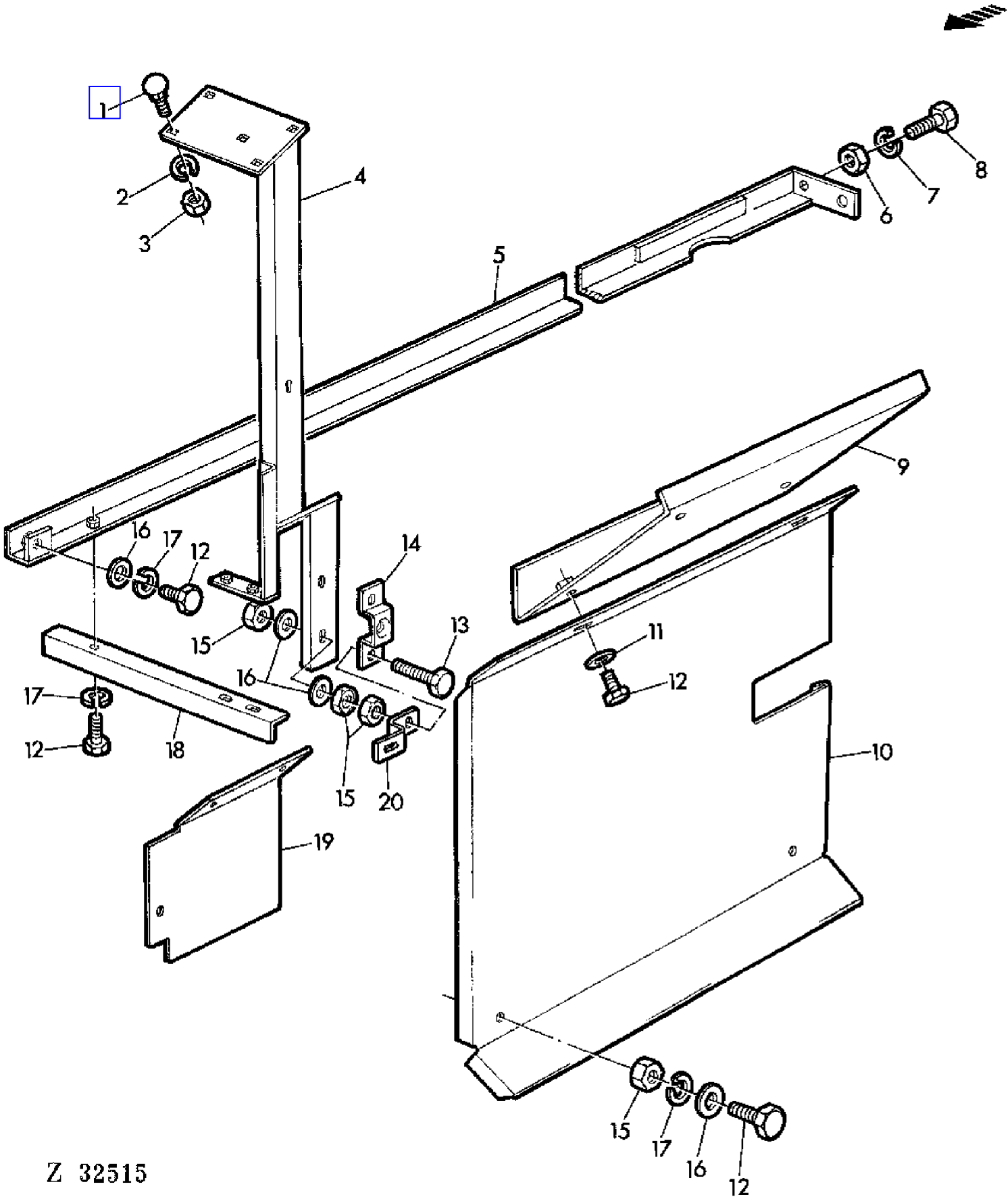

COPYRIGHT©1994 - 2008 DEERE & COMPANY Moline, Illinois All rights reserved

(2G04) UNLOADING TUBE (LONG) COVERS
GOULOTTE DE VIDANGE (LONGUE) HABILLAGE
ENTLEERROHR (LANG) VERKLEIDUNG
RIVESTIMENTO PER TUBO DI SCARICO LUNGO
REVESTIMIENTO PARA MANGA DE DESCARGA (LARGA)
BEKLADNAD FOR LANG TOMNINGSROR

KEY	PART NO.	PART NAME	QTY	SERIAL NO.	975	975HY/4	REMARKS
1	03M7084	BOLT	AR		X	X	M10 X 25
2	12M7013	LOCK WASHER	AR		X	X	10 MM
3	14M7140	NUT	AR		X	X	M10
4	AZ29399	BRACKET	1		X	X	
5	AZ26541	ANGLE	1		X	X	
6	14M7027	NUT	AR		X	X	M6
7	12M7012	LOCK WASHER	AR		X	X	6 MM
8	19M7375	CAP SCREW	AR		X	X	M6 X 18
9	AZ26360	GUARD	1		X	X	
10	Z39901	GUARD	1		X	X	
11	L12540	WASHER	AR		X	X	
12	19M7139	CAP SCREW	AR		X	X	M8 X 20
13	19M7338	CAP SCREW	AR		X	X	M8 X 45
14	AZ26214	HOLDER	1		X	X	
15	14M7029	NUT	AR		X	X	M8
16	24M7036	WASHER	AR		X	X	9 MM
17	12M7008	LOCK WASHER	AR		X	X	8 MM
18	Z39892	ANGLE	1		X	X	
19	AZ26490	GUARD	1		X	X	
20	Z37442	HOLDER	1		X	X	

COPYRIGHT©1994 - 2008 DEERE & COMPANY Moline, Illinois All rights reserved

(4D14) UPPER FAN VARIATOR
VARIATEUR SUPERIEUR DU VENTILATEUR
OBERER GEBLAESE-VARIATOR
VARIATORE SUPERIORE DEL VENTILATORE
VARIADOR SUPERIOR DEL VENTILADOR
FLAKTENS OVRE VARIATOR

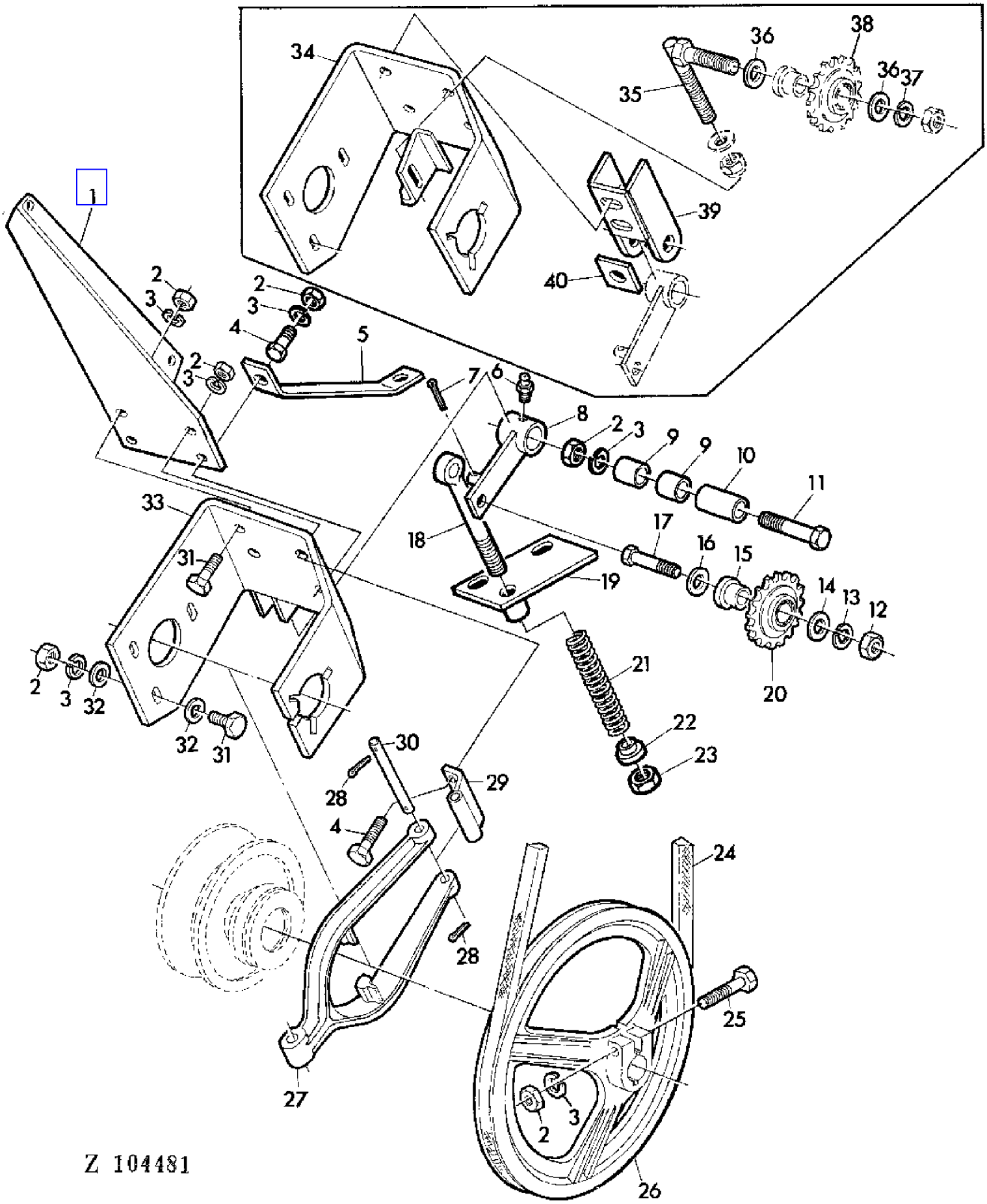

COPYRIGHT©1994 - 2008 DEERE & COMPANY Moline, Illinois All rights reserved

(4D14) UPPER FAN VARIATOR
VARIATEUR SUPERIEUR DU VENTILATEUR
OBERER GEBLAESE-VARIATOR
VARIATORE SUPERIORE DEL VENTILATORE
VARIADOR SUPERIOR DEL VENTILADOR
FLAKTENS OVRE VARIATOR

KEY	PART NO.	PART NAME	QTY	SERIAL NO.			975	975HY/4	REMARKS
1	Z34652	SUPPORT	1				X	X	
2	14M7140	NUT	AR				X	X	M10
3	12M7013	LOCK WASHER	AR				X	X	10 MM
4	19M7169	CAP SCREW	2				X	X	M10 X 35
5	Z37729	BRACE	1				X	X	
6	58M7004	LUBRICATION FITTING	1	026723	-		X	X	6 X 1 MM
7	11M7012	COTTER PIN	1	026723	-		X	X	3,2 X 16 MM
8	AZ30547	LEVER	1	026723	-		X	X	
9	Z40932	BUSHING	2	026723	-		X	X	
10	Z40933	BUSHING	1	026723	-		X	X	
11	19M7327	CAP SCREW	1	026723	-		X	X	M10 X 65
12	14M7154	NUT	AR				X	X	M12
13	12M7055	WASHER	1	026723	-		X	X	12 MM
14	24M7047	WASHER	AR				X	X	13 MM
15	Z20579	BUSHING	1				X	X	(SUB FOR Z29438)
16	L19362	WASHER	AR	026723	-		X	X	
17	19M7158	CAP SCREW	1	026723	-		X	X	M12 X 45
18	Z40935	EYEBOLT	1	026723	-		X	X	
19	AZ34167	STRAP	1	026723	-		X	X	(SUB FOR Z40931)
20	AZ27084	CHAIN SPROCKET	1	017018	-		X	X	
21	Z40936	COMPRESSION SPRING	1	026723	-		X	X	
22	Z40934	WASHER	1	026723	-		X	X	
23	14M7167	LOCK NUT	AR				X	X	M10
24	Z34405	BELT	1				X	X	
25	19M7156	CAP SCREW	AR				X	X	M10 X 60
26	Z11084	PULLEY	1				X	X	(SUB FOR Z10812, Z10950)
27	Z10857	FORK	1		-	008277	X		
	Z11068	FORK	1	008278	-		X	X	
28	11M7013	COTTER PIN	AR				X	X	M3,2 X 20
29	AZ23427	RETAINER	1				X	X	
30	Z20575	PIN	1				X	X	
31	19M7168	CAP SCREW	AR				X	X	M10 X 30
32	24M7040	WASHER	AR				X	X	11 MM
33	AZ30589	SUPPORT	1	026723	-		X	X	
34	AZ23428	SUPPORT	1		-	017017	X		(ORD AZ18115, AZ27085, Z20579)
	AZ27085	QUILL	1	017018	-	026722	X	X	
35	AZ23866	TIGHTENER	1		-	017017	X		
	AZ18115	TIGHTENER	1	017018	-	026722	X	X	
36	24M7038	WASHER	AR		-	026722	X	X	14 MM
37	12M7014	LOCK WASHER	AR		-	026722	X	X	12 MM
38	AZ10272	CHAIN SPROCKET	1		-	017017	X		
39	AZ30545	SUPPORT	1		-	XXXX	X	X	AR

COPYRIGHT©1994 - 2008 DEERE & COMPANY Moline, Illinois All rights reserved

(4D14) UPPER FAN VARIATOR
VARIATEUR SUPERIEUR DU VENTILATEUR
OBERER GEBLAESE-VARIATOR
VARIATORE SUPERIORE DEL VENTILATORE
VARIADOR SUPERIOR DEL VENTILADOR
FLAKTENS OVRE VARIATOR

KEY	PART NO.	PART NAME	QTY	SERIAL NO.	975	975HY/4	REMARKS
40	Z40930	PLATE	1	- XXXX	X	X	AR

COPYRIGHT©1994 - 2008 DEERE & COMPANY Moline, Illinois All rights reserved

(4D16) UPPER FAN VARIATOR
VARIATEUR SUPERIEUR DU VENTILATEUR
OBERER GEBLAESE-VARIATOR
VARIATORE SUPERIORE DEL VENTILATORE
VARIADOR SUPERIOR DEL VENTILADOR
FLAKTENS OVRE VARIATOR

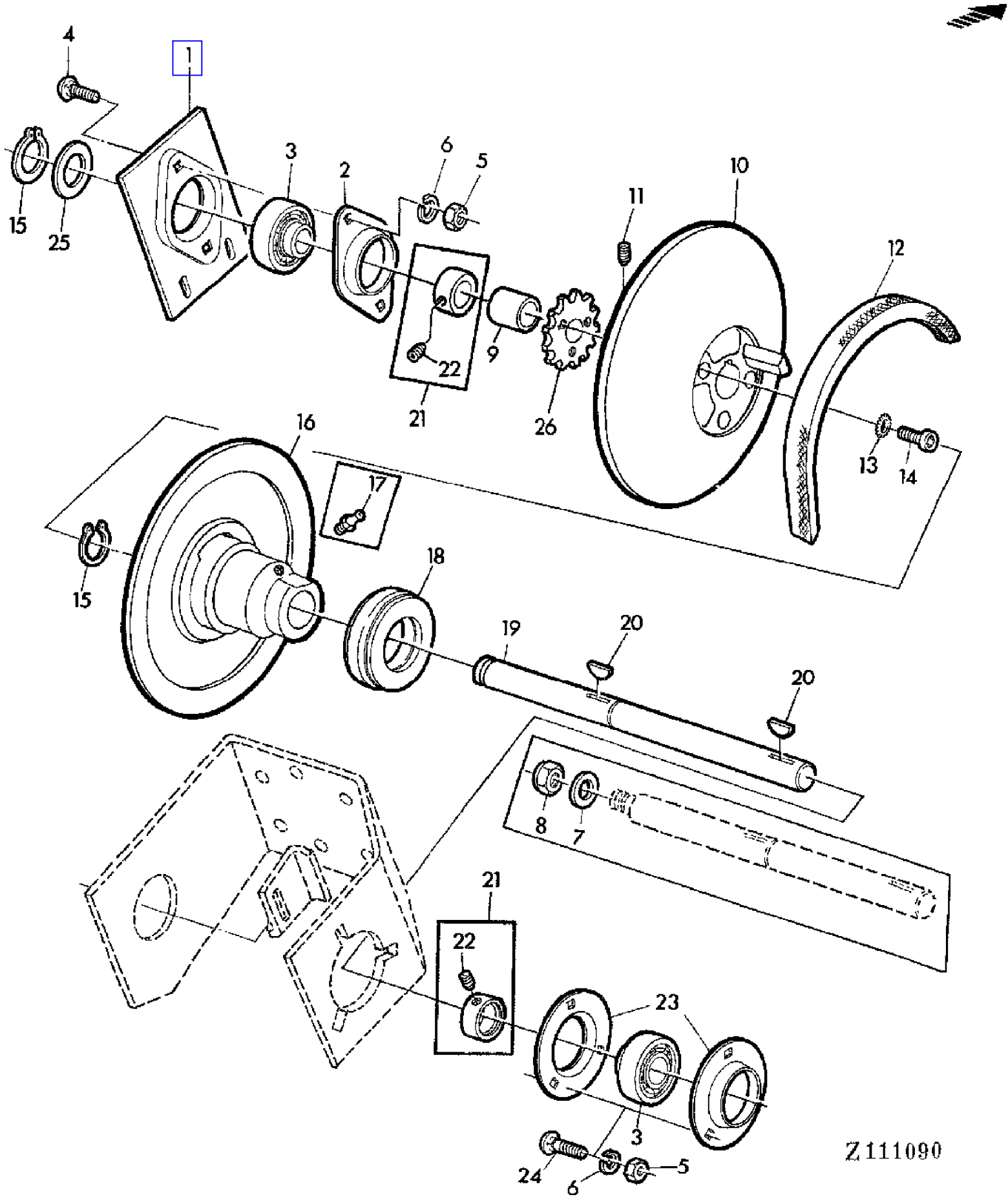

COPYRIGHT©1994 - 2008 DEERE & COMPANY Moline, Illinois All rights reserved

(4D16) UPPER FAN VARIATOR
VARIATEUR SUPERIEUR DU VENTILATEUR
OBERER GEBLAESE-VARIATOR
VARIATORE SUPERIORE DEL VENTILATORE
VARIADOR SUPERIOR DEL VENTILADOR
FLAKTENS OVRE VARIATOR

KEY	PART NO.	PART NAME	QTY	SERIAL NO.		975	975HY	REMARKS
1	Z30025	PLATE	1			X	X	
2	Z30026	QUILL	1			X	X	
3	JD39103	BALL BEARING	2			X	X	
4	03M7088	BOLT	2			X	X	M10 X 20
5	14M7140	NUT	5			X	X	M10
6	12M7013	LOCK WASHER	5			X	X	10 MM
7	L18889	WASHER	1		- 017017	X		
8	14M7170	LOCK NUT	1		- 017017	X		M16
9	Z33739	SPACER	1		- 017017	X		
	Z38117	SPACER	1	017018	-	X	X	
10	Z10676	HALF SHEAVE	1			X	X	
11	22M7000	SET SCREW	1			X	X	M8 X 15
12	Z41178	BELT	1			X	X	(SUB FOR Z20459)
13	12M7072	LOCK WASHER	3			X	X	8MM (SUB FOR 12M7008)
14	19M7555	SCREW	3			X	X	M8 X 30
15	40M1831	SNAP RING	2			X	X	30 X 1,5 MM
16	Z10085	HALF SHEAVE	1		- 020516	X	X	(ORD JD39117, Z11214)
	Z11214	HALF SHEAVE	1	020517	-	X	X	
17	58M7004	LUBRICATION FITTING	1		- 020516	X	X	6 X 1 MM
18	AM3983T	THRUST BEARING	1		- 020516	X	X	
	JD39117	THROW-OUT BEARING	1	020517	-	X	X	
19	Z34653	SHAFT	1		- 017017	X		(ORD AZ10045, Z38117, Z40190)
	Z40190	SHAFT	1	017018	-	X	X	(SUB FOR Z38087)
20	26M6731	SHAFT KEY	2			X	X	6 X 10 MM
21	AZ10045	ECCENTRIC LOCKING COLLAR	2			X	X	
22	AZ19844	SET SCREW	2			X	X	KIT
23	Z38395	PRESSED FLANGED HOUSING	2			X	X	
24	03M7017	BOLT	3			X	X	M10 X 25
25	L19358	WASHER	2			X	X	
26	Z30028	CHAIN SPROCKET	1		- 017017	X		Z = 16
	Z38056	CHAIN SPROCKET	1	017018	-	X	X	Z = 14

COPYRIGHT©1994 - 2008 DEERE & COMPANY Moline, Illinois All rights reserved

(4E10) UPPER PART OF CLEAN GRAIN ELEVATOR
ELEVATEUR DE GRAIN,PARTIE SUPERIEURE
KOERNERELEVATOR OBERTEIL
PARTE SUPERIORE DELL'ELEVATORE GRANO
PARTE SUPERIOR DEL ELEVADOR DE GRANO LIMPIO
KARNELEVATORNS OVRE DEL

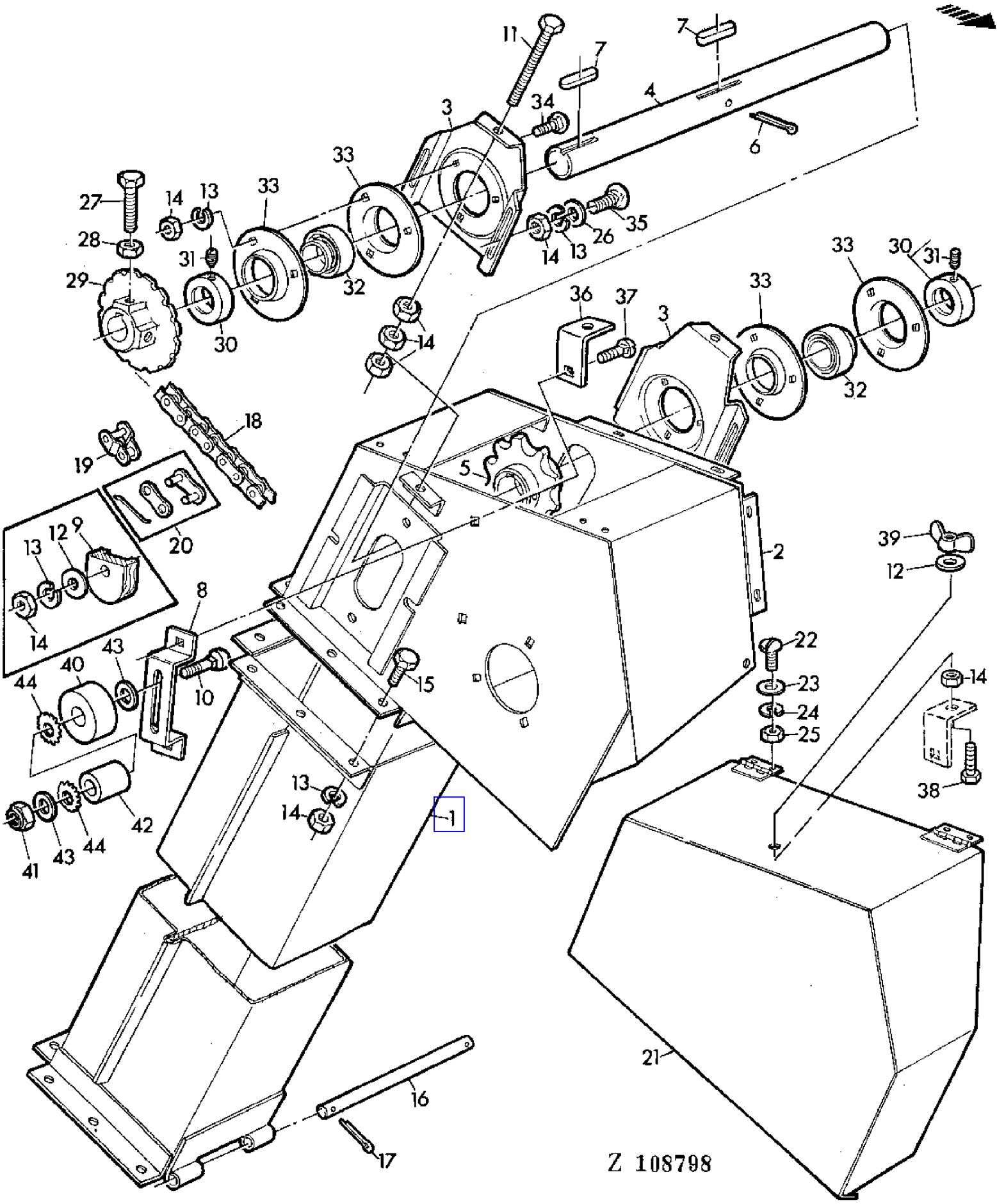

COPYRIGHT©1994 - 2008 DEERE & COMPANY Moline, Illinois All rights reserved

(4E10) UPPER PART OF CLEAN GRAIN ELEVATOR
ELEVATEUR DE GRAIN,PARTIE SUPERIEURE
KOERNERELEVATOR OBERTEIL
PARTE SUPERIORE DELL'ELEVATORE GRANO
PARTE SUPERIOR DEL ELEVADOR DE GRANO LIMPIO
KARNELEVATORNS OVRE DEL

KEY	PART NO.	PART NAME	QTY	SERIAL NO.	975	975HY/4	REMARKS
1	AZ22531	ELEVATOR	1		X	X	
2	AZ23247	CASE	1		X	X	
3	Z33470	HOLDER	2		X	X	
4	Z33445	SHAFT	1		X	X	
5	Z10997	CHAIN SPROCKET	1		X	X	
6	11M7025	COTTER PIN	AR		X	X	4 X 65 MM
7	49M4108	SHAFT KEY	2		X	X	8 X 7 X 32 MM
8	Z44217	HOLDER	1		X	X	(SUB FOR Z33471)
9	Z27775	TIGHTENER	1		X	X	(SUB FOR Z20418)
10	03M7095	BOLT	AR	- XXXX	X	X	M8 X 60
	03M7167	BOLT	1	XXXX -	X	X	M10 X 65
11	19M8403	CAP SCREW	AR		X	X	M8 X 75
12	24M7036	WASHER	AR		X	X	9 MM
13	12M7008	LOCK WASHER	AR		X	X	8 MM
14	14M7029	NUT	AR		X	X	M8
15	19M7162	CAP SCREW	AR		X	X	M8 X 15
16	Z34349	PIN	1		X	X	
17	11M7012	COTTER PIN	AR		X	X	3 X 18 MM
18	AZ32087	ROLLER CHAIN	1		X	X	L = 34 (SUB FOR AZ10363, AZ32090)
19	AL15953	LINK	AR		X	X	
20	AL15954	LINK	AR		X	X	
21	AZ23237	GUARD	1		X	X	
22	21M7085	SCREW	AR		X	X	M6 X 20
23	Z26250	WASHER	2		X	X	
24	12M7012	LOCK WASHER	AR		X	X	6 MM
25	Z20285	WING NUT	AR		X	X	
26	24M7036	WASHER	AR		X	X	9 MM
27	Z26249	SET SCREW	AR		X	X	
28	14M7152	NUT	AR		X	X	M10
29	Z10117	CHAIN SPROCKET	1		X	X	
30	AZ10044	ECCENTRIC LOCKING COLLAR	2		X	X	ASSY, INCL KEY 31
31	AZ19843	SET SCREW	2		X	X	KIT
32	JD39102	BALL BEARING	2		X	X	
33	P47232	PRESSED FLANGED HOUSING	4		X	X	
34	03M7090	BOLT	AR		X	X	M8 X 16
35	03M7054	BOLT	AR		X	X	M8 X 20
36	Z36391	ANGLE	1		X	X	
37	03M7135	BOLT	AR		X	X	M8 X 25
38	19M7163	CAP SCREW	AR		X	X	M8 X 25
39	14M7027	NUT	4		X	X	M6
40	Z41483	TIGHTENER	1	- XXXX	X	X	(ORD AZ34262) (SUB FOR Z27775)
	Z44030	TIGHTENER	1	XXXX -	X	X	

COPYRIGHT©1994 - 2008 DEERE & COMPANY Moline, Illinois All rights reserved

(4E10) UPPER PART OF CLEAN GRAIN ELEVATOR
ELEVATEUR DE GRAIN,PARTIE SUPERIEURE
KOERNERELEVATOR OBERTEIL
PARTE SUPERIORE DELL'ELEVATORE GRANO
PARTE SUPERIOR DEL ELEVADOR DE GRANO LIMPIO
KARNELEVATORNS OVRE DEL

KEY	PART NO.	PART NAME	QTY	SERIAL NO.		975	975HY/4	REMARKS
41	14M7166	LOCK NUT	1		- XXXX	X	X	M8
	14M7167	LOCK NUT	1	XXXX	-	X	X	M10
42	Z44032	BUSHING	1	XXXX	-	X	X	
43	24M7178	WASHER	2	XXXX	-	X	X	10,5 MM
44	12M7110	LOCK WASHER	AR			X	X	21 MM
..	AZ34262	TIGHTENER	1		- XXXX	X	X	KIT

COPYRIGHT©1994 - 2008 DEERE & COMPANY Moline, Illinois All rights reserved

(4E16) UPPER PART OF TAILINGS ELEVATOR
ELEVATEUR D'OTONS,PARTIE SUPERIEURE
UEBERKEHRELEVATOR OBERTEIL
PARTE SUPERIORE DELL'ELEVATORE DI RICUPERO
PARTE SUPERIOR DEL ELEVADOR DE RETRILLA
RETURGODSELEVATOR OVRE DEL

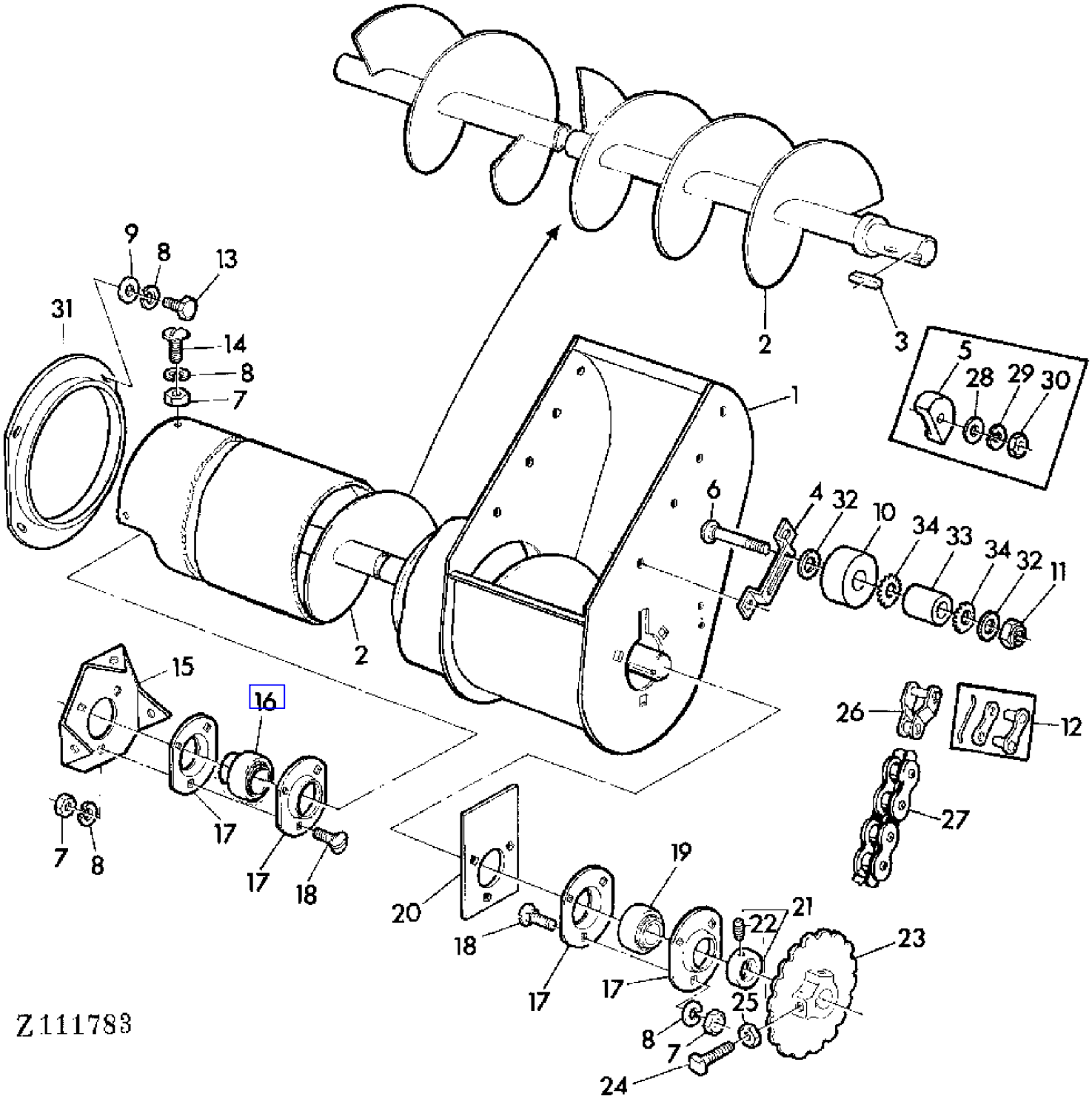

COPYRIGHT©1994 - 2008 DEERE & COMPANY Moline, Illinois All rights reserved

(4E16) UPPER PART OF TAILINGS ELEVATOR
ELEVATEUR D'OTONS,PARTIE SUPERIEURE
UEBERKEHRELEVATOR OBERTEIL
PARTE SUPERIORE DELL'ELEVATORE DI RICUPERO
PARTE SUPERIOR DEL ELEVADOR DE RETRILLA
RETURGODSELEVATOR OVRE DEL

KEY	PART NO.	PART NAME	QTY	SERIAL NO.		975	975HY/4	REMARKS
1	AZ22515	HOUSING	1		- 008651	X		
	AZ35562	HOUSING	1	008652	-	X	X	(SUB FOR AZ24919, AZ27704, AZ29688, AZ31453)
2	AZ22523	AUGER	1			X	X	
	AZ33369	AUGER	1			X	X	(A)
3	49M4108	SHAFT KEY	1			X	X	8 X 7 X 32 MM
4	Z33429	HOLDER	1			X	X	
5	Z27775	TIGHTENER	1			X	X	(SUB FOR Z20418)
6	03M7246	BOLT	1			X	X	M10 X 60
7	14M7029	NUT	AR			X	X	M8
8	12M7008	LOCK WASHER	AR			X	X	8 MM
9	24M7036	WASHER	AR			X	X	9 MM
10	Z41483	TIGHTENER	1		- XXXX	X	X	(ORD AZ34262) (SUB FOR Z27775)
	Z44030	TIGHTENER	1	XXXX	-	X	X	
11	14M7167	LOCK NUT	1			X	X	M10
12	AL15954	LINK	1			X	X	
13	19M7162	CAP SCREW	AR			X	X	M8 X 15
14	21M7081	SCREW	AR			X	X	M8 X 15
15	Z27575	HOLDER	1			X	X	
16	AZ17305	BEARING	1			X	X	
17	P47232	PRESSED FLANGED HOUSING	4			X	X	
18	03M7090	BOLT	AR			X	X	M8 X 15
19	JD39102	BALL BEARING	1			X	X	
20	Z20198	HOLDER	1			X	X	
21	AZ10044	ECCENTRIC LOCKING COLLAR	1			X	X	ASSY, INCL KEY 22
22	AZ19843	SET SCREW	1			X	X	KIT
23	Z10117	CHAIN SPROCKET	1			X	X	
24	Z26249	SET SCREW	2			X	X	
25	14M7152	NUT	2			X	X	M10
26	AL15953	LINK	1			X	X	
27	AZ32089	ROLLER CHAIN	1			X	X	L = 39, INCL KEYS 26,32 (SUB FOR AZ22522)
28	24M7040	WASHER	1			X	X	11,5 MM
29	12M7013	LOCK WASHER	1			X	X	10 MM
30	14M7140	NUT	1			X	X	M10
31	AZ23244	RING	1			X	X	
32	24M7178	WASHER	2	XXXX	-	X	X	10,5 MM
33	Z44032	BUSHING	1	XXXX	-	X	X	
34	12M7110	LOCK WASHER	AR			X	X	21 MM
..	AZ34262	TIGHTENER	1		- XXXX	X	X	KIT

(A) FOR RICE ATTACHMENT
POUR EQUIPEMENT RIZ
FUER REISAUSRUESTUNG
PER ATTREZZATURA DA RISO
PARA EQUIPO DE ARROZ
FOR RISTILLBEHOR

COPYRIGHT©1994 - 2008 DEERE & COMPANY Moline, Illinois All rights reserved

(4E16) UPPER PART OF TAILINGS ELEVATOR
ELEVATEUR D'OTONS,PARTIE SUPERIEURE
UEBERKEHRELEVATOR OBERTEIL
PARTE SUPERIORE DELL'ELEVATORE DI RICUPERO
PARTE SUPERIOR DEL ELEVADOR DE RETRILLA
RETURGODSELEVATOR OVRE DEL

KEY	PART NO.	PART NAME	QTY	SERIAL NO.	975	975HY/4	REMARKS

(A) FOR RICE ATTACHMENT
POUR EQUIPEMENT RIZ
FUER REISAUSRUESTUNG
PER ATTREZZATURA DA RISO
PARA EQUIPO DE ARROZ
FOR RISTILLBEHOR

COPYRIGHT©1994 - 2008 DEERE & COMPANY Moline, Illinois All rights reserved

(4A24) VARIABLE CYLINDER SHEAVES
VARIATEUR DU BATTEUR
DRESCHTROMMEL-VARIATOR
VARIATORE DEL BATTITORE
VARIADOR DEL CILINDRO DESGRANADOR
CYLINDERVARIATORSKIVOR

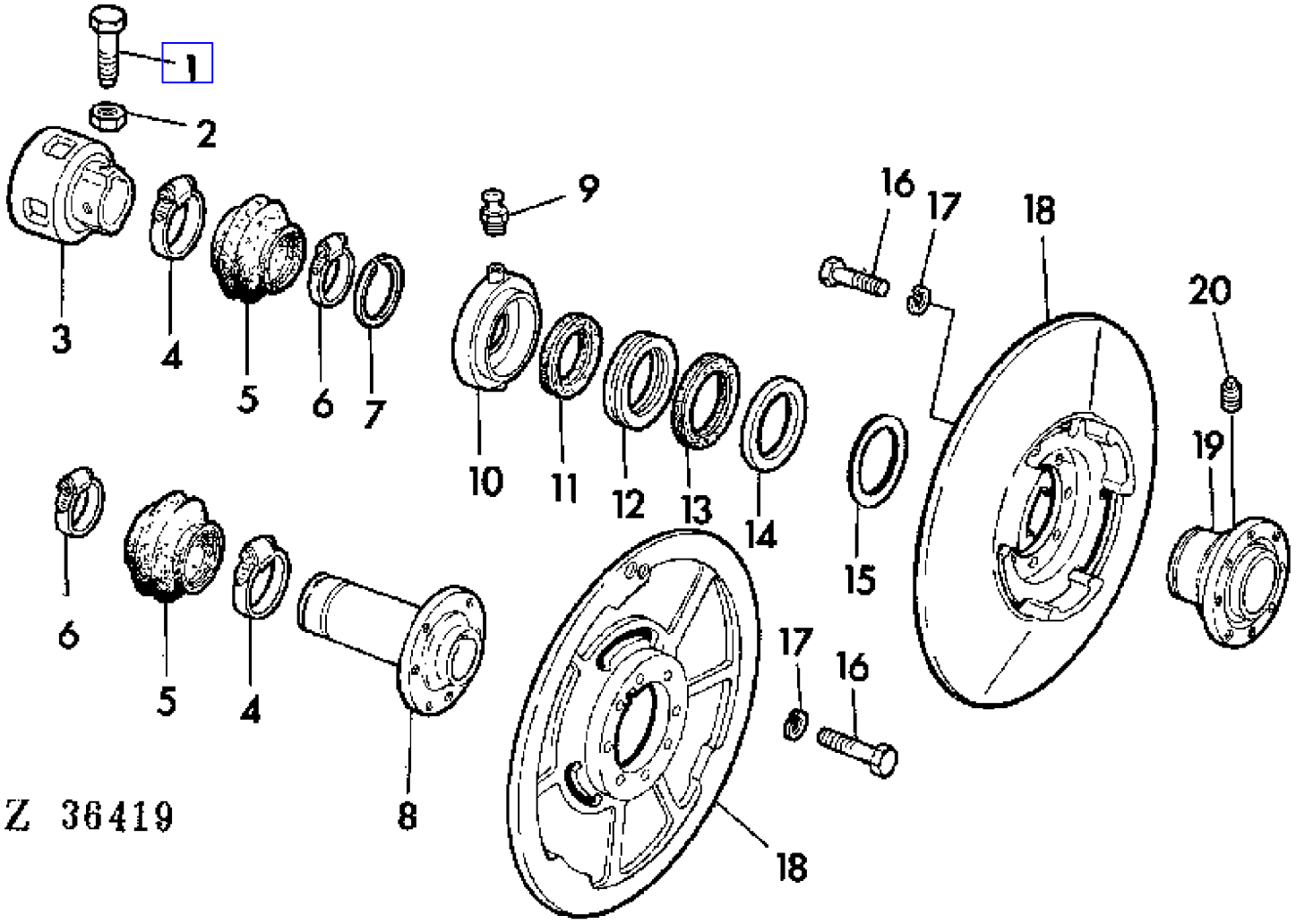

COPYRIGHT©1994 - 2008 DEERE & COMPANY Moline, Illinois All rights reserved

(4A24) VARIABLE CYLINDER SHEAVES
VARIATEUR DU BATTEUR
DRESCHTROMMEL-VARIATOR
VARIATORE DEL BATTITORE
VARIADOR DEL CILINDRO DESGRANADOR
CYLINDERVARIATORSKIVOR

KEY	PART NO.	PART NAME	QTY	SERIAL NO.	975	975HY/4	REMARKS
1	Z32434	SET SCREW	2		X	X	
2	14M7154	NUT	2		X	X	M12
3	Z10741	HUB	1		X	X	
4	Z32207	CLAMP	2		X	X	70 MM
5	Z31034	BOOT	2		X	X	
6	Z32195	CLAMP	2		X	X	84 MM
7	Z32314	SNAP RING	1		X	X	
8	Z10747	HUB	1		X	X	
9	58M7006	LUBRICATION FITTING	1		X	X	8 X 1 MM
10	Z10893	RING	1		X	X	
11	Z33443	FELT	1		X	X	
12	JD33167	THRUST BEARING	1		X	X	
13	Z33444	PACKING	1		X	X	
14	Z29189	WASHER	1		X	X	
15	24M7181	SHIM	1		X	X	100 X 120 X 0,5 MM
16	19M7167	CAP SCREW	AR		X	X	M10 X 25
17	12M7013	LOCK WASHER	AR		X	X	10 MM
18	Z10577	HALF SHEAVE	2		X	X	
19	Z10892	HUB	1		X	X	
20	15M6412	DRAIN PLUG	1		X	X	M12 X 1,5

COPYRIGHT©1994 - 2008 DEERE & COMPANY Moline, Illinois All rights reserved

(4B03) VARIABLE CYLINDER SHEAVES
VARIATEUR DU BATTEUR
WENDETROMMEL-VARIATOR
VARIATORE DEL BATTITORE
VARIADOR DEL BATIDOR
CYLINDERVARIATORSKIVOR

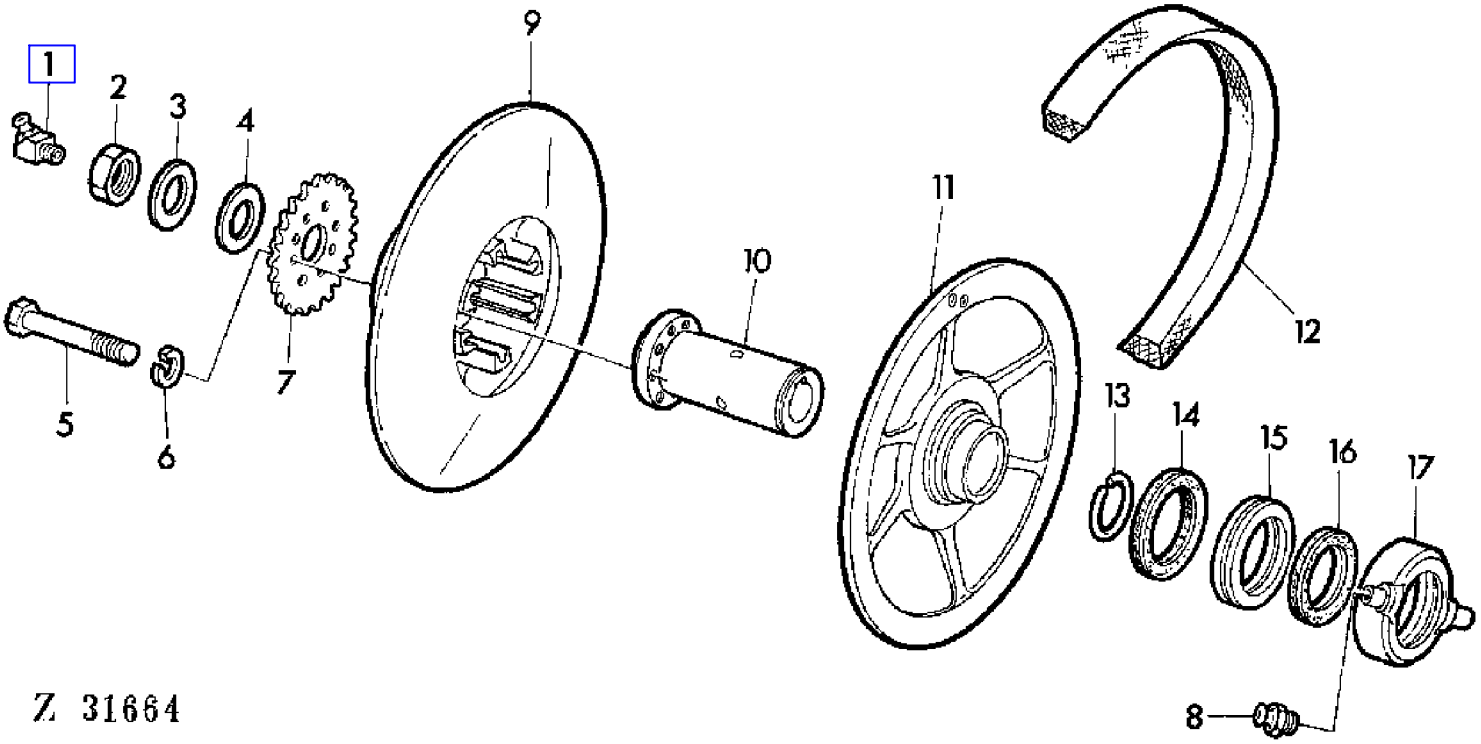

COPYRIGHT©1994 - 2008 DEERE & COMPANY Moline, Illinois All rights reserved

(4B03) VARIABLE CYLINDER SHEAVES
VARIATEUR DU BATTEUR
WENDETROMMEL-VARIATOR
VARIATORE DEL BATTITORE
VARIADOR DEL BATIDOR
CYLINDERVARIATORSKIVOR

KEY	PART NO.	PART NAME	QTY	SERIAL NO.	9 7 5	9 7 5 H Y 4	REMARKS
1	58M7007	LUBRICATION FITTING	1		X	X	8 MM
2	14M7174	LOCK NUT	1		X	X	M24 X 1,5
3	Z30966	WASHER	1		X	X	
4	Z26640	WASHER	AR		X	X	TK = 1 MM
	Z26641	WASHER	AR		X	X	TK = 2 MM
5	19M7287	CAP SCREW	8		X	X	M10 X 50
6	12M7013	LOCK WASHER	8		X	X	10 MM
7	Z10883	CHAIN SPROCKET	1		X	X	Z = 26
8	58M7006	LUBRICATION FITTING	1		X	X	8 X 1 MM
9	Z10890	HALF SHEAVE	1		X	X	
10	Z10746	HUB	1		X	X	
11	Z10891	HALF SHEAVE	1		X	X	
12	Z20823	BELT	1		X	X	
13	Z32314	SNAP RING	1		X	X	
14	Z33444	PACKING	1		X	X	
15	JD33167	THRUST BEARING	1		X	X	
16	Z33443	FELT	1		X	X	
17	Z10893	RING	1		X	X	

COPYRIGHT©1994 - 2008 DEERE & COMPANY Moline, Illinois All rights reserved

(3C18) VENTILATING FAN-STANDARD CAB
VENTILATEUR-CABINE STANDARD
GEBLAESE-STANDARD KABINE
VENTILATORE-CABINA STANDARD
VENTILADOR-CABINA STANDARD
VENTILATIONSFLAKT-STANDARD FORARHYTT

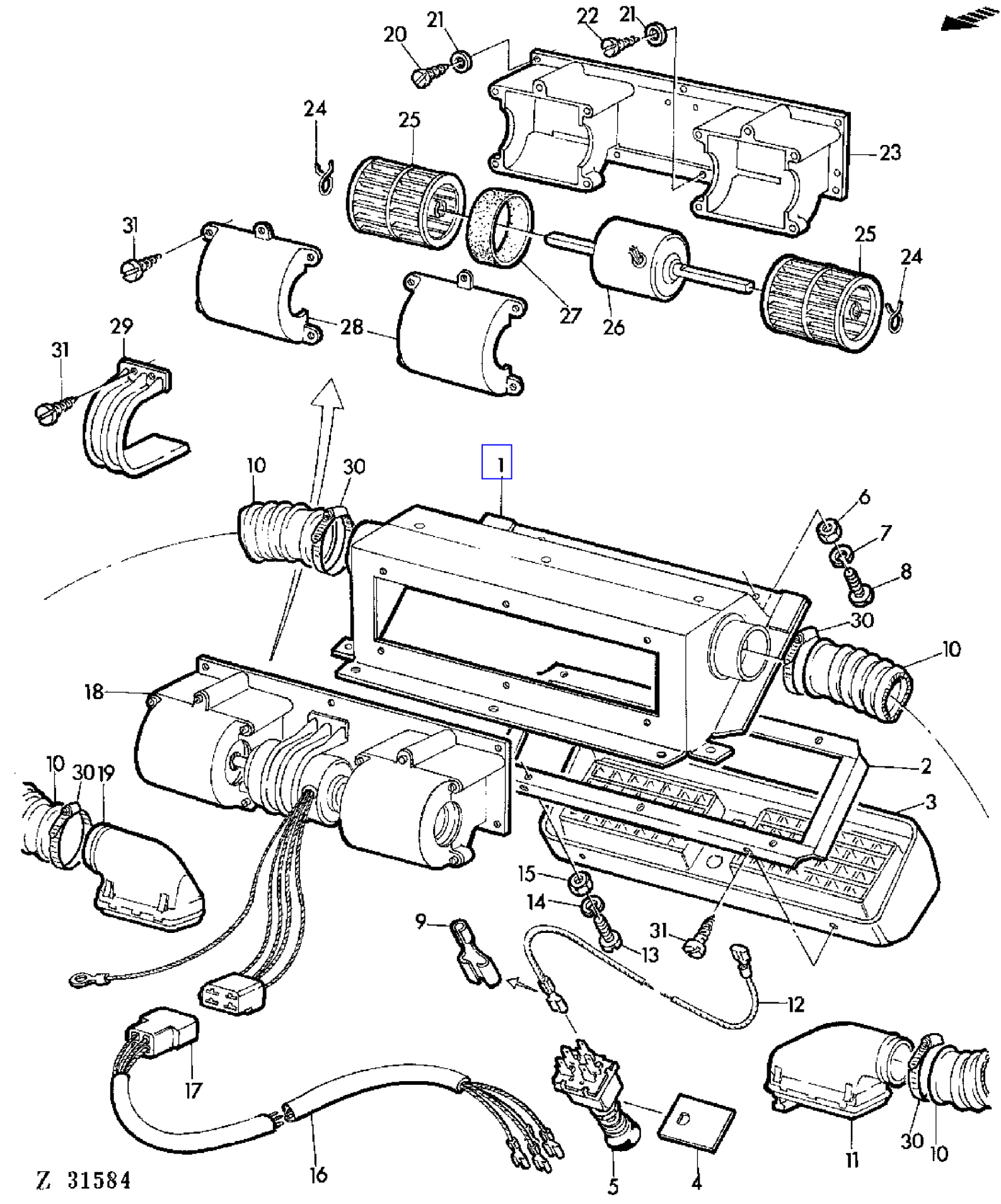

COPYRIGHT©1994 - 2008 DEERE & COMPANY Moline, Illinois All rights reserved

(3C18) VENTILATING FAN-STANDARD CAB
VENTILATEUR-CABINE STANDARD
GEBLAESE-STANDARD KABINE
VENTILATORE-CABINA STANDARD
VENTILADOR-CABINA STANDARD
VENTILATIONSFLAKT-STANDARD FORARHYTT

KEY	PART NO.	PART NAME	QTY	SERIAL NO.	975	975HY/4	REMARKS
1	CA19725	HOUSING	1		X	X	
2	CA19734	FRAME	1		X	X	
3	CA19730	AIR DUCT	1		X	X	
4	CA19733	PLATE	1		X	X	
5	CA19731	SWITCH	1		X	X	
6	14M7027	NUT	8		X	X	M6
7	12M7012	LOCK WASHER	8		X	X	6 MM
8	21M7031	SCREW	8		X	X	M6 X 15
9	CA19728	TERMINAL	AR		X	X	
10	CA19735	HOSE	2		X	X	
11	CA19737	AIR DUCT	1		X	X	LH
12	CA19729	CABLE	1		X	X	INCL KEY 9
13	21M1249	SCREW	6		X	X	M4 X 12
14	12M7031	LOCK WASHER	6		X	X	4 MM
15	14M7139	NUT	6		X	X	M4
16	CA19732	WIRING HARNESS	1		X	X	INCL KEY 17
17	CA19727	LINK	1		X	X	
18	CA19726	MOTOR	1		X	X	ASSY, INCL KEYS 20-31
19	CA19736	AIR DUCT	1		X	X	RH
20	37M7026	SCREW	5		X	X	M4,2 X 9,5
21	24M7117	WASHER	7		X	X	4,3 MM
22	37M7030	SCREW	2		X	X	M4,2 X 25
23	CA19897	MODULE	1		X	X	
24	CA19900	CLAMP	2		X	X	
25	CA19899	FAN	2		X	X	
26	CA19894	MOTOR	1		X	X	
27	CA19895	ENGINE	1		X	X	
28	CA19896	COVER	2		X	X	
29	CA19898	RETAINER	1		X	X	
30	Z34568	CLAMP	4		X	X	
31	37M6835	SCREW	AR		X	X	M5,5 X 13

COPYRIGHT©1994 - 2008 DEERE & COMPANY Moline, Illinois All rights reserved

(1F16) WARNING EMBLEM
PANNEAU D
"D" SCHILD
SEGNO D'AVVISO "D"
PLAQUITA "D"
"D" SKILT

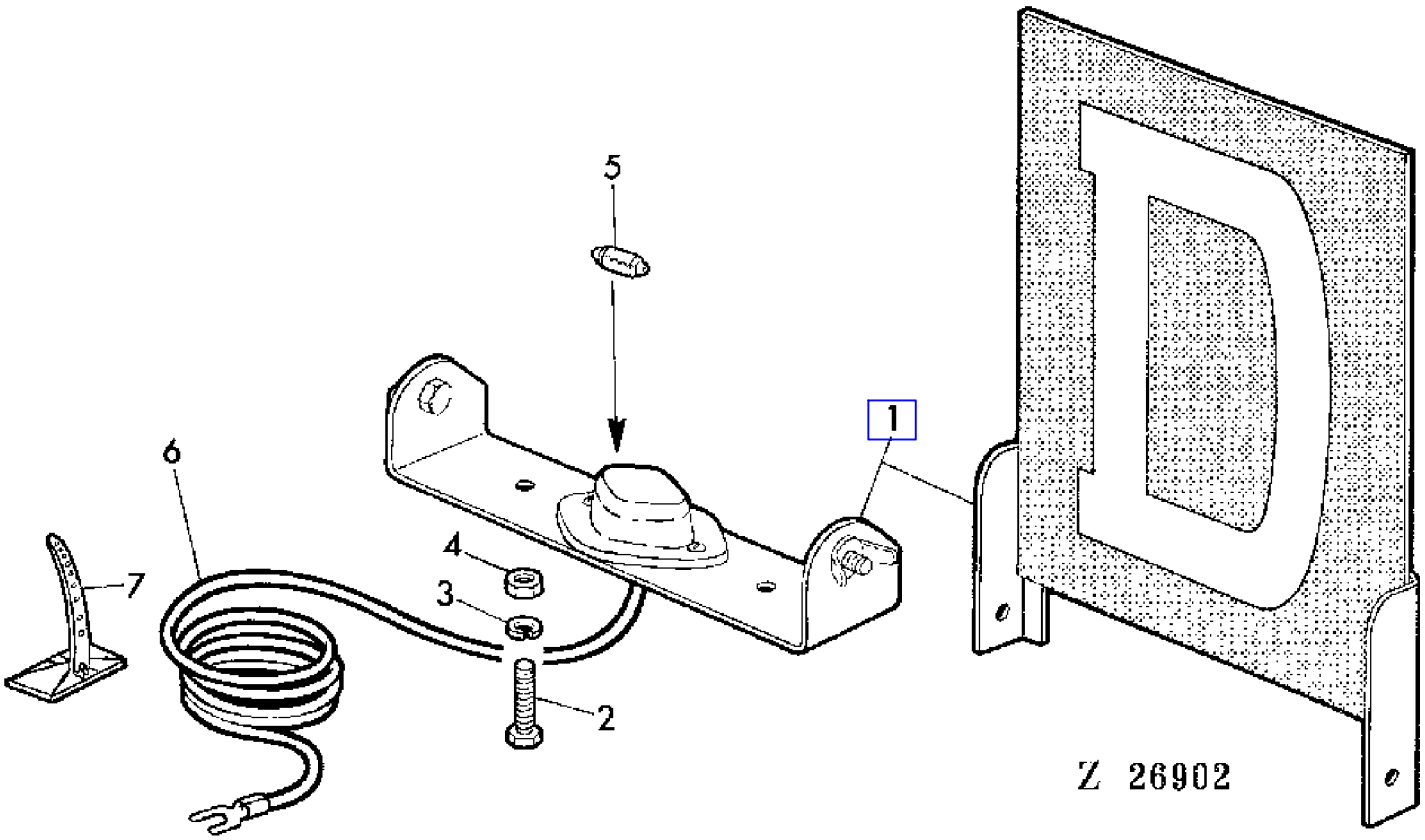

COPYRIGHT©1994 - 2008 DEERE & COMPANY Moline, Illinois All rights reserved

(1F16) WARNING EMBLEM
PANNEAU D
"D" SCHILD
SEGNO D'AVVISO "D"
PLAQUITA "D"
"D" SKILT

KEY	PART NO.	PART NAME	QTY	SERIAL NO.	9 7 5	9 7 5 H Y 4	REMARKS
1	AZ11131	SIGN	1		X	X	ASSY, AR
2	19M7077	CAP SCREW	2		X	X	M6 X 20
3	12M7012	LOCK WASHER	2		X	X	6 MM
4	14M7027	NUT	2		X	X	M6
5	57M6274	BULB	1		X	X	12V 5W
6	AZ23835	WIRING LEAD	1		X	X	
7	Z36647	CLAMP	AR		X	X	

COPYRIGHT©1994 - 2008 DEERE & COMPANY Moline, Illinois All rights reserved

(1B10) WATER PUMP
POMPE A EAU
WASSERPUMPE
POMPA DELL'ACQUA
BOMBA DE AGUA
VATTENPUMP

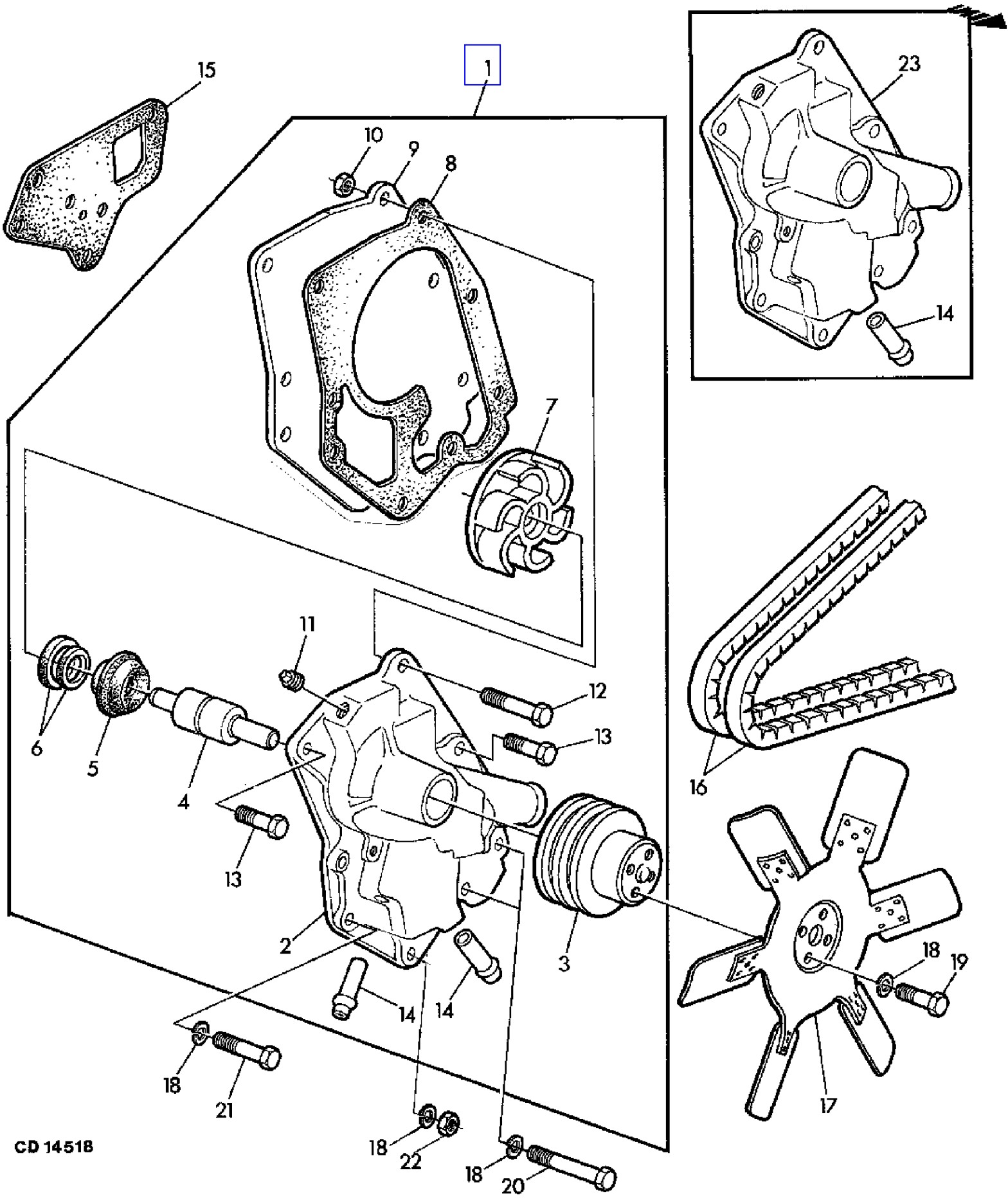

COPYRIGHT©1994 - 2008 DEERE & COMPANY Moline, Illinois All rights reserved

(1B10) WATER PUMP
POMPE A EAU
WASSERPUMPE
POMPA DELL'ACQUA
BOMBA DE AGUA
VATTENPUMP

KEY	PART NO.	PART NAME	QTY	ENGINE SERIAL NO.			975	975HY/4	REMARKS
1	AR74369	WATER PUMP	AR		-	498385	X	X	ASSY (ORD AR97712 W/ AR103054)
	AR97712	WATER PUMP	AR	498386	-	555320	X	X	ASSY
	RE14370	WATER PUMP	AR	555321	-		X	X	ASSY
2	R73606	HOUSING	1	498386	-	555320	X	X	NSEP (ORD AR97712)
	.....	HOUSING	1	555321	-		X	X	NSEP (ORD RE14370)
3	R51963	PULLEY	1				X	X	
4	JD8643	BEARING	1				X	X	NSEP (ORD RE13976)
5	T27261	SEAL	1				X	X	
6	AR41691	INSERT	1				X	X	
7	R40979	IMPELLER	1				X	X	NSEP (ORD RE13976)
8	T25485	GASKET	1				X	X	
9	T25484	COVER	1				X	X	
10	14H255	NUT	1				X	X	3/8"
11	15H584	PIPE PLUG	1				X	X	1/2"
12	19H1726	CAP SCREW	1	494727	-		X	X	3/8" X 2-1/4"
13	19H2545	CAP SCREW	3		-	494726	X	X	3/8" X 1-3/8"
	19H2545	CAP SCREW	2	494727	-		X	X	3/8" X 1-3/8"
14	R48993	TUBE	2		-	555320	X	X	
	R34985	LINE	2	555321	-		X	X	
15	T20243	GASKET	1				X	X	
16	AT24833	BELT SET	1		-	389082	X		KIT (2)
	AR72036	BELT SET	1	389083	-		X		KIT (2)
	H79235	BELT	1					X	
17	AT58891	FAN	1				X		(SUB FOR AU43804)
18	12H304	LOCK WASHER	8				X		3/8"
	12H304	LOCK WASHER	4					X	3/8"
19	19H1800	CAP SCREW	4				X		3/8" X 1-1/2"
20	19H1912	CAP SCREW	2	498386	-		X	X	3/8" X 3-1/2"
21	19H1801	CAP SCREW	3		-	498385	X	X	3/8" X 2"
	19H1801	CAP SCREW	1	498386	-		X	X	3/8" X 2"
22	14H1076	NUT	1				X	X	3/8"
23	R61353	HOUSING	1		-	498385	X	X	NSEP (ORD AR97712 W/ AR103054)
..	RE13976	KIT	AR				X	X	KIT, INCL KEYS 4-8,15

COPYRIGHT©1994 - 2008 DEERE & COMPANY Moline, Illinois All rights reserved

(1D12) WATER TRAP
DECANTEUR
WASSERABSCHEIDER
SEPARATORE D'ACQUA
SEPARADOR DE AGUA
VATTENAVSKILJARE

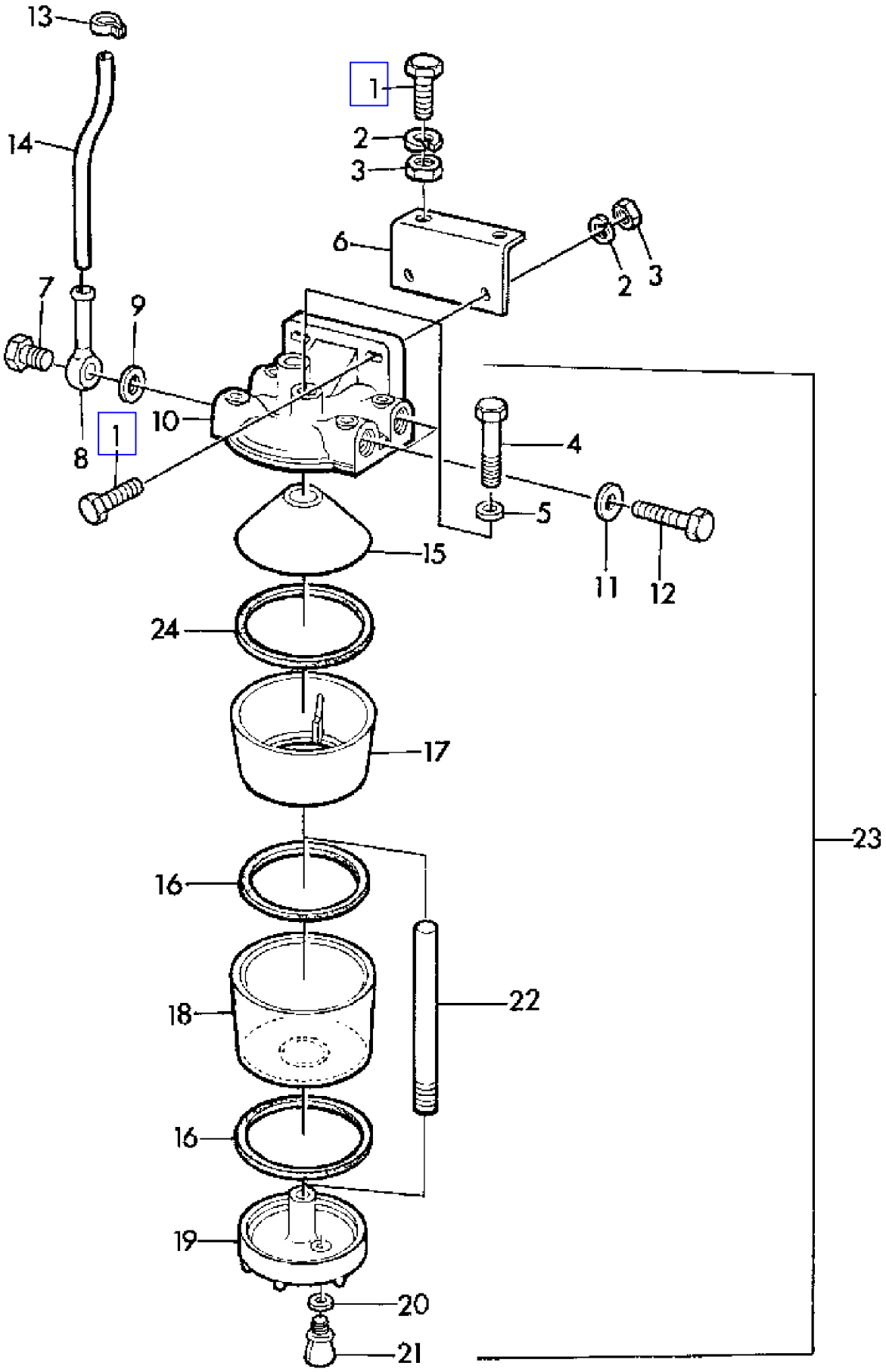

Z 36347

COPYRIGHT©1994 - 2008 DEERE & COMPANY Moline, Illinois All rights reserved

(1D12) WATER TRAP
DECANTEUR
WASSERABSCHEIDER
SEPARATORE D'ACQUA
SEPARADOR DE AGUA
VATTENAVSKILJARE

KEY	PART NO.	PART NAME	QTY	SERIAL NO.	975	975HY/4	REMARKS
1	19M7298	CAP SCREW	4		X	X	M8 X 35
2	12M7008	LOCK WASHER	4		X	X	8 MM
3	14M7029	NUT	4		X	X	M8
4	CD13188	CAP SCREW	1		X	X	
5	CD13189	WASHER	1		X	X	
6	Z34676	HOLDER	1		X	X	
7	CD13182	HOLLOW SCREW	2		X	X	
8	Z34673	FITTING	2		X	X	
9	T24608	WASHER	2		X	X	
10	CD13179	COVER	1		X	X	
11	CD13181	WASHER	2		X	X	
12	CD13180	FITTING PLUG	2		X	X	
13	Z22560	CLAMP	2		X	X	
14	Z34675	HOSE	1		X	X	
15	CD13184	FILTER	1		X	X	
16	T19114	GASKET	2		X	X	
17	CD13183	WATER TRAP	1		X	X	
18	CD13185	SEDIMENT BOWL	1		X	X	
19	CD13186	BOTTOM	1		X	X	
20	CD13191	WASHER	1		X	X	
21	CD13190	DRAIN PLUG	1		X	X	
22	CD13187	STUD	1		X	X	
23	DD11218	WATER TRAP	1		X	X	ASSY, INCL KEYS 4,5,7,9-12,15-22
24	R75867	GASKET	1		X	X	UP (SUB FOR T19114 APPL)

COPYRIGHT©1994 - 2008 DEERE & COMPANY Moline, Illinois All rights reserved

(3B24) WINDSHIELD WIPER
ESSUIE-GLACES
SCHEIBENWISCHER
TERGICRISTALLO
LIMPIAPARABRISAS
VINDRUTETORKARE

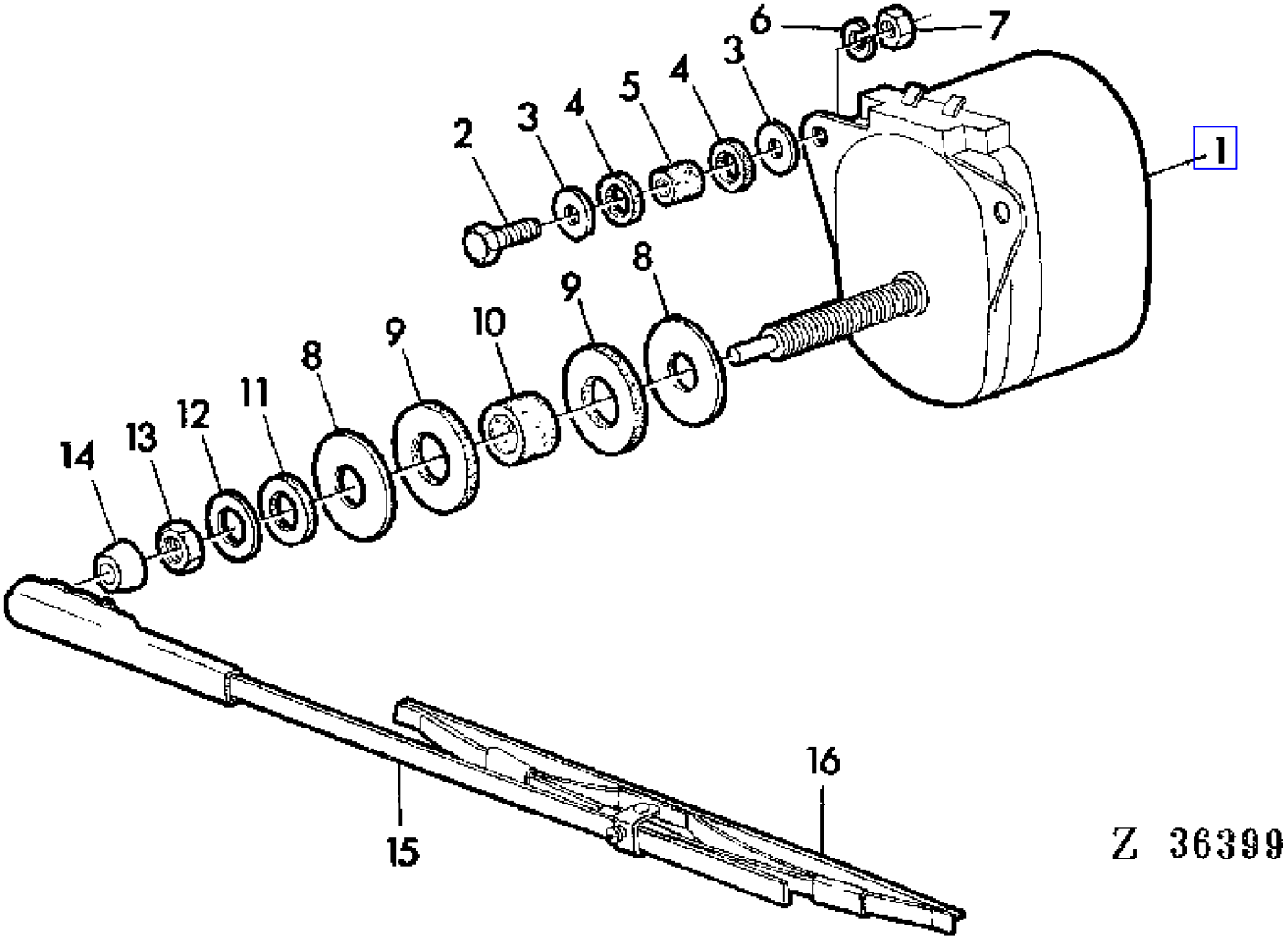

COPYRIGHT©1994 - 2008 DEERE & COMPANY Moline, Illinois All rights reserved

(3B24) WINDSHIELD WIPER
ESSUIE-GLACES
SCHEIBENWISCHER
TERGICRISTALLO
LIMPIAPARABRISAS
VINDRUTETORKARE

KEY	PART NO.	PART NAME	QTY	SERIAL NO.	975	975HY/4	REMARKS
1	DA19493	MOTOR	2		X	X	INCL KEYS 11-14
2	19M7298	CAP SCREW	4		X	X	M8 X 35
3	CA19721	WASHER	8		X	X	
4	CA19589	SEAL	8		X	X	
5	CA19590	BUSHING	4		X	X	
6	12M7008	LOCK WASHER	4		X	X	8MM
7	14M7029	NUT	4		X	X	M8
8	CA19586	WASHER	4		X	X	
9	CA19587	SEAL	4		X	X	
10	CA19588	BUSHING	2		X	X	
11	CA19827	WASHER	2		X	X	
12	CA19828	DEFLECTOR	2		X	X	
13	CA19829	NUT	2		X	X	
14	CA19830	GUARD	2		X	X	
15	DA19489	ARM	1		X	X	UP
	DA19494	ARM	1		X	X	LOW
16	CA16485	WINDSHIELD WIPER	1		X	X	UP
	CA19495	WIPER BLADE	1		X	X	LOW

COPYRIGHT©1994 - 2008 DEERE & COMPANY Moline, Illinois All rights reserved

(1E24) WIRING HARNESS (DASH-DISCONNECT PLUG)
FAISCEAU (JONCTION TABLEAU DE BORD)
KABELBAUM (ARMATURENKASTEN-TRENNSTELLE)
CAVO (CRUSCOTTO-PRESA DI DISINNESTO)
HAZ DE CABLES (CONSOLA DE INSTRUMENTOS-JUNTURA)
KABELHARVA (INSTRUMENTPANEL-FORDELARE)

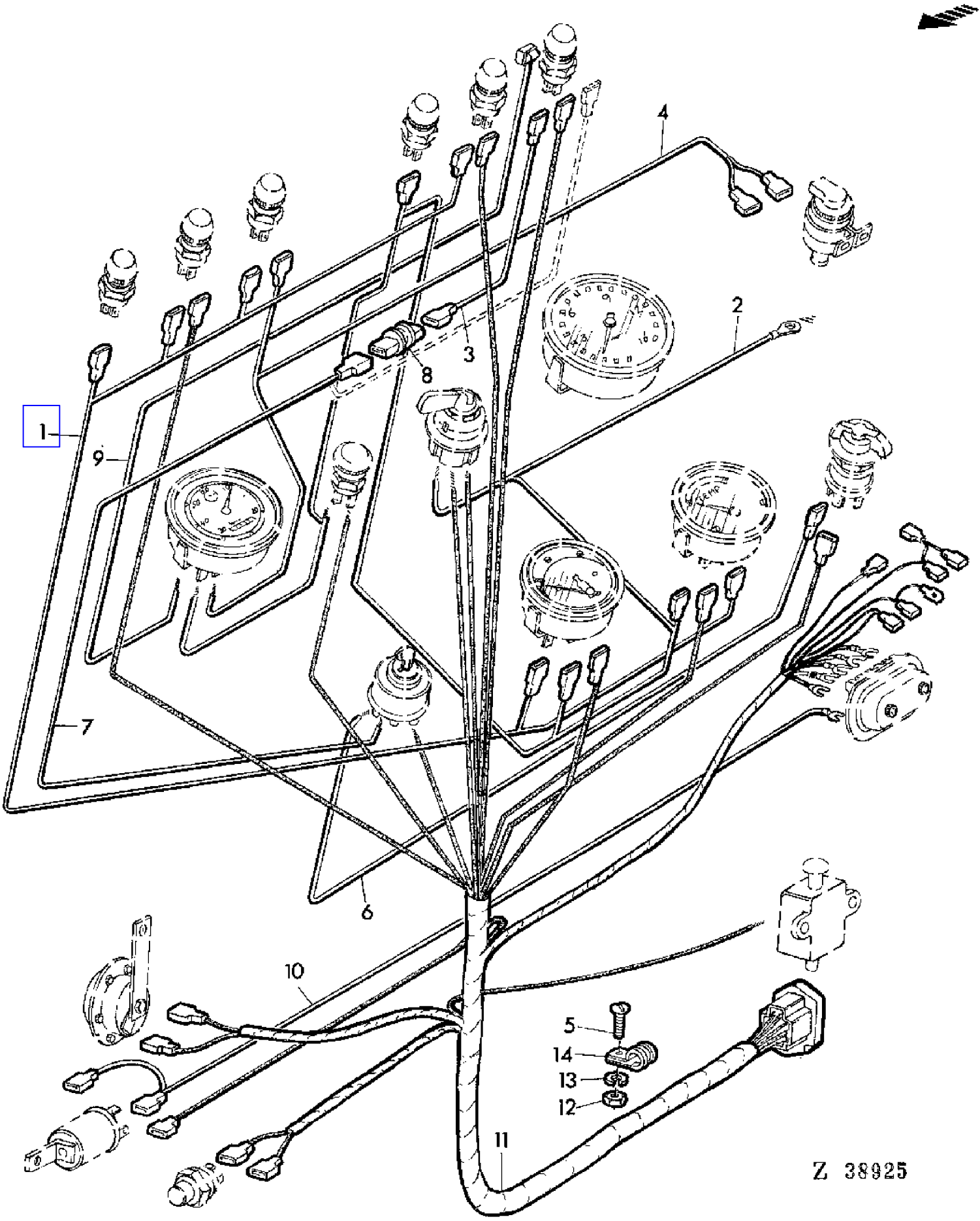

COPYRIGHT©1994 - 2008 DEERE & COMPANY Moline, Illinois All rights reserved

(1E24) WIRING HARNESS (DASH-DISCONNECT PLUG)
FAISCEAU (JONCTION TABLEAU DE BORD)
KABELBAUM (ARMATURENKASTEN-TRENNSTELLE)
CAVO (CRUSCOTTO-PRESA DI DISINNESTO)
HAZ DE CABLES (CONSOLA DE INSTRUMENTOS-JUNTURA)
KABELHARVA (INSTRUMENTPANEL-FORDELARE)

KEY	PART NO.	PART NAME	QTY	SERIAL NO.	975	975HY	REMARKS
1	AZ23581	WIRING HARNESS	1		X	X	
2	AZ23583	WIRING HARNESS	1		X	X	
3	AZ23591	WIRING LEAD	1		X	X	
4	AZ23577	WIRING HARNESS	1		X	X	
5	21M7031	SCREW	AR		X	X	M6 X 15
6	AZ23578	WIRING LEAD	1		X	X	
7	AZ23582	WIRING LEAD	1		X	X	
8	AZ23107	DIODE	1		X	X	
9	AZ23580	WIRING LEAD	1		X	X	
10	AZ27005	WIRING HARNESS	1		X	X	
11	AZ23592	WIRING HARNESS	1	- 015897	X		
	AZ25914	WIRING HARNESS	1	015898 - 017017	X		
	AZ27003	WIRING HARNESS	1	017018 -	X		ASSY
	AZ27004	WIRING HARNESS	1			X	ASSY
12	14M7027	NUT	AR		X	X	M6
13	12M7012	LOCK WASHER	AR		X	X	6 MM
14	Z22071	CLAMP	AR		X	X	

COPYRIGHT©1994 - 2008 DEERE & COMPANY Moline, Illinois All rights reserved

(1F18) WORK LIGHT
PHARE DE TRAVAIL
ARBEITSSCHEINWERFER
LUCE DI LAVORO
FARO AUXILIAR
ARBETSLJUS

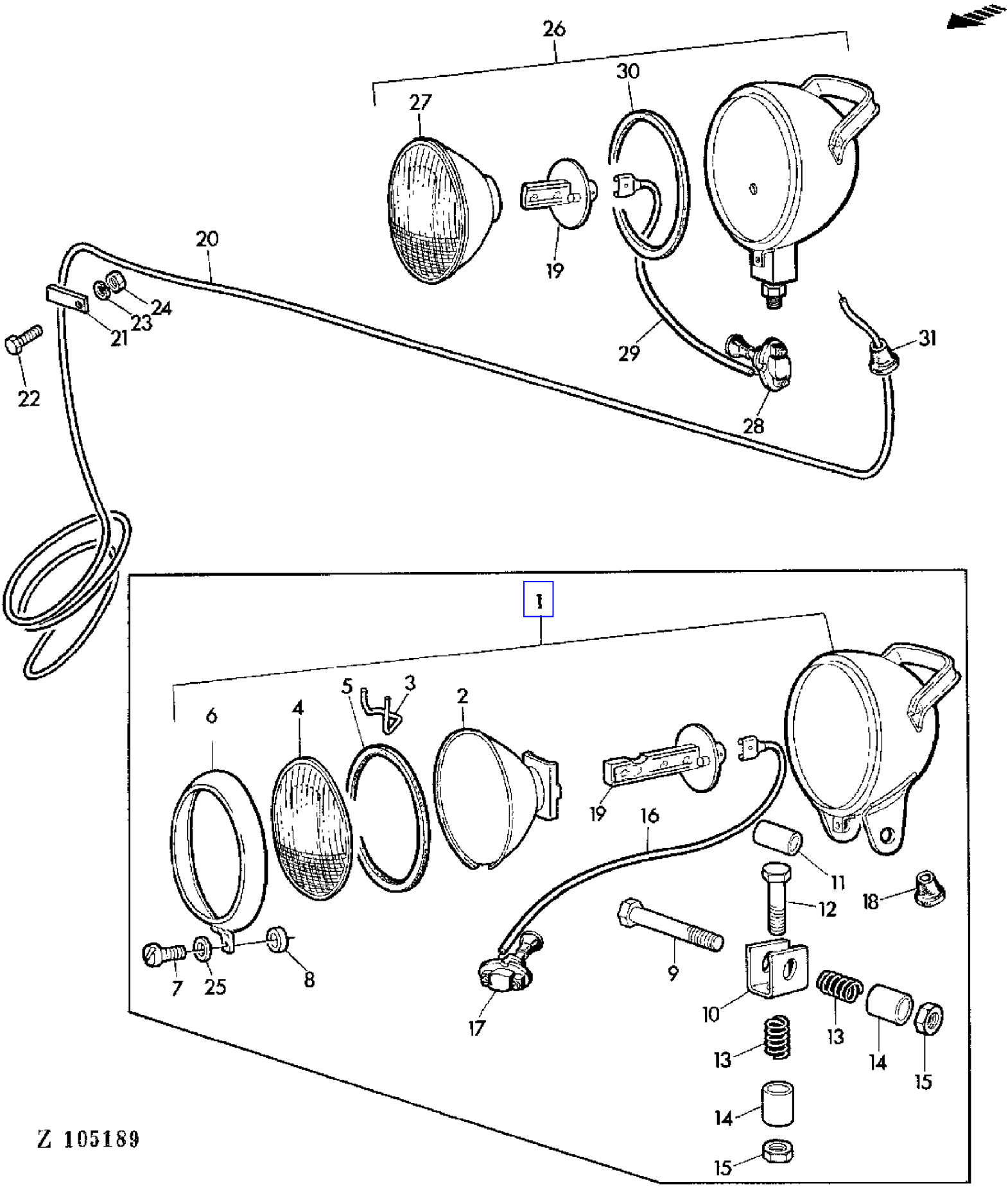

COPYRIGHT©1994 - 2008 DEERE & COMPANY Moline, Illinois All rights reserved

(1F18) WORK LIGHT
PHARE DE TRAVAIL
ARBEITSSCHEINWERFER
LUCE DI LAVORO
FARO AUXILIAR
ARBETSLJUS

KEY	PART NO.	PART NAME	QTY	SERIAL NO.	975	975HY/4	REMARKS
1	AZ15671	FLOODLAMP	1		X		ASSY (ORD AL29611)
2	AZ16166	REFLECTOR	1		X		
3	Z27383	SPRING	4		X		
4	Z27381	LENS	1		X		
5	Z27382	GASKET	1		X		
6	AZ16165	BEZEL	1		X		
7	L13558	SCREW	1		X		5 X 12 MM
8	L13560	WASHER	1		X		
9	19M7328	CAP SCREW	1		X		M10 X 70
10	.....	CHANNEL	1		X		NSEP
11	.....	BUSHING	1		X		NSEP
12	19M7183	CAP SCREW	1		X		M10 X 40
13	.....	SPRING	2		X		NSEP
14	.....	BUSHING	2		X		NSEP
15	14M7167	LOCK NUT	2		X		M10
16	Z21990	WIRING LEAD	1		X		
17	AZ16167	SWITCH	1		X		
18	Z27384	GROMMET	1		X		
19	Z26998	BULB	1		X	X	
20	AZ16537	WIRING LEAD	1		X	X	(SUB FOR AZ12750)
21	Z23521	CLAMP	3		X	X	
22	19M7159	CAP SCREW	3		X	X	M6 X 15
23	12M7012	LOCK WASHER	3		X	X	6 MM
24	14M7027	NUT	3		X	X	M6
25	L13559	WASHER	1		X		
26	AL29611	FLOODLAMP	1		X	X	ASSY, INCL KEYS 27,28,30,31
27	AL29614	LAMP	1		X	X	
28	AL29615	SWITCH	1		X	X	
29	AT24696	CABLE	1		X	X	
30	L33463	BEZEL	1		X	X	
31	Z37882	GROMMET	1		X	X	

COPYRIGHT©1994 - 2008 DEERE & COMPANY Moline, Illinois All rights reserved